AUTHENTICATED
U.S. GOVERNMENT
INFORMATION
GPO

SUBCHAPTER N—EFFLUENT GUIDELINES AND STANDARDS

PART 425—LEATHER TANNING AND FINISHING POINT SOURCE CATEGORY

GENERAL PROVISIONS

Sec.
425.01 Applicability.
425.02 General definitions.
425.03 Sulfide analytical methods and applicability.
425.04 Applicability of sulfide pretreatment standards.
425.05 Compliance dates.
425.06 Monitoring requirements.

Subpart A—Hair Pulp, Chrome Tan, Retan-Wet Finish Subcategory

425.10 Applicability; description of the hair pulp, chrome tan, retan-wet finish subcategory.
425.11 Effluent limitations representing the degree of effluent reduction attainable by the application of the best practicable control technology currently available (BPT).
425.12 Effluent limitations representing the degree of effluent reduction attainable by the application of the best conventional pollutant control technology (BCT).
425.13 Effluent limitations representing the degree of effluent reduction attainable by the application of the best available technology economically achievable (BAT).
425.14 New source performance standards (NSPS).
425.15 Pretreatment standards for existing sources (PSES).
425.16 Pretreatment standards for new sources (PSNS).

Subpart B—Hair Save, Chrome Tan, Retan-Wet Finish Subcategory

425.20 Applicability; description of the hair save, chrome tan, retan-wet finish subcategory.
425.21 Effluent limitations representing the degree of effluent reduction attainable by the application of the best practicable control technology currently available (BPT).
425.22 Effluent limitations representing the degree of effluent reduction attainable by the application of the best conventional pollutant control technology (BCT).
425.23 Effluent limitations representing the degree of effluent reduction attainable by the application of the best available technology economically achievable (BAT).
425.24 New source performance standards (NSPS).
425.25 Pretreatment standards for existing sources (PSES).
425.26 Pretreatment standards for new sources (PSNS).

Subpart C—Hair Save or Pulp, Non-Chrome Tan, Retan-Wet Finish Subcategory

425.30 Applicability; description of the hair save or pulp, non-chrome tan, retan-wet finish subcategory.
425.31 Effluent limitations representing the degree of effluent reduction attainable by the application of the best practicable control technology currently available (BPT).
425.32 Effluent limitations representing the degree of effluent reduction attainable by the application of the best conventional pollutant control technology (BCT).
425.33 Effluent limitations representing the degree of effluent reduction attainable by the application of the best available technology economically achievable (BAT).
425.34 New source performance standards (NSPS).
425.35 Pretreatment standards for existing sources (PSES).
425.36 Pretreatment standards for new sources (PSNS).

Subpart D—Retan-Wet Finish-Sides Subcategory

425.40 Applicability; description of the retan-wet finish-sides subcategory.
425.41 Effluent limitations representing the degree of effluent reduction attainable by the application of the best practicable control technology currently available (BPT).
425.42 Effluent limitations representing the degree of effluent reduction attainable by the application of the best conventional pollutant control technology (BCT).
425.43 Effluent limitations representing the degree of effluent reduction attainable by the application of the best available technology economically achievable (BAT).
425.44 New source performance standards (NSPS).
425.45 Pretreatment standards for existing sources (PSES).

425.46 Pretreatment standards for new sources (PSNS).

Subpart E—No Beamhouse Subcategory

425.50 Applicability; description of the no beamhouse subcategory.
425.51 Effluent limitations representing the degree of effluent reduction attainable by the application of the best practicable control technology currently available (BPT).
425.52 Effluent limitations representing the degree of effluent reduction attainable by the application of the best conventional pollutant control technology (BCT).
425.53 Effluent limitations representing the degree of effluent reduction attainable by the application of the best available technology economically achievable (BAT).
425.54 New source performance standards (NSPS).
425.55 Pretreatment standards for existing sources (PSES).
425.56 Pretreatment standards for new sources (PSNS).

Subpart F—Through-the-Blue Subcategory

425.60 Applicability; description of the through-the-blue subcategory.
425.61 Effluent limitations representing the degree of effluent reduction attainable by the application of the best practicable control technology currently available (BPT).
425.62 Effluent limitations representing the degree of effluent reduction attainable by the application of the best conventional pollutant control technology (BCT).
425.63 Effluent limitations representing the degree of effluent reduction attainable by the application of the best available technology economically achievable (BAT).
425.64 New source performance standards (NSPS).
425.65 Pretreatment standards for existing sources (PSES).
425.66 Pretreatment standards for new sources (PSNS).

Subpart G—Shearling Subcategory

425.70 Applicability; description of the shearling subcategory.
425.71 Effluent limitations representing the degree of effluent reduction attainable by the application of the best practicable control technology currently available (BPT).
425.72 Effluent limitations representing the degree of effluent reduction attainable by the application of the best conventional pollutant control technology (BCT).
425.73 Effluent limitations representing the degree of effluent reduction attainable by the application of the best available technology economically achievable (BAT).
425.74 New source performance standards (NSPS).
425.75 Pretreatment standards for existing sources (PSES).
425.76 Pretreatment standards for new sources (PSNS).

Subpart H—Pigskin Subcategory

425.80 Applicability; description of the pigskin subcategory.
425.81 Effluent limitations representing the degree of effluent reduction attainable by the application of the best practicable control technology currently available (BPT).
425.82 Effluent limitations representing the degree of effluent reduction attainable by the application of the best conventional pollutant control technology (BCT).
425.83 Effluent limitations representing the degree of effluent reduction attainable by the application of the best available technology economically achievable (BAT).
425.84 New source performance standards (NSPS).
425.85 Pretreatment standards for existing sources (PSES).
425.86 Pretreatment standards for new sources (PSNS).

Subpart I—Retan-Wet Finish-Splits Subcategory

425.90 Applicability; description of the retan-wet finish-splits subcategory.
425.91 Effluent limitations representing the degree of effluent reduction attainable by the application of the best practicable control technology currently available (BPT).
425.92 Effluent limitations representing the degree of effluent reduction attainable by the application of the best conventional pollutant control technology (BCT).
425.93 Effluent limitations representing the degree of effluent reduction attainable by the application of the best available technology economically achievable (BAT).
425.94 New source performance standards (NSPS).
425.95 Pretreatment standards for existing sources (PSES).
425.96 Pretreatment standards for new sources (PSNS).

APPENDIX A TO PART 425—POTASSIUM FERRICYANIDE TITRATION METHOD
APPENDIX B TO PART 425—MODIFIED MONIER-WILLIAMS METHOD
APPENDIX C TO PART 425—DEFINITION AND PROCEDURE FOR THE DETERMINATION OF THE METHOD DETECTION LIMIT

AUTHORITY: 33 U.S.C. 1311, 1314 (b), (c), (e) and (g), 1316 (b) and (c), 1317 (b) and (c), 1318 and 1361.

SOURCE: 47 FR 52870, Nov. 23, 1982, unless otherwise noted.

GENERAL PROVISIONS

§ 425.01 Applicability.

This part applies to any leather tanning and finishing facility which discharges or may discharge process wastewater pollutants to the waters of the United States, or which introduces or may introduce process wastewater pollutants into a publicly owned treatment works.

§ 425.02 General definitions.

In addition to the definitions set forth in 40 CFR part 401, the following definitions apply to this part:

(a) ''Sulfide'' shall mean total sulfide as measured by the potassium ferricyanide titration method described in Appendix A or the modified Monier-Williams method described in Appendix B.

(b) ''Hide'' means any animal pelt or skin as received by a tannery as raw material to be processed.

(c) ''Retan-wet finish'' means the final processing steps performed on a tanned hide including, but not limited to, the following wet processes: retan, bleach, color, and fatliquor.

(d) ''Hair pulp'' means the removal of hair by chemical dissolution.

(e) ''Hair save'' means the physical or mechanical removal of hair which has not been chemically dissolved, and either selling the hair as a by-product or disposing of it as a solid waste.

(f) ''Chrome tan'' means the process of converting hide into leather using a form of chromium.

(g) ''Vegetable tan'' means the process of converting hides into leather using chemicals either derived from vegetable matter or synthesized to produce effects similar to those chemicals.

(h) ''Raw material'' means the hides received by the tannery except for facilities covered by subpart D and subpart I where ''raw material'' means the hide or split in the condition in which it is first placed into a wet process.

(i) ''Monthly average'' means the arithmetic average of eight (8) individual data points from effluent sampling and analysis during any calendar month.

(j) ''Interference'' means the discharge of sulfides in quantities which can result in human health hazards and/or risks to human life, and an inhibition or disruption of POTW as defined in 40 CFR 403.3(i).

[47 FR 52870, Nov. 23, 1982, as amended at 53 FR 9181, Mar. 21, 1988]

§ 425.03 Sulfide analytical methods and applicability.

(a) The potassium ferricyanide titration method described in appendix A to part 425 shall be used whenever practicable for the determination of sulfide in wastewaters discharged by plants operating in all subcategories except the hair save or pulp, non-chrome tan, retan-wet finish subcategory (subpart C, *see* § 425.30). In all other cases, the modified Monier-Williams method as described in appendix B to part 425 shall be used as an alternative to the potassium ferricyanide titration method for the determination of sulfide in wastewaters discharged by plants operating in all subcategories except subpart C.

(b) The modified Monier-Williams method as described in appendix B to part 425 shall be used for the determination of sulfide in wastewaters discharged by plants operating in the hair save or pulp, non-chrome tan, retan-wet finish subcategory (subpart C, *see* § 425.30).

[53 FR 9181, Mar. 21, 1988]

§ 425.04 Applicability of sulfide pretreatment standards.

(a) A POTW receiving wastewater from a facility subject to this part may require more stringent pretreatment standards for sulfide than those established by this part without EPA approval.

(b) The pretreatment standards for sulfide established by this part will not

apply if the POTW receiving wastewater from a facility subject to this part certifies in writing with explanation of relevant factors considered, in accordance with the provisions of paragraph (c) of this section, that the discharge of sulfide from the facility does not interfere with the operation of the POTW. In making this determination, the POTW shall consider all relevant factors including but not limited to the following:

(1) The presence and characteristics, of other industrial wastewaters which can increase or decrease sulfide concentrations, pH, or both.

(2) The characteristics of the sewer/interceptor collection system which either minimize or enhance opportunities for release of hydrogen sulfide gas.

(3) The characteristics of the receiving POTWs headworks, preliminary and primary treatment systems, and sludge holding and dewatering facilities which either minimize or enhance opportunities for release of hydrogen sulfide gas.

(4) The occurrence of any prior sulfide related interference as defined in § 425.02(j).

(c)(1) On October 13, 1983, a POTW which intends to certify that the sulfide pretreatment standard should not apply must publish, in a local newspaper with the largest circulation, a notice that presents the findings supporting this determination consistent with paragraph (a) of this section. Allowance for public hearing of these findings also must be provided. The POTW shall identify all existing facilities to which the sulfide pretreatment standard otherwise established by this part would not apply.

(2) On January 11, 1984, a POTW which intends to certify that the sulfide pretreatment standard should not apply must file a written certification with the Regional Water Management Division Director, Environmental Protection Agency, in the appropriate Regional Office. This certification shall include the findings supporting this determination and the results of public comments, and public hearing(s) if held.

(3) On February 10, 1984, EPA shall acknowledge to the POTW receipt of any certification submitted under paragraphs (c) (1) and (2) of this section, and shall indicate to the POTW the adequacy of the submission based upon a review of the factors set forth in paragraph (b) of this section.

(4) Within 30 days of the date of receipt of adequate submissions under paragraphs (c) (1), (2), and (3) of this section, EPA shall publish a notice in the FEDERAL REGISTER identifying those facilities to which the sulfide pretreatment standards of this part shall not apply.

(5) A POTW may certify that the sulfide pretreatment standards of this part should not apply to a new source planning to discharge into the POTW. This certification must be submitted prior to the commencement of discharge, and must conform at a minimum with criteria in paragraph (b) of this section and the general procedures and intervals of time contained in paragraphs (c) (1), (2), (3), and (4) of this section.

(d)(1) If, after EPA and the POTW have determined in accordance with this section that the sulfide pretreatment standards of this part are not applicable to specified facilities, a POTW then determines that there have been changed circumstances (including but not limited to changes in the factors specified in paragraph (b) of this section) which justify application of the sulfide pretreatment standards, the POTW shall revoke the certification submitted under paragraph (c) of this section. The POTW and EPA shall then adhere to the general procedures and time intervals contained in paragraph (c) of this section in order to determine whether the sulfide pretreatment standards contained in this part are applicable.

(2) If pursuant to paragraph (d)(1) of this section, the sulfide pretreatment standards of this part are applicable to a specified facility, the indirect discharger shall comply with the sulfide pretreatment standards no later than 18 months from the date of publication of the FEDERAL REGISTER notice identifying the facility.

(e) At any time after October 13, 1983, if a POTW determines that there have been changed circumstances (including but not limited to changes in the factors specified in paragraph (b) of this

section), it may initiate proceedings contained in paragraph (c) of this section to determine that the sulfide pretreatment standards of this part shall not be applicable. The POTW and EPA shall follow the procedures and time intervals contained in paragraph (c) of this section to make this determination. A final determination that the sulfide pretreatment standards are not applicable must be made prior to the discharge of sulfide not in accordance with the standards set forth in this part.

(The information collection and reporting requirements contained in paragraphs (b) and (c) were approved by the Office of Management and Budget under control number 2040–0032)

[47 FR 52870, Nov. 23, 1982; 48 FR 30117, June 30, 1983, as amended at 48 FR 31404, July 8, 1983; 48 FR 32346, July 15, 1983; 48 FR 35649, Aug. 5, 1983; 53 FR 9181, Mar. 21, 1988]

§ 425.05 Compliance dates.

The compliance date for new source performance standards (NSPS) and pretreatment standards for new sources (PSES) is the date the new source commences discharge. The compliance date for BPT effluent limitations and guidelines and pretreatment standards for existing sources to no later than March 31, 1989.

[53 FR 9182, Mar. 21, 1988]

§ 425.06 Monitoring requirements.

Compliance with monthly average discharge limitations is required regardless of the number of samples analyzed and averaged.

Subpart A—Hair Pulp, Chrome Tan, Retan-Wet Finish Subcategory

§ 425.10 Applicability; description of the hair pulp, chrome tan, retan-wet finishing subcategory.

The provisions of this subpart are applicable to process wastewater discharges resulting from any tannery which, either exclusively or in addition to other unhairing and tanning operation, processes raw or cured cattle or cattle-like hides into finished leather by chemically dissolving the hide hair, chrome tanning, and retan-wet finishing.

§ 425.11 Effluent limitations representing the degree of effluent reduction attainable by the application of the best practicable control technology currently available (BPT).

Except as provided in 40 CFR 125.30 through 125.32, any existing point source subject to this subpart must achieve the following effluent limitations representing the degree of effluent reduction attainable by the application of the best practicable control technology currently available (BPT):

Pollutant or pollutant property	BPT limitations	
	Maximum for any 1 day	Maximum for monthly average
	kg/kkg (or pounds per 1,000 pounds of raw material	
BOD5	9.3	4.2
TSS	13.4	6.1
Oil & Grease	3.9	1.7
Total Chromium	0.24	0.09
pH	(1)	(1)

[1] Within the range of 6.0 to 9.0

[53 FR 9182, Mar. 21, 1988]

§ 425.12 Effluent limitations representing the degree of effluent reduction attainable by the application of the best conventional pollutant control technology (BCT).

Except as provided in 40 CFR 125.30 through 125.32, any existing point source subject to this subpart must achieve the following effluent limitations representing the degree of effluent reduction attainable by the application of the best conventional pollutant control technology (BCT): The effluent limitations are those for BOD5, TSS, Oil and Grease, and pH contained in § 425.11.

§ 425.13 Effluent limitations representing the degree of effluent reduction attainable by the application of the best available technology economically achievable (BAT).

Except as provided in 40 CFR 125.30 through 125.32, any existing point source subject to this subpart must

achieve the following effluent limitations representing the degree of effluent reduction attainable by the application of the best available technology economically achievable (BAT): The effluent limitations are those for Total Chromium contained in § 425.11.

§ 425.14 New source performance standards (NSPS).

Any new source subject to this subpart must achieve the following new source performance standards (NSPS):

Pollutant or pollutant property	NSPS	
	Maximum for any 1 day	Maximum for monthly average
	Kg/kkg (or 1b/1,000 lb) of raw material	
BOD5	6.0	2.7
TSS	8.7	4.0
Oil and grease	2.5	1.1
Total chromium	0.16	0.06
pH	(1)	(1)

[1] Within the range 6.0 to 9.0.

[47 FR 52870, Nov. 23, 1982; 48 FR 30116, June 30, 1983]

§ 425.15 Pretreatment standards for existing sources (PSES).

(a) Except as provided in § 425.04 and 40 CFR 403.7 and 403.13, any existing source subject to this subpart which introduces process wastewater pollutants into a publicly owned treatment works must comply with 40 CFR Part 403, and achieve the following pretreatment standards:

Pollutant or pollutant property	PSES	
	Maximum for any 1 day	Maximum for monthly average
	Milligrams per liter (mg/l)	
Sulfide	24	.....
Total chromium	12	8
pH	(1)	(1)

[1] Not less than 7.0.

(b) Any existing source subject to this subpart which processes less than 275 hides/day shall comply with § 425.15(a), except that the total chromium limitations contained in § 425.15(a) do not apply.

[47 FR 52870, Nov. 23, 1982; 48 FR 30116, June 30, 1983, as amended at 53 FR 9182, Mar. 21, 1988; 61 FR 35685, July 8, 1996]

§ 425.16 Pretreatment standards for new sources (PSNS).

Except as provided in 40 CFR 403.7 and 425.04, any new source subject to this subpart that introduces process wastewater pollutants into a publicly owned treatment works must comply with 40 CFR Part 403, and achieve the pretreatment standards contained in § 425.15.

Subpart B—Hair Save, Chrome Tan, Retan-Wet Finish Subcategory

§ 425.20 Applicability; description of the hair save, chrome tan, retan-wet finish subcategory.

The provisions of this subpart are applicable to process wastewater discharges resulting from any tannery which processes raw or cured cattle or cattle-like hides into finished leather by hair save unhairing, chrome tanning, and retan-wet finishing.

§ 425.21 Effluent limitations representing the degree of effluent reduction attainable by the application of the best practicable control technology currently available (BPT).

Except as provided in 40 CFR 125.30 through 125.32, any existing point source subject to this subpart must achieve the following effluent limitations representing the degree of effluent reduction attainable by the application of the best practicable control technology currently available (BPT):

Pollutant or pollutant property	BPT limitations	
	Maximum for any 1 day	Maximum for monthly average
	Kg/kkg (or pound per 1,000 lb) of raw material	
BOD5	8.2	3.7
TSS	11.8	5.4
Oil and grease	3.4	1.5
Total chromium	0.21	0.08
pH	(1)	(1)

[1] Within the range 6.0 to 9.0.

§ 425.22 Effluent limitations representing the degree of effluent reduction attainable by the application of the best conventional pollutant control technology (BCT).

Except as provided in 40 CFR 125.30 through 125.32, any existing point source subject to this subpart must achieve the following effluent limitations representing the degree of effluent reduction attainable by the application of the best conventional pollutant control technology (BCT): The effluent limitations are those for BOD*5*, TSS, Oil and Grease, and pH contained in § 425.21.

§ 425.23 Effluent limitations representing the degree of effluent reduction attainable by the application of the best available technology economically achievable (BAT).

Except as provided in 40 CFR 125.30 through 125.32, any existing point source subject to this subpart must achieve the following effluent limitations representing the degree of effluent reduction attainable by the application of the best available technology economically achievable (BAT): The effluent limitations are those for Total Chromium contained in § 425.21.

§ 425.24 New source performance standards (NSPS).

Any new source subject to this subpart must achieve the following new source performance standards (NSPS):

Pollutant or pollutant property	NSPS	
	Maximum for any 1 day	Maximum for monthly average
	Kg/kkg (or pound per 1,000 lb) of raw material	
BOD5	6.9	3.1
TSS	9.9	4.5
Oil and grease	2.9	1.3
Total chromium	0.18	0.06
pH	(1)	(1)

[1] Within the range 6.0 to 9.0

§ 425.25 Pretreatment standards for existing sources (PSES).

Except as provided in § 425.04 and 40 CFR 403.7 and 403.13, any existing source subject to this subpart that introduces process wastewater pollutants into a publicly owned treatment works must comply with 40 CFR Part 403, and achieve the following pretreatment standards:

Pollutant or pollutant property	PSES	
	Maximum for any 1 day	Maximum for monthly average
	Milligrams per liter (mg/l)	
Sulfide	24	.....
Total Chromium	12	8
pH	(1)	(1)

[1] Not less than 7.0.

[47 FR 52870, Nov. 23, 1982, as amended at 61 FR 35685, July 8, 1996]

§ 425.26 Pretreatment standards for new sources (PSNS)

Except as provided in 40 CFR 403.7 and 425.04, any new source subject to this subpart that introduces process wastewater pollutants into a publicly owned treatment works must comply with 40 CFR Part 403, and achieve the pretreatment standards contained in § 425.25.

Subpart C—Hair Save or Pulp, Non-Chrome Tan, Retan-Wet Finish Subcategory

§ 425.30 Applicability; description of the hair save or pulp, non-chrome tan, retan-wet finish subcategory.

The provisions of this subpart are applicable to process wastewater discharges resulting from any tannery which processes raw or cured cattle or cattle-like hides into finished leather by hair save or pulp unhairing, vegetable tanning or alum, syntans, oils and other agents for tanning, and retan-wet finishing.

§ 425.31 Effluent limitations representing the degree of effluent reduction attainable by the application of the best practicable control technology currently available (BPT).

Except as provided in 40 CFR 125.30 through 125.32, any existing point source subject to this subpart must achieve the following effluent limitations representing the degree of effluent reduction attainable by the application of the best practicable control technology currently available (BPT):

Pollutant or pollutant property	BPT limitations	
	Maximum for any 1 day	Maximum for monthly average
	kg/kkg (or pounds per 1,000 pounds) of raw material	
BOD5	6.7	3.0
TSS	9.7	4.4
Oil & Grease	2.8	1.3
Total Chromium	0.17	0.06
pH	(1)	(1)

1 Within the range of 6.0 to 9.0

[47 FR 52870, Nov. 23, 1982, as amended at 53 FR 9182, Mar. 21, 1988]

§ 425.32 Effluent limitations representing the degree of effluent reduction attainable by the application of the best conventional pollutant control technology (BCT).

Except as provided in 40 CFR 125.30 through 125.32, any existing point source subject to this subpart must achieve the following effluent limitations representing the degree of effluent reduction attainable by the application of the best conventional pollutant control technology (BCT): The effluent limitations are those for BOD*5*, TSS, Oil and Grease, and pH contained in § 425.31.

§ 425.33 Effluent limitations representing the degree of effluent reduction attainable by the application of the best available technology economically achievable (BAT).

Except as provided in 40 CFR 125.30 through 125.32, any existing point source subject to this subpart must achieve the following effluent limitations representing the degree of effluent reduction attainable by the application of the best available technology economically achievable (BAT): The effluent limitations are those for Total Chromium contained in § 425.31.

§ 425.34 New source performance standards (NSPS).

Any new source subject to this subpart must achieve the following new source performance standards (NSPS):

Pollutant or pollutant property	NSPS	
	Maximum for any 1 day	Maximum for monthly average
	Kg/kkg (or pound per 1,000 lb) of raw material	
BOD5	5.9	2.7
TSS	8.5	3.9
Oil and grease	2.4	1.1
Total chromium	0.15	0.06
pH	(1)	(1)

1 Within the range 6.0 to 9.0.

§ 425.35 Pretreatment standards for existing sources (PSES).

(a) Except as provided in § 425.04 and 40 CFR 403.7 and 403.13, any existing sources subject to this subpart that introduces process wastewater pollutants into a publicly owned treatment works must comply with 40 CFR Part 403, and achieve the following pretreatment standards:

Pollutant or pollutant property	PSES limitations	
	Maximum for any 1 day	Maximum for monthly average
	Milligrams per liter (mg/l)	
Sulfide	24	--
Total Chromium	12	8
pH	(1)	(1)

1 Not less than 7.0.

(b) Any existing source subject to this subpart which processes less than 350 hides/day shall comply with § 425.35(a), except that the Total Chromium limitations contained in § 425.35(a) do not apply.

[47 FR 52870, Nov. 23, 1982; 48 FR 36116, June 30, 1983, as amended at 53 FR 9182, Mar. 21, 1988]

§ 425.36 Pretreatment standards for new sources (PSNS).

Except as provided in 40 CFR 403.7 and 425.04, any new source subject to this subpart that introduces process wastewater pollutants into a publicly owned treatment works must comply with 40 CFR Part 403, and achieve the pretreatment standards contained in § 425.35.

Subpart D—Retan-Wet Finish-Sides Subcategory

§ 425.40 Applicability; description of the retan-wet finish-sides subcategory.

The provisions of this subpart are applicable to process wastewater discharges resulting from any tannery which processes previously tanned hides and skins (grain side only) into finished leather by retan-wet finishing.

§ 425.41 Effluent limitations representing the degree of effluent reduction attainable by the application of the best practicable control technology currently available (BPT).

Except as provided in 40 CFR 125.30 through 125.32, any existing point source subject to this subpart must achieve the following effluent limitations representing the degree of effluent reduction attainable by the application of the best practicable control technology currently available (BPT):

Pollutant or pollutant property	BPT limitations	
	Maximum for any 1 day	Maximum for monthly average
	kg/kkg (or pounds per 1,000 pounds) of raw material	
BOD5	8.9	4.0
TSS	12.8	5.8
Oil & Grease	3.7	1.7
Total Chromium	0.23	0.08
pH	(1)	(1)

[1] Within the range of 6.0 to 9.0.

[47 FR 52870, Nov. 23, 1982, as amended at 53 FR 9182, Mar. 21, 1988]

§ 425.42 Effluent limitations representing the degree of effluent reduction attainable by the application of the best conventional pollutant control technology (BCT).

Except as provided in 40 CFR 125.30 through 125.32, any existing point source subject to this subpart must achieve the following effluent limitations representing the degree of effluent reduction attainable by the application of the best conventional pollutant control technology (BCT): The effluent limitations are those for BOD*5*, TSS, Oil and Grease, and pH contained in § 425.41.

§ 425.43 Effluent limitations representing the degree of effluent reduction attainable by the application of the best available technology economically achievable (BAT).

Except as provided in 40 CFR 125.30 through 125.32, any existing point source subject to this subpart must achieve the following effluent limitations representing the degree of effluent reduction attainable by the application of the best available technology economically achievable (BAT): The effluent limitations are those for Total Chromium contained in § 425.41.

§ 425.44 New source performance standards (NSPS).

Any new source subject to this subpart must achieve the following new source performance standards (NSPS):

Pollutant or pollutant property	NSPS	
	Maximum for any 1 day	Maximum for monthly average
	kg/kkg (or pounds per 1,000 pounds) of raw material	
BOD5	6.5	2.9
TSS	9.3	4.3
Oil & Grease	2.7	1.2
Total Chromium	0.17	0.06
pH	(1)	(1)

[1] Within the range of 6.0 to 9.0.

[47 FR 52870, Nov. 23, 1982, as amended at 53 FR 9182, Mar. 21, 1988]

§ 425.45 Pretreatment standards for existing sources (PSES).

Except as provided in 40 CFR 403.7 and 403.13, any existing source subject to this subpart that introduces process wastewater pollutants into a publicly owned treatment works must comply with 40 CFR part 403, and achieve the following pretreatment standards:

Pollutant or pollutant property	PSES	
	Maximum for any 1 day	Maximum for monthly average
	Milligrams per liter (mg/l)	
Total Chromium	19	12
pH	(1)	(1)

[1] Within the range 6.0 to 10.0.

§ 425.46 Pretreatment standards for new sources (PSNS).

Except as provided in 40 CFR 403.7, any new source subject to this subpart that introduces process wastewater pollutants into a publicly owned treatment works must comply with 40 CFR part 403, and achieve the pretreatment standards contained in § 425.45.

Subpart E—No Beamhouse Subcategory

§ 425.50 Applicability; description of the no beamhouse subcategory.

The provisions of this subpart are applicable to process wastewater discharges resulting from any tannery which processes cattle hides, sheepskins, or splits (hair previously removed and pickled) into finished leather by chrome or non-chrome tanning, and retan-wet finishing.

§ 425.51 Effluent limitations representing the degree of effluent reduction attainable by the application of the best practicable control technology currently available (BPT).

Except as provided in 40 CFR 125.30 through 125.32, any existing point source subject to this subpart must achieve the following effluent limitations representing the degree of effluent reduction attainable by the application of the best practicable control technology currently available (BPT):

Pollutant or pollutant property	BPT limitations	
	Maximum for any 1 day	Maximum for monthly average
	kg/kkg (or pounds per 1,000 pounds) of raw material	
BOD5	8.0	3.6
TSS	11.6	5.3
Oil & Grease	3.4	1.5
Total Chromium	0.21	0.08
pH	(1)	(1)

[1] Within the range of 6.0 to 9.0.

[47 FR 52870, Nov. 23, 1982, as amended at 53 FR 9182, Mar. 21, 1988]

§ 425.52 Effluent limitations representing the degree of effluent reduction attainable by the application of the best conventional pollutant control technology (BCT).

Except as provided in 40 CFR 125.30 through 125.32, any existing point source subject to this subpart must achieve the following effluent limitations representing the degree of effluent reduction attainable by the application of the best conventional control technology (BCT): The effluent limitations are those for BOD5, TSS, Oil and Grease, and pH contained in § 425.51.

§ 425.53 Effluent limitations representing the degree of effluent reduction attainable by the application of the best available technology economically achievable (BAT).

Except as provided in 40 CFR 125.30 through 125.32, any existing point source subject to this subpart must achieve the following effluent limitations representing the degree of effluent reduction attainable by the application of the best available technology economically achievable (BAT): The effluent limitations are those for Total Chromium contained in § 425.51

§ 425.54 New source performance standards (NSPS).

Any new source subject to this subpart must achieve the following new source performance standards (NSPS):

Pollutant or pollutant property	NSPS	
	Maximum for any 1 day	Maximum for monthly average
	kg/kkg (or pounds per 1,000 lb) of raw material	
BOD5	5.3	2.4
TSS	7.7	3.5
Oil & Grease	2.2	1.0
Total Chromium	0.14	0.05
pH	(1)	(1)

[1] Within the range 6.0 to 9.0.

§ 425.55 Pretreatment standards for existing sources (PSES).

Except as provided in 40 CFR 403.7 and 403.13, any existing source subject to this subpart that introduces process wastewater pollutants into a publicly owned treatment works must comply

with 40 CFR part 403, and achieve the following pretreatment standards:

Pollutant or pollutant property	PSES	
	Maximum for any 1 day	Maximum for monthly average
	Milligrams per liter (mg/l)	
Total chromium	19	12
pH	(1)	(1)

[1] Within the range 6.0 to 10.0.

§ 425.56 Pretreatment standards for new sources (PSNS).

Except as provided in 40 CFR 403.7, any new source subject to this subpart that introduces process wastewater pollutants into a publicly owned treatment works must comply with 40 CFR part 403, and achieve the pretreatment standards contained in § 425.55.

Subpart F—Through-the-Blue Subcategory

§ 425.60 Applicability; description of the through-the-blue subcategory.

The provisions of this subpart are applicable to process wastewater discharges resulting from any tannery which processes raw or cured cattle or cattle-like hides through the blue tanned state by hair pulp unhairing and chrome tanning; no retan-wet finishing is performed.

§ 425.61 Effluent limitations representing the degree of effluent reduction attainable by the application of the best practicable control technology currently available (BPT).

Except as provided in 40 CFR 125.30 through 125.32, any existing point source subject to this subpart must achieve the following effluent limitations representing the degree of effluent reduction attainable by the application of the best practicable control technology currently available (BPT):

Pollutant or pollutant property	BPT limitations	
	Maximum for any 1 day	Maximum for monthly average
	kg/kkg (or pounds per 1,000 pounds) of raw material	
BOD5	3.2	1.5
TSS	4.7	2.1
Oil & Grease	1.4	0.61
Total Chromium	0.08	0.03
pH	(1)	(1)

[1] Within the range of 6.0 to 9.0.

[47 FR 52870, Nov. 23, 1982, as amended at 53 FR 9183, Mar. 21, 1988]

§ 425.62 Effluent limitations representing the degree of effluent reduction attainable by the application of the best conventional pollutant control technology (BCT).

Except as provided in 40 CFR 125.30 through 125.32, any existing point source subject to this subpart must achieve the following effluent limitations representing the degree of effluent reduction attainable by the application of the best conventional pollutant control technology (BCT): The effluent limitations are those for BOD5, TSS, Oil and Grease, and pH contained in § 425.61.

§ 425.63 Effluent limitations representing the degree of effluent reduction attainable by the application of the best available technology economically achievable (BAT).

Except as provided in 40 CFR 125.30 through 125.32, any existing point source subject to this subpart must achieve the following effluent limitations representing the degree of effluent reduction attainable by the application of the best available technology economically achievable (BAT): The effluent limitations are those for Total Chromium contained in § 425.61.

§ 425.64 New source performance standards (NSPS).

Any new source subject to this subpart must achieve the following new source performance standards (NSPS):

Pollutant or pollutant property	BPT limitations	
	Maximum for any 1 day	Maximum for monthly average
	kg/kkg (or pounds per 1,000 pounds) of raw material	
BOD5	3.2	1.5
TSS	4.7	2.1
Oil & Grease	1.4	0.61
Total Chromium	0.08	0.03
pH	(1)	(1)

1 Within the range of 6.0 to 9.0.

[47 FR 52870, Nov. 23, 1982, as amended at 53 FR 9183, Mar. 21, 1988]

§ 425.65 Pretreatment standards for existing sources (PSES).

Except as provided in § 425.04 and 40 CFR 403.7 and 403.13, any existing source subject to this subpart that introduces process wastewater pollutants into a publicly owned treatment works must comply with 40 CFR part 403, and achieve the following pretreatment standards:

Pollutant or pollutant property	PSES	
	Maximum for any 1 day	Maximum for monthly average
	Milligrams per liter (mg/l)	
Sulfide	24	.....
Total chromium	12	8
pH	(1)	(1)

1 Not less than 7.0.

[47 FR 52870, Nov. 23, 1982, as amended at 61 FR 35685, July 8, 1996]

§ 425.66 Pretreatment standards for new sources (PSNS).

Except as provided in 40 CFR 403.7 and 425.04, any new source subject to this subpart that introduces process wastewater pollutants into a publicly owned treatment must comply with 40 CFR part 403, and must achieve the pretreatment standards contained in § 425.65.

Subpart G—Shearling Subcategory

§ 425.70 Applicability; description of the shearling subcategory.

The provisions of this subpart are applicable to process wastewater discharges resulting from any tannery which processes raw or cured sheep or sheep-like skins with the wool or hair retained into finished leather by chrome tanning, and retan-wet finishing.

§ 425.71 Effluent limitations representing the degree of effluent reduction attainable by the application of the best practicable control technology currently available (BPT).

Except as provided in 40 CFR 125.30 through 125.32, any existing point source subject to this subpart must achieve the following effluent limitations representing the degree of effluent reduction attainable by the application of the best practicable control technology currently available (BPT):

Pollutant or pollutant property	NSPS	
	Maximum for any 1 day	Maximum for monthly average
	kg/kkg (or pounds per 1,000 pounds) of raw material	
BOD5	3.0	1.3
TSS	4.3	1.9
Oil & Grease	1.2	0.55
Total Chromium	0.08	0.03
pH	(1)	(1)

1 Within the range of 6.0 to 9.0.

[47 FR 52870, Nov. 23, 1982, as amended at 53 FR 9183, Mar. 21, 1988]

§ 425.72 Effluent limitations representing the degree of effluent reduction attainable by the application of the best conventional pollutant control technology (BCT).

Except as provided in 40 CFR 125.30 through 125.32, any existing point source subject to this subpart must

achieve the following effluent limitations representing the degree of effluent reduction attainable by the application of the best conventional pollutant control technology (BCT): The effluent limitations are those for BOD*5*, TSS, Oil and Grease, and pH contained in § 425.71.

§ 425.73 Effluent limitations representing the degree of effluent reduction attainable by the application of the best available technology economically achievable (BAT).

Except as provided in 40 CFR 125.30 through 125.32, any existing point source subject to this subpart must achieve the following effluent limitations representing the degree of effluent reduction attainable by the application of the best available technology economically achievable (BAT): The effluent limitations are those for Total Chromium contained in § 425.71.

§ 425.74 New source performance standards (NSPS).

Any new source subject to this subpart must achieve the following new source performance standards (NSPS):

Pollutant or pollutant property	NSPS	
	Maximum for any 1 day	Maximum for monthly average
	Kg/kkg (or pound per 1,000 lb) of raw material	
BOD5	13.2	5.9
TSS	19.1	8.7
Oil and grease	5.6	2.5
Total chromium	0.34	0.12
pH	(1)	(1)

[1] Within the range 6.0 to 9.0.

§ 425.75 Pretreatment standards for existing sources (PSES).

Except as provided in 40 CFR 403.7 and 403.13, any existing source subject to this subpart that introduces process wastewater pollutants into a publicly owned treatment works must comply with 40 CFR part 403, and achieve the following pretreatment standards:

Pollutant or pollutant property	PSES	
	Maximum for any 1 day	Maximum for monthly average
	Milligrams per liter (mg/l)	
Total chromium	19	12
pH	(1)	(1)

[1] Within the range 6.0 to 10.0.

§ 425.76 Pretreatment standards for new sources (PSNS).

Except as provided in 40 CFR 403.7, any new source subject to this subpart that introduces process wastewater pollutants into a publicly owned treatment works must comply with 40 CFR part 403, and must achieve the pretreatment standards contained in § 425.75.

Subpart H—Pigskin Subcategory

§ 425.80 Applicability; description of the pigskin subcategory.

The provisions of this subpart are applicable to process wastewater discharges resulting from any tannery which processes raw or cured pigskins into finished leather by chemically dissolving or pulping the hair and tanning with chrome, then retan-wet finishing.

§ 425.81 Effluent limitations representing the degree of effluent reduction attainable by the application of the best practicable control technology currently available (BPT).

Except as provided in 40 CFR 125.30 through 125.32, any existing point source subject to this subpart must achieve the following effluent limitations representing the degree of effluent reduction attainable by the application of the best practicable control technology currently available (BPT):

Pollutant or pollutant property	BPT limitations	
	Maximum for any 1 day	Maximum for monthly average
	kg/kkg (or pounds per 1,000 lb) of raw material	
BOD5	7.0	3.2
TSS	10.1	4.6
Oil and grease	3.0	1.3
Total chromium	0.18	0.07
pH	(1)	(1)

[1] Within the range 6.0 to 9.0.

[47 FR 52870, Nov. 23, 1982; 48 FR 30117, June 30, 1983]

§ 425.82 Effluent limitations representing the degree of effluent reduction attainable by the application of the best conventional pollutant control technology (BCT).

Except as provided in 40 CFR 125.30 through 125.32, any existing point source subject to this subpart must achieve the following effluent limitations representing the degree of effluent reduction attainable by the application of the best conventional pollutant control technology (BCT): The effluent limitations are those for BOD*5*, TSS, Oil and Grease and pH contained in § 425.81.

§ 425.83 Effluent limitations representing the degree of effluent reduction attainable by the application of the best available technology economically achievable (BAT).

Except as provided in 40 CFR 125.30 through 125.32, any existing point source subject to this subpart must achieve the following effluent limitations representing the degree of effluent reduction attainable by the application of the best available technology economically achievable (BAT): The effluent limitations are those for Total Chromium contained in § 425.81.

§ 425.84 New source performance standards (NSPS).

Any new source subject to this subpart must achieve the following new source performance standards (NSPS):

Pollutant or pollutant property	NSPS	
	Maximum for any 1 day	Maximum for monthly average
	kg/kkg (or pounds per 1,000 lb) of raw material	
BOD5	5.8	2.6
TSS	8.3	3.8
Oil and grease	2.4	1.1
Total chromium	0.15	0.05
pH	(1)	(1)

[1] Within the range 6.0 to 9.0.

§ 425.85 Pretreatment standards for existing sources (PSES).

Except as provided in § 425.04 and 40 CFR 403.7 and 403.13, any existing source subject to this subpart that introduces process wastewater pollutants into a publicly owned treatment works must comply with 40 CFR part 403, and achieve the following pretreatment standards:

Pollutant or pollutant property	PSES	
	Maximum for any 1 day	Maximum for monthly average
	Milligrams per liter (mg/l)	
Sulfide	24	.....
Total chromium	12	8
pH	(1)	(1)

[1] Not less than 7.0.

[47 FR 52870, Nov. 23, 1982, as amended at 61 FR 35685, July 8, 1996]

§ 425.86 Pretreatment standards for new sources (PSNS).

Except as provided in 40 CFR 403.7 and 425.04, any new source subject to this subpart that introduces process wastewater pollutants into a publicly owned treatment works must comply with 40 CFR part 403, and achieve the pretreatment standards contained in § 425.85.

Subpart I—Retan-Wet Finish-Splits Subcategory

§ 425.90 Applicability; description of the retan-wet finish-splits subcategory.

The provisions of this subpart are applicable to process wastewater discharges resulting from any tannery which processes previously unhaired and tanned splits into finished leather by retan-wet finishing.

§ 425.91 Effluent limitations representing the degree of effluent reduction attainable by the application of the best practicable control technology currently available (BPT).

Except as provided in 40 CFR 125.30 through 125.32, any existing point source subject to this subpart must achieve the following effluent limitations representing the degree of effluent reduction attainable by the application of the best practicable control technology currently available (BPT):

Pollutant or pollutant property	BPT limitations	
	Maximum for any 1 day	Maximum for monthly average
	kg/kkg (or pounds per 1,000 pounds) of raw material	
BOD5	5.8	2.6
TSS	8.3	3.8
Oil & Grease	2.4	1.1
Total Chromium	0.15	0.05
pH	(1)	(1)

[1] Within the range of 6.0 to 9.0.

[47 FR 52870, Nov. 23, 1982, as amended at 53 FR 9183, Mar. 21, 1988]

§ 425.92 Effluent limitations representing the degree of effluent reduction attainable by the application of the best conventional pollutant control technology (BCT).

Except as provided in 40 CFR 125.30 through 125.32, any existing point source subject to this subpart must achieve the following effluent limitations representing the degree of effluent reduction attainable by the application of the best conventional pollutant control technology (BCT): The effluent limitations are those for BOD5, TSS, Oil and Grease, and pH contained in § 425.91.

§ 425.93 Effluent limitations representing the degree of effluent reduction attainable by the application of the best available technology economically achievable (BAT).

Except as provided in 40 CFR 125.30 through 125.32, any existing point source subject to this subpart must achieve the following effluent limitations representing the degree of effluent reduction attainable by the application of the best available technology economically achievable (BAT): The effluent limitations are those for Total Chromium contained in § 425.91.

§ 425.94 New source performance standards (NSPS).

Any new source subject to this subpart must achieve the following new source performance standards (NSPS):

Pollutant or pollutant property	NSPS	
	Maximum for any 1 day	Maximum for monthly average
	kg/kkg (or pounds per 1,000 lb) of raw material	
BOD5	3.5	1.6
TSS	5.1	2.3
Oil & Grease	1.5	0.66
Total Chromium	0.09	0.03
pH	(1)	(1)

[1] Within the range 6.0 to 9.0.

§ 425.95 Pretreatment standards for existing sources (PSES).

(a) Except as provided in 40 CFR 403.7 and 403.13, any existing source subject to this subpart that introduces process wastewater pollutants into a publicly owned treatment works must comply with 40 CFR part 403, and must achieve the following pretreatment standards:

Pollutant or pollutant property	PSES	
	Maximum for any 1 day	Maximum for monthly average
	Milligrams per liter (mg/l)	
Total Chromium	19	12
pH	(1)	(1)

[1] Within the range 6.0 to 10.0.

(b) Any existing source subject to this subpart which processes less than 3,600 splits/day shall comply with § 425.95(a), except that the total chromium limitations contained in § 425.95(a) do not apply.

[47 FR 52870, Nov. 23, 1982; 48 FR 30117, June 30, 1983, as amended at 53 FR 9183, Mar. 21, 1988]

§ 425.96 Pretreatment standards for new sources (PSNS).

Except as provided in 40 CFR 403.7, any new source subject to this subpart that introduces process wastewater pollutants into a publicly owned treatment works must comply with 40 CFR part 403, and achieve the pretreatment standards contained in § 425.95.

APPENDIX A TO PART 425—POTASSIUM FERRICYANIDE TITRATION METHOD

Source

The potassium ferricyanide titration method is based on method SLM 4/2 described in ''Official Method of Analysis,'' Society of Leather Trades' Chemists, Fourth Revised Edition, Redbourn, Herts., England, 1965.

Outline of Method

The buffered sulfide solution is titrated with standard potassium ferricyanide solution in the presence of a ferrous dimethylglyoxime ammonia complex. The sulfide is oxidized to sulfur. Sulfite interferes and must be precipitated with barium chloride. Thiosulfate is not titrated under the conditions of the determination (Charlot, ''Ann. chim, anal,'', 1945, 27, 153; Booth; ''J. Soc. Leather Trades' Chemists,'' 1956, 40, 238).

Apparatus

Burrette, 10 ml.

Reagents

1. Preparation of 0.02N potassium ferricyanide; Weigh to the nearest tenth of a gram 6.6 g. of analytical reagent grade potassium ferricyanide and dissolve in 1 liter distilled water. Store in an amber bottle in the dark. Prepare fresh each week.

2. Standardization of ferricyanide solution: Transfer 50 ml. of solution to a 250 ml. Erlenmeyer flask. Add several crystals of potassium iodide (about 1 g.), mix gently to dissolve, add 1 ml. of 6N hydrochloric acid, stopper the flask, and swirl gently. Let stand for two minutes, add 10 ml. of a 30 percent zinc sulfate solution, and titrate the mixture containing the gelatinous precipitate with standardized sodium thiosulfate or phenylarsine oxide titrant in the range of 0.025–0.050N Add 1 ml. of starch indicator solution after the color has faded to a pale yellow, and continue the titration to the disappearance of the blue color. Calculate the normality of the ferricyanide solution using the equation:

$$\text{Normality of Potassium Ferricyanide } [K_3 Fe(CN)_6] = \frac{(\text{ml of thiosulfate added})\,(\text{normality of thiosulfate})}{\text{Ml of } K_3\,Fe(CN)_6}$$

3. Preparation of 6M ammonium chloride buffer, pH 9.3: Dissolve 200 g. ammonium chloride in approximately 500 ml. distilled water, add 200 ml. 14M reagent grade ammonium hydroxide and make up to 1 liter with distilled water. The buffer should be prepared in a hood. Store in a tightly stoppered container.

4. Preparation of 0.05M barium chloride solution: Dissolve 12–13 g. barium chloride dihydrate in 1 liter of distilled water.

5. Preparation of ferrous dimethylglyoxime indicator solution: Mix 10 ml. 0.6 percent ferrous sulfate, 50 ml. 1 percent dimethylglyoxime in ethanol, and 0.5 ml. concentrated sulfuric acid.

6. Preparation of stock sulfide standard, 1000 ppm: Dissolve 2.4 g. reagent grade sodium sulfide in 1 liter of distilled water. Store in a tightly stoppered container. Diluted working standards must be prepared fresh daily and their concentrations determined by EPA test procedure 376.1 (see 40 CFR 136.3, Table IB, parameter 66 (49 FR 43234, October 26, 1984, with correction notice at 50 FR 690, January 4, 1985)) immediately prior to use.

7. Preparation of 10N NaOH: Dissolve 400 g. of analytical reagent grade NaOH in 1 liter distilled water.

Sample Preservation and Storage

Samples are to be field filtered (gravity or pressure) with coarse filter paper (Whatman 4 or equivalent) immediately after collection. Filtered samples must be preserved by adjustment to pH> 12 with 10N NaOH. Sample containers must be covered tightly and stored at 4 °C until analysis. Samples must be analyzed within 48 hours of collection. If these procedures cannot be achieved, it is the laboratory's responsibility to institute quality control procedures that will provide documentation of sample integrity.

Procedure

1. Transfer 100 ml. of sample to be analyzed, or a suitable portion containing not more than 15 mg. sulfide supplemented to 100 ml. with distilled water, to a 250 ml. Erlenmeyer flask.

2. Adjust the sample to pH 8.5–9.5 with 6N HC1.

3. Add 20 ml. of 6M ammonium chloride buffer (pH 9.3), 1 ml. of ferrous dimethylglyoxime indicator, and 25 ml. of 0.05M barium chloride. Mix gently, stopper, and let stand for 10 minutes.

4. After 10 minutes titrate with standardized potassium ferricyanide to disappearance of pink color. The endpoint is reached when

there is no reappearance of the pink color after 30 seconds.

Calculation and Reporting of Results.

$$\text{1. mg./l. sulfide} = \frac{A \times B \times 16{,}000}{\text{vol. in ml. of sample titrated}}$$

where A=volume in ml. of potassium ferricyanide solution used,
and B=normality of potassium ferricyanide solution.

2. Report results to two significant figures.

Quality Control

1. Each laboratory that uses this method is required to operate a formal quality control program. The minimum requirements of this program consist of an initial demonstration of laboratory capability and the analysis of replicate and spiked samples as a continuing check on performance. The laboratory is required to maintain performance records to define the quality of data that is generated. Ongoing performance checks must be compared with established performance criteria to determine if the results of analyses are within precision and accuracy limits expected of the method.

2. Before performing any analyses, the analyst must demonstrate the ability to generate acceptable precision and accuracy with this method by performing the following operations.

(a) Perform four replicate analyses of a 20 mg./l. sulfide standard prepared in distilled water (see paragraph 6 under ''Reagents'' above).

(b)(1) Calculate clean water precision and accuracy in accordance with standard statistical procedures. Clean water acceptance limits are presented in paragraph 2(b)(2) below. These criteria must be met or exceeded before sample analyses can be initiated. A clean water standard must be analyzed with each sample set and the established criteria met for the analysis to be considered under control.

(2) Clean water precision and accuracy acceptance limits: For distilled water samples containing from 5 mg./l. to 50 mg./l. sulfide, the mean concentration from four replicate analyses must be within the range of 50 to 110 percent of the true value.

3. The Method Detection Limits (MDL) should be determined periodically by each participating laboratory in accordance with the procedures specified in ''Methods for Chemical Analysis of Municipal and Industrial Wastewater,'' EPA–660/4–82–057, July 1982, EMSL, Cincinnati, OH 45268. For the convenience of the user, these procedures are contained in appendix C to part 425.

4. A minimum of one spiked and one duplicate sample must be performed for each analytical event, or five percent spikes and five percent duplicates when the number of samples per event exceeds twenty. Spike levels are to be at the MDL (see paragraph 3 above for MDL samples) and at x where x is the concentration found if in excess of the MDL. Spike recovery must be 40 to 120 percent for the analysis of a particular matrix type to be considered valid. If a sample or matrix type provides performance outside these acceptance limits, the analyses must be repeated using the modified Monier-Williams procedures described in appendix B to this part.

5. Report results in mg./liter. When duplicate and spiked samples are analyzed, report all data with the sample results.

[53 FR 9183, Mar. 21, 1988]

APPENDIX B TO PART 425—MODIFIED MONIER-WILLIAMS METHOD

Outline of Method

Hydrogen sulfide is liberated from an acidified sample by distillation and purging with nitrogen gas (N_2). Sulfur dioxide interference is removed by scrubbing the nitrogen gas stream in a pH 7 buffer solution. The sulfide gas is collected by passage through an alkaline hydrogen peroxide scrubbing solution in which it is oxidized to sulfate. Sulfate concentration in the scrubbing solution is determined by either EPA gravimetric test procedure 375.3 or EPA turbidimetric test procedure 375.4 (see 40 CFR 136.3, Table IB, parameter 65 (49 FR 43234, October 26, 1984, and correction notice at 50 FR 690, January 4, 1985)).

*Apparatus**

(See Figure 1.) * Catalogue numbers are given only to provide a more complete description of the equipment necessary, and do not constitute a manufacturer or vendor endorsement.

Heating mantel and control (VWR Cat. No. 33752–464)

1000 ml. distilling flask with three 24/40 joints (VWR Cat. No. 29280–215)

Friedricks condenser with two 24/40 joints (VWR Cat. No. 23161–009)

FIGURE 1
EQUIPMENT ASSEMBLY

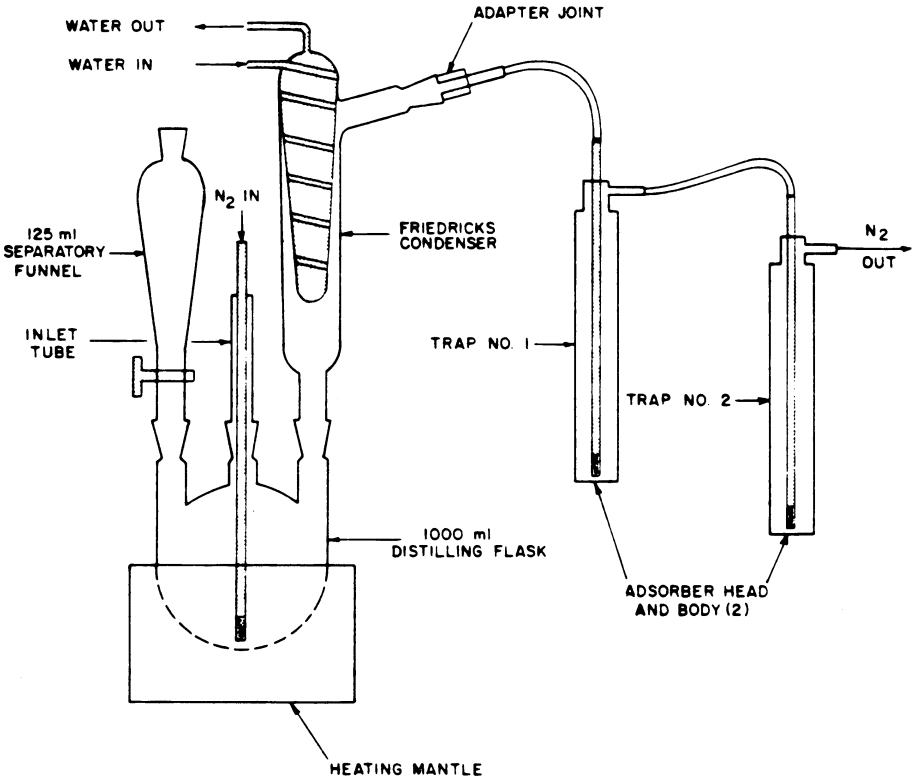

125 ml. separatory funnel with 24/40 joint (VWR Cat. No. 30357–102)
Inlet tube with 24/40 joint (VWR Cat. No. 33057–105)
Adapter joint 24/40 to 19/38 (VWR Cat. No. 62905–26)
Adsorber head (2 required) (Thomas Cat. No. 9849–R29)
Adsorber body (2 required) (Thomas Cat. No. 9849–R32)
Laboratory vacuum pump or water aspirator

Reagents

1. Potassium hydroxide, 6N: Dissolve 340 g. of analytical reagent grade KOH in 1 liter distilled water.

2. Sodium hydroxide, 6N: Dissolve 240 g. of analytical reagent grade NaOH in 1 liter distilled water.

3. Sodium hydroxide, 0.03N: Dilute 5.0 ml. of 6N NaOH to 1 liter with distilled water.

4. Hydrochloric acid, 6N: Dilute 500 ml. of concentrated HCl to 1 liter with distilled water.

5. Potassium phosphate stock buffer, 0.5M: Dissolve 70 g. of monobasic potassium phosphate in approximately 800 ml. distilled water. Adjust pH to 7.0 ± 0.1 with 6N potassium hydroxide and dilute to 1 liter with distilled water. Stock solution in stable for several months at 4 °C.

6. Potassium phosphate buffer, 0.05M: Dilute 1 volume of 0.5M potassium phosphate stock buffer with 9 volumes of distilled water. Solution is stable for one month at 4 °C.

7. Alkaline 3% hydrogen peroxide: Dilute 1 volume of 30 percent hydrogen peroxide with

9 volumes of 0.03N NaOH. Prepare this solution fresh each day of use.

8. Preparation of stock sulfide standard, 1000 ppm.: Dissolve 2.4 g. reagent grade sodium sulfide in 1 liter of distilled water. Store in a tightly stoppered container. Diluted working standards must be prepared fresh daily and their concentrations determined by EPA test procedure 376.1 immediately prior to use (see 40 CFR 136.3, Table IB, parameter 66 (49 FR 43234, October 26, 1984, and correction notice at 50 FR 690, January 4, 1985)).

Sample Preservation and Storage

Preserve unfiltered wastewater samples immediately after collection by adjustment to pH>9 with 6N NaOH and addition of 2 ml. of 2N zinc acetate per liter. This amount of zinc acetate is adequate to preserve 64 mg./l. sulfide under ideal conditions. Sample containers must be covered tightly and stored at 4 °C until analysis. Samples must be analyzed within seven days of collection. If these procedures cannot be achieved, it is the laboratory's responsibility to institute quality control procedures that will provide documentation of sample integrity.

Procedure (See Figure 1 for apparatus layout.)

1. Place 50 ml. of 0.05M pH 7.0 potassium phosphate buffer in Trap No. 1.

2. Place 50 ml. of alkaline 3 percent hydrogen peroxide in Trap No. 2.

3. Sample introduction and N_2 prepurge: Gently mix sample to be analyzed to resuspend settled material, taking care not to aerate the sample. Transfer 400 ml. of sample, or a suitable portion containing not more than 20 mg. sulfide diluted to 400 ml. with distilled water, to the distillation flask. Adjust the N_2 flow so that the impingers are frothing vigorously, but not overflowing. Vaccum may be applied at the outlet of Trap No. 2 to assist in smooth purging. The N_2 inlet tube of the distillation flask must be submerged deeply in the sample to ensure efficient agitation. Purge the sample for 30 minutes without applying heat. Test the apparatus for leaks during the prepurge cycle (Snoop or soap water solution).

4. Volatilization of H_2 S: Interrupt the N_2 flow (and vacuum) and introduce 100 ml. of 6N HCl to the sample using the separatory funnel. Immediately resume the gas flow (and vacuum). Apply maximum heat with the heating mantle until the sample begins to boil, then reduce heat and maintain gentle boiling and N_2 flow for 30 minutes. Terminate the distillation cycle by turning off the heating mantle and maintaining N_2 flow through the system for 5 to 10 minutes. Then turn off the N_2 flow (and release vacuum) and *cautiously* vent the system by placing 50 to 100 ml. of distilled water in the separatory funnel and opening the stopcock carefully. When the bubbling stops and the system is equalized to atmospheric pressure, remove the separatory funnel. Extreme care must be exercised in terminating the distillation cycle to avoid flash-over, drawback, or violent steam release.

5. Analysis: Analyze the contents of Trap No. 2 for sulfate according to either EPA gravimetric test procedure 375.3 or EPA turbidimetric test procedure 375.4 (see 40 CFR 136.3, Table IB, parameter 65 (49 FR 43234, October 26, 1984, and correction notice at 50 FR 690, January 4, 1985)). Use the result to calculate mg./l. of sulfide in wastewater sample.

Calculations and Reporting of Results

1. Gravimetric procedure:

$$\text{mg sulfide/l.} = \frac{(\text{mg. } BaSO_4 \text{ collected in Trap No. 2}) \times (137)}{\text{volume in ml. of waste sample distilled}}$$

2. Turbidimetric procedure:

$$\text{mg. sulfide/l.} = \frac{A \times B \times 333}{C}$$

where A=mg./l. of sulfate in Trap No. 2
B=liquid volume in liters in Trap No. 2
and C=volume in ml. of waste sample distilled

3. Report results to two significant figures.

Quality Control

1. Each laboratory that uses this method is required to operate a formal quality control program. The minimum requirements of this program consist of an initial demonstration of laboratory capability and the analysis of replicate and spiked samples as a continuing check on performance. The laboratory is required to maintain performance records to define the quality of data that is generated. Ongoing performance checks must be compared with established performance criteria to determine if the results of analyses are within precision and accuracy limits expected of the method.

2. Before performing any analyses, the analyst must demonstrate the ability to generate acceptable accuracy and precision by performing the following operations.

(a) Perform four replicate analyses of a 20 mg./l. sulfide standard prepared in distilled water (see paragraph 8 under ''Reagents'' above).

(b)(1) Calculate clean water precision and accuracy in accordance with standard statistical procedures. Clean water acceptance limits are presented in paragraph 2(b)(2)

below. These criteria must be met or exceeded before sample analyses can be initiated. A clean water standard must be analyzed with each sample set and the established criteria met for the analyses to be considered under control.

(2) Clean water precision and accuracy acceptance limits: For distilled water samples containing from 5 mg./l. to 50 mg./l. sulfide, the mean concentration from four replicate analyses must be within the range of 72 to 114 percent of the true value.

3. The Method Detection Limit (MDL) should be determined periodically by each participating laboratory in accordance with the procedures specified in ''Methods for Chemical Analysis of Municipal and Industrial Wastewater,'' EPA–600/4–82–057, July 1982, EMSL, Cincinnati, OH 45268. For the convenience of the user, these procedures are contained in appendix C to part 425.

4. A minimum of one spiked and one duplicate sample must be run for each analytical event, or five percent spikes and five percent duplicates when the number of samples per event exceeds twenty. Spike levels are to be at the MDL (see paragraph 3 above for MDL samples) and at x when x is the concentration found if in excess of the MDL. Spike recovery must be 60 to 120 percent for the analysis of a particular matrix type to be considered valid.

5. Report all results in mg./liter. When duplicate and spiked samples are analyzed, report all data with the sample results.

[53 FR 9184, Mar. 21, 1988]

APPENDIX C TO PART 425—DEFINITION AND PROCEDURE FOR THE DETERMINATION OF THE METHOD DETECTION LIMIT[1]

The method detection limit (MDL) is defined at the minimum concentration of a substance that can be identified, measured and reported with 99 percent confidence that the analyte concentration is greater than zero and determined from analysis of a sample in a given matrix containing analyte.

Scope and Application

This procedure is designed for applicability to a wide variety of sample types ranging from reagent (blank) water containing analyte to wastewater containing analyte. The MDL for an analytical procedure may vary as a function of sample type. The procedure requires a complete, specific and well defined analytical method. It is essential that all sample processing steps of the analytical method be included in the determination of the method detection limit.

The MDL obtained by this procedure is used to judge the significance of a single measurement of a future sample.

The MDL procedure was designed for applicability to a broad variety of physical and chemical methods. To accomplish this, the procedure was made device- or instrument-independent.

Procedure

1. Make an estimate of the detection limit using one of the following:

(a) The concentration value that corresponds to an instrument signal/noise ratio in the range of 2.5 to 5. If the criteria for qualitative identification of the analyte is based upon pattern recognition techniques, the least abundant signal necessary to achieve identification must be considered in making the estimate.

(b) The concentration value that corresponds to three times the standard deviation of replicate instrumental measurements for the analyte in reagent water.

(c) The concentration value that corresponds to the region of the standard curve where there is a significant change in sensitivity at low analyte concentrations, i.e., a break in the slope of the standard curve.

(d) The concentration value that corresponds to known instrumental limitations.

It is recognized that the experience of the analyst is important to this process. However, the analyst must include the above considerations in the estimate of the detection limit.

2. Prepare reagent (blank) water that is as free of analyte as possible. Reagent or interference free water is defined as a water sample in which analyte and interferent concentrations are not detected at the method detection limit of each analyte of interest. Interferences are defined as systematic errors in the measured analytical signal of an established procedure caused by the presence of interfering species (interferent). The interferent concentration is presupposed to be normally distributed in representative samples of a given matrix.

3. (a) If the MDL is to be determined in reagent water (blank), prepare a laboratory standard (analyte in reagent water) at a concentration which is at least equal to or in the same concentration range as the estimated MDL. (Recommended between 1 and 5 times the estimated MDL.) Proceed to Step 4.

(b) If the MDL is to be determined in another sample matrix, analyze the sample. If the measured level of the analyte is in the recommended range of one to five times the estimated MDL, proceed to Step 4.

If the measured concentration of analyte is less than the estimated MDL, add a known

[1] Source: ''Methods for Chemical Analysis of Municipal and Industrial Wastewater,'' EPA–600/4–82–057, July 1982, EMSL, Cincinnati, OH 45268

amount of analyte to bring the concentration of analyte to between one and five times the MDL. In the case where an interference is coanalyzed with the analyte:

If the measured level of analyte is greater than five times the estimated MDL, there are two options:

(1) Obtain another sample of lower level of analyte in same matrix if possible.

(2) The sample may be used as is for determining the MDL if the analyte level does not exceed 10 times the MDL of the analyte in reagent water. The variance of the analytical method changes as the analyte concentration increases from the MDL, hence the MDL determined under these circumstances may not truly reflect method variance at lower analyte concentrations.

4. (a) Take a minimum of seven aliquots of the sample to be used to calculate the MDL and process each through the entire anlaytical method. Make all computations according to the defined method with final results in the method reporting units. If blank measurements are required to calculate the measured level of analyte, obtain separate blank measurements for each sample aliquot anlayzed. The average blank measurement is subtracted from the respective sample measurements.

(b) It may be economically and technically desirable to evaluate the estimated MDL before proceeding with 4a. This will: (1) Prevent repeating this entire procedure when the costs of analyses are high and (2) insure that the procedure is being conducted at the correct concentration. It is quite possible that an incorrect MDL can be calculated from data obtained at many times the real MDL even though the background concentration of analyte is less than five times the calculated MDL. To insure that the estimate of the MDL is a good estimate, it is necessary to determine that a lower concentration of analyte will not result in a significantly lower MDL. Take two aliquots of the sample to be used to calculate the MDL and process each through the entire method, including blank measurements as described above in 4a. Evaluate these data:

(1) If these measurements indicate the sample is in the desirable range for determining the MDL, take five additional aliquots and proceed. Use all seven measurements to calculate the MDL.

(2) If these measurements indicate the sample is not in the correct range, reestimate the MDL, obtain new sample as in 3 and repeat either 4a or 4b.

5. Calculate the variance (S^2) and standard deviation (S) of the replicate measurements, as follows:

$$S^2 = \frac{1}{n-1}\left[\sum_{i=1}^{n} X_i^2 - \left(\sum_{i=1}^{n} X_i\right)^2 \Big/ n\right]$$

$$S = \left(S^2\right)^{0.5}$$

where: the x_i, i = 1 to n are the analytical results in the final method reporting units obtained from the n sample aliquots and

$$\sum_{i=1}^{n} X_i^2$$

refers to the sum of the X values from i = 1 to n.

6. (a) Compute the MDL as follows:

$MDL = t_{(n-1, 1-a=.99)}\ (S)$

where:

MDL=the method detection

$t_{(n-1,\ 1-a=.99)}$=the students' t value appropriate for a 99 percent confidence level and a standard deviation estimate with n-1 degrees of freedom. See Table.

S=standard deviation of the replicate analyses.

(b) The 95 percent confidence limits for the MDL derived in 6a are computed according to the following equations derived from percentiles of the chi square over degrees of freedom distribution (X2/df) and calculated as follows:

MDL_{LCL}=0.69 MDL

MDL_{UCL}=1.92 MDL where MDL_{LCL} and MDL_{UCL} are the lower and upper 95 percent confidence limits respectively based on seven aliquots.

7. Optional iterative procedure to verify the reasonableness of the estimated MDL and calculated MDL of subsequent MDL determinations.

(a) If this is the initial attempt to compute MDL based on the estimated MDL in Step 1, take the MDL as calculated in Step 6, spike in the matrix at the calculated MDL and proceed through the procedure starting with Step 4.

(b) If the current MDL determination is an iteration of the MDL procedure for which the spiking level does not permit qualitative identification, report the MDL as that concentration between the current spike level and the previous spike level which allows qualitative identification.

(c) If the current MDL determination is an iteration of the MDL procedure and the spiking level allows qualitative identification, use S^2 from the current MDL calculation and S^2 from the previous MDL calculation to compute the F ratio.

$$\text{if} \quad \frac{S_A^2}{S_B^2} < 3.05$$

then compute the pooled standard deviation by the following equation:

$$S_{pooled} = \left[\frac{6S_A^2 + 6S_B^2}{12} \right]^{0.5}$$

$$\text{if} \quad \frac{S_A^2}{S_B^2} > 3.05,$$

respike at the last calculated MDL and process the samples through the procedure starting with Step 4.

(d) Use the S_{pooled} as calculated in 7b to compute the final MDL according to the following equation:

MDL=2.681 (S_{pooled})

where 2.681 is equal to $t(12, 1-a=.99)$

(e) The 95 percent confidence limits for MDL derived in 7c are computed according to the following equations derived from percentiles of the chi squared over degrees of freedom distribution.

MDL_{LCL}=0.72 MDL

MDL_{UCL}=1.65 MDL

where LCL and UCL are the lower and upper 95 percent confidence limits respectively based on 14 aliquots.

Reporting

The analytical method used must be specifically identified by number or title and the MDL for each analyte expressed in the appropriate method reporting units. If the analytical method permits options which affect the method detection limit, these conditions must be specified with the MDL value. The sample matrix used to determine the MDL must also be identified with the MDL value. Report the mean analyte level with the MDL. If a laboratory standard or a sample that contained a known amount analyte was used for this determination, report the mean recovery, and indicate if the MDL determination was iterated.

If the level of the analyte in the sample matrix exceeds 10 times the MDL of the analyte in reagent water, do not report a value for the MDL.

REFERENCE

Glaser, J.A., Foerst, D.L., McKee, G.D., Quave, S.A., and Budde, W.L., ''Trace Analysis for Wastewaters,'' Environmental Science and Technology, 15, 1426 (1981).

TABLE OF STUDENTS' T VALUES AT THE 99 PERCENT CONFIDENCE LEVEL

Number of replicates	Degrees of freedom (n−1)	$t(n-1, 1-a=.99)$
7	6	3.143
8	7	2.998
9	8	2.896
10	9	2.821
11	10	2.764
16	15	2.602
21	20	2.528
26	25	2.485
31	30	2.457
61	60	2.390
		2.326

[53 FR 9186, Mar. 21, 1988]

PART 426—GLASS MANUFACTURING POINT SOURCE CATEGORY

Subpart A—Insulation Fiberglass Subcategory

Sec.
426.10 Applicability; description of the insulation fiberglass subcategory.
426.11 Specialized definitions.
426.12 Effluent limitations guidelines representing the degree of effluent reduction attainable by the application of the best practicable control technology currently available.
426.13 Effluent limitations guidelines representing the degree of effluent reduction attainable by the application of the best available technology economically achievable.
426.14 [Reserved]
426.15 Standards of performance for new sources.
426.16 Pretreatment standards for new sources.
426.17 Effluent limitations guidelines representing the degreee of effluent reduction attainable by the application of the best conventional pollutant control technology (BCT).

Subpart B—Sheet Glass Manufacturing Subcategory

426.20 Applicability; description of the sheet glass manufacturing subcategory.
426.21 Specialized definitions.
426.22 Effluent limitations guidelines representing the degree of effluent reduction attainable by the application of the best practicable control technology currently available.

426.23 Effluent limitations guidelines representing the degree of effluent reduction attainable by the application of the best available technology economically achievable.
426.24 Pretreatment standards for existing sources.
426.25 Standards of performance for new sources.
426.26 Pretreatment standards for new sources.
426.27 Effluent limitations guidelines representing the degree of effluent reduction attainable by the application of the best conventional pollutant control technology.

Subpart C—Rolled Glass Manufacturing Subcategory

426.30 Applicability; description of the rolled glass manufacturing subcategory.
426.31 Specialized definitions.
426.32 Effluent limitations guidelines representing the degree of effluent reduction attainable by the application of the best practicable control technology currently available.
426.33 Effluent limitations guidelines representing the degree of effluent reduction attainable by the application of the best available technology economically achievable.
426.34 Pretreatment standards for existing sources.
426.35 Standards of performance for new sources.
426.36 Pretreatment standards for new sources.
426.37 Effluent limitations guidelines representing the degree of effluent reduction attainable by the application of the best conventional pollutant control technology.

Subpart D—Plate Glass Manufacturing Subcategory

426.40 Applicability; description of the plate glass manufacturing subcategory.
426.41 Specialized definitions.
426.42 Effluent limitations guidelines representing the degree of effluent reduction attainable by the application of the best practicable control technology currently available.
426.43 [Reserved]
426.44 Pretreatment standards for existing sources.
426.45 Standards of performance for new sources.
426.46 Pretreatment standards for new sources.
426.47 Effluent limitations guidelines representing the degreee of effluent reduction attainable by the application of the best conventional pollutant control technology (BCT).

Subpart E—Float Glass Manufacturing Subcategory

426.50 Applicability; description of the float glass manufacturing subcategory.
426.51 Specialized definitions.
426.52 Effluent limitations guidelines representing the degree of effluent reduction attainable by the application of the best practicable control technology currently available.
426.53 Effluent limitations guidelines representing the degree of effluent reduction attainable by the application of the best available technology economically achievable.
426.54 [Reserved]
426.55 Standards of performance for new sources.
426.56 Pretreatment standards for new sources.
426.57 Effluent limitations guidelines representing the degree of effluent reduction attainable by the application of the best conventional pollutant control technology.

Subpart F—Automotive Glass Tempering Subcategory

426.60 Applicability; description of the automotive glass tempering subcategory.
426.61 Specialized definitions.
426.62 Effluent limitations guidelines representing the degree of effluent reduction attainable by the application of the best practicable control technology currently available.
426.63 [Reserved]
426.64 Pretreatment standards for existing sources.
426.65 Standards of performance for new sources.
426.66 Pretreatment standards for new sources.
426.67 Effluent limitations guidelines representing the degree of effluent reduction attainable by the application of the best conventional pollutant control technology.

Subpart G—Automotive Glass Laminating Subcategory

426.70 Applicability; description of the automotive glass laminating subcategory.
426.71 Specialized definitions.
426.72 Effluent limitations guidelines representing the degree of effluent reduction attainable by the application of the best practicable control technology currently available.
426.73 Effluent limitations guidelines representing the degree of effluent reduction

attainable by the application of the best available technology economically achievable.
426.74 [Reserved]
426.75 Standards of performance for new sources.
426.76 Pretreatment standards for new sources.
426.77 Effluent limitations guidelines representing the degree of effluent reduction attainable by the application of the best conventional pollutant control technology.

Subpart H—Glass Container Manufacturing Subcategory

426.80 Applicability; description of the glass container manufacturing subcategory.
426.81 Specialized definitions.
426.82 Effluent limitations guidelines representing the degree of effluent reduction attainable by the application of the best practicable control technology currently available.
426.83–426.84 [Reserved]
426.85 Standards of performance for new sources.
426.86 Pretreatment standards for new sources.
426.87 Effluent limitations guidelines representing the degree of effluent reduction attainable by the application of the best conventional pollutant control technology.

Subpart I—Machine Pressed and Blown Glass Manufacturing Subcategory [Reserved]

Subpart J—Glass Tubing (Danner) Manufacturing Subcategory

426.100 Applicability; description of the glass tubing (Danner) manufacturing subcategory.
426.101 Specialized definitions.
426.102 Effluent limitations guidelines representing the degree of effluent reduction attainable by the application of the best practicable control technology currently available.
426.103–426.104 [Reserved]
426.105 Standards for performance for new sources.
426.106 Pretreatment standards for new sources.
426.107 Effluent limitations guidelines representing the degree of effluent reduction attainable by the application of the best conventional pollutant control technology.

Subpart K—Television Picture Tube Envelope Manufacturing Subcategory

426.110 Applicability; description of the television picture tube envelope manufacturing subcategory.
426.111 Specialized definitions.
426.112 Effluent limitations guidelines representing the degree of effluent reduction attainable by the application of the best practicable control technology currently available.
426.113 Effluent limitations guidelines representing the degree of effluent reduction attainable by the application of the best available technology economically achievable.
426.114 [Reserved]
426.115 Standards of performance for new sources.
426.116 Pretreatment standards for new sources.
426.117 Effluent limitations guidelines representing the degree of effluent reduction attainable by the application of the best conventional pollutant control technology.

Subpart L—Incandescent Lamp Envelope Manufacturing Subcategory

426.120 Applicability; description of the incandescent lamp envelope manufacturing subcategory.
426.121 Specialized definitions.
426.122 Effluent limitations guidelines representing the degree of effluent reduction attainable by the application of the best practicable control technology currently available.
426.123 Effluent limitations guidelines representing the degree of effluent reduction attainable by the application of the best available technology economically achievable.
426.124 [Reserved]
426.125 Standards of performance for new sources.
426.126 Pretreatment standards for new sources.
426.127 Effluent limitations guidelines representing the degree of effluent reduction attainable by the application of the best conventional pollutant control technology.

Subpart M—Hand Pressed and Blown Glass Manufacturing Subcategory

426.130 Applicability; description of the hand pressed and blown glass manufacturing subcategory.
426.131 Specialized definitions.
426.132 Effluent limitations guidelines representing the degree of effluent reduction attainable by the application of the best

practicable control technology currently available.
426.133 Effluent limitations guidelines representing the degree of effluent reduction attainable by the application of the best available technology economically achievable.
426.134 [Reserved]
426.135 Standards of performance for new sources.
426.136 Pretreatment standards for new sources.
426.137 [Reserved]

AUTHORITY: Secs. 301, 304 (b) and (c), 306 (b) and (c), 307(c), and 316(b) of the Federal Water Pollution Control Act, as amended; 33 U.S.C. 1251, 1311, 1314, 1316 (b) and (c), 1317(b); 86 Stat. 816 et seq., Pub. L. 92–500; 91 Stat. 1567, Pub. L. 95–217.

SOURCE: 39 FR 2565, Jan. 22, 1974, unless otherwise noted.

Subpart A—Insulation Fiberglass Subcategory

§ 426.10 Applicability; description of the insulation fiberglass subcategory.

The provisions of this subpart are applicable to discharges resulting from the production of insulation fiberglass in which molten glass is either directly or indirectly made, continuously fiberized and chemically bonded into a wool-like material.

§ 426.11 Specialized definitions.

For the purpose of this subpart:

(a) Except as provided below, the general definitions, abbreviations and methods of analysis set forth in 40 CFR part 401 shall apply to this subpart.

(b) The term ''cullet water'' shall mean that water which is exclusively and directly applied to molten glass in order to solidify the glass.

(c) The term ''advanced air emission control devices'' shall mean air pollution control equipment, such as electrostatic precipitators and high energy scrubbers, that are used to treat an air discharge which has been treated initially by equipment including knockout chambers and low energy scrubbers.

§ 426.12 Effluent limitations guidelines representing the degree of effluent reduction attainable by the application of the best practicable control technology currently available.

The following limitations establish the quantity or quality of pollutants or pollutant properties which may be discharged by a point source subject to the provisions of this subpart after application of the best practicable control technology currently available:

(a) There shall be no discharge of process waste water pollutants to navigable waters, except as permitted in paragraph (b) of this section.

(b) The following limitations establish the quantity or quality of pollutants or pollutant properties, controlled by this section, which may be discharged in process waste water from advanced air emission control devices, when such water cannot be consumed in the process.

Effluent characteristic	Effluent limitations	
	Maximum for any 1 day	Average of daily values for 30 consecutive days shall not exceed—
	Metric units (kilograms per 1,000 kg of product)	
Phenol	0.0006	0.0003
COD	0.33	.165
BOD5	0.024	.012
TSS	0.03	.015
pH	(1)	(1)
	English units (pounds per 1,000 lb. of product)	
Phenol	0.0006	0.0003
COD	0.33	.165
BOD5	0.024	.012
TSS	0.03	.015
pH	(1)	(1)

[1] Within the range 6.0 to 9.0.

[39 FR 2565, Jan. 22, 1974; 39 FR 4760, Feb. 7, 1974]

§ 426.13 Effluent limitations guidelines representing the degree of effluent reduction attainable by the application of the best available technology economically achievable.

The following limitations establish the quantity or quality of pollutants or

pollutant properties which may be discharged by a point source subject to the provisions of this subpart after application of the best available technology economically achievable: There shall be no discharge of process waste water pollutants to navigable waters.

§ 426.14 [Reserved]

§ 426.15 Standards of performance for new sources.

The following standards of performance establish the quantity or quality of pollutants or pollutant properties which may be discharged by a new source subject to the provisions of this subpart: There shall be no discharge of process waste water pollutants to navigable waters.

§ 426.16 Pretreatment standards for new sources.

Any new source subject to this subpart that introduces process wastewater pollutants into a publicly owned treatment works must comply with 40 CFR part 403.

(a) *Applicability*. The provisions of this section shall apply to discharges of process waste water pollutants into publicly owned treatment works except for that portion of the waste stream which constitutes cullet water.

(b) [Reserved]

[39 FR 2565, Jan. 22, 1974, as amended at 60 FR 33958, June 29, 1995]

§ 426.17 Effluent limitations guidelines representing the degree of effluent reduction attainable by the application of the best conventional pollutant control technology (BCT).

Except as provided in §§ 125.30 through 125.32, any existing point source subject to this subpart shall achieve the following effluent limitations representing the degree of effluent reduction attainable by the application of the best conventional pollutant control technology (BCT): The limitations shall be the same as those specified for conventional pollutants (which are defined in § 401.16) in § 426.12 of this subpart for the best practicable control technology currently available (BPT).

[51 FR 25000, July 9, 1986]

Subpart B—Sheet Glass Manufacturing Subcategory

SOURCE: 39 FR 5714, Feb. 14, 1974, unless otherwise noted.

§ 426.20 Applicability; description of the sheet glass manufacturing subcategory.

The provisions of this subpart are applicable to discharges of pollutants resulting from the process in which several mineral ingredients (sand, soda ash, limestone, dolomite, cullen and other ingredients) are mixed, melted in a furnace, and drawn vertically from a melting tank to form sheet glass.

§ 426.21 Specialized definitions.

For the purpose of this subpart:

(a) Except as provided below, the general definitions, abbreviations and methods of analysis set forth in 40 CFR part 401 shall apply to this subpart.

(b) The term ''cullet'' shall mean any broken glass generated in the manufacturing process.

§ 426.22 Effluent limitations guidelines representing the degree of effluent reduction attainable by the application of the best practicable control technology currently available.

Except as provided in §§ 125.30 through 125.32, any existing point source subject to this subpart shall achieve the following effluent limitations representing the degree of effluent reduction attainable by the application of the best practicable control technology currently available (BPT): There shall be no discharge of process waste water pollutants to navigable waters.

[60 FR 33958, June 29, 1995]

§ 426.23 Effluent limitations guidelines representing the degree of effluent reduction attainable by the application of the best available technology economically achievable.

The following limitations establish the quantity or quality of pollutants or pollutant properties which may be discharged by a point source subject to the provisions of this subpart after application of the best available technology economically achievable: There

shall be no discharge of process waste water pollutants to navigable waters.

§ 426.24 Pretreatment standards for existing sources.

Any existing source subject to this subpart that introduces process wastewater pollutants into a publicly owned treatment works must comply with 40 CFR part 403. In addition, the following pretreatment standard establishes the quantity or quality of pollutants or pollutant properties controlled by this section which may be discharged to a publicly owned treatment works by a point source subject to the provisions of this subpart.

Pollutant or pollutant property	Pretreatment standard
pH	No limitation.
TSS	Do.

[40 FR 6444, Feb. 11, 1975, as amended at 60 FR 33958, June 29, 1995]

§ 426.25 Standards of performance for new sources.

The following standards of performance establish the quantity or quality of pollutants or pollutant properties which may be discharged by a new source subject to the provisions of this subpart: There shall be no discharge of process waste water pollutants to navigable waters.

§ 426.26 Pretreatment standards for new sources.

Any new source subject to this subpart that introduces process wastewater pollutants into a publicly owned treatment works must comply with 40 CFR part 403.

[60 FR 33958, June 29, 1995]

§ 426.27 Effluent limitations guidelines representing the degree of effluent reduction attainable by the application of the best conventional pollutant control technology.

The following limitations establish the quantity or quality of pollutants or pollutant properties, which may be discharged by a point source subject to the provisions of this subpart after application of the best conventional pollutant control technology: There shall be no discharge of process waste water pollutants to navigable waters.

[44 FR 50746, Aug. 29, 1979]

Subpart C—Rolled Glass Manufacturing Subcategory

SOURCE: 39 FR 5714, Feb. 14, 1974, unless otherwise noted.

§ 426.30 Applicability; description of the rolled glass manufacturing subcategory.

The provisions of this subpart are applicable to discharges of pollutants resulting from the process in which several mineral ingredients (sand, soda ash, limestone, dolomite, cullet, and other ingredients) are mixed, melted in a furnace, and cooled by rollers to form rolled glass.

§ 426.31 Specialized definitions.

For the purpose of this subpart:

(a) Except as provided below, the general definitions, abbreviations and methods of analysis set forth in 40 CFR part 401 shall apply to this subpart.

(b) The term ''cullet'' shall mean any broken glass generated in the manufacturing process.

§ 426.32 Effluent limitations guidelines representing the degree of effluent reduction attainable by the application of the best practicable control technology currently available.

Except as provided in §§ 125.30 through 125.32, any existing point source subject to this subpart shall achieve the following effluent limitations representing the degree of effluent reduction attainable by the application of the best practicable control technology currently available (BPT): There shall be no discharge of process waste water pollutants to navigable waters.

[60 FR 33958, June 29, 1995]

§ 426.33 Effluent limitations guidelines representing the degree of effluent reduction attainable by the application of the best available technology economically achievable.

The following limitations establish the quantity or quality of pollutants or pollutant properties which may be discharged by a point source subject to

the provisions of this subpart after application of the best available technology economically achievable: There shall be no discharge of process waste water pollutants to navigable waters.

§ 426.34 Pretreatment standards for existing sources.

Any existing source subject to this subpart that introduces process wastewater pollutants into a publicly owned treatment works must comply with 40 CFR part 403. In addition, the following pretreatment standard establishes the quantity or quality of pollutants or pollutant properties controlled by this section which may be discharged to a publicly owned treatment works by a point source subject to the provisions of this subpart.

Pollutant or pollutant property	Pretreatment standard
pH	No limitation.
TSS	Do.

[40 FR 6444, Feb. 11, 1975, as amended at 60 FR 33958, June 29, 1995]

§ 426.35 Standards of performance for new sources.

The following standards of performance establish the quantity or quality of pollutants or pollutant properties which may be discharged by a new source subject to the provisions of this subpart: There shall be no discharge of process waste water pollutants to navigable waters.

§ 426.36 Pretreatment standards for new sources.

Any new source subject to this subpart that introduces process wastewater pollutants into a publicly owned treatment works must comply with 40 CFR part 403.

[60 FR 33958, June 29, 1995]

§ 426.37 Effluent limitations guidelines representing the degree of effluent reduction attainable by the application of the best conventional pollutant control technology.

The following limitations establish the quantity or quality of pollutants or pollutant properties, which may be discharged by a point source subject to the provisions of this subpart after application of the best conventional pollutant control technology: There shall be no discharge of process waste water pollutants to navigable waters.

[44 FR 50746, Aug. 29, 1979]

Subpart D—Plate Glass Manufacturing Subcategory

SOURCE: 39 FR 5714, Feb. 14, 1974, unless otherwise noted.

§ 426.40 Applicability; description of the plate glass manufacturing subcategory.

The provisions of this subpart are applicable to discharges of pollutants resulting from the process in which several mineral ingredients (sand, soda ash, limestone, dolomite, cullet and other ingredients) are melted in a furnace, pressed between rollers, and finally ground and polished to form plate glass.

§ 426.41 Specialized definitions.

For the purpose of this subpart:

(a) Except as provided below, the general definitions, abbreviations and methods of analysis set forth in 40 CFR part 401 shall apply to this subpart.

(b) The term ''cullet'' shall mean any broken glass generated in the manufacturing process.

§ 426.42 Effluent limitations guidelines representing the degree of effluent reduction attainable by the application of the best practicable control technology currently available.

Except as provided in §§ 125.30 through 125.32, any existing point source subject to this subpart shall achieve the following effluent limitations representing the degree of effluent reduction attainable by the application of the best practicable control technology currently available (BPT):

Effluent characteristic	Effluent limitations	
	Maximum for any 1 day	Average of daily values for 30 consecutive days shall not exceed—
	Metric units (kg/kkg of product)	
TSS	2.76	.138
pH	(1)	(1)
	English units (lb/ton of product)	
TSS	5.52	2.76
pH	(1)	(1)

[1] Within the range 6.0 to 9.0.

[39 FR 5714, Feb. 14, 1974, as amended at 60 FR 33958, June 29, 1995]

§ 426.43 [Reserved]

§ 426.44 Pretreatment standards for existing sources.

Any existing source subject to this subpart that introduces process wastewater pollutants into a publicly owned treatment works must comply with 40 CFR part 403. In addition, the following pretreatment standard establishes the quantity or quality of pollutants or pollutant properties controlled by this section which may be discharged to a publicly owned treatment works by a point source subject to the provisions of this subpart.

Pollutant or pollutant property	Pretreatment standard
pH	No limitation.
TSS	Do.

[40 FR 6444, Feb. 11, 1975, as amended at 60 FR 33958, June 29, 1995]

§ 426.45 Standards of performance for new sources.

The following standards of performance establish the quantity or quality of pollutants or pollutant properties which may be discharged by a new source subject to the provisions of this subpart: There shall be no discharge of process waste water pollutants to navigable waters.

§ 426.46 Pretreatment standards for new sources.

Any new source subject to this subpart that introduces process wastewater pollutants into a publicly owned treatment works must comply with 40 CFR part 403.

[60 FR 33958, June 29, 1995]

§ 426.47 Effluent limitations guidelines representing the degree of effluent reduction attainable by the application of the best conventional pollutant control technology (BCT).

Except as provided in §§ 125.30 through 125.32, any existing point source subject to this subpart shall achieve the following effluent limitations representing the degree of effluent reduction attainable by the application of the best conventional pollutant control technology (BCT): The limitations shall be the same as those specified for conventional pollutants (which are defined in § 401.16) in § 426.42 of this subpart for the best practicable control technology currently available (BPT).

[51 FR 25000, July 9, 1986]

Subpart E—Float Glass Manufacturing Subcategory

SOURCE: 39 FR 5714, Feb. 14, 1974, unless otherwise noted.

§ 426.50 Applicability; description of the float glass manufacturing subcategory.

The provisions of this subpart are applicable to discharges of pollutants resulting from the process in which several mineral ingredients (sand, soda ash, limestone, dolomite, cullet, and other ingredients) are mixed, melted in a furnace, and floated on a molten tin bath to produce float glass.

§ 426.51 Specialized definitions.

For the purpose of this subpart:

(a) Except as provided below, the general definitions, abbreviations and methods of analysis set forth in 40 CFR part 401 shall apply to this subpart.

§ 426.52 Effluent limitations guidelines representing the degree of effluent reduction attainable by the application of the best practicable control technology currently available.

Except as provided in §§ 125.30 through 125.32, any existing point source subject to this subpart shall

achieve the following effluent limitations representing the degree of effluent reduction attainable by the application of the best practicable control technology currently available (BPT):

Effluent characteristic	Effluent limitations	
	Maximum for any 1 day	Average of daily values for 30 consecutive days shall not exceed—
	Metric units (q/kkg of product)	
TSS	2.00	2.00
Oil	1.40	1.40
Phosphorus	0.05	.05
pH	(1)	(1)
	English units (lb/ton of product)	
TSS	0.0040	0.0040
Oil	0.0028	.0028
Phosphorus	0.0001	.0001
pH	(1)	(1)

[1] Within the range 6.0 to 9.0.

[39 FR 5714, Feb. 14, 1974, as amended at 60 FR 33958, June 29, 1995]

§ 426.53 Effluent limitations guidelines representing the degree of effluent reduction attainable by the application of the best available technology economically achievable.

The following limitations establish the quantity or quality of pollutants or pollutant properties, controlled by this section, which may be discharged by a point source subject to the provisions of this subpart after application of the best available technology economically achievable:

Effluent characteristic	Effluent limitations	
	Maximum for any 1 day	Average of daily values for 30 consecutive days shall not exceed—
	Metric units (g/kg of product)	
Phosphorus	0.05	.05
	English units (lb/ton of product)	
Phosphorus	0.0001	.0001

[39 FR 5714, Feb. 14, 1974, as amended at 44 FR 50746, Aug. 29, 1979]

§ 426.54 [Reserved]

§ 426.55 Standards of performance for new sources.

The following standards of performance establish the quantity or quality of pollutants or pollutant properties, controlled by this section, which may be discharged by a new source subject to the provisions of this subpart:

Effluent characteristic	Effluent limitations	
	Maximum for any 1 day	Average of daily values for 30 consecutive days shall not exceed—
	Metric units (g/kkg of product)	
TSS	0.70	0.70
Oil	1.40	1 .40
Phosphorus	0.05	.05
pH	(1)	(1)
	English units (lb/ton of product)	
TSS	0.0014	0.0014
Oil	0.0028	.0028
Phosphorus	0.0001	.0001
pH	(1)	(1)

[1] Within the range 6.0 to 9.0.

§ 426.56 Pretreatment standards for new sources.

Any new source subject to this subpart that introduces process wastewater pollutants into a publicly owned treatment works must comply with 40 CFR part 403.

[60 FR 33958, June 29, 1995]

§ 426.57 Effluent limitations guidelines representing the degree of effluent reduction attainable by the application of the best conventional pollutant control technology.

Except as provided in §§ 125.30 through 125.32, any existing point source subject to this subpart shall achieve the following effluent limitations representing the degree of effluent reduction attainable by the application of the best conventional pollutant control technology (BCT): The limitations shall be the same as those specified for conventional pollutants (which are defined in § 401.16) in § 426.52 of this subpart for the best practicable control technology currently available (BPT).

[51 FR 25000, July 9, 1986]

Subpart F—Automotive Glass Tempering Subcategory

SOURCE: 39 FR 5714, Feb. 14, 1974, unless otherwise noted.

§ 426.60 Applicability; description of the automotive glass tempering subcategory.

The provisions of this subpart are applicable to discharges of pollutants resulting from the processes in which glass is cut and then passed through a series of processes that grind and polish the edges, bend the glass, and then temper the glass to produce side and back windows for automobiles.

§ 426.61 Specialized definitions.

For the purpose of this subpart:

(a) Except as provided below, the general definitions, abbreviations and methods of analysis set forth in 40 CFR part 401 shall apply to this subpart.

(b) The term ''tempering'' shall mean the process whereby glass is heated near the melting point and then rapidly cooled to increase its mechanical and thermal endurance.

§ 426.62 Effluent limitations guidelines representing the degree of effluent reduction attainable by the application of the best practicable control technology currently available.

Except as provided in §§ 125.30 through 125.32, any existing point source subject to this subpart shall achieve the following effluent limitations representing the degree of effluent reduction attainable by the application of the best practicable control technology currently available (BPT):

Effluent characteristic	Effluent limitations	
	Maximum for any 1 day	Average of daily values for 30 consecutive days shall not exceed—
	Metric units (q/sq m of product)	
TSS	1.95	1.22
Oil	0.64	.64
pH	(1)	(1)
	English units (lb/1,060 sq ft of product)	
TSS	0.40	0.25
Oil	0.13	.13
pH	(1)	(1)

[1] Within the range 6.0 to 9.0.

[39 FR 5714, Feb. 14, 1974, as amended at 60 FR 33959, June 29, 1995]

§ 426.63 [Reserved]

§ 426.64 Pretreatment standards for existing sources.

Any existing source subject to this subpart that introduces process wastewater pollutants into a publicly owned treatment works must comply with 40 CFR part 403. In addition, the following pretreatment standard establishes the quantity or quality of pollutants or pollutant properties controlled by this section which may be discharged to a publicly owned treatment works by a point source subject to the provisions of this subpart.

Pollutant or pollutant property	Pretreatment standard
pH	No limitation.
Oil	Do.
TSS	Do.

[40 FR 6444, Feb. 11, 1975, as amended at 60 FR 33959, June 29, 1995]

§ 426.65 Standards of performance for new sources.

The following standards of performance establish the quantity or quality of pollutants or pollutant properties, controlled by this section, which may be discharged by a new source subject to the provisions of this subpart:

Effluent characteristic	Effluent limitations	
	Maximum for any 1 day	Average of daily values for 30 consecutive days shall not exceed—
	Metric units (q/sq m of product)	
TSS	0.24	0.24
Oil	0.49	.49
pH	(1)	(1)
	English units (lb/1,000 sq ft of product)	
TSS	0.05	0.05
Oil	0.10	.10
pH	(1)	(1)

[1] Within the range 6.0 to 9.0.

§ 426.66 Pretreatment standards for new sources.

Any new source subject to this subpart that introduces process wastewater pollutants into a publicly owned treatment works must comply with 40 CFR part 403.

[60 FR 33959, June 29, 1995]

§ 426.67 Effluent limitations guidelines representing the degree of effluent reduction attainable by the application of the best conventional pollutant control technology.

Except as provided in §§ 125.30 through 125.32, any existing point source subject to this subpart shall achieve the following effluent limitations representing the degree of effluent reduction attainable by the application of the best conventional pollutant control technology (BCT): The limitations shall be the same as those specified for conventional pollutants (which are defined in § 401.16) in § 426.62 of this subpart for the best practicable control technology currently available (BPT).

[51 FR 25000, July 9, 1986]

Subpart G—Automotive Glass Laminating Subcategory

SOURCE: 39 FR 5714, Feb. 14, 1974, unless otherwise noted.

§ 426.70 Applicability; description of the automotive glass laminating subcategory.

The provisions of this subpart are applicable to discharges of pollutants resulting from the processes which laminate a plastic sheet between two layers of glass, and which prepare the glass for lamination such as cutting, bending and washing, to produce automobile windshields.

§ 426.71 Specialized definitions.

For the purpose of this subpart:

(a) Except as provided below, the general definitions, abbreviations and methods of analysis set forth in 40 CFR part 401 shall apply to this subpart.

§ 426.72 Effluent limitations guidelines representing the degree of effluent reduction attainable by the application of the best practicable control technology currently available.

Except as provided in §§ 125.30 through 125.32, any existing point source subject to this subpart shall achieve the following effluent limitations representing the degree of effluent reduction attainable by the application of the best practicable control technology currently available (BPT):

Effluent characteristic	Effluent limitations	
	Maximum for any 1 day	Average of daily values for 30 consecutive days shall not exceed—
	Metric units (q/sq m of product)	
TSS	4.40	4.40
Oil	1.76	1.76
Phosphorus	1.07	1.07
pH	(1)	(1)
	English units (lb/1,000 sq ft of product)	
TSS	0.90	0.90
Oil	0.36	.36
Phosphorus	0.22	.22
pH	(1)	(1)

[1] Within the range 6.0 to 9.0.

[39 FR 5714, Feb. 14, 1974, as amended at 60 FR 33959, June 29, 1995]

§ 426.73 Effluent limitations guidelines representing the degree of effluent reduction attainable by the application of the best available technology economically achievable.

The following limitations establish the quantity or quality of pollutants or pollutant properties, controlled by this section, which may be discharged by a point source subject to the provisions of this subpart after application of the best available technology economically achievable:

Effluent characteristic	Effluent limitations	
	Maximum for any 1 day	Average of daily values for 30 consecutive days shall not exceed—
	Metric units (q/sq m of products)	
Phosphorus	0.30	.30
	English units (lb/1,000 sq ft of product)	
Phosphorus	0.06	.06

[39 FR 5714, Feb. 14, 1974, as amended at 44 FR 50746, Aug. 29, 1979]

§ 426.74 [Reserved]

§ 426.75 Standards of performance for new sources.

The following standards of performance establish the quantity or quality of pollutants or pollutant properties, controlled by this section, which may be discharged by a new point source subject to the provisions of this subpart:

Effluent characteristic	Effluent limitations	
	Maximum for any 1 day	Average of daily values for 30 consecutive days shall not exceed—
	Metric units (q/sq m of product)	
TSS	0.88	0.88
Oil	1.76	1.76
Phosphorus	0.30	.30
pH	(1)	(1)
	English units (lb/1,000 lb of product)	
TSS	0.18	0.18
Oil	0.36	.36
Phosphorus	0.06	.06
pH	(1)	(1)

[1] Within the range 6.0 to 9.0.

§ 426.76 Pretreatment standards for new sources.

Any new source subject to this subpart that introduces process wastewater pollutants into a publicly owned treatment works must comply with 40 CFR part 403.

[60 FR 33959, June 29, 1995]

§ 426.77 Effluent limitations guidelines representing the degree of effluent reduction attainable by the application of the best conventional pollutant control technology.

Except as provided in §§ 125.30 through 125.32, any existing point source subject to this subpart shall achieve the following effluent limitations representing the degree of effluent reduction attainable by the application of the best conventional pollutant control technology (BCT): The limitations shall be the same as those specified for conventional pollutants (which are defined in § 401.16) in § 426.72 of this subpart for the best practicable control technology currently available (BPT).

[51 FR 25000, July 9, 1986]

Subpart H—Glass Container Manufacturing Subcategory

SOURCE: 40 FR 2956, Jan. 16, 1975, unless otherwise noted.

§ 426.80 Applicability; description of the glass container manufacturing subcategory.

The provisions of this subpart are applicable to discharges resulting from the process by which raw materials are melted in a furnace and mechanically processed into glass containers.

§ 426.81 Specialized definitions.

For the purpose of this subpart:

(a) Except as provided below, the general definitions, abbreviations and methods of analysis set forth in part 401 of this chapter shall apply to this subpart.

(b) The term ''furnace pull'' shall mean that amount of glass drawn from the glass furnace or furnaces.

(c) The term ''oil'' shall mean those components of a waste water amenable to measurement by the technique or techniques described in the most recent addition of ''Standard Methods'' for the analysis of grease in polluted waters, waste waters, and effluents, such as ''Standard Methods,'' 13th Edition, 2nd Printing, page 407.

§ 426.82 Effluent limitations guidelines representing the degree of effluent reduction attainable by the application of the best practicable control technology currently available.

Except as provided in §§ 125.30 through 125.32, any existing point source subject to this subpart shall achieve the following effluent limitations representing the degree of effluent reduction attainable by the application of the best practicable control technology currently available (BPT):

Effluent characteristic	Effluent limitations	
	Maximum for any 1 day	Average of daily values for 30 consecutive days shall not exceed—
	Metric units (g/kkg of furnace pull)	
Oil	60.0	30.0
TSS	140.0	70.0
pH	(1)	(1)
	English units (lb/1,000 lb of furnace pull)	
Oil	0.06	0.03
TSS	0.14	0.07
pH	(1)	(1)

[1] Within the range 6.0 to 9.0.

[40 FR 2956, Jan. 16, 1975, as amended at 60 FR 33959, June 29, 1995]

§§ 426.83–426.84 [Reserved]

§ 426.85 Standards of performance for new sources.

The following standards of performance establish the quantity or quality of pollutants or pollutant properties, controlled by this section, which may be discharged by a new source subject to the provisions of this subpart:

Effluent characteristic	Effluent limitations	
	Maximum for any 1 day	Average of daily values for 30 consecutive days shall not exceed—
	Metric units (g/kkg of furnace pull)	
Oil	1.6	0.8
TSS	1.6	0.8
pH	(1)	(1)
	English units (lb/1,000 lb of furnace pull)	
Oil	0.0016	0.0008
TSS	0.0016	0.0008
pH	(1)	(1)

[1] Within the range 6.0 to 9.0.

§ 426.86 Pretreatment standards for new sources.

Any new source subject to this subpart that introduces process wastewater pollutants into a publicly owned treatment works must comply with 40 CFR part 403. In addition, the following pretreatment standard establishes the quantity or quality of pollutants or

pollutant properties controlled by this section which may be discharged to a publicly owned treatment works by a new point source subject to the provisions of this subpart. Because of the recognition that animal and vegetable oils can be adequately removed in a publicly owned treatment works, whereas mineral oil may not be readily removed and may pass through untreated, two separate limitations are established.

Pollutant or pollutant property	Pretreatment standards	
	Maximum for any 1 day	Average of daily values for 30 consecutive days shall not exceed—
	Metric units (g/kkg of furnace pull)	
Oil (animal and vegetable)	(1)	(1)
Oil (mineral)	60.0	30.0
TSS	(1)	(1)
pH	(1)	(1)
	English units (lb/1,000 lb of furnace pull)	
Oil (animal and vegetable)	(1)	(1)
Oil (mineral)	0.06	0.03
TSS	(1)	(1)
pH	(1)	(1)

[1] No limitation.

[40 FR 2956, Jan. 16, 1975, as amended at 60 FR 33959, June 29, 1995]

§ 426.87 Effluent limitations guidelines representing the degree of effluent reduction attainable by the application of the best conventional pollutant control technology.

Except as provided in §§ 125.30 through 125.32, any existing point source subject to this subpart shall achieve the following effluent limitations representing the degree of effluent reduction attainable by the application of the best conventional pollutant control technology (BCT): The limitations shall be the same as those specified for conventional pollutants (which are defined in § 401.16) in § 426.82 of this subpart for the best practicable control technology currently available (BPT).

[51 FR 25000, July 9, 1986]

Subpart I—Machine Pressed and Blown Glass Manufacturing Subcategory [Reserved]

Subpart J—Glass Tubing (Danner) Manufacturing Subcategory

SOURCE: 40 FR 2957, Jan. 16, 1975, unless otherwise noted.

§ 426.100 Applicability; description of the glass tubing (Danner) manufacturing subcategory.

The provisions of this subpart are applicable to discharges resulting from the process by which raw materials are melted in a furnace and glass tubing mechanically drawn from the furnace horizontally by means of the Danner process, which requires the intermittent quenching of cullet.

§ 426.101 Specialized definitions.

For the purpose of this subpart:

(a) Except as provided below, the general definitions, abbreviations and methods of analysis set forth in part 401 of this chapter shall apply to this subpart.

(b) The term ''furnace pull'' shall mean that amount of glass drawn from the glass furnace or furnaces.

(c) The term ''cullet'' shall mean any excess glass generated in the manufacturing process.

§ 426.102 Effluent limitations guidelines representing the degree of effluent reduction attainable by the application of the best practicable control technology currently available.

Except as provided in §§ 125.30 through 125.32, any existing point source subject to this subpart shall achieve the following effluent limitations representing the degree of effluent reduction attainable by the application of the best practicable control technology currently available (BPT):

Effluent characteristic	Effluent limitations	
	Maximum for any 1 day	Average of daily values for 30 consecutive days shall not exceed—
	Metric units (g/kkg of furnace pull)	
TSS	460.0	230.0
pH	(1)	(1)
	English units (lb/1,000 lb of furnace pull)	
TSS	0.46	0.23
pH	(1)	(1)

[1] Within the range 6.0 to 9.0.

[40 FR 2957, Jan. 16, 1975, as amended at 60 FR 33959, June 29, 1995]

§§ 426.103–426.104 [Reserved]

§ 426.105 Standards of performance for new sources.

The following standards of performance establish the quantity or quality of pollutants or pollutant properties, controlled by this section, which may be discharged by a new source subject to the provisions of this subpart:

Effluent characteristic	Effluent limitations	
	Maximum for any 1 day	Average of daily values for 30 consecutive days shall not exceed—
	Metric units (g/kkg of furnace pull)	
TSS	0.4	0.2
pH	(1)	(1)
	English units (lb/1,000 lb of furnace pull)	
TSS	0.0004	0.0002
pH	(1)	(1)

[1] Within the range 6.0 to 9.0.

§ 426.106 Pretreatment standards for new sources.

Any new source subject to this subpart that introduces process wastewater pollutants into a publicly owned treatment works must comply with 40 CFR part 403. In addition, the following pretreatment standard establishes the quantity or quality of pollutants or pollutant properties controlled by this section which may be discharged to a publicly owned treatment works by a new point source subject to the provisions of this subpart.

Pollutant or pollutant property	Pretreatment standard
pH	No limitation.
TSS	Do.

[40 FR 2957, Jan. 16, 1975, as amended at 60 FR 33959, June 29, 1995]

§ 426.107 Effluent limitations guidelines representing the degree of effluent reduction attainable by the application of the best conventional pollutant control technology.

Except as provided in §§ 125.30 through 125.32, any existing point source subject to this subpart shall achieve the following effluent limitations representing the degree of effluent reduction attainable by the application of the best conventional pollutant control technology (BCT): The limitations shall be the same as those specified for conventional pollutants (which are defined in § 401.16) in § 426.102 of this subpart for the best practicable control technology currently available (BPT).

[51 FR 25000, July 9, 1986]

Subpart K—Television Picture Tube Envelope Manufacturing Subcategory

SOURCE: 40 FR 2957, Jan. 16, 1975, unless otherwise noted.

§ 426.110 Applicability; description of the television picture tube envelope manufacturing subcategory.

The provisions of this subpart are applicable to discharges resulting from the process by which raw materials are melted in a furnace and processed into television picture tube envelopes.

§ 426.111 Specialized definitions.

For the purpose of this subpart:

(a) Except as provided below, the general definitions, abbreviations and methods of analysis set forth in part 401 of this chapter shall apply to this subpart.

(b) The term ''furnace pull'' shall mean that amount of glass drawn from the glass furnace or furnaces.

(c) The term ''oil'' shall mean those components of a waste water amenable

to measurement by the technique or techniques described in the most recent addition of ''Standard Methods'' for the analysis of grease in polluted waters, waste waters, and effluents, such as ''Standard Methods,'' 13th Edition, 2nd Printing, page 407.

§ 426.112 Effluent limitations guidelines representing the degree of effluent reduction attainable by the application of the best practicable control technology currently available.

Except as provided in §§ 125.30 through 125.32, any existing point source subject to this subpart shall achieve the following effluent limitations representing the degree of effluent reduction attainable by the application of the best practicable control technology currently available (BPT). (The fluoride and lead limitations are applicable to the abrasive polishing and acid polishing waste water streams while the TSS, oil, and pH limitations are applicable to the entire process waste water stream):

Effluent characteristic	Effluent limitations	
	Maximum for any 1 day	Average of daily values for 30 consecutive days shall not exceed—
	Metric units (g/kkg of furnace pull)	
Oil	260.0	130.0
TSS	300.0	150.0
Fluoride	140.0	70.0
Lead	39.0	4.5
pH	(1)	(1)
	English units (lb/1,000 lb of furnace pull)	
Oil	0.26	0.13
TSS	0.30	0.15
Fluoride	0.14	0.07
Lead	0.009	0.0045
pH	(1)	(1)

[1] Within the range 6.0 to 9.0.

[40 FR 2957, Jan. 16, 1975, as amended at 60 FR 33959, June 29, 1995]

§ 426.113 Effluent limitations guidelines representing the degree of effluent reduction attainable by the application of the best available technology economically achievable.

The following limitations establish the quantity or quality of pollutants or pollutant properties, controlled by this section, which may be discharged by a point source subject to the provisions of this subpart after application of the best available technology economically achievable. These limitations are applicable to the abrasive polishing and acid polishing waste water streams.

Effluent characteristic	Effluent limitations	
	Maximum for any 1 day	Average of daily values for 30 consecutive days shall not exceed—
	Metric units (g/kkg of furnace pull)	
Fluoride	120.0	60.0
Lead	0.9	0.45
	English units (lb/1,000 lb of furnace pull)	
Fluoride	0.12	0.06
Lead	0.0009	0.00045

[44 FR 50747, Aug. 29, 1979]

§ 426.114 [Reserved]

§ 426.115 Standards of performance for new sources.

The following standards of performance establish the quantity or quality of pollutants or pollutant properties, controlled by this section, which may be discharged by a new source subject to the provisions of this subpart (the fluoride and lead limitations are applicable to the abrasive polishing and acid polishing waste water streams while the TSS, oil, and pH limitations are applicable to the entire process waste water stream):

Effluent characteristic	Effluent limitations	
	Maximum for any 1 day	Average of daily values for 30 consecutive days shall not exceed—
	Metric units (g/kkg of furnace pull)	
Oil	260.0	130.0
TSS	260.0	130.0
Fluoride	120.0	60.0
Lead	30.9	0.45
pH	(1)	(1)
	English units (lb/1,000 lb of furnace pull)	
Oil	0.26	0.13
TSS	0.26	0.13
Fluoride	0.12	0.06
Lead	0.0009	0.00045
pH	(1)	(1)

[1] Within the range 6.0 to 9.0.

Pollutant or pollutant property	Pretreatment standards	
	Maximum for any 1 day	Average of daily values for 30 consecutive days shall not exceed—
	Metric units (g/kkg of furnace pull)	
Oil (animal and vegetable)	(1)	(1)
Oil (mineral)	260.0	130.0
TSS	(1)	(1)
Fluoride	120.0	60.0
Lead	(1)	(1)
pH	(1)	(1)
	English units (lb/1,000 lb of furnace pull)	
Oil (animal and vegetable)	(1)	(1)
Oil	0.26	0.13
TSS	(1)	(1)
Fluoride	0.12	0.06
Lead	(1)	(1)
pH	(1)	(1)

[1] No limitation.

§ 426.116 Pretreatment standards for new sources.

Any new source subject to this subpart that introduces process wastewater pollutants into a publicly owned treatment works must comply with 40 CFR part 403. In addition, the following pretreatment standard establishes the quantity or quality of pollutants or pollutant properties controlled by this section which may be discharged to a publicly owned treatment works by a new point source subject to the provisions of this subpart. Because of the recognition that animal and vegetable oils can be adequately removed in a publicly owned treatment works, whereas mineral oil may not be readily removed and may pass through untreated, two separate limitations are established.

[40 FR 2957, Jan. 16, 1975, as amended at 60 FR 33959, June 29, 1995]

§ 426.117 Effluent limitations guidelines representing the degree of effluent reduction attainable by the application of the best conventional pollutant control technology.

Except as provided in §§ 125.30 through 125.32, any existing point source subject to this subpart shall achieve the following effluent limitations representing the degree of effluent reduction attainable by the application of the best conventional pollutant control technology (BCT): The limitations shall be the same as those specified for conventional pollutants (which are defined in § 401.16) in § 426.112 of this subpart for the best practicable control technology currently available (BPT).

[51 FR 25000, July 9, 1986]

Subpart L—Incandescent Lamp Envelope Manufacturing Subcategory

SOURCE: 40 FR 2959, Jan. 16, 1975, unless otherwise noted.

§ 426.120 Applicability; description of the incandescent lamp envelope manufacturing subcategory.

The provisions of this subpart are applicable to discharges resulting from

the processes by which (a) raw materials are melted in a furnace and mechanically processed into incandescent lamp envelopes or (b) incandescent lamp envelopes are etched with hydrofluoric acid to produce frosted envelopes.

§ 426.121 Specialized definitions.

For the purpose of this subpart:

(a) Except as provided below, the general definitions, abbreviations and methods of analysis set forth in part 401 of this chapter shall apply to this subpart.

(b) The term ''furnace pull'' shall mean that amount of glass drawn from the glass furnace or furnaces.

(c) The term ''oil'' shall mean those components of a waste water amenable to measurement by the technique or techniques described in the most recent addition of ''Standard Methods'' for the analysis of grease in polluted waters, waste waters, and effluents, such as ''Standard Methods,'' 13th Edition, 2nd Printing, page 407.

(d) The term ''product frosted'' shall mean that portion of the ''furnace pull'' associated with the fraction of finished incandescent lamp envelopes which is frosted; this quantity shall be calculated by multiplying ''furnace pull'' by the fraction of finished incandescent lamp envelopes which is frosted.

§ 426.122 Effluent limitations guidelines representing the degree of effluent reduction attainable by the application of the best practicable control technology currently available.

Except as provided in §§ 125.30 through 125.32, any existing point source subject to this subpart shall achieve the following effluent limitations representing the degree of effluent reduction attainable by the application of the best practicable control technology currently available (BPT):

(a) Any manufacturing plant which produces incandescent lamp envelopes shall meet the following limitations with regard to the forming operations.

Effluent characteristic	Effluent limitations	
	Maximum for any 1 day	Average of daily values for 30 consecutive days shall not exceed—
	Metric units (g/kkg of furnace pull)	
Oil	230.0	115.0
TSS	230.0	115.0
pH	(1)	(1)
	English units (lb/1,000 lb of furnace pull)	
Oil	0.23	0.115
TSS	0.23	0.115
pH	(1)	(1)

[1] Within the range 6.0 to 9.0.

(b) Any manufacturing plant which frosts incandescent lamp envelopes shall meet the following limitations with regard to the finishing operations.

Effluent characteristic	Effluent limitations	
	Maximum for any 1 day	Average of daily values for 30 consecutive days shall not exceed—
	Metric units (g/kkg of product frosted)	
Fluoride	230.0	115.0
Ammonia	(1)	(1)
TSS	460.0	230.0
pH	(2)	(2)
	English units (lb/1000 lb of product frosted)	
Fluoride	0.23	0.115
Ammonia	(1)	(1)
TSS	0.46	0.23
pH	(2)	(2)

[1] No limitation.
[2] Within the range 6.0 to 9.0.

[40 FR 2959, Jan. 16, 1975, as amended at 60 FR 33960, June 29, 1995]

§ 426.123 Effluent limitations guidelines representing the degree of effluent reduction attainable by the application of the best available technology economically achievable.

Except as provided in §§ 125.30 through 125.32, the following limitations establish the quantity or quality of pollutants or pollutant properties, controlled by this section, which may be discharged by a point source subject

to the provisions of this subpart after application of the best available technology economically achievable:

(a) [Reserved]

(b) Any manufacturing plant which frosts incandescent lamp envelopes shall meet the following limitations with regard to the finishing operations.

Effluent characteristic	Effluent limitations	
	Maximum for any 1 day	Average of daily values for 30 consecutive days shall not exceed—
	Metric units (g/kkg of product frosted)	
Fluoride	104.0	52.0
Ammonia	240.0	120.0
	English units (lb/1,000 lb of product frosted)	
Fluoride	0.104	0.052
Ammonia	0.24	0.12

[51 FR 25001, July 9, 1986]

§ 426.124 [Reserved]

§ 426.125 Standards of performance for new sources.

The following standards of performance establish the quantity or quality of pollutants or pollutant properties, controlled by this section, which may be discharged by a new source subject to the provisions of this subpart:

(a) Any manufacturing plant which produces incandescent lamp envelopes shall meet the following limitations with regard to the forming operations.

Effluent characteristic	Effluent limitations	
	Maximum for any 1 day	Average of daily values for 30 consecutive days shall not exceed—
	Metric units (g/kkg of furnace pull)	
Oil	90.0	45.0
TSS	90.0	45.0
pH	(1)	(1)
	English units (lb/1,000 lb of furnace pull)	
Oil	0.09	0.045
TSS	0.09	0.045
pH	(1)	(1)

[1] Within the range 6.0 to 9.0.

(b) Any manufacturing plant which frosts incandescent lamp envelopes shall meet the following limitations with regard to the finishing operations.

Effluent characteristic	Effluent limitations	
	Maximum for any 1 day	Average of daily values for 30 consecutive days shall not exceed—
	Metric units (g/kkg of product frosted)	
Fluoride	104.0	52.0
Ammonia	240.0	120.0
TSS	80.0	40.0
pH	(1)	(1)
	English units (lb/1,000 lb of product frosted)	
Fluoride	0.104	0.052
Ammonia	0.24	0.12
TSS	0.08	0.04
pH	(1)	(1)

[1] Within the range 6.0 to 9.0.

§ 426.126 Pretreatment standards for new sources.

Any new source subject to this subpart that introduces process wastewater pollutants into a publicly owned treatment works must comply with 40 CFR part 403. In addition, the following pretreatment standard establishes the quantity or quality of pollutants or pollutant properties controlled by this section which may be discharged to a publicly owned treatment works by a new point source subject to the provisions of this subpart. Because of the recognition that animal and vegetable oils can be adequately removed in a

publicly owned treatment works, whereas mineral oil may not be readily removed and may pass through untreated, two separate limitations are established.

Pollutant or pollutant property	Pretreatment standards	
	Maximum for any 1 day	Average of daily values for 30 consecutive days shall not exceed—
	Metric units (g/kkg of furnace pull)	
Oil (animal and vegetable)	(1)	(1)
Oil (mineral)	230.0	115.0
TSS	(1)	(1)
pH	(1)	(1)
	English units (lb/1,000 lb of furnace pull)	
Oil (animal and vegetable)	(1)	(1)
Oil (mineral)	0.23	0.115
TSS	(1)	(1)
pH	(1)	(1)
	Metric units (g/kkg of product frosted)	
Fluoride	104.0	52.0
Ammonia	(1)	(1)
TSS	(1)	(1)
pH	(1)	(1)
	English units (lb/1,000 lb of product frosted)	
Fluoride	0.104	0.052
Ammonia	(1)	(1)
TSS	(1)	(1)
pH	(1)	(1)

[1] No limitation.

[40 FR 2959, Jan. 16, 1975, as amended at 60 FR 33960, June 29, 1995]

§ 426.127 Effluent limitations guidelines representing the degree of effluent reduction attainable by the application of the best conventional pollutant control technology.

Except as provided in §§ 125.30 through 125.32, any existing point source subject to this subpart shall achieve the following effluent limitations representing the degree of effluent reduction attainable by the application of the best conventional pollutant control technology (BCT): The limitations shall be the same as those specified for conventional pollutants (which are defined in § 401.16) in § 426.122 of this subpart for the best practicable control technology currently available (BPT).

[51 FR 25000, July 9, 1986]

Subpart M—Hand Pressed and Blown Glass Manufacturing Subcategory

SOURCE: 40 FR 2960, Jan. 16, 1975, unless otherwise noted.

§ 426.130 Applicability; description of the hand pressed and blown glass manufacturing subcategory.

The provisions of this subpart are applicable to discharges resulting from the process by which raw materials are melted in a furnace and processed by hand into pressed or blown glassware. This includes those plants which:

(a) Produce leaded glass and employ hydrofluoric acid finishing techniques,

(b) Produce non-leaded glass and employ hydrofluoric acid finishing techniques, or

(c) Produce leaded or non-leaded glass and do not employ hydrofluoric acid finishing techniques.

§ 426.131 Specialized definitions.

For the purpose of this subpart:

(a) Except as provided below, the general definitions, abbreviations and methods of analysis set forth in part 401 of this chapter shall apply to this subpart.

§ 426.132 Effluent limitations guidelines representing the degree of effluent reduction attainable by the application of the best practicable control technology currently available.

Except as provided in §§ 125.30 through 125.32, any existing point source subject to this subpart shall achieve the following effluent limitations representing the degree of effluent reduction attainable by the application of the best practicable control technology currently available (BPT):

(a) Any plant which melts raw materials, produces hand pressed or blown leaded glassware, employs hydrofluoric acid finishing techniques, and discharges greater than 50 gallons per day of process waste water, shall meet the following limitations.

Effluent characteristic	Effluent limitations
Lead	No limitation.
Fluoride	Do.
TSS	Do.
pH	Do.

(b) Any plant which melts raw materials, produces non-leaded hand pressed or blown glassware, discharges greater than 50 gallons per day of process waste water, and employs hydrofluoric acid finishing techniques shall meet the following limitations.

Effluent characteristic	Effluent limitations
Fluoride	No limitation.
TSS	Do.
pH	Do.

(c) Any plant which melts raw materials, produces leaded or non-leaded hand pressed or blown glassware, discharges greater than 50 gallons per day of process waste water, and does not employ hydrofluoric acid finishing techniques shall meet the following limitations.

Effluent characteristic	Effluent limitations
TSS	No limitation.
pH	Do.

[40 FR 2960, Jan. 16, 1975, as amended at 60 FR 33960, June 29, 1995]

§ 426.133 Effluent limitations guidelines representing the degree of effluent reduction attainable by the application of the best available technology economically achievable.

The following limitations establish the quantity or quality of pollutants or pollutant properties, controlled by this section, which may be discharged by a point source subject to the provisions of this subpart after application of the best available technology economically achievable:

(a) Any plant which melts raw materials, produces hand pressed or blown leaded glassware, discharges greater than 50 gallons per day of process waste water, and employs hydrofluoric acid finishing techniques shall meet the following limitations.

Effluent characteristic	Effluent limitations (mg/l)	
	Maximum for any 1 day	Average of daily values for 30 consecutive days shall not exceed—
Lead	0.2	0.1
Fluoride	26.0	13.0

(b) Any plant which melts raw materials, produces non-leaded hand pressed or blown glassware, discharges greater than 50 gallons per day of process waste water, and employs hydrofluoric acid finishing techniques shall meet the following limitations.

Effluent characteristic	Effluent limitations (mg/l)	
	Maximum for any 1 day	Average of daily values for 30 consecutive days shall not exceed—
Fluoride	26.0	13.0

[44 FR 50747, Aug. 29, 1979, as amended at 51 FR 25001, July 9, 1986]

§ 426.134 [Reserved]

§ 426.135 Standards of performance for new sources.

The following standards of performance establish the quantity or quality of pollutants or pollutant properties, controlled by this section, which may be discharged by a new source subject to the provisions of this subpart:

(a) Any plant which melts raw materials, produces hand pressed or blown leaded glassware, discharges greater than 50 gallons per day of process waste water, and employs hydrofluoric acid finishing techniques shall meet the following limitations.

Effluent characteristic	Effluent limitations (mg/l)	
	Maximum for any 1 day	Average of daily values for 30 consecutive days shall not exceed—
Lead	0.2	0.1
Fluoride	26.0	13.0
TSS	20.0	10.0
pH	(1)	(1)

[1] Within the range 6.0 to 9.0.

(b) Any plant which melts raw materials, produces non-leaded hand pressed or blown glassware, discharges greater than 50 gallons per day of process

waste water, and employs hydrofluoric acid finishing techniques shall meet the following limitations.

Effluent characteristic	Effluent limitations (mg/l)	
	Maximum for any 1 day	Average of daily values for 30 consecutive days shall not exceed—
Fluoride	26.0	13.0
TSS	20.0	10.0
pH	(1)	(1)

[1] Within the range 6.0 to 9.0.

(c) Any plant which melts raw materials, produces leaded or non-leaded hand pressed or blown glassware, discharges greater than 50 gallons per day of process waste water, and does not employ hydrofluoric acid finishing techniques shall meet the following limitations.

Effluent characteristic	Effluent limitations (mg/l)	
	Maximum for any 1 day	Average of daily values for 30 consecutive days shall not exceed—
TSS	20.0	10.0
pH	(1)	(1)

[1] Within the range 6.0 to 9.0.

§ 426.136 Pretreatment standards for new sources.

Any new source subject to this subpart that introduces process wastewater pollutants into a publicly owned treatment works must comply with 40 CFR part 403. In addition, the following pretreatment standard establishes the quantity or quality of pollutants or pollutant properties controlled by this section which may be discharged to a publicly owned treatment works by a new point source subject to the provisions of this subpart.

Pollutant or pollutant property	Pretreatment standards (mg/l)	
	Maximum for any 1 day	Average of daily values for 30 consecutive days shall not exceed—
(a):		
Fluoride	26.0	13.0
Lead	(1)	(1)
TSS	(1)	(1)
pH	(1)	(1)
(b):		
Fluoride	26.0	13.0
Lead	(1)	(1)
TSS	(1)	(1)
pH	(1)	(1)
(c):		
TSS	(1)	(1)
pH	(1)	(1)

[1] No limitation.

[40 FR 2960, Jan. 16, 1975, as amended at 60 FR 33960, June 29, 1995]

§ 426.137 [Reserved]

PART 427—ASBESTOS MANUFACTURING POINT SOURCE CATEGORY

Subpart A—Asbestos-Cement Pipe Subcategory

Sec.
427.10 Applicability; description of the asbestos-cement pipe subcategory.
427.11 Specialized definitions.
427.12 Effluent limitations guidelines representing the degree of effluent reduction attainable by the application of the best practicable control technology currently available.
427.13 Effluent limitations guidelines representing the degree of effluent reduction attainable by the application of the best available technology economically achievable.
427.14 Pretreatment standards for existing sources.
427.15 Standards of performance for new sources.
427.16 Pretreatment standards for new sources.

Subpart B—Asbestos-Cement Sheet Subcategory

427.20 Applicability; description of the asbestos-cement sheet subcategory.
427.21 Specialized definitions.
427.22 Effluent limitations guidelines representing the degree of effluent reduction attainable by the application of the best practicable control technology currently available.

427.23 Effluent limitations guidelines representing the degree of effluent reduction attainable by the application of the best available technology economically achievable.
427.24 Pretreatment standards for existing sources.
427.25 Standards of performance for new sources.
427.26 Pretreatment standards for new sources.

Subpart C—Asbestos Paper (Starch Binder) Subcategory

427.30 Applicability; description of the asbestos paper (starch binder) subcategory.
427.31 Specialized definitions.
427.32 Effluent limitations guidelines representing the degree of effluent reduction attainable by the application of the best practicable control technology currently available.
427.33 Effluent limitations guidelines representing the degree of effluent reduction attainable by the application of the best available technology economically achievable.
427.34 Pretreatment standards for existing sources.
427.35 Standards of performance for new sources.
427.36 Pretreatment standards for new sources.

Subpart D—Asbestos Paper (Elastomeric Binder) Subcategory

427.40 Applicability; description of the asbestos paper (elastomeric binder) subcategory.
427.41 Specialized definitions.
427.42 Effluent limitations guidelines representing the degree of effluent reduction attainable by the application of the best practicable control technology currently available.
427.43 Effluent limitations guidelines representing the degree of effluent reduction attainable by the application of the best available technology economically achievable.
427.44 Pretreatment standards for existing sources.
427.45 Standards of performance for new sources.
427.46 Pretreatment standards for new sources.

Subpart E—Asbestos Millboard Subcategory

427.50 Applicability; description of the asbestos millboard subcategory.
427.51 Specialized definitions.
427.52 Effluent limitations guidelines representing the degree of effluent reduction attainable by the application of the best practicable control technology currently available.
427.53 Effluent limitations guidelines representing the degree of effluent reduction attainable by the application of the best available technology economically achievable.
427.54 Pretreatment standards for existing sources.
427.55 Standards of performance for new sources.
427.56 Pretreatment standards for new sources.

Subpart F—Asbestos Roofing Subcategory

427.60 Applicability; description of the asbestos roofing subcategory.
427.61 Specialized definitions.
427.62 Effluent limitations guidelines representing the degree of effluent reduction attainable by the application of the best practicable control technology currently available.
427.63 Effluent limitations guidelines representing the degree of effluent reduction attainable by the application of the best available technology economically achievable.
427.64 Pretreatment standards for existing sources.
427.65 Standards of performance for new sources.
427.66 Pretreatment standards for new sources.

Subpart G—Asbestos Floor Tile Subcategory

427.70 Applicability; description of the asbestos floor tile subcategory.
427.71 Specialized definitions.
427.72 Effluent limitations guidelines representing the degree of effluent reduction attainable by the application of the best practicable control technology currently available.
427.73 Effluent limitations guidelines representing the degree of effluent reduction attainable by the application of the best available technology economically achievable.
427.74 Pretreatment standards for existing sources.
427.75 Standards of performance for new sources.
427.76 Pretreatment standards for new sources.

Subpart H—Coating or Finishing of Asbestos Textiles Subcategory

427.80 Applicability; description of the coating or finishing of asbestos textiles subcategory.
427.81 Specialized definitions.

427.82 Effluent limitations guidelines representing the degree of effluent reduction attainable by the application of the best practicable control technology currently available.
427.83 Effluent limitations guidelines representing the degree of effluent reduction attainable by the application of the best available technology economically achievable.
427.84 [Reserved]
427.85 Standards of performance for new sources.
427.86 Pretreatment standards for new sources.

Subpart I—Solvent Recovery Subcategory

427.90 Applicability; description of the solvent recovery subcategory.
427.91 Specialized definitions.
427.92 Effluent limitations guidelines representing the degree of effluent reduction attainable by the application of the best practicable control technology currently available.
427.93 Effluent limitations guidelines representing the degree of effluent reduction attainable by the application of the best available technology economically achievable.
427.94 [Reserved]
427.95 Standards of performance for new sources.
427.96 Pretreatment standards for new sources.
427.97 Effluent limitations guidelines representing the degree of effluent reduction attainable by the application of the best conventional pollutant control technology.

Subpart J—Vapor Absorption Subcategory

427.100 Applicability; description of the vapor absorption subcategory.
427.101 Specialized definitions.
427.102 Effluent limitations guidelines representing the degree of effluent reduction attainable by the application of the best practicable control technology currently available.
427.103 Effluent limitations guidelines representing the degree of effluent reduction attainable by the application of the best available technology economically achievable.
427.104 [Reserved]
427.105 Standards of performance for new sources.
427.106 Pretreatment standards for new sources.

Subpart K—Wet Dust Collection Subcategory

427.110 Applicability; description of the wet dust collection subcategory.
427.111 Specialized definitions.
427.112 Effluent limitations guidelines representing the degree of effluent reduction attainable by the application of the best practicable control technology currently available.
427.113 Effluent limitations guidelines representing the degree of effluent reduction attainable by the application of the best available technology economically achievable.
427.114 [Reserved]
427.115 Standards of performance for new sources.
427.116 Pretreatment standards for new sources.

AUTHORITY: Secs. 301, 304 (b) and (c), 306 (b) and (c), 307(c), Federal Water Pollution Control Act, as amended; 33 U.S.C. 1251, 1311, 1314 (b) and (c), 1316 (b) and (c), 1317(c); 86 Stat. 816 *et seq.;* Pub. L. 92–500.

SOURCE: 39 FR 7527, Feb. 26, 1974, unless otherwise noted.

Subpart A—Asbestos-Cement Pipe Subcategory

§ 427.10 Applicability; description of the asbestos-cement pipe subcategory.

The provisions of this subpart are applicable to discharges resulting from the process in which asbestos. Portland cement, silica and other ingredients are used in the manufacturing of asbestos-cement pipe.

§ 427.11 Specialized definitions.

For the purpose of this subpart:

(a) Except as provided below, the general definitions, abbreviations and methods of analysis set forth in 40 CFR part 401 shall apply to this subpart.

§ 427.12 Effluent limitations guidelines representing the degree of effluent reduction attainable by the application of the best practicable control technology currently available.

Except as provided in §§ 125.30 through 125.32, any existing point source subject to this subpart shall achieve the following effluent limitations representing the degree of effluent reduction attainable by the application of the best practicable control technology currently available (BPT):

Effluent characteristic	Effluent limitations	
	Maximum for any 1 day	Average of daily values for 30 consecutive days shall not exceed—
	Metric units (kg/kkg of product)	
TSS	0.57	0.19
pH	(1)	(1)
	English units (lb/ton of product)	
TSS	1.14	0.38
pH	(1)	(1)

[1] Within the range 6.0 to 9.0.

[39 FR 7527, Feb. 26, 1974, as amended at 60 FR 33960, June 29, 1995]

§ 427.13 Effluent limitations guidelines representing the degree of effluent reduction attainable by the application of the best available technology economically achievable.

The following limitations establish the quantity or quality of pollutants or pollutants properties which may be discharged by a point source subject to the provisions of this subpart after application of the best available technology economically achievable: There shall be no discharge of process waste water pollutants to navigable waters.

§ 427.14 Pretreatment standards for existing sources.

Any existing source subject to this subpart that introduces process wastewater pollutants into a publicly owned treatment works must comply with 40 CFR part 403. In addition, the following pretreatment standard establishes the quantity or quality of pollutants or pollutant properties controlled by this section which may be discharged to a publicly owned treatment works by a point source subject to the provisions of this subpart.

Pollutant or pollutant property	Pretreatment standard
pH	No limitation.
TSS	Do.

[40 FR 6444, Feb. 11, 1975, as amended at 60 FR 33960, June 29, 1995]

§ 427.15 Standards of performance for new sources.

The following standards of performance establish the quantity or quality of pollutants or pollutant properties, controlled by this section, which may be discharged by a new source subject to the provisions of this subpart:

Effluent characteristic	Effluent limitations	
	Maximum for any 1 day	Average of daily values for 30 consecutive days shall not exceed—
	Metric units (kg/kkg of product)	
TSS	0.57	0.19
pH	(1)	(1)
	English units (lb/ton of product)	
TSS	1.14	0.38
pH	(1)	(1)

[1] Within the range 6.0 to 9.0.

§ 427.16 Pretreatment standards for new sources.

Any new source subject to this subpart that introduces process wastewater pollutants into a publicly owned treatment works must comply with 40 CFR part 403.

[60 FR 33960, June 29, 1995]

Subpart B—Asbestos-Cement Sheet Subcategory

§ 427.20 Applicability; description of the asbestos-cement sheet subcategory.

The provisions of this subpart are applicable to discharges resulting from the process in which asbestos, Portland cement, silica, and other ingredients are used in the manufacturing of asbestos-cement sheets. Discharges resulting from manufacture of asbestos-cement sheet laboratory tops are specifically excluded from the provisions of this subpart.

§ 427.21 Specialized definitions.

For the purpose of this subpart:

(a) Except as provided below, the general definitions, abbreviations and methods of analysis set forth in 40 CFR part 401 shall apply to this subpart.

§ 427.22 Effluent limitations guidelines representing the degree of effluent reduction attainable by the application of the best practicable control technology currently available.

Except as provided in §§ 125.30 through 125.32, any existing point source subject to this subpart shall achieve the following effluent limitations representing the degree of effluent reduction attainable by the application of the best practicable control technology currently available (BPT):

Effluent characteristic	Effluent limitations	
	Maximum for any 1 day	Average of daily values for 30 consecutive days shall not exceed—
	Metric units (kg/kkg of product)	
TSS	0.68	0.23
pH	(1)	(1)
	English units (lb/ton of product)	
TSS	1.35	0.45
pH	(1)	(1)

[1] Within the range 6.0 to 9.0.

[39 FR 7527, Feb. 26, 1974, as amended at 60 FR 33960, June 29, 1995]

§ 427.23 Effluent limitations guidelines representing the degree of effluent reduction attainable by the application of the best available technology economically achievable.

The following limitations establish the quantity or quality of pollutants or pollutant properties which may be discharged by a point source subject to the provisions of this subpart after application of the best available technology economically achievable: There shall be no discharge of process waste water pollutants to navigable waters.

§ 427.24 Pretreatment standards for existing sources.

Any existing source subject to this subpart that introduces process wastewater pollutants into a publicly owned treatment works must comply with 40 CFR part 403. In addition, the following pretreatment standard establishes the quantity or quality of pollutants or pollutant properties controlled by this section which may be discharged to a publicly owned treatment works by a point source subject to the provisions of this subpart.

Pollutant or pollutant property	Pretreatment standard
pH	No limitation.
TSS	Do.

[40 FR 6444, Feb. 11, 1975, as amended at 60 FR 33960, June 29, 1995]

§ 427.25 Standards of performance for new sources.

The following standards of performance establish the quantity or quality of pollutants or pollutant properties which may be discharged by a new source subject to the provisions of this subpart: There shall be no discharge of process waste waters pollutants to navigable waters.

§ 427.26 Pretreatment standards for new sources.

Any new source subject to this subpart that introduces process wastewater pollutants into a publicly owned treatment works must comply with 40 CFR part 403.

[60 FR 33960, June 29, 1995]

Subpart C—Asbestos Paper (Starch Binder) Subcategory

§ 427.30 Applicability; description of the asbestos paper (starch binder) subcategory.

The provisions of this subpart are applicable to discharges resulting from the process in which asbestos, starch binders and other ingredients are used in the manufacture of asbestos paper (starch binder).

§ 427.31 Specialized definitions.

For the purpose of this subpart:

(a) Except as provided below, the general definitions, abbreviations and methods of analysis set forth in 40 CFR part 401 shall apply to this subpart.

§ 427.32 Effluent limitations guidelines representing the degree of effluent reduction attainable by the application of the best practicable control technology currently available.

Except as provided in §§ 125.30 through 125.32, any existing point source subject to this subpart shall

achieve the following effluent limitations representing the degree of effluent reduction attainable by the application of the best practicable control technology currently available (BPT):

Effluent characteristic	Effluent limitations	
	Maximum for any 1 day	Average of daily values for 30 consecutive days shall not exceed—
	Metric units (kg/kkg of product)	
TSS	0.55	0.35
pH	(1)	(1)
	English units (lb/ton of product)	
TSS	1.10	0.70
pH	(1)	(1)

[1] Within the range 6.0 to 9.0.

[39 FR 7527, Feb. 26, 1974, as amended at 60 FR 33961, June 29, 1995]

§ 427.33 Effluent limitations guidelines representing the degree of effluent reduction attainable by the application of the best available technology economically achievable.

The following limitations establish the quantity or quality of pollutants or pollutant properties which may be discharged by point source subject to the provisions of this subpart after application of the best available technology economically achievable: There shall be no discharge of process waste water pollutants to navigable waters.

§ 427.34 Pretreatment standards for existing sources.

Any existing source subject to this subpart that introduces process wastewater pollutants into a publicly owned treatment works must comply with 40 CFR part 403. In addition, the following pretreatment standard establishes the quantity or quality of pollutants or pollutant properties controlled by this section which may be discharged to a publicly owned treatment works by a point source subject to the provisions of this subpart.

Pollutant or pollutant property	Pretreatment standard
pH	No limitation.
TSS	Do.

[40 FR 6445, Feb. 11, 1975, as amended at 60 FR 33961, June 29, 1995]

§ 427.35 Standards of performance for new sources.

The following standards of performance establish the quantity or quality of pollutants or pollutant properties which may be discharged by a new source subject to the provisions of this subpart: There shall be no discharge of process waste water pollutants to navigable waters.

§ 427.36 Pretreatment standards for new sources.

Any new source subject to this subpart that introduces process wastewater pollutants into a publicly owned treatment works must comply with 40 CFR part 403.

[60 FR 33961, June 29, 1995]

Subpart D—Asbestos Paper (Elastomeric Binder) Subcategory

§ 427.40 Applicability; description of the asbestos paper (elastomeric binder) subcategory.

The provisions of this subpart are applicable to discharges resulting from the process in which asbestos, elastomeric binder, and other ingredients are used in the manufacture of asbestos paper (elastomeric binder).

§ 427.41 Specialized definitions.

For the purpose of this subpart:

(a) Except as provided below, the general definitions, abbreviations and methods of analysis set forth in 40 CFR part 401 shall apply to this subpart.

§ 427.42 Effluent limitations guidelines representing the degree of effluent reduction attainable by the application of the best practicable control technology currently available.

Except as provided in §§ 125.30 through 125.32, any existing point source subject to this subpart shall achieve the following effluent limitations representing the degree of effluent reduction attainable by the application of the best practicable control technology currently available (BPT):

Effluent characteristic	Effluent limitations	
	Maximum for any 1 day	Average of daily values for 30 consecutive days shall not exceed—
	Metric units (kg/kkg of product)	
TSS	0.55	0.35
pH	(1)	(1)
	English units (lb/ton of product)	
TSS	1.10	0.70
pH	(1)	(1)

[1] Within the range 6.0 to 9.0.

[39 FR 7527, Feb. 26, 1974, as amended at 60 FR 33961, June 29, 1995]

§ 427.43 Effluent limitations guidelines representing the degree of effluent reduction attainable by the application of the best available technology economically achievable.

The following limitations establish the quantity or quality of pollutants or pollutant properties which may be discharged by a point source subject to the provisions of this subpart after application of the best available technology economically achievable: There shall be no discharge of process waste water pollutants to navigable waters.

§ 427.44 Pretreatment standards for existing sources.

Any existing source subject to this subpart that introduces process wastewater pollutants into a publicly owned treatment works must comply with 40 CFR part 403. In addition, the following pretreatment standard establishes the quantity or quality of pollutants or pollutant properties controlled by this section which may be discharged to a publicly owned treatment works by a point source subject to the provisions of this subpart.

Pollutant or pollutant property	Pretreatment standard
pH	No limitation.
TSS	Do.

[40 FR 6445, Feb. 11, 1975, as amended at 60 FR 33961, June 29, 1995]

§ 427.45 Standards of performance for new sources.

The following standards of performance establish the quantity or quality of pollutants or pollutant properties, controlled by this section, which may be discharged by a new source subject to the provisions of this subpart:

Effluent characteristic	Effluent limitations	
	Maximum for any 1 day	Average of daily values for 30 consecutive days shall not exceed—
	Metric units (kg/kkg of product)	
TSS	0.55	0.35
pH	(1)	(1)
	English units (lb/ton of product)	
TSS	.110	0.70
pH	(1)	(1)

[1] Within the range 6.0 to 9.0.

§ 427.46 Pretreatment standards for new sources.

Any new source subject to this subpart that introduces process wastewater pollutants into a publicly owned treatment works must comply with 40 CFR part 403.

[60 FR 33961, June 29, 1995]

Subpart E—Asbestos Millboard Subcategory

§ 427.50 Applicability; description of the asbestos millboard subcategory.

The provisions of this subpart are applicable to discharges resulting from the process in which asbestos in combination with various other materials such as cement, starch, clay, lime, and mineral wool are used in the manufacture of asbestos millboard.

§ 427.51 Specialized definitions.

For the purpose of this subpart:

(a) Except as provided below, the general definitions, abbreviations and methods of analysis set forth in 40 CFR part 401 shall apply to this subpart.

§ 427.52 Effluent limitations guidelines representing the degree of effluent reduction attainable by the application of the best practicable control technology currently available.

Except as provided in §§ 125.30 through 125.32, any existing point source subject to this subpart shall

achieve the following effluent limitations representing the degree of effluent reduction attainable by the application of the best practicable control technology currently available (BPT): There shall be no discharge of process waste water pollutants to navigable waters.

[60 FR 33961, June 29, 1995]

§ 427.53 Effluent limitations guidelines representing the degree of effluent reduction attainable by the application of the best available technology economically achievable.

The following limitations establish the quantity or quality of pollutants or pollutant properties which may be discharged by a point source subject to the provisions of this subpart after application of the best available technology economically achievable: There shall be no discharge of process waste water pollutants to navigable waters.

§ 427.54 Pretreatment standards for existing sources.

Any existing source subject to this subpart that introduces process wastewater pollutants into a publicly owned treatment works must comply with 40 CFR part 403. In addition, the following pretreatment standard establishes the quantity or quality of pollutants or pollutant properties controlled by this section which may be discharged to a publicly owned treatment works by a point source subject to the provisions of this subpart.

Pollutant or pollutant property	Pretreatment standard
pH	No limitation.
TSS	Do.

[40 FR 6445, Feb. 11, 1975, as amended at 60 FR 33961, June 29, 1995]

§ 427.55 Standards of performance for new sources.

The following standards of performance establish the quantity or quality of pollutants or pollutant properties which may be discharged by a new source subject to the provisions of this subpart: There shall be no discharge of process waste water pollutants to navigable waters.

§ 427.56 Pretreatment standards for new sources.

Any new source subject to this subpart that introduces process wastewater pollutants into a publicly owned treatment works must comply with 40 CFR part 403.

[60 FR 33961, June 29, 1995]

Subpart F—Asbestos Roofing Subcategory

§ 427.60 Applicability; description of the asbestos roofing subcategory.

The provisions of this subpart are applicable to discharges resulting from the process in which asbestos paper is saturated with asphalt or coal tar with the subsequent application of various surface treatments to produce asbestos roofing products.

§ 427.61 Specialized definitions.

For the purpose of this subpart:

(a) Except as provided below, the general definitions, abbreviations and methods of analysis set forth in 40 CFR part 401 shall apply to this subpart.

(b) COD shall mean COD added to the process waste water.

§ 427.62 Effluent limitations guidelines representing the degree of effluent reduction attainable by the application of the best practicable control technology currently available.

Except as provided in §§ 125.30 through 125.32, any existing point source subject to this subpart shall achieve the following effluent limitations representing the degree of effluent reduction attainable by the application of the best practicable control technology currently available (BPT):

Effluent characteristic	Effluent limitations	
	Maximum for any 1 day	Average of daily values for 30 consecutive days shall not exceed—
	Metric units (kg/kkg of product)	
COD	0.015	0.008
TSS	0.010	.006
pH	(1)	(1)
	English units (lb/ton of product)	
COD	0.029	0.016
TSS	0.020	.012
pH	(1)	(1)

[1] Within the range 6.0 to 9.0.

[39 FR 7527, Feb. 26, 1974, as amended at 60 FR 33961, June 29, 1995]

§ 427.63 Effluent limitations guidelines representing the degree of effluent reduction attainable by the application of the best available technology economically achievable.

The following limitations establish the quantity or quality of pollutants or pollutant properties which may be discharged by a point source subject to the provisions of this subpart after application of the best available technology economically achievable: There shall be no discharge of process waste water pollutants to navigable waters.

§ 427.64 Pretreatment standards for existing sources.

Any existing source subject to this subpart that introduces process wastewater pollutants into a publicly owned treatment works must comply with 40 CFR part 403. In addition, the following pretreatment standard establishes the quantity or quality of pollutants or pollutant properties controlled by this section which may be discharged to a publicly owned treatment works by a point source subject to the provisions of this subpart.

Pollutant or pollutant property	Pretreatment standard
pH	No limitation.
COD	Do.
TSS	Do.

[40 FR 6445, Feb. 11, 1975, as amended at 60 FR 33961, June 29, 1995]

§ 427.65 Standards of performance for new sources.

The following standards of performance establish the quantity or quality of pollutants or pollutant properties which may be discharged by a new source subject to the provisions of this subpart: There shall be no discharge of process waste water pollutants to navigable waters.

§ 427.66 Pretreatment standards for new sources.

Any new source subject to this subpart that introduces process wastewater pollutants into a publicly owned treatment works must comply with 40 CFR part 403.

[60 FR 33961, June 29, 1995]

Subpart G—Asbestos Floor Tile Subcategory

§ 427.70 Applicability; description of the asbestos floor tile subcategory.

The provisions of this subpart are applicable to discharges resulting from the process in which asbestos, polyvinyl chloride resin, chemical stabilizers, limestone, and other fillers are used in the manufacture of asbestos floor tile.

§ 427.71 Specialized definitions.

For the purpose of this subpart:

(a) Except as provided below, the general definitions, abbreviations and methods of analysis set forth in 40 CFR part 401 shall apply to this subpart.

(b) The abbreviation ''mpc'' shall mean 1000 pieces of floor tile.

(c) The term ''pieces'' shall mean floor tile measured in the standard size of 12″× 12″ × 3/32″.

(d) COD shall mean COD added to the process waste water.

§ 427.72 Effluent limitations guidelines representing the degree of effluent reduction attainable by the application of the best practicable control technology currently available.

Except as provided in §§ 125.30 through 125.32, any existing point source subject to this subpart shall

achieve the following effluent limitations representing the degree of effluent reduction attainable by the application of the best practicable control technology currently available (BPT):

Effluent characteristic	Effluent limitations	
	Maximum for any 1 day	Average of daily values for 30 consecutive days shall not exceed—
	Metric units (kg/mpc of product)	
COD	0.14	0.09
TSS	0.06	.04
pH	(1)	(1)
	English units (lb/mpc of product)	
COD	0.30	0.18
TSS	0.13	.08
pH	(1)	(1)

[1] Within the range 6.0 to 9.0.

[39 FR 7527, Feb. 26, 1974, as amended at 60 FR 33961, June 29, 1995]

§ 427.73 Effluent limitations guidelines representing the degree of effluent reduction attainable by the application of the best available technology economically achievable.

The following limitations establish the quantity or quality of pollutants or pollutant properties which may be discharged by a point source subject to the provisions of this subpart after application of the best available technology economically achievable: There shall be no discharge of process waste water pollutants to navigable waters.

§ 427.74 Pretreatment standards for existing sources.

Any existing source subject to this subpart that introduces process wastewater pollutants into a publicly owned treatment works must comply with 40 CFR part 403. In addition, the following pretreatment standard establishes the quantity or quality of pollutants or pollutant properties controlled by this section which may be discharged to a publicly owned treatment works by a point source subject to the provisions of this subpart.

Pollutant or pollutant property	Pretreatment standard
pH	No limitation.
COD	Do.
TSS	Do.

[40 FR 6445, Feb. 11, 1975, as amended at 60 FR 33962, June 29, 1995]

§ 427.75 Standards of performance for new sources.

The following standards of performance establish the quantity or quality of pollutants or pollutant properties which may be discharged by a new source subject to the provisions of this subpart: There shall be no discharge of process waste water pollutants to navigable waters.

§ 427.76 Pretreatment standards for new sources.

Any new source subject to this subpart that introduces process wastewater pollutants into a publicly owned treatment works must comply with 40 CFR part 403.

[60 FR 33962, June 29, 1995]

Subpart H—Coating or Finishing of Asbestos Textiles Subcategory

SOURCE: 40 FR 1875, Jan. 9, 1975, unless otherwise noted.

§ 427.80 Applicability; description of the coating or finishing of asbestos textiles subcategory.

The provisions of this subpart are applicable to discharges resulting from the process of coating or impregnating asbestos textiles with materials which impart specific desired qualities to the finished product.

§ 427.81 Specialized definitions.

For the purpose of this subpart:

(a) Except as provided below, the general definitions, abbreviations and methods of analysis set forth in 40 CFR part 401 shall apply to this subpart.

§ 427.82 Effluent limitations guidelines representing the degree of effluent reduction attainable by the application of the best practicable control technology currently available.

Except as provided in §§ 125.30 through 125.32, any existing point

source subject to this subpart shall achieve the following effluent limitations representing the degree of effluent reduction attainable by the application of the best practicable control technology currently available (BPT): There shall be no discharge of process wastewater pollutants to navigable waters.

[60 FR 33962, June 29, 1995]

§ 427.83 Effluent limitations guidelines representing the degree of effluent reduction attainable by the application of the best available technology economically achievable.

The following limitations establish the quantity or quality of pollutants or pollutant properties which may be discharged by a point source subject to the provisions of this subpart after application of the best available technology economically achievable: There shall be no discharge of process waste water pollutants to navigable waters.

[40 FR 1875, Jan. 9, 1975; 40 FR 18172, Apr. 25, 1975]

§ 427.84 [Reserved]

§ 427.85 Standards of performance for new sources.

The following standards of performance establish the quantity or quality of pollutants or pollutant properties which may be discharged by a new source subject to the provisions of this subpart: There shall be no discharge of process waste water pollutants to navigable waters.

[40 FR 1875, Jan. 9, 1975; 40 FR 18172, Apr. 25, 1975]

§ 427.86 Pretreatment standards for new sources.

Any new source subject to this subpart that introduces process wastewater pollutants into a publicly owned treatment works must comply with 40 CFR part 403. In addition, the following pretreatment standard establishes the quantity or quality of pollutants or pollutant properties, controlled by this section, which may be discharged to a publicly owned treatment works by a new point source subject to the provisions of this subpart.

Pollutant or pollutant property	Pretreatment standard
pH	No limitation.
COD	Do.
TSS	Do.

[40 FR 1875, Jan. 9, 1975, as amended at 60 FR 33962, June 29, 1995]

Subpart I—Solvent Recovery Subcategory

SOURCE: 40 FR 1876, Jan. 9, 1975, unless otherwise noted.

§ 427.90 Applicability; description of the solvent recovery subcategory.

The provisions of this subpart are applicable to discharges resulting from the process of solvent recovery in the manufacture of asbestos products.

§ 427.91 Specialized definitions.

For the purpose of this subpart:

(a) Except as provided below, the general definitions, abbreviations and methods of analysis set forth in 40 CFR part 401 shall apply to this subpart.

§ 427.92 Effluent limitations guidelines representing the degree of effluent reduction attainable by the application of the best practicable control technology currently available.

Except as provided in §§ 125.30 through 125.32, any existing point source subject to this subpart shall achieve the following effluent limitations representing the degree of effluent reduction attainable by the application of the best practicable control technology currently available (BPT):

Effluent characteristic	Effluent limitations	
	Maximum for any 1 day	Average of daily values for 30 consecutive days shall not exceed—
	Metric units (kg/kkg of finished asbestos product)	
COD	0.30	0.15
TSS	0.18	0.09
pH	(1)	(1)
	English units (lbs/1,000 lbs of finished asbestos product)	
COD	0.30	0.15
TSS	0.18	0.09
pH	(1)	(1)

[1] Within the range 6.0 to 9.0.

[40 FR 1876, Jan. 9, 1975, as amended at 60 FR 33962, June 29, 1995]

§ 427.93 Effluent limitations guidelines representing the degree of effluent reduction attainable by the application of the best available technology economically achievable.

The following limitations establish the quantity or quality of pollutants or pollutant properties, controlled by this section, which may be discharged by a point source subject to the provisions of this subpart after application of the best available technology economically achievable.

Effluent characteristic	Effluent limitations	
	Maximum for any 1 day	Average of daily values for 30 consecutive days shall not exceed—
	Metric units (kg/kkg of finished asbestos products)	
COD	0.30	0.15
	English units (lb/1,000 lb of finished asbestos products)	
COD	0.30	0.15

[44 FR 50747, Aug. 29, 1979]

§ 427.94 [Reserved]

§ 427.95 Standards of performance for new sources.

The following standards of performance establish the quantity or quality of pollutants or pollutant properties, controlled by this section, which may be discharged by a new source subject to the provisions of this subpart:

Effluent characteristic	Effluent limitations	
	Maximum for any 1 day	Average of daily values for 30 consecutive days shall not exceed—
	Metric units (kg/kkg of finished asbestos product)	
COD	0.30	0.15
TSS	0.18	0.09
pH	(1)	(1)
	English units (lbs/1,000 lbs of finished asbestos product)	
COD	0.30	0.15
TSS	0.18	0.09
pH	(1)	(1)

[1] Within the range 6.0 to 9.0.

§ 427.96 Pretreatment standards for new sources.

Any new source subject to this subpart that introduces process wastewater pollutants into a publicly owned treatment works must comply with 40 CFR part 403. In addition, the following pretreatment standard establishes the quantity or quality of pollutants or pollutant properties, controlled by this section, which may be discharged to a publicly owned treatment works by a new point source subject to the provisions of this subpart.

Pollutant or pollutant property	Pretreatment standard
pH	No limitation.
COD	Do.
TSS	Do.

[40 FR 1876, Jan. 9, 1975, as amended at 60 FR 33962, June 29, 1995]

§ 427.97 Effluent limitations guidelines representing the degree of effluent reduction attainable by the application of the best conventional pollutant control technology.

The following limitations establish the quantity or quality of pollutants or pollutant properties, controlled by this section, which may be discharged by a point source subject to the provisions of this subpart after application of the best conventional pollutant control technology.

Effluent characteristic	Effluent limitations	
	Maximum for any 1 day	Average of daily values for 30 consecutive days shall not exceed—
	Metric units (kg/kkg of finished asbestos products)	
TSS	0.18	0.09
pH	(1)	(1)
	English units (lb/1,000 lb of finished asbestos products)	
TSS	0.18	0.09
pH	(1)	(1)

[1] Within the range 6.0 to 9.0.

[44 FR 50747, Aug. 29, 1979]

Subpart J—Vapor Absorption Subcategory

SOURCE: 40 FR 1876, Jan. 9, 1975, unless otherwise noted.

§ 427.100 Applicability; description of the vapor absorption subcategory.

The provisions of this subpart are applicable to discharges resulting from the removal of volatilized organic materials from atmospheric emissions by means of wet scrubbers.

§ 427.101 Specialized definitions.

For the purpose of this subpart:

(a) Except as provided below, the general definitions, abbreviations, and methods of analysis set forth in 40 CFR part 401 shall apply to this subpart.

§ 427.102 Effluent limitations guidelines representing the degree of effluent reduction attainable by the application of the best practicable control technology currently available.

Except as provided in §§ 125.30 through 125.32, any existing point source subject to this subpart shall achieve the following effluent limitations representing the degree of effluent reduction attainable by the application of the best practicable control technology currently available (BPT): There shall be no discharge of process wastewater pollutants to navigable waters.

[60 FR 33962, June 29, 1995]

§ 427.103 Effluent limitations guidelines representing the degree of effluent reduction attainable by the application of the best available technology economically achievable.

The following limitations establish the quantity or quality of pollutants or pollutant properties which may be discharged by a point source subject to the provisions of this subpart after application of the best available technology economically achievable: There shall be no discharge of process waste water pollutants to navigable waters.

[40 FR 1877, Jan. 9, 1975; 40 FR 18172, Apr. 25, 1975]

§ 427.104 [Reserved]

§ 427.105 Standards of performance for new sources.

The following standards of performance establish the quantity or quality of pollutants or pollutant properties which may be discharged by a new source subject to the provisions of this subpart: There shall be no discharge of process waste water pollutants to navigable waters.

[40 FR 1877, Jan. 9, 1975; 40 FR 18172, Apr. 25, 1975]

§ 427.106 Pretreatment standards for new sources.

Any new source subject to this subpart that introduces process wastewater pollutants into a publicly owned treatment works must comply with 40 CFR part 403. In addition, the following pretreatment standard establishes the quantity or quality of pollutants or pollutant properties, controlled by this section, which may be discharged to a publicly owned treatment works by a new point source subject to the provisions of this subpart.

Pollutant or pollutant property	Pretreatment standard
pH	No limitation.
COD	Do.
TSS	Do.

[40 FR 1876, Jan. 9, 1975, as amended at 60 FR 33962, June 29, 1995]

Subpart K—Wet Dust Collection Subcategory

SOURCE: 40 FR 1877, Jan. 9, 1975, unless otherwise noted.

§ 427.110 Applicability; description of the wet dust collection subcategory.

The provisions of this subpart are applicable to discharges resulting from the removal of dust (particulates) from atmospheric emissions by means of wet scrubbers.

§ 427.111 Specialized definitions.

For the purpose of this subpart:

(a) Except as provided below, the general definitions, abbreviations and methods of analysis set forth in 40 CFR part 401 shall apply to this subpart.

§ 427.112 Effluent limitations guidelines representing the degree of effluent reduction attainable by the application of the best practicable control technology currently available.

Except as provided in §§ 125.30 through 125.32, any existing point source subject to this subpart shall achieve the following effluent limitations representing the degree of effluent reduction attainable by the application of the best practicable control technology currently available (BPT):

Effluent characteristic	Effluent limitations	
	Maximum for any 1 day	Average of daily values for 30 consecutive days shall not exceed—
	Metric units (kg/1,000 std cu m of air scrubbed)	
TSS	0.08	0.04
pH	(1)	(1)
	English units (lbs/MM std cu ft of air scrubbed)	
TSS	5.0	2.50
pH	(1)	(1)

[1] Within the range 6.0 to 9.0.

[40 FR 1877, Jan. 9, 1975; 40 FR 18172, Apr. 25, 1975, as amended at 60 FR 33962, June 29, 1995]

§ 427.113 Effluent limitations guidelines representing the degree of effluent reduction attainable by the application of the best available technology economically achievable.

The following limitations establish the quantity or quality of pollutants or pollutant properties which may be discharged by a point source subject to the provisions of this subpart after application of the best available technology economically achievable: There shall be no discharge of waste water pollutants to navigable waters.

§ 427.114 [Reserved]

§ 427.115 Standards of performance for new sources.

The following standards of performance establish the quantity or quality of pollutants or pollutant properties which may be discharged by a new source subject to the provisions of this subpart: There shall be no discharge of process waste water pollutants to navigable waters.

[40 FR 1877, Jan. 9, 1975; 40 FR 18172, Apr. 25, 1975]

§ 427.116 Pretreatment standards for new sources.

Any new source subject to this subpart that introduces process wastewater pollutants into a publicly owned treatment works must comply with 40 CFR part 403. In addition, the following pretreatment standard establishes the quantity or quality of pollutants or pollutant properties, controlled by this section, which may be discharged to a publicly owned treatment works by a new point source subject to the provisions of this subpart.

Pollutant or pollutant property	Pretreatment standard
pH	No limitation.
COD	Do.
TSS	Do.

[40 FR 1877, Jan. 9, 1975, as amended at 60 FR 33962, June 29, 1995]

PART 428—RUBBER MANUFACTURING POINT SOURCE CATEGORY

Subpart A—Tire and Inner Tube Plants Subcategory

Sec.
428.10 Applicability; description of the tire and inner tube plants subcategory.
428.11 Specialized definitions.
428.12 Effluent limitations guidelines representing the degree of effluent reduction attainable by the application of the best practicable control technology currently available.
428.13 Effluent limitations guidelines representing the degree of effluent reduction attainable by the application of the best available technology economically achievable.
428.14 [Reserved]
428.15 Standards of performance for new sources.
428.16 Pretreatment standards for new sources.

Subpart B—Emulsion Crumb Rubber Subcategory

428.20 Applicability; description of the emulsion crumb rubber subcategory.
428.21 Specialized definitions.
428.22 Effluent limitations guidelines representing the degree of effluent reduction attainable by the application of the best practicable control technology currently available.
428.23 Effluent limitations guidelines representing the degree of effluent reduction attainable by the application of the best available technology economically achievable.
428.24 [Reserved]
428.25 Standards of performance for new sources.

Subpart C—Solution Crumb Rubber Subcategory

428.30 Applicability; description of the solution crumb rubber subcategory.
428.31 Specialized definitions.
428.32 Effluent limitations guidelines representing the degree of effluent reduction attainable by the application of the best practicable control technology currently available.
428.33 Effluent limitations guidelines representing the degree of effluent reduction attainable by the application of the best available technology economically achievable.
428.34 [Reserved]
428.35 Standards of performance for new sources.

Subpart D—Latex Rubber Subcategory

428.40 Applicability; description of the latex rubber subcategory.
428.41 Specialized definitions.
428.42 Effluent limitations guidelines representing the degree of effluent reduction attainable by the application of the best practicable control technology currently available.
428.43 Effluent limitations guidelines representing the degree of effluent reduction attainable by the application of the best available technology economically achievable.
428.44 [Reserved]
428.45 Standards of performance for new sources.
428.46 Pretreatment standards for new sources.

Subpart E—Small-Sized General Molded, Extruded, and Fabricated Rubber Plants Subcategory

428.50 Applicability; description of the small-sized general molded, extruded, and fabricated rubber plants subcategory.
428.51 Specialized definitions.
428.52 Effluent limitations guidelines representing the degree of effluent reduction attainable by the application of the best practicable control technology currently available.
428.53 Effluent limitations guidelines representing the degree of effluent reduction attainable by the application of the best available technology economically achievable.
428.54 [Reserved]
428.55 Standards of performance for new sources.
428.56 Pretreatment standards for new sources.

Subpart F—Medium-Sized General Molded, Extruded, and Fabricated Rubber Plants Sub-category

428.60 Applicability; description of the medium-sized general molded, extruded, and fabricated rubber plants subcategory.
428.61 Specialized definitions.
428.62 Effluent limitations guidelines representing the degree of effluent reduction attainable by the application of the best practicable control technology currently available.
428.63 Effluent limitations guidelines representing the degree of effluent reduction attainable by the application of the best available technology economically achievable.
428.64 [Reserved]
428.65 Standards of performance for new sources.

428.66 Pretreatment standards for new sources.

Subpart G—Large-Sized General Molded, Extruded, and Fabricated Rubber Plants Sub-category

428.70 Applicability; description of the large-sized general molded, extruded, and fabricated rubber plants subcategory.
428.71 Specialized definitions.
428.72 Effluent limitations guidelines representing the degree of effluent reduction attainable by the application of the best practicable control technology currently available.
428.73 Effluent limitations guidelines representing the degree of effluent reduction attainable by the application of the best available technology economically achievable.
428.74 [Reserved]
428.75 Standards of performance for new sources.
428.76 Pretreatment standards for new sources.

Subpart H—Wet Digestion Reclaimed Rubber Subcategory

428.80 Applicability; description of the wet digestion reclaimed rubber subcategory.
428.81 Specialized definitions.
428.82 Effluent limitations guidelines representing the degree of effluent reduction attainable by the application of the best practicable control technology currently available.
428.83 Effluent limitations guidelines representing the degree of effluent reduction attainable by the application of the best available technology economically achievable.
428.84 [Reserved]
428.85 Standards of performance for new sources.
428.86 Pretreatment standards for new sources.

Subpart I—Pan, Dry Digestion, and Mechanical Reclaimed Rubber Subcategory

428.90 Applicability; description of the pan, dry digestion, and mechanical reclaimed rubber subcategory.
428.91 Specialized definitions.
428.92 Effluent limitations guidelines representing the degree of effluent reduction attainable by the application of the best practicable control technology currently available.
428.93 Effluent limitations guidelines representing the degree of effluent reduction attainable by the application of the best available technology economically achievable.
428.94 [Reserved]
428.95 Standards of performance for new sources.
428.96 Pretreatment standards for new sources.

Subpart J—Latex-Dipped, Latex-Extruded, and Latex-Molded Rubber Subcategory

428.100 Applicability; description of the latex-dipped, latex-extruded, and latex-molded rubber subcategory.
428.101 Specialized definitions.
428.102 Effluent limitations guidelines representing the degree of effluent reduction attainable by the application of the best practicable control technology currently available.
428.103 Effluent limitations guidelines representing the degree of effluent reduction attainable by the application of the best available technology economically achievable.
428.104 [Reserved]
428.105 Standards of performance for new sources.
428.106 Pretreatment standards for new sources.

Subpart K—Latex Foam Subcategory

428.110 Applicability; description of the latex foam subcategory.
428.111 Specialized definitions.
428.112 Effluent limitations guidelines representing the degree of effluent reduction attainable by the application of the best practicable control technology currently available.
428.113 Effluent limitations guidelines representing the degree of effluent reduction attainable by the application of the best available technology economically achievable.
428.114 [Reserved]
428.115 Standards of performance for new sources.
428.116 Pretreatment standards for new sources.

AUTHORITY: Secs. 301, 304(b) and (c), 306(b) and (c), 307(c), Federal Water Pollution Control Act, as amended; 33 U.S.C. 1251, 1311, 1314(b) and (c), 1316(b) and (c), 1317(c); 86 Stat. 816 *et seq.;* Pub. L. 92–500.

SOURCE: 39 FR 6662, Feb. 21, 1974, unless otherwise noted.

Subpart A—Tire and Inner Tube Plants Subcategory

§ 428.10 Applicability; description of the tire and inner tube plants subcategory.

The provisions of this subpart are applicable to discharges of process wastewater pollutants resulting from the production of pneumatic tires and inner tubes in tire and inner tube plants.

[40 FR 18173, Apr. 25, 1975]

§ 428.11 Specialized definitions.

For the purpose of this subpart:

(a) Except as provided below, the general definitions, abbreviations and methods of analysis set forth in 40 CFR part 401 shall apply to this subpart.

(b) The term ''raw material'' shall mean all natural and synthetic rubber, carbon black, oils, chemical compounds, fabric and wire used in the manufacture of pneumatic tires and inner tubes or components thereof.

(c) The term ''process waste water'' shall mean, in the case of tire and inner tube plants constructed before 1959, discharges from the following: Soapstone solution applications; steam cleaning operations; air pollution control equipment; unroofed process oil unloading areas; mold cleaning operations; latex applications; and air compressor receivers. Discharges from other areas of such plants shall not be classified as process waste water for the purposes of this section.

(d) Except as provided in paragraphs (c) and (e) of this section, the term ''process waste water'' shall have the meaning set forth in § 401.11(q) of this chapter.

(e) Water used only for tread cooling shall be classified as ''nonprocess waste water.''

[39 FR 6662, Feb. 21, 1974, as amended at 40 FR 18173, Apr. 25, 1975]

§ 428.12 Effluent limitations guidelines representing the degree of effluent reduction attainable by the application of the best practicable control technology currently available.

(a) Except as provided in §§ 125.30 through 125.32, any existing point source subject to this subpart shall achieve the following effluent limitations representing the degree of effluent reduction attainable by the application of the best practicable control technology currently available (BPT):

Effluent characteristic	Effluent limitations	
	Maximum for any 1 day	Average of daily values for 30 consecutive days shall not exceed—
	Metric units (kg/kkg of raw material)	
TSS	0.096	0.064
Oil and grease	0.024	.016
pH	(1)	(1)
	English units (lb/1,000 lb of raw material)	
TSS	0.096	0.064
Oil and grease	0.024	.016
pH	(1)	(1)

[1] Within the range 6.0 to 9.0.

(b) All plants constructed before 1959 shall employ the best practicable maintenance and housekeeping practices in order to minimize the discharge of oil and grease in nonprocess waste waters. The concentration of oil and grease in discharges of nonprocess waste water shall meet the following limitations:

(1) The average of daily values for 30 consecutive days shall not exceed 5 mg/l.

(2) The maximum for any one day shall not exceed 10 mg/l.

[39 FR 6662, Feb. 21, 1974; 39 FR 26423, July 19, 1974, as amended at 40 FR 18173, Apr. 25, 1975; 60 FR 33963, June 29, 1995]

§ 428.13 Effluent limitations guidelines, representing the degree of effluent reduction attainable by the application of the best available technology economically achievable.

(a) The following limitations establish the quantity or quality of pollutants or pollutant properties, controlled by this section, which may be discharged by a point source subject to the provisions of this subpart after application of the best available technology economically achievable:

Effluent characteristic	Effluent limitations	
	Maximum for any 1 day	Average of daily values for 30 consecutive days shall not exceed—
	Metric units (kg/kkg of raw material)	
TSS	0.096	0.064
Oil and grease	0.024	.016
pH	(1)	(1)
	English units (lb/1,000 lb of raw material)	
TSS	0.096	0.064
Oil and grease	0.024	.016
pH	(1)	(1)

[1] Within the range 6.0 to 9.0.

(b) All plants constructed before 1959 shall employ the best available maintenance and housekeeping practices in order to minimize the discharge of oil and grease in nonprocess waste waters. The concentration of oil and grease in discharges of nonprocess waste waters shall meet the following limitations:

(1) The average of daily values for 30 consecutive days shall not exceed 5 mg/l.

(2) The maximum for any one day shall not exceed 10 mg/l.

[39 FR 6662, Feb. 21, 1974; 39 FR 26423, July 19, 1974, as amended at 40 FR 18173, Apr. 25, 1975]

§ 428.14 [Reserved]

§ 428.15 Standards of performance for new sources.

The following standards of performance establish the quantity or quality of pollutants or pollutant properties, controlled by this section, which may be discharged by a new source subject to the provisions of this subpart:

Effluent characteristic	Effluent limitations	
	Maximum for any 1 day	Average of daily values for 30 consecutive days shall not exceed—
	Metric units (kg/kkg of raw material)	
TSS	0.096	180.064
Oil and grease	0.024	.016
pH	(1)	(1)
	English units (lb/1,000 lb of raw material)	
TSS	0.096	0.064
Oil and grease	0.024	.016
pH	(1)	(1)

[1] Within the range 6.0 to 9.0.

[39 FR 6662, Feb. 21, 1974; 39 FR 26423, July 19, 1974]

§ 428.16 Pretreatment standards for new sources.

Any new source subject to this subpart that introduces process wastewater pollutants into a publicly owned treatment works must comply with 40 CFR part 403.

[60 FR 33963, June 29, 1995]

Subpart B—Emulsion Crumb Rubber Subcategory

§ 428.20 Applicability; description of the emulsion crumb rubber subcategory.

The provisions of this subpart are applicable to discharges of pollutants resulting from the manufacture of emulsion crumb rubber, other than acrylonitrilebutadiene rubber.

[40 FR 18173, Apr. 25, 1975]

§ 428.21 Specialized definitions.

For the purpose of this subpart:

(a) Except as provided below, the general definitions, abbreviations and methods of analysis set forth in 40 CFR part 401 shall apply to this subpart.

[39 FR 6662, Feb. 21, 1974, as amended at 40 FR 18173, Apr. 25, 1975]

§ 428.22 Effluent limitations guidelines representing the degree of effluent reduction attainable by the application of the best practicable control technology currently available.

Except as provided in §§ 125.30 through 125.32, any existing point source subject to this subpart shall achieve the following effluent limitations representing the degree of effluent reduction attainable by the application of the best practicable control technology currently available (BPT):

Effluent characteristic	Effluent limitations	
	Maximum for any 1 day	Average of daily values for 30 consecutive days shall not exceed—
	Metric units (kg/kkg of product)	
COD	12.00	8.00
BOD5	0.60	.40
TSS	0.98	.65
Oil and grease	0.24	.16
pH	(1)	(1)
	English units (lb/1,000 lb of product)	
COD	12.00	8.00
BOD5	0.60	.40
TSS	0.98	.65
Oil and grease	0.24	.16
pH	(1)	(1)

[1] Within the range 6.0 to 9.0.

[39 FR 6662, Feb. 21, 1974, as amended at 60 FR 33963, June 29, 1995]

§ 428.23 Effluent limitations guidelines representing the degree of effluent reduction attainable by the application of the best available technology economically achievable.

The following limitations establish the quantity or quality of pollutants or pollutant properties, controlled by this section, which may be discharged by a point source subject to the provisions of this subpart after application of the best available technology economically achievable:

Effluent characteristic	Effluent limitations	
	Maximum for any 1 day	Average of daily values for 30 consecutive days shall not exceed—
	Metric units (kg/kkg of product)	
COD	3.12	2.08
BOD5	0.12	.08
TSS	0.24	.16
Oil and grease	0.12	.08
pH	(1)	(1)
	English units (lb/1,000 lb of product)	
COD	3.12	2.08
BOD5	0.12	.08
TSS	0.24	.16
Oil and grease	0.12	.08
pH	(1)	(1)

[1] Within the range 6.0 to 9.0.

§ 428.24 [Reserved]

§ 428.25 Standards of performance for new sources.

The following standards of performance establish the quantity or quality of pollutants or pollutant properties, controlled by this section, which may be discharged by a new source subject to the provisions of this subpart: The limitations shall be as specified in § 428.22.

Subpart C—Solution Crumb Rubber Subcategory

§ 428.30 Applicability; description of the solution crumb rubber subcategory.

The provisions of this subpart are applicable to discharges of pollutants resulting from the manufacture of crumb rubber.

§ 428.31 Specialized definitions.

For the purpose of this subpart:

(a) Except as provided below, the general definitions, abbreviations and methods of analysis set forth in 40 CFR part 401 shall apply to this subpart.

[39 FR 6662, Feb. 21, 1974, as amended at 40 FR 18173, Apr. 25, 1975]

§ 428.32 Effluent limitations guidelines representing the degree of effluent reduction attainable by the application of the best practicable control technology currently available.

Except as provided in §§ 125.30 through 125.32, any existing point source subject to this subpart shall achieve the following effluent limitations representing the degree of effluent reduction attainable by the application of the best practicable control technology currently available (BPT):

Effluent characteristic	Effluent limitations	
	Maximum for any 1 day	Average of daily values for 30 consecutive days shall not exceed—
	Metric units (kg/kkg of product)	
COD	5.91	3.94
BOD5	0.60	.40
TSS	0.98	.65
Oil and grease	0.24	.16
pH	(1)	(1)
	English units (lb/1,000 lb of product)	
COD	5.91	3.94
BOD5	0.60	.40
TSS	0.98	.65
Oil and grease	0.24	.16
pH	(1)	(1)

[1] Within the range 6.0 to 9.0.

[39 FR 6662, Feb. 21, 1974, as amended at 60 FR 33963, June 29, 1995]

§ 428.33 Effluent limitations guidelines representing the degree of effluent reduction attainable by the application of the best available technology economically achievable.

The following limitations establish the quantity or quality of pollutants or pollutant properties, controlled by this section, which may be discharged by a point source subject to the provisions of this subpart after application of the best available technology economically achievable:

Effluent characteristic	Effluent limitations	
	Maximum for any 1 day	Average of daily values for 30 consecutive days shall not exceed—
	Metric units (kg/kkg of product)	
COD	3.12	2.08
BOD5	0.12	.08
TSS	0.24	.16
Oil and grease	0.12	.08
pH	(1)	(1)
	English units (lb/1,000 lb of product)	
COD	3.12	2.08
BOD5	0.12	.08
TSS	0.24	.16
Oil and grease	0.12	.08
pH	(1)	(1)

[1] Within the range 6.0 to 9.0.

§ 428.34 [Reserved]

§ 428.35 Standards of performance for new sources.

The following standards of performance establish the quantity or quality of pollutants or pollutant properties, controlled by this section, which may be discharged by a new source subject to the provisions of this subpart: The limitations shall be as specified in § 428.32.

Subpart D—Latex Rubber Subcategory

§ 428.40 Applicability; description of the latex rubber subcategory.

The provisions of this subpart are applicable to discharges of pollutants resulting from the manufacture of latex rubber.

§ 428.41 Specialized definitions.

For the purpose of this subpart:

(a) Except as provided below, the general definitions, abbreviations and methods of analysis set forth in 40 CFR part 401 shall apply to this subpart.

[39 FR 6662, Feb. 21, 1974, as amended at 40 FR 18173, Apr. 25, 1975]

§ 428.42 Effluent limitations guidelines representing the degree of effluent reduction attainable by the application of the best practicable control technology currently available.

Except as provided in §§ 125.30 through 125.32, any existing point source subject to this subpart shall achieve the following effluent limitations representing the degree of effluent reduction attainable by the application of the best practicable control technology currently available (BPT):

Effluent characteristic	Effluent limitations	
	Maximum for any 1 day	Average of daily values for 30 consecutive days shall not exceed—
	Metric units (kg/kkg of product)	
COD	10.27	6.85
BOD5	0.51	.34
TSS	0.82	.55
Oil and grease	0.21	.14
pH	(1)	(1)
	English units (lb/1,000 lb of product)	
COD	10.27	6.85
BOD5	0.51	.34
TSS	0.82	.55
Oil and grease	0.21	.14
pH	(1)	(1)

[1] Within the range 6.0 to 9.0.

[39 FR 6662, Feb. 21, 1974, as amended at 60 FR 33963, June 29, 1995]

§ 428.43 Effluent limitations guidelines representing the degree of effluent reduction attainable by the application of the best available technology economically achievable.

The following limitations establish the quantity or quality of pollutants or pollutant properties, controlled by this section, which may be discharged by a point source subject to the provisions of this subpart after application of the best available technology economically achievable:

Effluent characteristic	Effluent limitations	
	Maximum for any 1 day	Average of daily values for 30 consecutive days shall not exceed—
	Metric units (kg/kkg of product)	
COD	2.66	1.78
BOD5	0.11	.07
TSS	0.21	.14
Oil and grease	0.11	.07
pH	(1)	(1)
	English units (lb/1,000 lb of product)	
COD	2.66	1.78
BOD5	0.11	.07
TSS	0.21	.14
Oil and grease	0.11	.07
pH	(1)	(1)

[1] Within the range 6.0 to 9.0.

§ 428.44 [Reserved]

§ 428.45 Standards of performance for new sources.

The following standards of performance establish the quantity or quality of pollutants or pollutant properties, controlled by this section, which may be discharged by a new point source subject to the provisions of this subpart: The limitations shall be as specified for § 428.42.

§ 428.46 Pretreatment standards for new sources.

Any new source subject to this subpart that introduces process wastewater pollutants into a publicly owned treatment works must comply with 40 CFR part 403.

[60 FR 33963, June 29, 1995]

Subpart E—Small-Sized General Molded, Extruded, and Fabricated Rubber Plants Subcategory

SOURCE: 40 FR 2336, Jan. 10, 1975, unless otherwise noted.

§ 428.50 Applicability; description of the small-sized general molded, extruded, and fabricated rubber plants subcategory.

The following provisions of this subpart are applicable to process waste water discharges resulting from the production of molded, extruded, and

fabricated rubber products, foam rubber backing, rubber cement-dipped goods, and retreaded tires by small-sized plants. Specifically excluded from the provisions of this subpart are the discharges resulting from the production of latex-based products, tires and inner tubes, and those discharges from textile plants subject to the provisions of part 410 of this chapter.

§ 428.51 Specialized definitions.

For the purpose of this subpart:

(a) Except as provided below, the general definitions, abbreviations and methods of analysis set forth in part 401 of this chapter shall apply to this subpart.

(b) The term ''raw material'' shall mean all natural and synthetic rubber, carbon black, oils, chemical compounds, and fabric used in the manufacture of general molded, extruded, and fabricated rubber products.

(c) The term ''raw material equivalent'' shall be equal to the raw material usage multiplied by the volume of air scrubbed via wet scrubbers divided by the total volume of air scrubbed.

(d) The term ''small-sized plants'' shall mean plants which process less than 3,720 kg/day (8,200 lbs/day) of raw materials.

§ 428.52 Effluent limitations guidelines representing the degree of effluent reduction attainable by the application of the best practicable control technology currently available.

Except as provided in §§ 125.30 through 125.32, any existing point source subject to this subpart shall achieve the following effluent limitations representing the degree of effluent reduction attainable by the application of the best practicable control technology currently available (BPT):

(a) The following limitations establish the quantity or quality of pollutants or pollutant properties, controlled by this section, which may be discharged by a point source subject to the provisions of this subpart after application of the best practicable control technology currently available:

Effluent characteristic	Effluent limitations	
	Maximum for any 1 day	Average of daily values for 30 consecutive days shall not exceed—
	Metric units (kg/kkg of raw material)	
Oil and grease	0.70	0.25
TSS	1.28	0.64
pH	(1)	(1)
	English units (lb/1,000 lb of raw material)	
Oil and grease	0.70	0.25
TSS	1.28	0.65
pH	(1)	(1)

[1] Within the range 6.0 to 9.0.

(b) The following limitations establish the quantity or quality of pollutants or pollutant properties, controlled by this section, and attributable to lead-sheathed hose production, which may be discharged by a point source subject to the provisions of this subpart after application of the best practicable control technology currently available, in addition to the limitations set forth by § 428.52(a):

Effluent characteristic	Effluent limitations	
	Maximum for any 1 day	Average of daily values for 30 consecutive days shall not exceed—
	Metric units (kg/kkg of raw material)	
Lead	0.0017	0.0007
	English units (lb/1,000 lb of raw material)	
Lead	0.0017	0.0007

(c) The following limitations establish the quantity or quality of pollutants or pollutant properties, controlled by this section, and attributable to wet scrubbers, which may be discharged by a point source subject to the provisions of this subpart after application of the best practicable control technology currently available, in addition to the limitations set forth by § 428.52(a):

Effluent characteristic	Effluent limitations	
	Maximum for any 1 day	Average of daily values for 30 consecutive days shall not exceed—
	Metric units (kg/kkg of raw material equivalent)	
TSS	5.8	2.9
	English units (lb/1,000 lb of raw material equivalent)	
TSS	5.8	2.9

[40 FR 2336, Jan. 10, 1975, as amended at 60 FR 33963, June 29, 1995]

§ 428.53 Effluent limitations guidelines representing the degree of effluent reduction attainable by the application of the best available technology economically achievable.

(a) The following limitations establish the quantity or quality of pollutants or pollutant properties, controlled by this section, which may be discharged by a point source subject to the provisions of this subpart after application of the best available technology economically achievable:

Effluent characteristic	Effluent limitations	
	Maximum for any 1 day	Average of daily values for 30 consecutive days shall not exceed—
	Metric units (kg/kkg of raw material)	
Oil and grease	0.70	0.25
TSS	1.28	0.64
pH	(1)	(1)
	English units (lb/1,000 lb of raw material)	
Oil and grease	0.70	0.25
TSS	1.28	0.64
pH	(1)	(1)

[1] Within the range 6.0 to 9.0.

(b) The following limitations establish the quantity or quality of pollutants or pollutant properties, controlled by this section, and attributable to lead-sheathed hose production, which may be discharged by a point source subject to the provisions of this subpart after application of the best available technology economically achievable, in addition to the limitations set forth by § 428.53(a):

Effluent characteristic	Effluent limitations	
	Maximum for any 1 day	Average of daily values for 30 consecutive days shall not exceed—
	Metric units (kg/kkg of raw material)	
Lead	0.0017	0.0007
	English units (lb/1,000 lb of raw material)	
Lead	0.0017	0.0007

(c) The following limitations establish the quantity or quality of pollutants or pollutant properties, controlled by this section, and attributable to wet scrubbers, which may be discharged by a point source subject to the provisions of this subpart after application of the best available technology economically achievable, in addition to the limitations set forth by § 428.53(a):

Effluent characteristic	Effluent limitations	
	Maximum for any 1 day	Average of daily values for 30 consecutive days shall not exceed—
	Metric units (kg/kkg of raw material equivalent)	
TSS	1.0	0.5
	English units (lb/1,000 lb of raw material equivalent)	
TSS	1.0	0.5

§ 428.54 [Reserved]

§ 428.55 Standards of performance for new sources.

(a) The following standards of performance establish the quantity or quality of pollutants or pollutant properties, controlled by this section, which may be discharged by a new source subject to the provisions of this subpart:

Effluent characteristic	Effluent limitations	
	Maximum for any 1 day	Average of daily values for 30 consecutive days shall not exceed—
	Metric units (kg/kkg of raw material)	
Oil and grease	0.70	0.25
TSS	1.28	0.64
pH	(1)	(1)
	English units (lb/1,000 lb of raw material)	
Oil and grease	0.70	0.25
TSS	1.28	0.64
pH	(1)	(1)

[1] Within the range 6.0 to 9.0.

(b) The following standards of performance establish the quantity or quality of pollutants or pollutant properties, controlled by this section, and attributable to lead-sheathed hose production, which may be discharged by a new source subject to the provisions of this subpart, in addition to the limitations set forth by § 428.55(a):

Effluent characteristic	Effluent limitations	
	Maximum for any 1 day	Average of daily values for 30 consecutive days shall not exceed—
	Metric units (kg/kkg of raw material)	
Lead	0.0017	0.0007
	English units (lb/1,000 lb of raw material)	
Lead	0.0017	0.0007

§ 428.56 Pretreatment standards for new sources.

Any new source subject to this subpart that introduces process wastewater pollutants into a publicly owned treatment works must comply with 40 CFR part 403, in addition to the limitations set forth in paragraphs (a) and (b) of this section.

(a) The following pretreatment standard establishes the quantity or quality of pollutants or pollutant properties, controlled by this section, which may be discharged to a publicly owned treatment works by a new point source subject to the provisions of this subpart:

Pollutant or pollutant property	Pretreatment standard
pH	No limitation.
TSS	Do.
Oil and grease	100 mg/l daily maximum.

(b) The following pretreatment standard establishes the quantity or quality of pollutants or pollutant properties, controlled by this section, and attributable to lead-sheathed hose production, which may be discharged to a publicly owned treatment works by a new point source subject to the provisions of this subpart, in addition to the limitations set forth by § 428.56(a):

Pollutant or pollutant property	Pretreatment standards	
	Maximum for any 1 day	Average of daily values for thirty consecutive days shall not exceed—
	Metric units (kg/kkg of raw material)	
Lead	0.0017	0.0007
	English units (lb/1,000 lb of raw material)	
Lead	0.0017	0.0007

[40 FR 2336, Jan. 10, 1975, as amended at 60 FR 33963, June 29, 1995]

Subpart F—Medium-Sized General Molded, Extruded, and Fabricated Rubber Plants Subcategory

SOURCE: 40 FR 2338, Jan. 10, 1975, unless otherwise noted.

§ 428.60 Applicability; description of the medium-sized general molded, extruded, and fabricated rubber plants subcategory.

The following provisions of this subpart are applicable to process waste water discharges resulting from the production of molded, extruded, and fabricated rubber products, foam rubber backing, rubber cement-dipped goods, and retreaded tires by medium-sized plants. Specifically excluded from the provisions of this subpart are the discharges resulting from the production of latex-based products, tires and inner tubes, and those discharges from

textile plants subject to the provisions of part 410 of this chapter.

§ 428.61 Specialized definitions.

For the purpose of this subpart:

(a) Except as provided below, the general definitions, abbreviations and methods of analysis set forth in part 401 of this chapter shall apply to this subpart.

(b) The term ''raw material'' shall mean all natural and synthetic rubber, carbon black, oils, chemical compounds, and fabric used in the manufacture of general molded, extruded, and fabricated rubber products.

(c) The term ''raw material equivalent'' shall be equal to the raw material usage multiplied by the volume of air scrubbed via wet scrubbers divided by the total volume of air scrubbed.

(d) The term ''medium-sized plants'' shall mean plants which process between 3,720 kg/day (8,200 lbs/day) and 10,430 kg/day (23,000 lbs/day) of raw materials.

§ 428.62 Effluent limitations guidelines representing the degree of effluent reduction attainable by the application of the best practicable control technology currently available.

Except as provided in §§ 125.30 through 125.32, any existing point source subject to this subpart shall achieve the following effluent limitations representing the degree of effluent reduction attainable by the application of the best practicable control technology currently available (BPT):

(a) The following limitations establish the quantity or quality of pollutants or pollutant properties, controlled by this section, which may be discharged by a point source subject to the provisions of this subpart after application of the best practicable control technology currently available:

Effluent characteristic	Effluent limitations	
	Maximum for any 1 day	Average of daily values for 30 consecutive days shall not exceed—
	Metric units (kg/kkg of raw material)	
Oil and grease	0.42	0.15
TSS	0.80	0.40
pH	(1)	(1)
	English units (lb/1,000 lb of raw material)	
Oil and grease	0.42	0.15
TSS	0.80	0.40
pH	(1)	(1)

[1] Within the range 6.0 to 9.0.

(b) The following limitations establish the quantity or quality of pollutants or pollutant properties, controlled by this section, and attributable to leadsheathed hose production, which may be discharged by a point source subject to the provisions of this subpart after application of the best practicable control technology currently available, in addition to the limitations set forth by § 428.62(a):

Effluent characteristic	Effluent limitations	
	Maximum for any 1 day	Average of daily values for 30 consecutive days shall not exceed—
	Metric units (kg/kkg of raw material)	
Lead	0.0017	0.0007
	English units (lb/1,000 lb of raw material)	
Lead	0.0017	0.0007

(c) The following limitations establish the quantity or quality of pollutants or pollutant properties, controlled by this section, and attributable to wet scrubbers, which may be discharged by a point source subject to the provisions of this subpart after application of the best practicable control technology currently available, in addition to the limitations set forth by § 428.62(a):

Effluent characteristic	Effluent limitations	
	Maximum for any 1 day	Average of daily values for 30 consecutive days shall not exceed—
	Metric units (kg/kkg of raw material equivalent)	
TSS	5.8	2.9
	English units (lb/1,000 lb of raw material equivalent)	
TSS	5.8	2.9

[40 FR 2338, Jan. 10, 1975, as amended at 60 FR 33963, June 29, 1995]

§ 428.63 Effluent limitations guidelines representing the degree of effluent reduction attainable by the application of the best available technology economically achievable.

(a) The following limitations establish the quantity or quality of pollutants or pollutant properties, controlled by this section, which may be discharged by a point source subject to the provisions of this subpart after application of the best available technology economically achievable:

Effluent characteristic	Effluent limitations	
	Maximum for any 1 day	Average of daily values for 30 consecutive days shall not exceed—
	Metric units (kg/kkg of raw material)	
Oil and grease	0.42	0.15
TSS	0.80	0.40
pH	(1)	(1)
	English units (lb/1,000 lb of raw material)	
Oil and grease	0.42	0.15
TSS	0.80	0.40
pH	(1)	(1)

[1] Within the range 6.0 to 9.0.

(b) The following limitations establish the quantity or quality of pollutants or pollutant properties, controlled by this section, and attributable to lead-sheathed hose production, which may be discharged by a point source subject to the provisions of this subpart after application of the best available technology economically achievable, in addition to the limitations set forth by § 428.63(a):

Effluent characteristic	Effluent limitations	
	Maximum for any 1 day	Average of daily values for 30 consecutive days shall not exceed—
	Metric units (kg/kkg of raw material)	
Lead	0.0017	0.0007
	English units (lb/1,000 lb of raw material)	
Lead	0.0017	0.0007

(c) The following limitations establish the quantity or quality of pollutants or pollutant properties, controlled by this section, and attributable to wet scrubbers, which may be discharged by a point source subject to the provisions of this subpart after application of the best available technology economically achievable, in addition to the limitations set forth by § 428.63:

Effluent characteristic	Effluent limitations	
	Maximum for any 1 day	Average of daily values for 30 consecutive days shall not exceed—
	Metric units (kg/kkg of raw material equivalent)	
TSS	1.0	0.5
	English units (lb/1,000 lb of raw material equivalent)	
TSS	1.0	0.5

§ 428.64 [Reserved]

§ 428.65 Standards of performance for new sources.

(a) The following standards of performance establish the quantity or quality of pollutants or pollutant properties, controlled by this section, which may be discharged by a new source subject to the provisions of this subpart:

Effluent characteristic	Effluent limitations	
	Maximum for any 1 day	Average of daily values for 30 consecutive days shall not exceed—
	Metric units (kg/kkg of raw material)	
Oil and grease	0.42	0.15
TSS	0.80	0.40
pH	(1)	(1)
	English units (lb/1,000 lb of raw material)	
Oil and grease	0.42	0.0
TSS	0.80	0.4
pH	(1)	(1)

[1] Within the range 6.0 to 9.0.

(b) The following standards of performance establish the quantity or quality of pollutants or pollutant properties, controlled by this section, and attributable to lead-sheathed hose production, which may be discharged by a new source subject to the provisions of this subpart, in addition to the limitations set forth by § 428.65(a):

Effluent characteristic	Effluent limitations	
	Maximum for any 1 day	Average of daily values for 30 consecutive days shall not exceed—
	Metric units (kg/kkg of raw material)	
Lead	0.0017	0.0007
	English units (lb/1,000 lb of raw material)	
Lead	0.0017	0.0007

§ 428.66 Pretreatment standards for new sources.

Any new source subject to this subpart that introduces process wastewater pollutants into a publicly owned treatment works must comply with 40 CFR part 403, in addition to the limitations set forth in paragraphs (a) and (b) of this section.

(a) The following pretreatment standard establishes the quantity or quality of pollutants or pollutant properties controlled by this section which may be discharged to a publicly owned treatment works by a new point source subject to the provisions of this subpart:

Pollutant or pollutant property	Pretreatment standard
pH	No limitation.
TSS	Do.
Oil and grease	100 mg/l daily maximum.

(b) The following pretreatment standard establishes the quantity or quality of pollutants or pollutant properties, controlled by this section, and attributable to lead-sheathed hose production, which may be discharged to a publicly owned treatment works by a new point source subject to the provisions of this subpart, in addition to the limitations set forth by § 428.66(a):

Pollutant or pollutant property	Pretreatment standards	
	Maximum for any 1 day	Average of daily values for thirty consecutive days shall not exceed—
	Metric units (kg/kkg of raw material)	
Lead	0.0017	0.0007
	English units (lb/1,000 lb of raw material)	
Lead	0.0017	0.0007

[40 FR 2338, Jan. 10, 1975, as amended at 60 FR 33963, June 29, 1995]

Subpart G—Large-Sized General Molded, Extruded, and Fabricated Rubber Plants Subcategory

SOURCE: 40 FR 2340, Jan. 10, 1975, unless otherwise noted.

§ 428.70 Applicability; description of the large-sized general molded, extruded, and fabricated rubber plants subcategory.

The following provisions of this subpart are applicable to process waste water discharges resulting from the production of molded, extruded, and fabricated rubber products, foam rubber backing, rubber cement-dipped goods, and retreaded tires by large-sized plants. Specifically excluded from the provisions of this subpart are the discharges resulting from the production of latex-based products, tires and inner tubes, and those discharges from

textile plants subject to the provisions of part 410 of this chapter.

§ 428.71 Specialized definitions.

For the purpose of this subpart:

(a) Except as provided below, the general definitions, abbreviations and methods of analysis set forth in part 401 of this chapter shall apply to this subpart.

(b) The term ''raw material'' shall mean all natural and synthetic rubber, carbon black, oils, chemical compounds, and fabric used in the manufacture of general molded, extruded, and fabricated rubber products.

(c) The term ''raw material equivalent'' shall be equal to the raw material usage multiplied by the volume of air scrubbed via wet scrubbers divided by the total volume of air scrubbed.

(d) The term ''large-sized plants'' shall mean plants which process more than 10,430 kg/day (23,000 lbs/day) of raw materials.

§ 428.72 Effluent limitations guidelines representing the degree of effluent reduction attainable by the application of the best practicable control technology currently available.

Except as provided in §§ 125.30 through 125.32, any existing point source subject to this subpart shall achieve the following effluent limitations representing the degree of effluent reduction attainable by the application of the best practicable control technology currently available (BPT):

(a) The following limitations establish the quantity or quality of pollutants or pollutant properties, controlled by this section, which may be discharged by a point source subject to the provisions of this subpart after application of the best practicable control technology currently available:

Effluent characteristic	Effluent limitations	
	Maximum for any 1 day	Average of daily values for 30 consecutive days shall not exceed—
	Metric units (kg/kkg of raw material)	
Oil and grease	0.26	0.093
TSS	0.50	0.25
pH	(1)	(1)
	English units (lb/1,000 lb of raw material)	
Oil and grease	0.26	0.093
TSS	0.50	0.25
pH	(1)	(1)

[1] Within the range 6.0 to 9.0.

(b) The following limitations establish the quantity or quality of pollutants or pollutant properties, controlled by this section, and attributable to lead-sheathed hose production, which may be discharged by a point source subject to the provisions of this subpart after application of the best practicable control technology currently available, in addition to the limitations set forth by § 428.72(a):

Effluent characteristic	Effluent limitations	
	Maximum for any 1 day	Average of daily values for 30 consecutive days shall not exceed—
	Metric units (kg/kkg of raw material)	
Lead	0.0017	0.0007
	English units (lb/1,000 lb of raw material)	
Lead	0.0017	0.0007

(c) The following limitations establish the quantity or quality of pollutants or pollutant properties, controlled by this section, and attributable to wet scrubbers, which may be discharged by a point source subject to the provisions of this subpart after application of the best practicable control technology

currently available, in addition to the limitations set forth by § 428.72(a):

Effluent characteristic	Effluent limitations	
	Maximum for any 1 day	Average of daily values for 30 consecutive days shall not exceed—
	Metric units (kg/kkg of raw material equivalent)	
Lead	5.8	2.9
	English units (lb/1,000 lb of raw material equivalent)	
Lead	5.8	2.9

[40 FR 2340, Jan. 10, 1975, as amended at 60 FR 33963, June 29, 1995]

§ 428.73 Effluent limitations guidelines representing the degree of effluent reduction attainable by the application of the best available technology economically achievable.

(a) The following limitations establish the quantity or quality of pollutants or pollutant properties, controlled by this section, which may be discharged by a point source subject to the provisions of this subpart after application of the best available technology economically achievable:

Effluent characteristic	Effluent limitations	
	Maximum for any 1 day	Average of daily values for 30 consecutive days shall not exceed—
	Metric units (kg/kkg of raw material)	
Oil and grease	0.26	0.093
TSS	0.50	0.25
pH	(1)	(1)
	English units (lb/1,000 lb of raw material)	
Oil and grease	0.26	0.093
TSS	0.50	0.25
pH	(1)	(1)

[1] Within the range 6.0 to 9.0.

(b) The following limitations establish the quantity or quality of pollutants or pollutant properties, controlled by this section, and attributable to lead-sheathed hose production, which may be discharged by a point source subject to the provisions of this subpart after application of the best available technology economically achievable, in addition to the limitations set forth by § 428.73(a):

Effluent characteristic	Effluent limitations	
	Maximum for any 1 day	Average of daily values for 30 consecutive days shall not exceed—
	Metric units (kg/kkg of raw material)	
Lead	0.0017	0.0007
	English units (lb/1,000 lb of raw material)	
Lead	0.0017	0.0007

(c) The following limitations establish the quantity or quality of pollutants or pollutant properties, controlled by this section, and attributable to wet scrubbers, which may be discharged by a point source subject to the provisions of this subpart after application of the best available technology economically achievable, in addition to the limitations set forth by § 428.73(a):

Effluent characteristic	Effluent limitations	
	Maximum for any 1 day	Average of daily values for 30 consecutive days shall not exceed—
	Metric units (kg/kkg of raw material equivalent)	
Lead	1.0	0.5
	English units (lb/1,000 lb of raw material equivalent)	
Lead	1.0	0.5

§ 428.74 [Reserved]

§ 428.75 Standards of performance for new sources.

(a) The following standards of performance establish the quantity or quality of pollutants or pollutant properties, controlled by this section, which may be discharged by a new source subject to the provisions of this subpart:

Effluent characteristic	Effluent limitations	
	Maximum for any 1 day	Average of daily values for 30 consecutive days shall not exceed—
	Metric units (kg/kkg of raw material)	
Oil and grease	0.26	0.093
TSS	0.50	0.25
pH	(1)	(1)
	English units (lb/1,000 lb of raw material)	
Oil and grease	0.26	0.093
TSS	0.50	0.25
pH	(1)	(1)

[1] Within the range 6.0 to 9.0.

(b) The following standards of performance establish the quantity or quality of pollutants or pollutant properties, controlled by this section and attributable to lead-sheathed hose production, which may be discharged by a new source subject to the provisions of this subpart, in addition to the limitations set forth by § 428.75(a):

Effluent characteristic	Effluent limitations	
	Maximum for any 1 day	Average of daily values for 30 consecutive days shall not exceed—
	Metric units (kg/kkg of raw material)	
Lead	0.0017	0.0007
	English units (lb/1,000 lb of raw material)	
Lead	0.0017	0.0007

§ 428.76 Pretreatment standards for new sources.

Any new source subject to this subpart that introduces process wastewater pollutants into a publicly owned treatment works must comply with 40 CFR part 403, in addition to the limitations set forth in paragraphs (a) and (b) of this section.

(a) The following pretreatment standard establishes the quantity or quality of pollutants or pollutant properties, controlled by this section, which may be discharged to a publicly owned treatment works by a new point source subject to the provisions of this subpart:

Pollutant or pollutant property	Pretreatment standard
pH	No limitation.
TSS	Do.
Oil and grease	100 mg/l daily maximum.

(b) The following pretreatment standard establishes the quantity or quality of pollutants or pollutant properties controlled by this section, and attributable to lead-sheathed hose production, which may be discharged to a publicly owned treatment works by a new point source subject to the provisions of this subpart, in addition to the limitations set forth by § 428.76(a):

Effluent characteristic	Effluent limitations	
	Maximum for any 1 day	Average of daily values for 30 consecutive days shall not exceed—
	Metric units (kg/kkg of raw material)	
Lead	0.0017	0.0007
	English units (lb/1,000 lb of raw material)	
Lead	0.0017	0.0007

[40 FR 2340, Jan. 10, 1975, as amended at 60 FR 33963, June 29, 1995]

Subpart H—Wet Digestion Reclaimed Rubber Subcategory

SOURCE: 40 FR 2341, Jan. 10, 1975, unless otherwise noted.

§ 428.80 Applicability; description of the wet digestion reclaimed rubber subcategory.

The provisions of this subpart are applicable to process waste water discharges resulting from the production of reclaimed rubber by use of the wet digestion process.

§ 428.81 Specialized definitions.

For the purpose of this subpart:

(a) Except as provided below, the general definitions, abbreviations and methods of analysis set forth in part 401 of this chapter shall apply to this subpart.

§ 428.82 Effluent limitations guidelines representing the degree of effluent reduction attainable by the application of the best practicable control technology currently available.

Except as provided in §§ 125.30 through 125.32, any existing point source subject to this subpart shall achieve the following effluent limitations representing the degree of effluent reduction attainable by the application of the best practicable control technology currently available (BPT):

Effluent characteristic	Effluent limitations	
	Maximum for any 1 day	Average of daily values for 30 consecutive days shall not exceed—
	Metric units (kg/kkg of product)	
COD	14.7	6.11
Oil and grease	0.40	0.144
TSS	1.04	0.52
pH	(1)	(1)
	English units (lb/1,000 lb of product)	
COD	14.7	6.11
Oil and grease	0.40	0.144
TSS	1.04	0.52
pH	(1)	(1)

[1] Within the range 6.0 to 9.0.

[40 FR 2341, Jan. 10, 1975, as amended at 60 FR 33963, June 29, 1995]

§ 428.83 Effluent limitations guidelines representing the degree of effluent reduction attainable by the application of the best available technology economically achievable.

The following limitations establish the quantity or quality of pollutants or pollutant properties, controlled by this section, which may be discharged by a point source subject to the provisions of this subpart after application of the best available technology economically achievable:

Effluent characteristic	Effluent limitations	
	Maximum for any 1 day	Average of daily values for 30 consecutive days shall not exceed—
	Metric units (kg/kkg of product)	
COD	14.7	6.11
Oil and grease	0.40	0.144
TSS	1.04	0.52
pH	(1)	(1)
	English units (lb/1,000 lb of product)	
COD	14.7	6.11
Oil and grease	0.40	0.144
TSS	1.04	0.52
pH	(1)	(1)

[1] Within the range 6.0 to 9.0.

§ 428.84 [Reserved]

§ 428.85 Standards of performance for new sources.

The following standards of performance establish the quantity or quality of pollutants or pollutant properties, controlled by this section, which may be discharged by a new source subject to the provisions of this subpart:

Effluent characteristic	Effluent limitations	
	Maximum for any 1 day	Average of daily values for 30 consecutive days shall not exceed—
	Metric units (kg/kkg of product)	
COD	14.7	6.11
Oil and grease	0.40	0.144
TSS	1.04	0.52
pH	(1)	(1)
	English units (lb/1,000 lb of product)	
COD	14.7	6.11
Oil and grease	0.40	0.144
TSS	1.04	0.52
pH	(1)	(1)

[1] Within the range 6.0 to 9.0.

§ 428.86 Pretreatment standards for new sources.

Any new source subject to this subpart that introduces process wastewater pollutants into a publicly owned treatment works must comply with 40 CFR part 403. In addition, the following pretreatment standard establishes the quantity or quality of pollutants or

pollutant properties, controlled by this section, which may be discharged to a publicly owned treatment works by a new point source subject to the provisions of this subpart:

Pollutant or pollutant property	Pretreatment standards	
	Maximum for any 1 day	Average of daily values for 30 consecutive days shall not exceed—
	Metric units (kg/kkg of product)	
COD	14.7	6.11
Oil and grease	(1)	(1)
TSS	(2)	(2)
pH	(2)	(2)
	English units (lb/1,000 lb of product)	
COD	14.7	6.11
Oil and grease	(1)	(1)
TSS	(2)	(2)
pH	(2)	(2)

[1] 100 mg/l.
[2] No limitation.

[40 FR 2341, Jan. 10, 1975, as amended at 60 FR 33964, June 29, 1995]

Subpart I—Pan, Dry Digestion, and Mechanical Reclaimed Rubber Subcategory

SOURCE: 40 FR 2342, Jan. 10, 1975, unless otherwise noted.

§ 428.90 Applicability; description of the pan, dry digestion, and mechanical reclaimed rubber subcategory.

The provisions of this subpart are applicable to process waste water discharges resulting from the production of reclaimed rubber except when produced by the wet digestion process.

§ 428.91 Specialized definitions.

For the purpose of this subpart:

(a) Except as provided below, the general definitions, abbreviations and methods of analysis set forth in part 401 of this chapter shall apply to this subpart.

§ 428.92 Effluent limitations guidelines representing the degree of effluent reduction attainable by the application of the best practicable control technology currently available.

Except as provided in §§ 125.30 through 125.32, any existing point source subject to this subpart shall achieve the following effluent limitations representing the degree of effluent reduction attainable by the application of the best practicable control technology currently available (BPT):

(a) The following limitations establish the quantity or quality of pollutants or pollutant properties controlled by this section, which may be discharged by a point source subject to the provisions of this subpart after application of the best practicable control technology currently available:

Effluent characteristic	Effluent limitations	
	Maximum for any 1 day	Average of daily values for 30 consecutive days shall not exceed—
	Metric units (kg/kkg of product)	
Oil and grease	0.40	0.144
TSS	0.384	0.192
pH	(1)	(1)
	English units (lb/1,000 lb of product)	
Oil and grease	0.40	0.144
TSS	0.384	0.192
pH	(1)	(1)

[1] Within the range 6.0 to 9.0.

(b) The following limitations establish the quantity or quality of pollutants or pollutant properties, controlled by this section and attributable to pan, dry digestion, and mechanical reclaimed rubber processes which are integrated with a wet digestion reclaimed process, which may be discharged by a point source subject to the provisions of this subpart after application of the best practicable control technology currently available, in addition to the limitations set forth by § 428.92(a):

Effluent characteristic	Effluent limitations	
	Maximum for any 1 day	Average of daily values for 30 consecutive days shall not exceed—
	Metric units (kg/kkg of product)	
COD	6.7	2.8
	English units (lb/1,000 lb of product)	
COD	6.7	2.8

[40 FR 2342, Jan. 10, 1975, as amended at 60 FR 33964, June 29, 1995]

§ 428.93 Effluent limitations guidelines representing the degree of effluent reduction attainable by the application of the best available technology economically achievable.

(a) The following limitations establish the quantity or quality of pollutants or pollutant properties, controlled by this section, which may be discharged by a point source subject to the provisions of this subpart after application of the best available technology economically achievable:

Effluent characteristic	Effluent limitations	
	Maximum for any 1 day	Average of daily values for 30 consecutive days shall not exceed—
	Metric units (kg/kkg of product)	
Oil and grease	0.40	0.144
TSS	0.384	0.192
pH	(1)	(1)
	English units (lb/1,000 lb of product)	
Oil and grease	0.40	0.144
TSS	0.384	0.192
pH	(1)	(1)

[1] Within the range 6.0 to 9.0.

(b) The following limitations establish the quantity or quality of pollutants or pollutant properties, controlled by this section, and attributable to pan, dry digestion, and mechanical reclaimed rubber processes which are integrated with a wet digestion reclaimed rubber process, which may be discharged by a point source subject to the provisions of this subpart after application of the best available technology economically achievable in addition to the limitations set forth by § 428.93(a):

Effluent characteristic	Effluent limitations	
	Maximum for any 1 day	Average of daily values for 30 consecutive days shall not exceed—
	Metric units (kg/kkg of product)	
COD	6.7	2.8
	English units (lb/1,000 lb of product)	
COD	6.7	2.8

§ 428.94 [Reserved]

§ 428.95 Standards of performance for new sources.

(a) The following standards of performance establish the quantity or quality of pollutants or pollutant properties, controlled by this section, which may be discharged by a new source subject to the provisions of this subpart:

Effluent characteristic	Effluent limitations	
	Maximum for any 1 day	Average of daily values for 30 consecutive days shall not exceed—
	Metric units (kg/kkg of product)	
Oil and grease	0.40	0.144
TSS	0.384	0.192
pH	(1)	(1)
	English units (lb/1,000 lb of product)	
Oil and grease	0.40	0.144
TSS	0.384	0.192
pH	(1)	(1)

[1] Within the range 6.0 to 9.0.

(b) The following standards of performance establish the quantity or quality of pollutants or pollutant properties, controlled by this section and attributable to pan, dry digestion, and mechanical reclaimed rubber processes which are integrated with a wet digestion reclaimed rubber process, which may be discharged by a new source subject to the provisions of this subpart, in addition to the limitations set forth by § 428.95:

Effluent characteristic	Effluent limitations	
	Maximum for any 1 day	Average of daily values for 30 consecutive days shall not exceed—
	Metric units (kg/kkg of product)	
COD	6.7	2.8
	English units (lb/1,000 lb of product)	
COD	6.7	2.8

§ 428.96 Pretreatment standards for new sources.

Any new source subject to this subpart that introduces process wastewater pollutants into a publicly owned treatment works must comply with 40 CFR part 403, in addition to the limitations set forth in paragraphs (a) and (b) of this section.

(a) The following pretreatment standard establishes the quantity or quality of pollutants or pollutant properties, controlled by this section, which may be discharged to a publicly owned treatment works by a new point source subject to the provisions of this subpart:

Pollutant or pollutant property	Pretreatment standard
pH	No limitation.
TSS	Do.
Oil and grease	100 mg/l daily maximum.

(b) The following pretreatment standard establishes the quantity or quality or pollutant properties controlled by this section and attributable to pan, dry digestion, and mechanical reclaimed rubber processes which are integrated with a wet digestion reclaimed rubber process, which may be discharged to a publicly owned treatment works by a new point source subject to the provisions of this subpart, in addition to the limitations set forth by § 428.96(a):

Pollutant or pollutant property	Pretreatment standards	
	Maximum for any 1 day	Average of daily values for 30 consecutive days shall not exceed—
	Metric units (kg/kkg of product)	
COD	6.7	2.8
	English units (lb/1,000 lb of product)	
COD	6.7	2.8

[40 FR 2342, Jan. 10, 1975, as amended at 60 FR 33964, June 29, 1995]

Subpart J—Latex-Dipped, Latex-Extruded, and Latex-Molded Rubber Subcategory

SOURCE: 40 FR 2344, Jan. 10, 1975, unless otherwise noted.

§ 428.100 Applicability; description of the latex-dipped, latex-extruded, and latex-molded rubber subcategory.

The provisions of this subpart are applicable to process waste water discharges resulting from the manufacture of latex-dipped, latex-extruded, and latex-molded products with the exception of those discharges from textile plants subject to the provisions of part 410 of this chapter.

§ 428.101 Specialized definitions.

For the purpose of this subpart:

(a) Except as provided below, the general definitions, abbreviations and methods of analysis set forth in part 401 of this chapter shall apply to this subpart.

(b) The term ''chromium'' shall mean total chromium.

(c) The term ''raw material'' shall mean all latex solids used in the manufacture of latex-dipped, latex-extruded, and latex-molded products.

§ 428.102 Effluent limitations guidelines representing the degree of effluent reduction attainable by the application of the best practicable control technology currently available.

Except as provided in §§ 125.30 through 125.32, any existing point source subject to this subpart shall

achieve the following effluent limitations representing the degree of effluent reduction attainable by the application of the best practicable control technology currently available (BPT):

(a) The following limitations establish the quantity or quality of pollutants or pollutant properties, controlled by this section, which may be discharged by a point source subject to the provisions of this subpart after application of the best practicable control technology currently available:

Effluent characteristic	Effluent limitations	
	Maximum for any 1 day	Average of daily values for 30 consecutive days shall not exceed—
	Metric units (kg/kkg of raw material)	
Oil and grease	2.0	0.73
BOD5	3.72	2.20
TSS	6.96	2.90
pH	(1)	(1)
	English units (lb/1,000 lb of raw material)	
Oil and grease	2.0	0.73
BOD5	3.72	2.20
TSS	6.96	2.90
pH	(1)	(1)

[1] Within the range 6.0 to 9.0.

(b) The following limitations establish the quantity or quality of pollutants or pollutant properties, controlled by this section, and attributable to plants employing the chromic acid form-cleaning operation, by a point source subject to the provisions of this subpart after application of the best practicable control technology currently available, in addition to the limitations set forth by § 428.102(a):

Effluent characteristic	Effluent limitations	
	Maximum for any 1 day	Average of daily values for 30 consecutive days shall not exceed—
	Metric units (kg/kkg of raw material)	
Chromium	0.0086	0.0036
	English units (lb/1,000 lb of raw material)	
Chromium	0.0086	0.0036

[40 FR 2344, Jan. 10, 1975, as amended at 60 FR 33964, June 29, 1995]

§ 428.103 Effluent limitations guidelines representing the degree of effluent reduction attainable by the application of the best available technology economically achievable.

(a) The following limitations establish the quantity or quality of pollutants or pollutant properties, controlled by this section, which may be discharged by a point source subject to the provisions of this subpart after application of the best available technology economically achievable:

Effluent characteristic	Effluent limitations	
	Maximum for any 1 day	Average of daily values for 30 consecutive days shall not exceed—
	Metric units (kg/kkg of raw material)	
Oil and grease	2.0	0.73
BOD5	3.72	2.20
TSS	6.96	2.90
pH	(1)	(1)
	English units (lb/1,000 lb of raw material)	
Oil and grease	2.0	0.73
BOD5	3.72	2.20
TSS	6.96	2.90
pH	(1)	(1)

[1] Within the range 6.0 to 9.0.

(b) The following limitations establish the quantity or quality of pollutants or pollutant properties, controlled by this section and attributable to plants employing the chromic acid

form-cleaning operation, by a point source subject to the provisions of this subpart after application of the best available technology economically achievable, in addition to the limitations set forth by § 428.103(a):

Effluent characteristic	Effluent limitations	
	Maximum for any 1 day	Average of daily values for 30 consecutive days shall not exceed—
	Metric units (kg/kkg of raw material)	
Chromium	0.0086	0.0036
	English units (lb/1,000 lb of raw material)	
Chromium	0.0086	0.0036

§ 428.104 [Reserved]

§ 428.105 Standards of performance for new sources.

(a) The following standards of performance establish the quantity or quality of pollutants or pollutant properties, controlled by this section, which may be discharged by a new source subject to the provisions of this subpart:

Effluent characteristic	Effluent limitations	
	Maximum for any 1 day	Average of daily values for 30 consecutive days shall not exceed—
	Metric units (kg/kkg of raw material)	
Oil and grease	2.0	0.73
BOD5	3.72	2.20
TSS	6.96	2.90
pH	(1)	(1)
	English units (lb/1,000 lb of raw material)	
Oil and grease	2.0	0.73
BOD5	3.72	2.20
TSS	6.96	2.90
pH	(1)	(1)

[1] Within the range 6.0 to 9.0.

(b) The following standards of performance establish the quantity or quality of pollutants or pollutant properties, controlled by this section, and attributable to plants employing the chromic acid form-cleaning operation, which may be discharged by a new source subject to the provisions of this subpart, in addition to the limitations set forth by § 428.102(a):

Effluent characteristic	Effluent limitations	
	Maximum for any 1 day	Average of daily values for 30 consecutive days shall not exceed—
	Metric units (kg/kkg of raw material)	
Chromium	0.0086	0.0036
	English units (lb/1,000 lb of raw material)	
Chromium	0.0086	0.0036

§ 428.106 Pretreatment standards for new sources.

Any new source subject to this subpart that introduces process wastewater pollutants into a publicly owned treatment works must comply with 40 CFR part 403, in addition to the limitations set forth in paragraphs (a) and (b) of this section.

(a) The following pretreatment standard establishes the quantity or quality of pollutants or pollutant properties, controlled by this section, which may be discharged to a publicly owned treatment works by a new point source subject to the provisions of this subpart:

Pollutant or pollutant property	Pretreatment standard
pH	No limitation.
BOD5	Do.
TSS	Do.
Oil and grease	100 mg/l daily maximum.

(b) The following pretreatment standard establishes the quantity or quality of pollutant properties controlled by this section and attributable to plants employing the chromic acid form-cleaning operation, which may be discharged to a publicly owned treatment works by a new point source subject to the provisions of this subpart, in addition to the limitations set forth by § 428.106(a):

Pollutant or pollutant property	Pretreatment standards	
	Maximum for any 1 day	Average of daily values for 30 consecutive days shall not exceed—
	Metric units (kg/kkg of raw material)	
Chromium	0.0086	0.0036
	English units (lb/1,000 lb of raw material)	
Chromium	0.0086	0.0036

[40 FR 2344, Jan. 10, 1975, as amended at 60 FR 33964, June 29, 1995]

Subpart K—Latex Foam Subcategory

SOURCE: 40 FR 2345, Jan. 10, 1975, unless otherwise noted.

§ 428.110 Applicability; description of the latex foam subcategory.

The provisions of this subpart are applicable to process waste water discharges resulting from the manufacture of latex foam except for those discharges from textile plants subject to the provisions of part 410 of this chapter.

§ 428.111 Specialized definitions.

For the purpose of this subpart:

(a) Except as provided below, the general definitions, abbreviations and methods of analysis set forth in part 401 of this chapter shall apply to this subpart.

(b) The term ''raw material'' shall mean all latex solids used in the manufacture of latex foam.

§ 428.112 Effluent limitations guidelines representing the degree of effluent reduction attainable by the application of the best practicable control technology currently available.

Except as provided in §§ 125.30 through 125.32, any existing point source subject to this subpart shall achieve the following effluent limitations representing the degree of effluent reduction attainable by the application of the best practicable control technology currently available (BPT):

Effluent characteristic	Effluent limitations	
	Maximum for any 1 day	Average of daily values for 30 consecutive days shall not exceed—
	Metric units (kg/kkg of raw material)	
Zinc	0.058	0.024
BOD5	2.4	1.4
TSS	2.26	0.94
pH	(1)	(1)
	English units (lb/1,000 lb of raw material)	
Zinc	0.058	0.024
BOD5	2.4	1.4
TSS	2.26	0.94
pH	(1)	(1)

[1] Within the range 6.0 to 9.0.

[40 FR 2345, Jan. 10, 1975, as amended at 60 FR 33964, June 29, 1995]

§ 428.113 Effluent limitations guidelines representing the degree of effluent reduction attainable by the application of the best available technology economically achievable.

The following limitations establish the quantity or quality of pollutants or pollutant properties, controlled by this section, which may be discharged by a point source subject to the provisions of this subpart after application of the best available technology economically achievable:

Effluent characteristic	Effluent limitations	
	Maximum for any 1 day	Average of daily values for 30 consecutive days shall not exceed—
	Metric units (kg/kkg of raw material)	
Zinc	0.058	0.024
BOD5	2.4	1.4
TSS	2.26	0.94
pH	(1)	(1)
	English units (lb/1,000 lb of raw material)	
Zinc	0.058	0.024
BOD5	2.4	1.4
TSS	2.26	0.94
pH	(1)	(1)

[1] Within the range 6.0 to 9.0.

§ 428.114 [Reserved]

§ 428.115 Standards of performance for new sources.

The following standards of performance establish the quantity or quality of pollutants or pollutant properties, controlled by this section, which may be discharged by a new source subject to the provisions of this subpart:

Effluent characteristic	Effluent limitations	
	Maximum for any 1 day	Average of daily values for 30 consecutive days shall not exceed—
	Metric units (kg/kkg of raw material)	
Zinc	0.058	0.024
BOD5	2.4	1.4
TSS	2.26	0.94
pH	(1)	(1)
	English units (lb/1,000 lb of raw material)	
Zinc	0.058	0.024
BOD5	2.4	1.4
TSS	2.26	0.94
pH	(1)	(1)

[1] Within the range 6.0 to 9.0.

§ 428.116 Pretreatment standards for new sources.

Any new source subject to this subpart that introduces process wastewater pollutants into a publicly owned treatment works must comply with 40 CFR part 403. In addition, the following pretreatment standard establishes the quantity or quality of pollutants or pollutant properties, controlled by this section, which may be discharged to a publicly owned treatment works by a new point source subject to the provisions of this subpart:

Pollutant or pollutant property	Pretreatment standards	
	Maximum for any 1 day	Average of daily values for 30 consecutive days shall not exceed—
	Metric units (kg/kkg of raw material)	
Zinc	0.058	0.024
BOD5	(1)	(1)
TSS	(1)	(1)
pH	(1)	(1)
	English units (lb/1,000 lb of raw material)	
Zinc	0.058	0.024
BOD5	(1)	(1)
TSS	(1)	(1)
pH	(1)	(1)

[1] No limitation.

[40 FR 2345, Jan. 10, 1975, as amended at 60 FR 33964, June 29, 1995]

PART 429—TIMBER PRODUCTS PROCESSING POINT SOURCE CATEGORY

GENERAL PROVISIONS

Sec.
429.10 Applicability.
429.11 General definitions.
429.12 Monitoring requirements. [Reserved]

Subpart A—Barking Subcategory

429.20 Applicability; description of the barking subcategory.
429.21 Effluent limitations representing the degree of effluent reduction attainable by the application of the best practicable control technology currently available (BPT).
429.22 Effluent limitations representing the degree of effluent reduction attainable by the application of the best conventional pollutant control technology (BCT). [Reserved]
429.23 Effluent limitations representing the degree of effluent reduction attainable by the application of the best available technology economically achievable (BAT). [Reserved]
429.24 New source performance standards (NSPS).
429.25 Pretreatment standards for existing sources (PSES).
429.26 Pretreatment standards for new sources (PSNS).

Subpart B—Veneer Subcategory

429.30 Applicability; description of the veneer subcategory.

429.31 Effluent limitations representing the degree of effluent reduction attainable by the application of the best practicable control technology currently available (BPT).
429.32 Effluent limitations representing the degree of effluent reduction attainable by the application of the best conventional pollutant control technology (BCT). [Reserved]
429.33 Effluent limitations representing the degree of effluent reduction attainable by the application of the best available technology economically achievable (BAT).
429.34 New source performance standards (NSPS).
429.35 Pretreatment standards for existing sources (PSES).
429.36 Pretreatment standards for new sources (PSNS).

Subpart C—Plywood Subcategory

429.40 Applicability; description of the plywood subcategory.
429.41 Effluent limitations representing the degree of effluent reduction attainable by the application of the best practicable control technology currently available (BPT).
429.42 Effluent limitations representing the degree of effluent reduction attainable by the application of the best conventional pollutant control technology (BCT). [Reserved]
429.43 Effluent limitations representing the degree of effluent reduction attainable by the application of the best available technology economically achievable (BAT).
429.44 New source performance standards (NSPS).
429.45 Pretreatment standards for existing sources (PSES).
429.46 Pretreatment standards for new sources (PSNS).

Subpart D—Dry Process Hardboard Subcategory

429.50 Applicability; description of the dry process hardboard subcategory.
429.51 Effluent limitations representing the degree of effluent reduction attainable by the application of the best practicable control technology currently available (BPT).
429.52 Effluent limitations representing the degree of effluent reduction attainable by the application of the best conventional pollutant control technology (BCT). [Reserved]
429.53 Effluent limitations representing the degree of effluent reduction attainable by the application of the best available technology economically achievable (BAT).
429.54 New source performance standards (NSPS).
429.55 Pretreatment standards for existing sources (PSES).
429.56 Pretreatment standards for new sources (PSNS).

Subpart E—Wet Process Hardboard Subcategory

429.60 Applicability; description of the wet process hardboard subcategory.
429.61 Effluent limitations representing the degree of effluent reduction attainable by the application of the best practicable control technology currently available (BPT).
429.62 [Reserved]
429.63 Effluent limitations representing the degree of effluent reduction attainable by the application of the best available technology economically achievable (BAT). [Reserved]
429.64 New source performance standards (NSPS).
429.65 Pretreatment standards for existing sources (PSES).
429.66 Pretreatment standards for new sources (PSNS).

Subpart F—Wood Preserving—Water Borne or Nonpressure Subcategory

429.70 Applicability; description of the wood preserving—water borne or nonpressure subcategory.
429.71 Effluent limitations representing the degree of effluent reduction attainable by the application of the best practicable control technology currently available (BPT).
429.72 Effluent limitations representing the degree of effluent reduction attainable by the application of the best conventional pollutant control technology (BCT). [Reserved]
429.73 Effluent limitations representing the degree of effluent reduction attainable by the application of the best available technology economically achievable (BAT).
429.74 New source performance standards (NSPS).
429.75 Pretreatment standards for existing sources (PSES).
429.76 Pretreatment standards for new sources (PSNS).

Subpart G—Wood Preserving—Steam Subcategory

429.80 Applicability; description of the wood preserving—steam subcategory.
429.81 Effluent limitations representing the degree of effluent reduction attainable

by the application of the best practicable control technology currently available (BPT).
429.82 Effluent limitations representing the degree of effluent reduction attainable by the application of the best conventional pollutant control technology (BCT). [Reserved]
429.83 Effluent limitations representing the degree of effluent reduction attainable by the application of the best available technology economically achievable (BAT). [Reserved]
429.84 New source performance standards (NSPS).
249.85 Pretreatment standards for existing sources (PSES).
429.86 Pretreatment standards for new sources (PSNS).

Subpart H—Wood Preserving—Boulton Subcategory

429.90 Applicability; description of the wood preserving—Boulton subcategory.
429.91 Effluent limitations representing the degree of effluent reduction attainable by the application of the best practicable control technology currently available (BPT).
429.92 Effluent limitations representing the degree of effluent reduction attainable by the application of the best conventional pollutant control technology (BCT). [Reserved]
429.93 Effluent limitations representing the degree of effluent reduction attainable by the application of the best available technology economically achievable (BAT).
429.94 New source performance standards (NSPS).
429.95 Pretreatment standards for existing sources (PSES).
429.96 Pretreatment standards for new sources (PSNS).

Subpart I—Wet Storage Subcategory

429.100 Applicability; description of the wet storage subcategory.
429.101 Effluent limitations representing the degree of effluent reduction attainable by the application of the best practicable control technology currently available (BPT).
429.102 Effluent limitations representing the degree of effluent reduction attainable by the application of the best conventional pollutant control technology (BCT). [Reserved]
429.103 Effluent limitations representing the degree of effluent reduction attainable by the application of the best available technology economically achievable (BAT).
429.104 New source performance standards (NSPS).
429.105 Pretreatment standards for existing sources (PSES).
429.106 Pretreatment standards for new sources (PSNS).

Subpart J—Log Washing Subcategory

429.110 Applicability; description of the log washing subcategory.
429.111 Effluent limitations representing the degree of effluent reduction attainable by the application of the best practicable control technology currently available (BPT).
429.112 Effluent limitations representing the degree of effluent reduction attainable by the application of the best conventional pollutant control technology (BCT). [Reserved]
429.113 Effluent limitations representing the degree of effluent reduction attainable by the application of the best available technology economically achievable (BAT).
429.114 New source performance standards (NSPS).
429.115 Pretreatment standards for existing sources (PSES).
429.116 Pretreatment standards for new sources (PSNS).

Subpart K—Sawmills and Planing Mills Subcategory

429.120 Applicability; description of the sawmills and planing mills subcategory.
429.121 Effluent limitations representing the degree of effluent reduction attainable by the application of the best practicable control technology currently available (BPT).
429.122 Effluent limitations representing the degree of effluent reduction attainable by the application of the best conventional pollutant control technology (BCT). [Reserved]
429.123 Effluent limitations representing the degree of effluent reduction attainable by the application of the best available technology economically achievable (BAT).
429.124 New source performance standards (NSPS).
429.125 Pretreatment standards for existing sources (PSES).
429.126 Pretreatment standards for new sources (PSNS).

Subpart L—Finishing Subcategory

429.130 Applicability; description of the finishing subcategory.

429.131 Effluent limitations representing the degree of effluent reduction attainable by the application of the best practicable control technology currently available (BPT).
429.132 Effluent limitations representing the degree of effluent reduction attainable by the application of the best conventional pollutant control technology (BCT). [Reserved]
429.133 Effluent limitations representing the degree of effluent reduction attainable by the application of the best available technology economically achievable (BAT).
429.134 New source performance standards (NSPS).
429.135 Pretreatment standards for existing sources (PSES).
429.136 Pretreatment standards for new sources (PSNS).

Subpart M—Particleboard Manufacturing Subcategory

429.140 Applicability; description of the particleboard manufacturing subcategory.
419.141 Effluent limitations representing the degree of effluent reduction attainable by the application of the best practicable control technology currently available (BPT).
429.142 Effluent limitations representing the degree of effluent reduction attainable by the application of the best conventional pollutant control technology (BCT). [Reserved]
429.143 Effluent limitations representing the degree of effluent reduction attainable by the application of the best available technology economically achievable (BAT).
429.144 New source performance standards (NSPS).
429.145 Pretreatment standards for existing sources (PSES).
429.146 Pretreatment standards for new sources (PSNS).

Subpart N—Insulation Board Subcategory

429.150 Applicability; description of the insulation board subcategory.
429.151 Effluent limitations representing the degree of effluent reduction attainable by the application of the best practicable control technology currently available (BPT).
429.152 [Reserved]
429.153 Effluent limitations representing the degree of effluent reduction attainable by the application of the best available technology economically achievable (BAT). [Reserved]
429.154 New source performance standards (NSPS).
429.155 Pretreatment standards for existing sources (PSES).
429.156 Pretreatment standards for new sources (PSNS).

Subpart O—Wood Furniture and Fixture Production Without Water Wash Spray Booth(s) or Without Laundry Facilities Subcategory

429.160 Applicability; description of the wood furniture and fixture production without water wash spray booth(s) or without laundry facilities subcategory.
429.161 Effluent limitations representing the degree of effluent reduction attainable by the application of the best practicable control technology currently available (BPT).
429.162 Effluent limitations representing the degree of effluent reduction attainable by the application of the best conventional pollutant control technology (BCT). [Reserved]
429.163 Effluent limitations representing the degree of effluent reduction attainable by the application of the best available technology economically achievable (BAT).
429.164 New source performance standards (NSPS).
429.165 Pretreatment standards for existing sources (PSES).
429.166 Pretreatment standards for new sources (PSNS).

Subpart P—Wood Furniture and Fixture Production With Water Wash Spray Booth(s) or With Laundry Facilities Subcategory

429.170 Applicability; description of the wood furniture and fixture production with water wash spray booth(s) or with laundry facilities subcategory.
429.171 Effluent limitations representing the degree of effluent reduction attainable by the application of the best practicable control technology currently available (BPT).
429.172 Effluent limitations representing the degree of effluent reduction attainable by the application of the best conventional pollutant control technology (BCT). [Reserved]
429.173 Effluent limitations representing the degree of effluent reduction attainable by the application of the best available technology economically achievable (BAT).
429.174 New source performance standards (NSPS).
429.175 Pretreatment standards for existing sources (PSES).
429.176 Pretreatment standards for new sources (PSNS).

AUTHORITY: Secs. 301, 304(b), (c), (e), and (g), 306(b) and (c), 307(a)(b) and (c) and 501 of the Clean Water Act (the Federal Water Pollution Control Act Amendments of 1972, as amended by the Clean Water Act of 1977) (the ''Act''); 33 U.S.C. 1311, 1314(b), (c), (e), and (g), 1316(b) and (c), 1317(b) and (c), and 1361; 86 Stat. 815, Pub. L. 92–500; 91 Stat. 1567, Pub. L. 95–217.

SOURCE: 46 FR 8285, Jan. 26, 1981, unless otherwise noted.

GENERAL PROVISIONS

§ 429.10 Applicability.

This part applies to any timber products processing operation, and any plant producing insulation board with wood as the major raw material, which discharges or may discharge process wastewater pollutants to the waters of the United States, or which introduces or may introduce process wastewater pollutants into a publicly owned treatment works.

§ 429.11 General definitions.

In addition to the definitions set forth in 40 CFR part 401, the following definitions apply to this part:

(a) The term ''hydraulic barking'' means a wood processing operation that removes bark from wood by the use of water under a pressure of 6.8 atm (100 psia) or greater.

(b) The terms ''cubic feet'' or ''cubic meters'' of production in subpart A means the cubic feet or cubic meters of logs from which bark is removed.

(c) The term ''process wastewater'' specifically excludes noncontact cooling water, material storage yard runoff (either raw material or processed wood storage), and boiler blowdown. For the dry process hardboard, veneer, finishing, particleboard, and sawmills and planing mills subcategories, fire control water is excluded from the definition.

(d) The term ''gross production of fiberboard products'' means the air dry weight of hardboard or insulation board following formation of the mat and prior to trimming and finishing operations.

(e) The term ''hardboard'' means a panel manufactured from interfelted ligno-cellulosic fibers consolidated under heat and pressure to a density of 0.5 g/cu cm (31 lb/cu ft) or greater.

(f) The term ''insulation board'' means a panel manufactured from interfelted ligno-cellulosic fibers consolidated to a density of less than 0.5 g/cu cm (less than 31 lb/cu ft).

(g) The term ''smooth-one-side (S1S) hardboard'' means hardboard which is produced by the wet-matting, wet-pressing process.

(h) The term ''smooth-two-sides (S2S) hardboard'' means hardboard which is produced by the wet-matting, dry-pressing process.

(i) The term ''debris'' means woody material such as bark, twigs, branches, heartwood or sapwood that will not pass through a 2.54 cm (1.0 in) diameter round opening and is present in the discharge from a wet storage facility.

(j) For the subcategories for which numerical limitations are given, the daily maximum limitation is a value that should not be exceeded by any one effluent measurement. The 30-day limitation is a value that should not be exceeded by the average of daily measurements taken during any 30-day period.

[46 FR 8285, Jan. 26, 1981, as amended at 46 FR 57287, Nov. 23, 1981]

§ 429.12 Monitoring requirements. [Reserved]

Subpart A—Barking Subcategory

§ 429.20 Applicability; description of the barking subcategory.

This subpart applies to discharges to waters of the United States and to the introduction of process wastewater pollutants into publicly owned treatment works from the barking of logs by plants in SIC major group 24, and by plants producing insulation board (SIC group 2661).

§ 429.21 Effluent limitations representing the degree of effluent reduction attainable by the application of the best practicable control technology currently available (BPT).

Except as provided in 40 CFR 125.30 through 125.32, any existing point source subject to this subpart must

achieve the following effluent limitations representing the degree of effluent reduction attainable by the application of the best practicable control technology currently available (BPT):

(a) The following limitations apply to all mechanical barking installations: There shall be no discharge of process wastewater pollutants into navigable waters.

(b) The following limitations constitute the maximum permissible discharge for hydraulic barking installations:

SUBPART A

Pollutant or pollutant property	BPT effluent limitations	
	Maximum for any 1 day	Average of daily values for 30 consecutive days
	Metric units (kilograms per cubic meter of production)	
BOD5	1.5	0.5
TSS	6.9	2.3
pH	(1)	(1)
	English units (pounds per cubic foot of production)	
BOD5	0.09	0.03
TSS	0.431	0.144
pH	(1)	(1)

[1] Within the range 6.0 to 9.0 at all times.

§ 429.22 Effluent limitations representing the degree of effluent reduction attainable by the application of the best conventional pollutant control technology (BCT). [Reserved]

§ 429.23 Effluent limitations representing the degree of effluent reduction attainable by the application of the best available technology economically achievable (BAT). [Reserved]

§ 429.24 New source peformance standards (NSPS).

Any new source subject to this subpart must achieve the following new source performance standards (NSPS):

(a) The following limitations apply to all mechanical barking installations: There shall be no discharge of process wastewater pollutants into navigable waters.

(b) The following limitations constitute the maximum permissible discharge for hydraulic barking installations:

SUBPART A

Pollutant or pollutant property	NSPS effluent limitations	
	Maximum for any 1 day	Average of daily values for 30 consecutive days
	Metric units (kilograms per cubic meter of production)	
BOD5	1.5	0.5
TSS	6.9	2.3
pH	(1)	(1)
	English units (pounds per cubic foot of production)	
BOD5	0.09	0.03
TSS	0.431	0.144
pH	(1)	(1)

[1] Within the range 6.0 to 9.0 at all times.

§ 429.25 Pretreatment standards for existing sources (PSES).

Any existing source subject to this subpart which introduces process wastewater pollutants into a publicly owned treatment works must comply with 40 CFR part 403.

§ 429.26 Pretreatment standards for new sources (PSNS).

Any new source subject to this subpart which introduces process wastewater pollutants into a publicly owned treatment works must comply with 40 CFR part 403.

Subpart B—Veneer Subcategory

§ 429.30 Applicability; description of the veneer subcategory.

This subpart applies to discharges to waters of the United States and to the introduction of process wastewater pollutants into publicly owned treatment works from any plant which manufactures veneer and does not store or hold raw materials in wet storage conditions.

§ 429.31 Effluent limitations representing the degree of effluent reduction attainable by the application of the best practicable control technology currently available (BPT).

Except as provided in 40 CFR 125.30 through 125.32, any existing point source subject to this subpart must achieve the following effluent limitations representing the degree of effluent reduction attainable by application of the best practicable control technology currently available (BPT):

(a) The following limitations constitute the maximum permissible discharge for all veneer manufacturing installations other than those referred to in paragraphs (b) and (c) of this section: There shall be no discharge of process wastewater pollutants into navigable waters.

(b) The following limitations constitute the maximum permissible discharge for softwood veneer manufacturing processes which use direct steaming for the conditioning of logs:

SUBPART B

Pollutant or pollutant property	BPT effluent limitations	
	Maximum for any 1 day	Average of daily values for 30 consecutive days shall not exceed
	Metric units (kilograms per cubic meter of production)	
BOD5	0.72	0.24
pH	(1)	(1)
	English units (pounds per cubic foot of production)	
BOD5	0.045	0.015
pH	(1)	(1)

[1] Within the range 6.0 to 9.0 at all times.

(c) The following limitations constitute the maximum permissible discharge for hardwood veneer manufacturing processes which use direct steaming for the conditioning of logs:

SUBPART B

Pollutant or pollutant property	BPT effluent limitations	
	Maximum for any 1 day	Average of daily values for 30 consecutive days shall not exceed
	Metric units (kilograms per cubic meter of production)	
BOD5	1.62	0.54
pH	(1)	(1)
	English units (pounds per cubic foot of production)	
BOD5	0.10	0.034
pH	(1)	(1)

[1] Within the range 6.0 to 9.0 at all times.

§ 429.32 Effluent limitations representing the degree of effluent reduction attainable by the application of the best conventional pollutant control technology (BCT). [Reserved]

§ 429.33 Effluent limitations representing the degree of effluent reduction attainable by the application of the best available technology economically achievable (BAT).

Except as provided in 40 CFR 125.30 through 125.32, any existing point source subject to this subpart must achieve the following effluent limitations representing the degree of effluent reduction attainable by the application of best available technology economically achievable (BAT): There shall be no discharge of process wastewater pollutants into navigable waters.

§ 429.34 New source performance standards (NSPS).

Any new source subject to this subpart must achieve the following new source performance standards (NSPS): There shall be no discharge of process wastewater pollutants into navigable waters.

§ 429.35 Pretreatment standards for existing sources (PSES).

Any existing source subject to this subpart which introduces process wastewater pollutants into a publicly owned treatment works must comply with 40 CFR part 403.

§ 429.36 Pretreatment standards for new sources (PSNS).

Any new source subject to this subpart which introduces process wastewater pollutants into a publicly owned treatment works must comply with 40 CFR part 403.

Subpart C—Plywood Subcategory

§ 429.40 Applicability; description of the plywood subcategory.

This subpart applies to discharges to waters of the United States and to the introduction of process wastewater pollutants into publicly owned treatment works from any plywood producing plant that does not store or hold raw materials in wet storage conditions.

§ 429.41 Effluent limitations representing the degree of effluent reduction attainable by the application of the best practicable control technology currently available (BPT).

Except as provided in 40 CFR 125.30 through 125.32, any existing point source subject to this subpart must achieve the following effluent limitations representing the degree of effluent reduction attainable by the application of the best practicable control technology (BPT): There shall be no discharge of process wastewater pollutants into navigable waters.

§ 429.42 Effluent limitations representing the degree of effluent reduction attainable by the application of the best conventional pollutant control technology (BCT). [Reserved]

§ 429.43 Effluent limitations representing the degree of effluent reduction attainable by the application of the best available technology economically achievable (BAT).

Except as provided in 40 CFR 125.30 through 125.32, any existing point source subject to this subpart must achieve the following effluent limitations representing the degree of effluent reduction attainable by the application of the best available technology economically achievable (BAT): There shall be no discharge of process wastewater pollutants into navigable waters.

§ 429.44 New source performance standards (NSPS).

Any new source subject to this subpart must achieve the following new source performance standards (NSPS): There shall be no discharge of process wastewater pollutants into navigable waters.

§ 429.45 Pretreatment standards for existing sources (PSES).

Any existing source subject to this subpart which introduces process wastewater pollutants into a publicly owned treatment works must comply with 40 CFR part 403.

§ 429.46 Pretreatment standards for new sources (PSNS).

Any new source subject to this subpart which introduces process wastewater pollutants into a publicly owned treatment works must comply with 40 CFR part 403.

Subpart D—Dry Process Hardboard Subcategory

§ 429.50 Applicability; description of the dry process hardboard subcategory.

This subpart applies to discharges to waters of the United States and to the introduction of process wastewater pollutants into publicly owned treatment works from any plant that produces hardboard using the dry matting process for forming the board mat.

§ 429.51 Effluent limitations representing the degree of effluent reduction attainable by the application of the best practicable control technology currently available (BPT).

Except as provided in 40 CFR 125.30 through 125.32, any existing point source subject to this subpart must achieve the following effluent limitations representing the degree of effluent reduction attainable by the application of the best practicable control technology (BPT): There shall be no discharge of process wastewater pollutants into navigable waters.

§ 429.52 Effluent limitations representing the degree of effluent reduction attainable by the application of the best conventional pollutant control technology (BCT). [Reserved]

§ 429.53 Effluent limitations representing the degree of effluent reduction attainable by the application of the best available technology economically achievable (BAT).

Except as provided in 40 CFR 125.30 through 125.32, any existing point source subject to this subpart must achieve the following effluent limitations representing the degree of effluent reduction attainable by the application of the best available technology economically achievable (BAT): There shall be no discharge of process wastewater pollutants into navigable waters.

§ 429.54 New source performance standards (NSPS).

Any new source subject to this subpart must achieve the following new source performance standards (NSPS): There shall be no discharge of process wastewater pollutants into navigable waters.

§ 429.55 Pretreatment standards for existing sources (PSES).

Any existing source subject to this subpart which introduces process wastewater pollutants into a publicly owned treatment works must comply with 40 CFR part 403.

§ 429.56 Pretreatment standards for new sources (PSNS).

Any new source subject to this subpart which introduces process wastewater pollutants into a publicly owned treatment works must comply with 40 CFR part 403.

Subpart E—Wet Process Hardboard Subcategory

§ 429.60 Applicability; description of the wet process hardboard subcategory.

This subpart applies to discharges to waters of the United States and to the introduction of process wastewater pollutants into publicly owned treatment works from any plant which produces hardboard products using the wet matting process for forming the board mat.

§ 429.61 Effluent limitations representing the degree of effluent reduction attainable by the application of the best practicable control technology currently available (BPT).

Except as provided in 40 CFR 125.30 through 125.32, any existing point source subject to this subpart must achieve the following effluent limitations representing the degree of effluent reduction attainable by the application of the best practicable control technology currently available (BPT):

(a) The following limitations apply to plants which produce smooth-one-side (S1S) hardboard:

SUBPART E (S1S)

Pollutant or pollutant property	BPT Effluent Limitations	
	Maximum for any 1 day	Average of daily values for 30 consecutive days
	kg/kkg (lb/1000 lb) of gross production	
BOD5	20.5	10.7
TSS	37.3	24.6
pH	(1)	(1)

[1] Within the range 6.0 to 9.0 at all times.

(b) The following limitations apply to plants which produce smooth-two-sides (S2S) hardboard:

SUBPART E (S2S)

Pollutant or pollutant property	BPT Effluent Limitations	
	Maximum for any 1 day	Average of daily values for 30 consecutive days
	kg/(kkg (lb/1000 lb) of gross production	
BOD5	32.9	21.4
TSS	54.2	37.1
pH	(1)	(1)

[1] Within the range 6.0 to 9.0 at all times.

[46 FR 8285, Jan. 26, 1981, as amended at 46 FR 11972, Feb. 12, 1981]

§ 429.62 [Reserved]

§ 429.63 Effluent limitations representing the degree of effluent reduction attainable by the application of the best available technology economically achievable (BAT). [Reserved]

§ 429.64 New source performance standards (NSPS).

For purpose of this new source performance standard only, ''new source'' means a source which is constructed at a site at which no other source covered by this part is located. Any new source subject to this subpart must achieve the following new source performance standards (NSPS): There shall be no discharge of process wastewater pollutants into navigable waters.

[46 FR 8285, Jan. 26, 1981, as amended at 46 FR 57287, Nov. 23, 1981]

§ 429.65 Pretreatment standards for existing sources (PSES).

Any existing source subject to this subpart which introduces process wastewater pollutants into a publicly owned treatment works must comply with 40 CFR part 403.

§ 429.66 Pretreatment standards for new sources (PSNS).

Any new source subject to this subpart which introduces process wastewater pollutants into a publicly owned treatment works must comply with 40 CFR part 403.

Subpart F—Wood Preserving—Water Borne or Nonpressure Subcategory

§ 429.70 Applicability; description of the wood preserving–water borne or nonpressure subcategory.

This subpart applies to discharges and to the introduction of process wastewater pollutants into publicly owned treatment works from all nonpressure wood preserving treatment processes and all pressure wood preserving treatment processes employing water borne inorganic salts.

§ 429.71 Effluent limitations representing the degree of effluent reduction attainable by the application of the best practicable control technology currently available (BPT).

Except as provided in 40 CFR 125.30 through 125.32, any existing point source subject to this subpart must achieve the following effluent limitations representing the degree of reduction attainable by the application of the best practicable control technology (BPT): There shall be no discharge of process wastewater pollutants into navigable waters.

§ 429.72 Effluent limitations representing the degree of effluent reduction attainable by the application of the best conventional pollutant control technology (BCT). [Reserved]

§ 429.73 Effluent limitations representing the degree of effluent reduction attainable by the application of the best available technology economically achievable (BAT).

Except as provided in 40 CFR 125.30 through 125.32, any existing point source subject to this subpart must achieve the following effluent limitations representing the degree of effluent reduction attainable by the application of the best available technology economically achievable (BAT): There shall be no discharge of process wastewater pollutants into navigable waters.

§ 429.74 New source performance standards (NSPS).

Any new source subject to this subpart must achieve the following new source performance standards (NSPS): There shall be no discharge of process wastewater pollutants into navigable waters.

§ 429.75 Pretreatment standards for existing sources (PSES).

Except as provided in 40 CFR 403.7 and 403.13, any existing source subject to this subpart which introduces process wastewater pollutants into a publicly owned treatment works must comply with 40 CFR part 403 and achieve the following pretreatment standards for existing sources (PSES):

There shall be no introduction of process wastewater pollutants into publicly owned treatment works.

§ 429.76 Pretreatment standards for new sources (PSNS).

Except as provided in 40 CFR 403.7, any new source subject to this subpart which introduces process wastewater pollutants into a publicly owned treatment works must comply with 40 CFR part 403 and achieve the following pretreatment standards for new sources (PSNS): There shall be no introduction of process wastewater pollutants into publicly owned treatment works.

Subpart G—Wood Preserving Steam Subcategory

§ 429.80 Applicability; description of the wood preserving—steam subcategory.

This subpart applies to discharges to waters of the United States and to the introduction of process wastewater pollutants into publicly owned treatment works from wood preserving processes that use direct steam impingment on wood as the predominant conditioning method; processes that use the vapor drying process as the predominant conditioning method; direct steam conditioning processes which use the same retort to treat with both salt and oil type preservatives; and steam conditioning processes which apply both salt type and oil type preservatives to the same stock.

§ 429.81 Effluent limitations representing the degree of effluent reduction attainable by the application of the best practicable control technology currently available (BPT).

Except as provided in 40 CFR 125.30 through 125.32, any existing point source subject to this subpart must achieve the following effluent limitations representing the degree of effluent reduction attainable by the application of the best practicable control technology currently available (BPT):

SUBPART G

Pollutant or pollutant property	BPT Effluent Limitations	
	Maximum for any 1 day	Average of daily values for 30 consecutive days
	English units (lb/1000 cubic feet of product)	
COD	68.5	34.5
Phenols	.14	.04
Oil and Grease	1.5	.75
pH	(1)	(1)
	Metric units (kg/1000 cu m of product)	
COD	1,100	550
Phenols	2.18	.65
Oil and Grease	24.0	12.0
pH	(1)	(1)

[1] Within the range of 6.0 to 9.0 at all times.

§ 429.82 Effluent limitations representing the degree of effluent reduction attainable by the application of the best conventional pollutant control technology (BCT). [Reserved]

§ 429.83 Effluent limitations representing the degree of effluent reduction attainable by the application of the best available technology economically achievable (BAT). [Reserved]

§ 429.84 New source performance standards (NSPS).

Any new source subject to this subpart must achieve the following new source performance standards (NSPS): There shall be no discharge of process wastewater pollutants into navigable waters.

§ 429.85 Pretreatment standards for existing sources (PSES).

Except as provided in 40 CFR 403.7 and 403.13, any existing source subject to this subpart which introduces process wastewater pollutants into a publicly owned treatment works must comply with 40 CFR part 403 and meet the following pretreatment standards for existing sources (PSES):

SUBPART G

[PSES Effluent Limitations]

Pollutant or pollutant property	Maximum for any 1 day (mg/l)
Oil and grease	100
Copper	5
Chromium	4
Arsenic	4

In cases where POTWs find it necessary to impose mass limitations, the following equivalent mass limitations are provided as guidance.

[Grams per cubic meter of production]

Pollutant or pollutant property	Maximum for any 1 day
Oil and grease	20.5
Copper	.62
Chromium	.41
Arsenic	.41

§ 429.86 Pretreatment standards for new sources (PSNS).

Except as provided in 40 CFR 403.7, any new source subject to this subpart which introduces process wastewater pollutants into a publicly owned treatment works must comply with 40 CFR part 403 and achieve the following pretreatment standards for new sources (PSNS): There shall be no introduction of process wastewater pollutants into publicly owned treatment works.

Subpart H—Wood Preserving—Boulton Subcategory

§ 429.90 Applicability; description of the wood preserving—Boulton subcategory.

This subpart applies to discharges to waters of the United States and to the introduction of process wastewater pollutants into a publicly owned treatment works from wood preserving operations which use the Boulton process as the predominant method of conditioning stock.

§ 429.91 Effluent limitations representing the degree of effluent reduction attainable by the application of the best practicable control technology currently available (BPT).

Except as provided in 40 CFR 125.30 through 125.32, any existing point source subject to this subpart must achieve the following effluent limitations representing the degree of effluent reduction attainable by the application of the best practicable control technology (BPT): There shall be no discharge of process wastewater pollutants into navigable waters.

§ 429.92 Effluent limitations representing the degree of effluent reduction attainable by the application of the best conventional pollutant control technology (BCT). [Reserved]

§ 429.93 Effluent limitations representing the degree of effluent reduction attainable by the application of the best available technology economically achievable (BAT).

Except as provided in 40 CFR 125.30 through 125.32, any existing point source subject to this subpart must achieve the following effluent limitations representing the degree of effluent reduction attainable by the application of the best available technology economically achievable (BAT): There shall be no discharge of process wastewater pollutants into navigable waters.

§ 429.94 New source performance standards (NSPS).

Any new source subject to this subpart must achieve the following new source performance standards (NSPS): There shall be no discharge of process wastewater pollutants into navigable waters.

§ 429.95 Pretreatment standards for existing sources (PSES).

Except as provided in 40 CFR 403.7 and 403.13, any existing source subject to this subpart which introduces process wastewater pollutants into a publicly owned treatment works must comply with 40 CFR part 403 and meet

the following pretreatment standards for existing sources (PSES):

SUBPART H

[PSES Effluent Limitations]

Pollutant or pollutant property	Maximum for any 1 day (mg/l)
Oil and grease	100
Copper	5
Chromium	4
Arsenic	4

In cases where POTWs find it necessary to impose mass limitations, the following equivalent mass limitations are provided as guidance.

SUBPART H

[PSES Effluent Limitations; grams per cu m of production]

Pollutant or pollutant property	Maximum for any 1 day
Oil and grease	20.5
Copper	.62
Chromium	.41
Arsenic	.41

§ 429.96 Pretreatment standards for new sources (PSNS).

Except as provided in 40 CFR 403.7, any new source subject to this subpart which introduces process wastewater pollutants into a publicly owned treatment works must comply with 40 CFR part 403 and achieve the following pretreatment standards for new sources (PSNS): There shall be no introduction of process wastewater pollutants into publicly owned treatment works.

Subpart I—Wet Storage Subcategory

§ 429.100 Applicability; description of the wet storage subcategory.

This subpart applies to discharges to waters of the United States and to the introduction of process wastewater pollutants into publicly owned treatment works from the storage of unprocessed wood, i.e., the storage of logs or roundwood before or after removal of bark in self-contained bodies of water (mill ponds or log ponds) or the storage of logs or roundwood on land during which water is sprayed or deposited intentionally on the logs (wet decking).

§ 429.101 Effluent limitations representing the degree of effluent reduction attainable by the application of the best practicable control technology currently available (BPT).

Except as provided in 40 CFR 125.30 through 125.32, any existing point source subject to this subpart must achieve the following effluent reduction attainable by the application of the best practicable control technology currently available (BPT): There shall be no debris discharged and the pH shall be within the range of 6.0 to 9.0

§ 429.102 Effluent limitations representing the degree of effluent reduction attainable by the application of the best conventional pollutant control technology (BCT). [Reserved]

§ 429.103 Effluent limitations representing the degree of effluent reduction attainable by the application of the best available technology economically achievable (BAT).

Except as provided in 40 CFR 125.30 through 125.32, any existing point source subject to this subpart must achieve the following effluent limitations representing the degree of effluent reduction attainable by the application of the best available technology economically achievable (BAT): There shall be no debris discharged and the pH shall be within the range of 6.0 to 9.0.

§ 429.104 New source performance standards (NSPS).

Any new source subject to this subpart must achieve the following new source performance standards (NSPS): There shall be no debris discharged and the pH shall be within the range of 6.0 to 9.0.

§ 429.105 Pretreatment standards for existing sources (PSES).

Any existing source subject to this subpart which introduces process wastewater pollutants into a publicly owned treatment works must comply with 40 CFR part 403.

§429.106 Pretreatment standards for new sources (PSNS).

Any new source subject to this subpart which introduces process wastewater pollutants into a publicly owned treatment works must comply with 40 CFR part 403.

Subpart J—Log Washing Subcategory

§429.110 Applicability; description of the log washing subcategory.

This subpart applies to discharges to waters of the United States and to the introduction of process wastewater pollutants into publicly owned treatment works from the log washing process in which water under pressure is applied to logs for the purpose of removing foreign material from the surface of the log before further processing.

§429.111 Effluent limitations representing the degree of effluent reduction attainable by the application of the best practicable control technology currently available (BPT).

Except as provided in 40 CFR 125.30 through 125.32, any existing point source subject to this subpart must achieve the following effluent limitations representing the degree of effluent reduction attainable by the application of the best practicable control technology currently available (BPT): There shall be no discharge of process wastewater pollutants to navigable waters containing a total suspended solids concentration greater than 50 mg/l and the pH shall be within the range of 6.0 to 9.0.

§429.112 Effluent limitations representing the degree of effluent reduction attainable by the application of the best conventional pollutant control technology (BCT). [Reserved]

§429.113 Effluent limitations representing the degree of effluent reduction attainable by the application of the best available technology economically achievable (BAT).

Except as provided in 40 CFR 125.30 through 125.32, any existing point source subject to this subpart must achieve the following effluent limitations representing the degree of effluent reduction attainable by the application of the best available technology economically achievable (BAT): There shall be no discharge of process wastewater pollutants into navigable waters.

§429.114 New source performance standards (NSPS).

Any new source subject to this subpart must achieve the following new source performance standards (NSPS): There shall be no discharge of process wastewater pollutants into navigable waters.

§429.115 Pretreatment standards for existing sources (PSES).

Any existing source subject to this subpart which introduces process wastewater pollutants into a publicly owned treatment works must comply with 40 CFR part 403.

§429.116 Pretreatment standards for new sources (PSNS).

Any new source subject to this subpart which introduces process wastewater pollutants into a publicly owned treatment works must comply with 40 CFR part 403.

Subpart K—Sawmills and Planing Mills Subcategory

§429.120 Applicability; description of the sawmills and planing mills subcategory.

This subpart applies to discharges to waters of the United States and to the introduction of process wastewater pollutants into publicly owned treatment works from the timber products processing procedures that include all or part of the following operations: bark removal (other than hydraulic barking as defined in §429.11 of this part), sawing, resawing, edging, trimming, planing and machining.

§429.121 Effluent limitations representing the degree of effluent reduction attainable by the application of the best practicable control technology currently available (BPT).

Except as provided in 40 CFR 125.30 through 125.32, any existing point

source subject to this subpart must achieve the following effluent limitations representing the degree of effluent reduction attainable by the application of the best practicable control technology (BPT): There shall be no discharge of process wastewater pollutants into navigable waters.

§ 429.122 Effluent limitations representing the degree of effluent reduction attainable by the application of the best conventional pollutant control technology (BCT). [Reserved]

§ 429.123 Effluent limitations representing the degree of effluent reduction attainable by the application of the best available technology economically achievable (BAT).

Except as provided in 40 CFR 125.30 through 125.32, any existing point source subject to this subpart must achieve the following effluent limitations representing the degree of effluent reduction attainable by the application of the best available technology economically achievable (BAT): There shall be no discharge of process wastewater pollutants into navigable waters.

§ 429.124 New source performance standards (NSPS).

Any new source subject to this subpart must achieve the following new source performance standards (NSPS): There shall be no discharge of process wastewater pollutants into navigable waters.

§ 429.125 Pretreatment standards for existing sources (PSES).

Any existing source subject to this subpart which introduces process wastewater pollutants into a publicly owned treatment works must comply with 40 CFR part 403.

§ 429.126 Pretreatment standards for new sources (PSNS).

Any new source subject to this subpart which introduces process wastewater pollutants into a publicly owned treatment works must comply with 40 CFR part 403.

Subpart L—Finishing Subcategory

§ 429.130 Applicability; description of the finishing subcategory.

This subpart applies to discharges to waters of the United States and to the introduction of process wastewater pollutants into publicly owned treatment works from the drying, planing, dipping, staining, end coating, moisture proofing, fabrication, and by-product utilization timber processing operations not otherwise covered by specific guidelines and standards.

§ 429.131 Effluent limitations representing the degree of effluent reduction attainable by the application of the best practicable control technology currently available (BPT).

Except as provided in 40 CFR 125.30 through 125.32, any existing point source subject to this subpart must achieve the following effluent limitations representing the degree of effluent reduction attainable by the application of the best practicable control technology (BPT): There shall be no discharge of process wastewater pollutants into navigable waters.

§ 429.132 Effluent limitations representing the degree of effluent reduction attainable by the application of the best conventional pollutant control technology (BCT). [Reserved]

§ 429.133 Effluent limitations representing the degree of effluent reduction attainable by the application of the best available technology economically achievable (BAT).

Except as provided in 40 CFR 125.30 through 125.32, any existing point source subject to this subject must achieve the following effluent limitations representing the degree of effluent reduction attainable by the application of the best available technology economically achievable (BAT): There shall be no discharge of process wastewater pollutants into navigable waters.

§ 429.134 New source performance standards (NSPS).

Any new source subject to this subpart must achieve the following new source performance standards (NSPS):

There shall be no discharge of process wastewater pollutants into navigable waters.

§ 429.135 Pretreatment standards for existing sources (PSES).

Any existing source subject to this subpart which introduces process wastewater pollutants into a publicly owned treatment works must comply with 40 CFR part 403.

§ 429.136 Pretreatment standards for new sources (PSNS).

Any new source subject to this subpart which introduces process wastewater pollutants into a publicly owned treatment works must comply with 40 CFR part 403.

Subpart M—Particleboard Manufacturing Subcategory

§ 429.140 Applicability; description of the particleboard manufacturing subcategory.

This subpart applies to discharges to waters of the United States and to the introduction of process wastewater pollutants into publicly owned treatment works from any plant which manufactures particleboard.

§ 429.141 Effluent limitations representing the degree of effluent reduction attainable by the application of the best practicable control technology currently available (BPT).

Except as provided in 40 CFR 125.30 through 125.32, any existing point source subject to this subpart must achieve the following effluent limitations representing the degree of effluent reduction attainable by the application of the best practicable control technology (BPT): There shall be no discharge of process wastewater pollutants into navigable waters.

§ 429.142 Effluent limitations representing the degree of effluent reduction attainable by the application of the best conventional pollutant control technology (BCT). [Reserved]

§ 429.143 Effluent limitations representing the degree of effluent reduction attainable by the application of the best available technology economically achievable (BAT).

Except as provided in 40 CFR 125.30 through 125.32, any existing point source subject to this subpart must achieve the following effluent limitations representing the degree of effluent reduction attainable by the application of the best available technology economically achievable (BAT): There shall be no discharge of process wastewater pollutants into navigable waters.

§ 429.144 New source performance standards (NSPS).

Any new source subject to this subpart must achieve the following new source performance standards (NSPS): There shall be no discharge of process wastewater pollutants into navigable waters.

§ 429.145 Pretreatment standards for existing sources (PSES).

Any existing source subject to this subpart which introduces process wastewater pollutants into a publicly owned treatment works must comply with 40 CFR part 403.

§ 429.146 Pretreatment standards for new sources (PSNS).

Any new source subject to this subpart which introduce process wastewater pollutants into a publicly owned treatment works must comply with 40 CFR part 403.

Subpart N—Insulation Board Subcategory

§ 429.150 Applicability; description of the insulation board subcategory.

This subpart applies to discharges to waters of the United States and to the introduction of process wastewater pollutants into publicly owned treatment works from plants which produce insulation board using wood as the primary

raw material. Specifically excluded from this subpart is the manufacture of insulation board from the primary raw material bagasse.

§ 429.151 Effluent limitations representing the degree of effluent reduction attaintable by the application of the best practicable control technology currently available (BPT).

Except as provided in 40 CFR 125.30 through 125.32, any existing point source subject to this subpart must achieve the following effluent limitations representing the degree of effluent reduction attainable by the application of the best practicable control technology currently available (BPT):

SUBPART N

Pollutant or pollutant property	BPT effluent limitations	
	Maximum for any 1 day	Average of daily values for 30 consecutive days
	kg/kkg (lb/1000 lb) of gross production	
BOD5	8.13	4.32
TSS	5.69	2.72
pH	.....	(1)

[1] Within the range 6.0 to 9.0 at all times.

§ 429.152 [Reserved]

§ 429.153 Effluent limitations representing the degree of effluent reduction attainable by the application of the best available technology economically achievable (BAT). [Reserved]

§ 429.154 New source performance standards (NSPS).

Any new source subject to this subpart must achieve the following new source performance standards (NSPS): There shall be no discharge of process wastewater pollutants into navigable waters.

§ 429.155 Pretreatment standards for existing sources (PSES).

Any existing source subject to this subpart which introduces process wastewater pollutants into publicly owned treatment works must comply with 40 CFR part 403.

§ 429.156 Pretreatment standards for new sources (PSNS).

Any new source subject to this subpart which introduces process wastewater pollutants into publicly owned treatment works must comply with 40 CFR part 403.

Subpart O—Wood Furniture and Fixture Production Without Water Wash Spray Booth(s) or Without Laundry Facilities Subcategory

§ 429.160 Applicability; description of the wood furniture and fixture production without water wash spray booth(s) or without laundry facilities subcategory.

This subpart applies to discharges to waters of the United States and to the introduction of process wastewater pollutants into publicly owned treatment works from the manufacture of wood furniture and fixtures at establishments that (a) do not utilize water wash spray booths to collect and contain the overspray from spray applications of finishing materials and (b) do not maintain on-site laundry facilities for fabric utilized in various finishing operations.

§ 429.161 Effluent limitations representing the degree of effluent reduction attainable by the application of the best practicable control technology currently available (BPT).

Except as provided in 40 CFR 125.30 through 125.32, any existing point source subject to this subpart must achieve the following effluent limitations representing the degree of effluent reduction attainable by the application of the best practicable control technology limitations (BPT): There shall be no discharge of process wastewater pollutants into navigable waters.

§ 429.162 Effluent limitations representing the degree of effluent reduction attainable by the application of the best conventional pollutant control technology (BCT). [Reserved]

§ 429.163 Effluent limitations representing the degree of effluent reduction attainable by the application of the best available technology economically achievable (BAT).

Except as provided in 40 CFR 125.30 through 125.32, any existing point source subject to this subpart must achieve the following effluent limitations representing the degree of effluent reduction attainable by the application of the best available technology economically achievable (BAT): There shall be no discharge of process wastewater pollutants into navigable waters.

§ 429.164 New source performance standards (NSPS).

Any new source subject to this subpart must achieve the following new source performance standards (NSPS):

There shall be no discharge of process wastewater pollutants into navigable waters.

§ 429.165 Pretreatment standards for existing sources (PSES).

Any existing source subject to this subpart which introduces process wastewater pollutants into a publicly owned treatment works must comply with 40 CFR part 403.

§ 429.166 Pretreatment standards for new sources (PSNS).

Any new source subject to this subpart which introduces process wastewater pollutants into a publicly owned treatment works must comply with 40 CFR part 403.

Subpart P—Wood Furniture and Fixture Production With Water Wash Spray Booth(s) or With Laundry Facilities Subcategory

§ 429.170 Applicability; description of the wood furniture and fixture production with water wash spray booth(s) or with laundry facilities subcategory.

This subpart applies to discharges to waters of the United States and to the introduction of process wastewater pollutants into publicly owned treatment works from the manufacture of wood furniture and fixtures at establishments that either (a) utilize water wash spray booth(s) to collect and contain the overspray from spray applications of finishing materials, or (b) utilize on-site laundry facilities for fabric utilized in various finishing operations.

§ 429.171 Effluent limitations representing the degree of effluent reduction attainable by the application of the best practicable control technology currently available (BPT).

Except as provided in 40 CFR 125.30 through 125.32, any existing point source subject to this subpart must achieve the following effluent limitations representing the degree of effluent reduction attainable by the application of the best practicable control technology (BPT): Settleable solids shall be less than or equal to 0.2 ml/l and pH shall be between 6.0 and 9.0 at all times.

§ 429.172 Effluent limitations representing the degree of effluent reduction attainable by the application of the best conventional pollutant control technology (BCT). [Reserved]

§ 429.173 Effluent limitations representing the degree of effluent reduction attainable by the application of the best available technology economically achievable (BAT).

Except as provided in 40 CFR 125.30 through 125.32, any existing point source subject to this subpart must

achieve the following effluent limitations representing the degree of effluent reduction attainable by the application of the best available technology economically achievable (BAT): There shall be no discharge of process wastewater pollutants.

§ 429.174 New source performance standards (NSPS).

Any new source subject to this subpart must achieve the following new source performance standards (NSPS): There shall be no discharge of process wastewater pollutants.

§ 429.175 Pretreatment standards for existing sources (PSES).

Any existing source subject to this subpart which introduces process wastewater pollutants into a publicly owned treatment works must comply with 40 CFR part 403.

§ 429.176 Pretreatment standards for new sources (PSNS).

Any new source subject to this subpart which introduces process wastewater pollutants into a publicly owned treatment works must comply with 40 CFR part 403.

PART 430—THE PULP, PAPER, AND PAPERBOARD POINT SOURCE CATEGORY

GENERAL PROVISIONS

Sec.
430.00 Applicability.
430.01 General definitions.
430.02 Monitoring requirements.
430.03 Best management practices (BMPs) for spent pulping liquor, soap, and turpentine management, spill prevention, and control.

Subpart A—Dissolving Kraft Subcategory

430.10 Applicability; description of the dissolving kraft subcategory.
430.11 Specialized definitions.
430.12 Effluent limitations representing the degree of effluent reduction attainable by the application of best practicable control technology currently available (BPT).
430.13 Effluent limitations guidelines representing the degree of effluent reduction attainable by the best conventional pollutant control technology (BCT).
430.14 Effluent limitations representing the degree of effluent reduction attainable by the application of best available technology economically achievable (BAT).
430.15 New source performance standards (NSPS).
430.16 Pretreatment standards for existing sources (PSES).
430.17 Pretreatment standards for new sources (PSNS).

Subpart B—Bleached Papergrade Kraft and Soda Subcategory

430.20 Applicability; description of the bleached papergrade kraft and soda subcategory.
430.21 Specialized definitions.
430.22 Effluent limitations representing the degree of effluent reduction attainable by the application of best practicable control technology currently available (BPT).
430.23 Effluent limitations representing the degree of effluent reduction attainable by the best conventional pollutant control technology (BCT).
430.24 Effluent limitations representing the degree of effluent reduction attainable by the application of best available technology economically achievable (BAT).
430.25 New source performance standards (NSPS).
430.26 Pretreatment standards for existing sources (PSES).
430.27 Pretreatment standards for new sources (PSNS).
430.28 Best management practices (BMPs).

Subpart C—Unbleached Kraft Subcategory

430.30 Applicability; description of the unbleached kraft subcategory.
430.31 Specialized definitions.
430.32 Effluent limitations representing the degree of effluent reduction attainable by the application of best practicable control technology currently available (BPT).
430.33 Effluent limitations representing the degree of effluent reduction attainable by the best conventional pollutant control technology (BCT).
430.34 Effluent limitations representing the degree of effluent reduction attainable by the application of best available technology economically achievable (BAT).
430.35 New source performance standards (NSPS).
430.36 Pretreatment standards for existing (PSES).
430.37 Pretreatment standards for new sources (PSNS).

Subpart D—Dissolving Sulfite Subcategory

430.40 Applicability; description of the dissolving sulfite subcategory.

430.41 Specialized definitions.
430.42 Effluent limitations representing the degree of effluent reduction attainable by the application of best practicable control technology currently available (BPT).
430.43 Effluent limitations representing the degree of effluent reduction attainable by the best conventional pollutant control technology (BCT).
430.44 Effluent limitations representing the degree of effluent reduction attainable by the application of best available technology economically achievable (BAT).
430.45 New source performance standards (NSPS).
430.46 Pretreatment standards for existing sources (PSES).
430.47 Pretreatment standards for new sources (PSNS).

Subpart E—Papergrade Sulfite Subcategory

430.50 Applicability; description of the papergrade sulfite subcategory.
430.51 Specialized definitions.
430.52 Effluent limitations representing the degree of effluent reduction attainable by the application of best practicable control technology currently available (BPT).
430.53 Effluent limitations representing the degree of effluent reduction attainable by the best conventional pollutant control technology (BCT).
430.54 Effluent limitations representing the degree of effluent reduction attainable by the application of best available technology economically achievable (BAT).
430.55 New source performance standards (NSPS).
430.56 Pretreatment standards for existing sources (PSES).
430.57 Pretreatment standards for new sources (PSNS).
430.58 Best management practices (BMPs).

Subpart F—Semi-Chemical Subcategory

430.60 Applicability; description of the semi-chemical subcategory.
430.61 Specialized definitions.
430.62 Effluent limitations representing the degree of effluent reduction attainable by the application of best practicable control technology currently available (BPT).
430.63 Effluent limitations representing the degree of effluent reduction attainable by the best conventional pollutant control technology (BCT).
430.64 Effluent limitations representing the degree of effluent reduction attainable by the application of best available technology economically achievable (BAT).
430.65 New source performance standards (NSPS).
430.66 Pretreatment standards for existing sources (PSES).
430.67 Pretreatment standards for new sources (PSNS).

Subpart G—Mechanical Pulp Subcategory

430.70 Applicability; description of the mechanical pulp subcategory.
430.71 Specialized definitions.
430.72 Effluent limitations representing the degree of effluent reduction attainable by the application of best practicable control technology currently available (BPT).
430.73 Effluent limitations representing the degree of effluent reduction attainable by the best conventional pollutant control technology (BCT).
430.74 Effluent limitations representing the degree of effluent reduction attainable by the application of best available technology economically achievable (BAT).
430.75 New source performance standards (NSPS).
430.76 Pretreatment standards for existing sources (PSES).
430.77 Pretreatment standards for new sources (PSNS).

Subpart H—Non-Wood Chemical Pulp Subcategory

430.80 Applicability; description of the non-wood chemical pulp subcategory.
430.81 Specialized definitions.
430.82 Effluent limitations representing the degree of effluent reduction attainable by the application of best practicable control technology currently available (BPT). [Reserved]
430.83 Effluent limitations representing the degree of effluent reduction attainable by the best conventional pollutant control technology (BCT). [Reserved]
430.84 Effluent limitations representing the degree of effluent reduction attainable by the application of best available technology economically achievable (BAT). [Reserved]
430.85 New source performance standards (NSPS). [Reserved]
430.86 Pretreatment standards for existing sources (PSES). [Reserved]
430.87 Pretreatment standards for new sources (PSNS). [Reserved]

Subpart I—Secondary Fiber Deink Subcategory

430.90 Applicability; description of the secondary fiber deink subcategory.
430.91 Specialized definitions.
430.92 Effluent limitations representing the degree of effluent reduction attainable

by the application of best practicable control technology currently available (BPT).
430.93 Effluent limitations representing the degree of effluent reduction attainable by the best conventional pollutant control technology (BCT).
430.94 Effluent limitations representing the degree of effluent reduction attainable by the application of best available technology economically achievable (BAT).
430.95 New source performance standards (NSPS).
430.96 Pretreatment standards for existing sources (PSES).
430.97 Pretreatment standards for new sources (PSNS).

Subpart J—Secondary Fiber Non-Deink Subcategory

430.100 Applicability; description of the secondary fiber non-deink subcategory.
430.101 Specialized definitions.
430.102 Effluent limitations representing the degree of effluent reduction attainable by the application of best practicable control technology currently available (BPT).
430.103 Effluent limitations representing the degree of effluent reduction attainable by the best conventional pollutant control technology (BCT).
430.104 Effluent limitations representing the degree of effluent reduction attainable by the application of best available technology economically achievable (BAT).
430.105 New source performance standards (NSPS).
430.106 Pretreatment standards for existing sources (PSES).
430.107 Pretreatment standards for new sources (PSNS).

Subpart K—Fine and Lightweight Papers From Purchased Pulp Subcategory

430.110 Applicability; description of the fine and lightweight papers from purchased pulp subcategory.
430.111 Specialized definitions.
430.112 Effluent limitations representing the degree of effluent reduction attainable by the application of best practicable control technology currently available (BPT).
430.113 Effluent limitations representing the degree of effluent reduction attainable by the best conventional pollutant control technology (BCT).
430.114 Effluent limitations representing the degree of effluent reduction attainable by the application of best available technology economically achievable (BAT).
430.115 New source performance standards (NSPS).
430.116 Pretreatment standards for existing sources (PSES).
430.117 Pretreatment standards for new sources (PSNS).

Subpart L—Tissue, Filter, Non-Woven, and Paperboard From Purchased Pulp Subcategory

430.120 Applicability; description of the tissue, filter, non-woven, and paperboard from purchased pulp subcategory.
430.121 Specialized definitions.
430.122 Effluent limitations representing the degree of effluent reduction attainable by the application of best practicable control technology currently available (BPT).
430.123 Effluent limitations representing the degree of effluent reduction attainable by the best conventional pollutant control technology (BCT).
430.124 Effluent limitations representing the degree of effluent reduction attainable by the application of best available technology economically achievable (BAT).
430.125 New source performance standards (NSPS).
430.126 Pretreatment standards for existing sources (PSES).
430.127 Pretreatment standards for new sources (PSNS).
APPENDIX A TO PART 430—METHODS 1650 AND 1653

AUTHORITY: Sections 301, 304, 306, 307, 308, 402, and 501 of the Clean Water Act, as amended, (33 U.S.C. 1311, 1314, 1316, 1317, 1318, 1342, and 1361), and Section 112 of the Clean Air Act, as amended (42 U.S.C. 7412).

SOURCE: 63 FR 18635, Apr. 15, 1998, unless otherwise noted.

GENERAL PROVISIONS

§ 430.00 Applicability.

(a) This part applies to any pulp, paper, or paperboard mill that discharges or may discharge process wastewater pollutants to the waters of the United States, or that introduces or may introduce process wastewater pollutants into a publicly owned treatment works.

(b) The following table presents the subcategorization scheme codified in this part, with references to former subpart designations contained in the 1997 edition of 40 CFR parts 425 through 699:

SUBCATEGORIZATION SCHEME WITH REFERENCES TO FORMER SUBPARTS CONTAINED IN THE JULY 1, 1997 EDITION OF 40 CFR PARTS 425 THROUGH 699

Final codified subpart	Final subcategorization scheme	Types of products covered in the subpart
A	Dissolving Kraft	Dissolving pulp at kraft mills (F[a])
B	Bleached Papergrade Kraft and Soda.	Market pulp at bleached kraft mills (G[a]); paperboard, coarse paper, and tissue paper at bleached kraft mills (H[a]); pulp and fine papers at bleached kraft mills (I[a]); and pulp and paper at soda mills (P[a]).
C	Unbleached Kraft	Pulp and paper at unbleached kraft mills including linerboard or bag paper and other mixed products (A[a]); pulp and paper using the unbleached kraft-neutral sulfite semi-chemical (cross recovery) process (D[a]); and pulp and paper at combined unbleached kraft and semi-chemical mills, wherein the spent semi-chemical cooking liquor is burned within the unbleached kraft chemical recovery system (V[a]).
D	Dissolving Sulfite	Pulp at dissolving sulfite mills for the following grades: nitration, viscose, cellophane, and acetate (K[a]).
E	Papergrade Sulfite —Calcium-, Magnesium-, or Sodium-based pulps. —Ammonium-based pulps. —Specialty grade pulps.	Pulp and paper at papergrade sulfite mills where blow pit pulp washing techniques are used (J[a]) and pulp and paper at papergrade sulfite mills where vacuum or pressure drums are used to wash pulp (U[a]).
F	Semi-Chemical	Pulp and paper at semi-chemical mills using an ammonia base or a sodium base (B[a]).
G	Mechanical Pulp	Pulp and paper at groundwood chemi-mechanical mills (L[a]); pulp and paper at groundwood mills through the application of the thermo-mechanical process (M[a]); pulp and coarse paper, molded pulp products, and newsprint at groundwood mills (N[a]); and pulp and fine paper at groundwood mills (O[a]).
H	Non-Wood Chemical Pulp	Pulp and paper at non-wood chemical pulp mills.
I	Secondary Fiber Deink	Pulp and paper at deink mills including fine papers, tissue papers, or newsprint (Q[a]).
J	Secondary Fiber Non-Deink	Paperboard from wastepaper from noncorrugating medium furnish or from corrugating medium furnish (E[a]); tissue paper from wastepaper without deinking at secondary fiber mills (T[a]); molded products from wastepaper without deinking (W[a]); and builders' paper and roofing felt from wastepaper (40 CFR Part 431, Subpart A[a]).
K	Fine and Lightweight Papers from Purchased Pulp.	Fine Papers at nonintegrated mills using wood fiber furnish or cotton fiber furnish (R[a]); and lightweight papers at nonintegrated mills or lightweight electrical papers at nonintegrated mills (X[a]).
L	Tissue, Filter, Non-woven, and Paperboard from Purchased Pulp.	Tissue papers at nonintegrated mills (S[a]); filter and non-woven papers at nonintegrated mills (Y[a]); and paperboard at nonintegrated mills (Z[a]).

[a] This subpart is contained in the 40 CFR parts 425 through 699, edition revised as of July 1, 1997.

§ 430.01 General definitions.

In addition to the definitions set forth in 40 CFR part 401 and 40 CFR 403.3, the following definitions apply to this part:

(a) *Adsorbable organic halides (AOX).* A bulk parameter that measures the total mass of chlorinated organic matter in water and wastewater.

(b) *Annual average.* The mean concentration, mass loading or production-normalized mass loading of a pollutant over a period of 365 consecutive days (or such other period of time determined by the permitting authority to be sufficiently long to encompass expected variability of the concentration, mass loading, or production-normalized mass loading at the relevant point of measurement).

(c) *Bleach plant.* All process equipment used for bleaching beginning with the first application of bleaching agents (e.g., chlorine, chlorine dioxide, ozone, sodium or calcium hypochlorite, or peroxide), each subsequent extraction stage, and each subsequent stage where bleaching agents are applied to the pulp. For mills in subpart E of this part producing specialty grades of pulp, the bleach plant includes process equipment used for the hydrolysis or extraction stages prior to the first application of bleaching agents. Process equipment used for oxygen delignification prior to the application of bleaching agents is not part of the bleach plant.

(d) *Bleach plant effluent.* The total discharge of process wastewaters from the bleach plant from each physical

bleach line operated at the mill, comprising separate acid and alkaline filtrates or the combination thereof.

(e) *Chemical oxygen demand (COD).* A bulk parameter that measures the oxygen-consuming capacity of organic and inorganic matter present in water or wastewater. It is expressed as the amount of oxygen consumed from a chemical oxidant in a specific test.

(f) *Elemental chlorine-free (ECF).* Any process for bleaching pulps in the absence of elemental chlorine and hypochlorite that uses exclusively chlorine dioxide as the only chlorine-containing bleaching agent.

(g) *End of the pipe.* The point at which final mill effluent is discharged to waters of the United States or introduced to a POTW.

(h) *Fiber line.* A series of operations employed to convert wood or other fibrous raw material into pulp. If the final product is bleached pulp, the fiber line encompasses pulping, de-knotting, brownstock washing, pulp screening, centrifugal cleaning, and multiple bleaching and washing stages.

(i) *Minimum level (ML).* The level at which the analytical system gives recognizable signals and an acceptable calibration point. The following minimum levels apply to pollutants in this part:

Pollutant	Method	Minimum level
2,3,7,8-TCDD	1613	10 pg/L [a]
2,3,7,8-TCDF	1613	10 pg/L [a]
Trichlorosyringol	1653	2.5 ug/L [b]
3,4,5-Trichlorocatechol	1653	5.0 ug/L [b]
3,4,6-Trichlorocatechol	1653	5.0 ug/L [b]
3,4,5-Trichloroguaiacol	1653	2.5 ug/L [b]
3,4,6-Trichloroguaiacol	1653	2.5 ug/L [b]
4,5,6-Trichloroguaiacol	1653	2.5 ug/L [b]
2,4,5-Trichlorophenol	1653	2.5 ug/L [b]
2,4,6-Trichlorophenol	1653	2.5 ug/L [b]
Tetrachlorocatechol	1653	5.0 ug/L [b]
Tetrachloroguaiacol	1653	5.0 ug/L [b]
2,3,4,6-Tetrachlorophenol	1653	2.5 ug/L [b]
Pentachlorophenol	1653	5.0 ug/L [b]
AOX	1650	20 ug/L [b]

[a] Picograms per liter.
[b] Micrograms per liter.

(j) *New source.* (1) Notwithstanding the criteria codified at 40 CFR 122.29(b)(1), a source subject to subpart B or E of this part is a ''new source'' if it meets the definition of ''new source'' at 40 CFR 122.2 and:

(i) It is constructed at a site at which no other source is located; or

(ii) It totally replaces the process or production equipment that causes the discharge of pollutants at an existing source, including the total replacement of a fiber line that causes the discharge of pollutants at an existing source, except as provided in paragraph (j)(2) of this section; or

(iii) Its processes are substantially independent of an existing source at the same site. In determining whether these processes are substantially independent, the Director shall consider such factors as the extent to which the new facility is integrated with the existing plant; and the extent to which the new facility is engaged in the same general type of activity as the existing source.

(2) The following are examples of changes made by mills subject to subparts B or E of this part that alone do not cause an existing mill to become a ''new source'':

(i) Upgrades of existing pulping operations;

(ii) Upgrades or replacement of pulp screening and washing operations;

(iii) Installation of extended cooking and/or oxygen delignification systems or other post-digester, pre-bleaching delignification systems;

(iv) Bleach plant modifications including changes in methods or amounts of chemical applications, new chemical applications, installation of new

bleaching towers to facilitate replacement of sodium or calcium hypochlorite, and installation of new pulp washing systems; or

(v) Total replacement of process or production equipment that causes the discharge of pollutants at an existing source (including a replacement fiber line), but only if such replacement is performed for the purpose of achieving limitations that have been included in the discharger's NPDES permit pursuant to § 430.24(b).

(k) *Non-continuous discharger.* (1) Except as provided in paragraph (k)(2) of this section, a non-continuous discharger is a mill which is prohibited by the NPDES authority from discharging pollutants during specific periods of time for reasons other than treatment plant upset control, such periods being at least 24 hours in duration. A mill shall not be deemed a non-continuous discharger unless its permit, in addition to setting forth the prohibition described above, requires compliance with the effluent limitations established for non-continuous dischargers and also requires compliance with maximum day and average of 30 consecutive days effluent limitations. Such maximum day and average of 30 consecutive days effluent limitations for non-continuous dischargers shall be established by the NPDES authority in the form of concentrations which reflect wastewater treatment levels that are representative of the application of the best practicable control technology currently available, the best conventional pollutant control technology, or new source performance standards in lieu of the maximum day and average of 30 consecutive days effluent limitations for conventional pollutants set forth in each subpart.

(2) A mill is a non-continuous discharger for the purposes of determining applicable effluent limitations under subpart B or E of this part (other than conventional limits for existing sources) if, for reasons other than treatment plant upset control (e.g., protecting receiving water quality), the mill is prohibited by the NPDES authority from discharging pollutants during specific periods of time or if it is required to release its discharge on a variable flow or pollutant loading rate basis.

(l) *POTW.* Publicly owned treatment works as defined at 40 CFR 403.3(o).

(m) *Process wastewater.* For subparts B and E only, process wastewater is any water that, during manufacturing or processing, comes into direct contact with or results from the production or use of any raw material, intermediate product, finished product, by-product, or waste product. For purposes of subparts B and E of this part, process wastewater includes boiler blowdown; wastewaters from water treatment and other utility operations; blowdowns from high rate (e.g., greater than 98 percent) recycled non-contact cooling water systems to the extent they are mixed and co-treated with other process wastewaters; wastewater, including leachates, from landfills owned by pulp and paper mills subject to subpart B or E of this part if the wastewater is commingled with wastewater from the mill's manufacturing or processing facility; and storm waters from the immediate process areas to the extent they are mixed and co-treated with other process wastewaters. For purposes of this part, contaminated groundwaters from on-site or off-site groundwater remediation projects are not process wastewater.

(n) *Production.* (1) For all limitations and standards specified in this part except those pertaining to AOX and chloroform: Production shall be defined as the annual off-the-machine production (including off-the-machine coating where applicable) divided by the number of operating days during that year. Paper and paperboard production shall be measured at the off-the-machine moisture content, except for subpart C of this part (as it pertains to pulp and paperboard production at unbleached kraft mills including linerboard or bag paper and other mixed products, and to pulp and paperboard production using the unbleached kraft neutral sulfite semi-chemical (cross recovery) process), and subparts F and J of this part (as they pertain to paperboard production from wastepaper from noncorrugating medium furnish or from corrugating medium furnish) where paper and paperboard production shall be measured in air-dry-tons (10%

moisture content). Market pulp shall be measured in air-dry tons (10% moisture). Production shall be determined for each mill based upon past production practices, present trends, or committed growth.

(2) For AOX and chloroform limitations and standards specified in subparts B and E of this part: Production shall be defined as the annual unbleached pulp production entering the first stage of the bleach plant divided by the number of operating days during that year. Unbleached pulp production shall be measured in air-dried-metric-tons (10% moisture) of brownstock pulp entering the bleach plant at the stage during which chlorine or chlorine-containing compounds are first applied to the pulp. In the case of bleach plants that use totally chlorine free bleaching processes, unbleached pulp production shall be measured in air-dried-metric tons (10% moisture) of brownstock pulp entering the first stage of the bleach plant from which wastewater is discharged. Production shall be determined for each mill based upon past production practices, present trends, or committed growth.

(o) *TCDD*. 2,3,7,8-tetrachlorodibenzo-p-dioxin.

(p) *TCDF*. 2,3,7,8-tetrachlorodibenzofuran.

(q) *Totally chlorine-free (TCF) bleaching*. Pulp bleaching operations that are performed without the use of chlorine, sodium hypochlorite, calcium hypochlorite, chlorine dioxide, chlorine monoxide, or any other chlorine-containing compound.

(r) *Wet Barking*. Wet barking operations shall be defined to include hydraulic barking operations and wet drum barking operations which are those drum barking operations that use substantial quantities of water in either water sprays in the barking drums or in a partial submersion of the drums in a ''tub'' of water.

[63 FR 18635, Apr. 15, 1998; 63 FR 42239, Aug. 7, 1998]

§ 430.02 Monitoring requirements.

This section establishes minimum monitoring frequencies for certain pollutants. Where no monitoring frequency is specified in this section or where the duration of the minimum monitoring frequency has expired under paragraphs (b) through (e) of this section, the permit writer or pretreatment control authority shall determine the appropriate monitoring frequency in accordance with 40 CFR 122.44(i) or 40 CFR part 403, as applicable.

(a) *BAT, NSPS, PSES, and PSNS monitoring frequency for chlorinated organic pollutants*. The following monitoring frequencies apply to discharges subject to subpart B or subpart E of this part:

CAS number	Pollutant	Minimum monitoring frequency	
		Non-TCF [a]	TCF [b]
1198556	Tetrachlorocatechol	Monthly	([c])
2539175	Tetrachloroguaiacol	Monthly	([c])
2539266	Trichlorosyringol	Monthly	([c])
2668248	4,5,6-trichloroguaiacol	Monthly	([c])
32139723	3,4,6-trichlorocatechol	Monthly	([c])
56961207	3,4,5-trichlorocatechol	Monthly	([c])
57057837	3,4,5-trichloroguaiacol	Monthly	([c])
58902	2,3,4,6-tetrachlorophenol	Monthly	([c])
60712449	3,4,6-trichloroguaiacol	Monthly	([c])
87865	Pentachlorophenol [d]	Monthly	([c])
88062	2,4,6-trichlorophenol [d]	Monthly	([c])
95954	2,4,5-trichlorophenol [d]	Monthly	([c])
1746016	2,3,7,8-TCDD	Monthly	([c])
51207319	2,3,7,8-TCDF	Monthly	([c])
67663	chloroform [e]	Weekly	([c])
59473040	AOX [f]	Daily	None specified.

[a] Non-TCF: Pertains to any fiber line that does not use exclusively TCF bleaching processes.

[b] TCF: Pertains to any fiber line that uses exclusively TCF bleaching processes, as disclosed by the discharger in its permit application under 40 CFR 122.21(g)(3) and certified under 40 CFR 122.22 or, for indirect dischargers, as reported to the pretreatment control authority under 40 CFR 403.12 (b), (d), or (e).

[c] This regulation does not specify a limit for this pollutant for TCF bleaching processes.

[d] Monitoring frequency does not apply to this compound when used as a biocide. The permitting or pretreatment control authority must determine the appropriate monitoring frequency for this compound, when used as a biocide, under 40 CFR 122.44(i) or 40 CFR part 403, as applicable.

[e] This regulation does not specify a limit for this pollutant for Subpart E mills.

[f] This regulation does not specify a limit for this pollutant for the ammonium-based or specialty grade sulfite pulp segments of Subpart E.

(b) *Duration of required monitoring for BAT, NSPS, PSES, and PSNS.* The monitoring frequencies specified in paragraph (a) of this section apply for the following time periods:

(1) For direct dischargers, a duration of 5 years commencing on the date the applicable limitations or standards from subpart B or subpart E of this part are first included in the discharger's NPDES permit;

(2) For existing indirect dischargers, until April 17, 2006;

(3) For new indirect dischargers, a duration of 5 years commencing on the date the indirect discharger commences operation.

(c) *Reduced monitoring frequencies for bleach plant pollutants under the Voluntary Advanced Technology Incentives Program.* The following monitoring frequencies apply to mills enrolled in the Voluntary Advanced Technology Incentives Program established under subpart B of this part for a duration of 5 years commencing after achievement of the applicable BAT limitations specified in § 430.24(b)(3) or NSPS specified in § 430.25(c)(1) for the following pollutants, except as noted in footnote f:

CAS number	Pollutant	Minimum monitoring frequency		
		Non-ECF [a]	Advanced ECF [b,f]	TCF [c]
1198556	Tetrachlorocatechol	Monthly	Monthly	([d])
2539175	Tetrachloroguiacol	Monthly	Monthly	([d])
2539266	Trichlorosyringol	Monthly	Monthly	([d])
2668248	4,5,6-trichloroguaiacol	Monthly	Monthly	([d])
32139723	3,4,6-trichlorocatechol	Monthly	Monthly	([d])
56961207	3,4,5-trichlorocatechol	Monthly	Monthly	([d])
57057837	3,4,5-trichloroguaiacol	Monthly	Monthly	([d])
58902	2,3,4,6-tetrachlorophenol	Monthly	Monthly	([d])
60712449	3,4,6-trichloroguaiacol	Monthly	Monthly	([d])
87865	Pentachlorophenol [e]	Monthly	Monthly	([d])
88062	2,4,6-trichlorophenol [e]	Monthly	Monthly	([d])
95954	2,4,5-trichlorophenol [e]	Monthly	Monthly	([d])
1746016	2,3,7,8-TCDD	Monthly	Monthly	([d])
51207319	2,3,7,8-TCDF	Monthly	Monthly	([d])
67663	Chloroform	Weekly	Monthly	([d])

[a] Non-ECF: Pertains to any fiber line that does not use exclusively ECF or TCF bleaching processes.

[b] Advanced ECF: Pertains to any fiber line that uses exclusively Advanced ECF bleaching processes, or exclusively ECF and TCF bleaching processes as disclosed by the discharger in its permit application under 40 CFR 122.21(g)(3) and certified under 40 CFR 122.22. Advanced ECF consists of the use of extended delignification or other technologies that achieve at least the Tier I performance levels specified in § 430.24(b)(4)(i).

[c] TCF: Pertains to any fiber line that uses exclusively TCF bleaching processes, as disclosed by the discharger in its permit application under 40 CFR 122.21(g)(3) and certified under 40 CFR 122.22.

[d] This regulation does not specify a limit for this pollutant for TCF bleaching processes.

[e] Monitoring frequency does not apply to this compound when used as a biocide. The permitting authority must determine the appropriate monitoring frequency for this compound, when used as a biocide, under 40 CFR 122.44(i).

[f] Monitoring requirements for these pollutants by mills certifying as Advanced ECF in their NPDES permit application or other communication to the permitting authority will be suspended after one year of monitoring. The permitting authority must determine the appropriate monitoring frequency for these pollutants beyond that time under 40 CFR 122.44(i).

(d) *Reduced monitoring frequencies for AOX under the Voluntary Advanced Technology Incentives Program (year one).* The following monitoring frequencies apply to direct dischargers enrolled in the Voluntary Advanced Technology Incentives Program established under Subpart B of this part for a duration of one year after achievement of the applicable BAT limitations specified in § 430.24(b)(4)(i) or NSPS specified in § 430.25(c)(2):

CAS number	Pollutant	Non-ECF, any tier [a]	Advanced ECF, any tier [b]	TCF, any tier [c]
59473040	AOX	Daily	Weekly	None specified.

[a] Non-ECF: Pertains to any fiber line that does not use exclusively ECF or TCF bleaching processes.

[b] Advanced ECF: Pertains to any fiber line that uses exclusively Advanced ECF bleaching processes or exclusively ECF and TCF bleaching processes, as disclosed by the discharger in its permit application under 40 CFR 122.21(g)(3) and certified under 40 CFR 122.22. Advanced ECF consists of the use of extended delignification or other technologies that achieve at least the Tier I performance levels specified in § 430.24(b)(4)(i).

[c] TCF: Pertains to any fiber line that uses exclusively TCF bleaching processes, as disclosed by the discharger in its permit application under 40 CFR 122.21(g)(3) and certified under 40 CFR 122.22.

(e) *Reduced monitoring frequencies for AOX under the Voluntary Advanced Technology Incentives Program (years two through five)*. The following monitoring frequencies apply to mills enrolled in the Voluntary Advanced Technology Incentives Program established under Subpart B of this part for a duration of four years starting one year after achievement of the applicable BAT limitations specified in § 430.24(b)(4)(i) or NSPS specified in § 430.25(c)(2):

CAS number	Pollutant	Non-ECF any tier [a]	Advanced ECF—tier I [b]	Advanced ECF—tier II [b]	Advanced ECF—tier III [b]	TCF—any tier [c]
59473040	AOX	Daily	Monthly	Quarterly	Annually	None specified.

[a] Non-ECF: Pertains to any fiber line that does not use exclusively ECF or TCF bleaching processes.
[b] Advanced ECF: Pertains to any fiber line that uses exclusively Advanced ECF bleaching processes or exclusively ECF and TCF bleaching processes, as disclosed by the discharger in its permit application under 40 CFR 122.21(g)(3) and certified under 40 CFR 122.22. Advanced ECF consists of the use of extended delignification or other technologies that achieve at least the Tier I performance levels specified in § 430.24(b)(4)(i).
[c] TCF: Pertains to any fiber line that uses exclusively TCF bleaching processes, as disclosed by the discharger in its permit application under 40 CFR 122.21(g)(3) and certified under 40 CFR 122.22.

§ 430.03 Best management practices (BMPs) for spent pulping liquor, soap, and turpentine management, spill prevention, and control.

(a) *Applicability*. This section applies to direct and indirect discharging pulp, paper, and paperboard mills with pulp production in subparts B (Bleached Papergrade Kraft and Soda) and E (Papergrade Sulfite).

(b) *Specialized definitions*. (1) *Action Level:* A daily pollutant loading that when exceeded triggers investigative or corrective action. Mills determine action levels by a statistical analysis of six months of daily measurements collected at the mill. For example, the lower action level may be the 75th percentile of the running seven-day averages (that value exceeded by 25 percent of the running seven-day averages) and the upper action level may be the 90th percentile of the running seven-day averages (that value exceeded by 10 percent of the running seven-day averages).

(2) *Equipment Items in Spent Pulping Liquor, Soap, and Turpentine Service:* Any process vessel, storage tank, pumping system, evaporator, heat exchanger, recovery furnace or boiler, pipeline, valve, fitting, or other device that contains, processes, transports, or comes into contact with spent pulping liquor, soap, or turpentine. Sometimes referred to as ''equipment items.''

(3) *Immediate Process Area:* The location at the mill where pulping, screening, knotting, pulp washing, pulping liquor concentration, pulping liquor processing, and chemical recovery facilities are located, generally the battery limits of the aforementioned processes. ''Immediate process area'' includes spent pulping liquor storage and spill control tanks located at the mill, whether or not they are located in the immediate process area.

(4) *Intentional Diversion:* The planned removal of spent pulping liquor, soap, or turpentine from equipment items in spent pulping liquor, soap, or turpentine service by the mill for any purpose including, but not limited to, maintenance, grade changes, or process shutdowns.

(5) *Mill:* The owner or operator of a direct or indirect discharging pulp, paper, or paperboard manufacturing facility subject to this section.

(6) *Senior Technical Manager:* The person designated by the mill manager to review the BMP Plan. The senior technical manager shall be the chief engineer at the mill, the manager of pulping and chemical recovery operations, or other such responsible person designated by the mill manager who has knowledge of and responsibility for pulping and chemical recovery operations.

(7) *Soap:* The product of reaction between the alkali in kraft pulping liquor and fatty acid portions of the wood, which precipitate out when water is

evaporated from the spent pulping liquor.

(8) *Spent Pulping Liquor:* For kraft and soda mills ''spent pulping liquor'' means black liquor that is used, generated, stored, or processed at any point in the pulping and chemical recovery processes. For sulfite mills ''spent pulping liquor'' means any intermediate, final, or used chemical solution that is used, generated, stored, or processed at any point in the sulfite pulping and chemical recovery processes (e.g., ammonium-, calcium-, magnesium-, or sodium-based sulfite liquors).

(9) *Turpentine:* A mixture of terpenes, principally pinene, obtained by the steam distillation of pine gum recovered from the condensation of digester relief gases from the cooking of softwoods by the kraft pulping process. Sometimes referred to as sulfate turpentine.

(c) *Requirement to implement Best Management Practices.* Each mill subject to this section must implement the Best Management Practices (BMPs) specified in paragraphs (c)(1) through (10) of this section. The primary objective of the BMPs is to prevent leaks and spills of spent pulping liquors, soap, and turpentine. The secondary objective is to contain, collect, and recover at the immediate process area, or otherwise control, those leaks, spills, and intentional diversions of spent pulping liquor, soap, and turpentine that do occur. BMPs must be developed according to best engineering practices and must be implemented in a manner that takes into account the specific circumstances at each mill. The BMPs are as follows:

(1) The mill must return spilled or diverted spent pulping liquors, soap, and turpentine to the process to the maximum extent practicable as determined by the mill, recover such materials outside the process, or discharge spilled or diverted material at a rate that does not disrupt the receiving wastewater treatment system.

(2) The mill must establish a program to identify and repair leaking equipment items. This program must include:

(i) Regular visual inspections (e.g., once per day) of process areas with equipment items in spent pulping liquor, soap, and turpentine service;

(ii) Immediate repairs of leaking equipment items, when possible. Leaking equipment items that cannot be repaired during normal operations must be identified, temporary means for mitigating the leaks must be provided, and the leaking equipment items repaired during the next maintenance outage;

(iii) Identification of conditions under which production will be curtailed or halted to repair leaking equipment items or to prevent pulping liquor, soap, and turpentine leaks and spills; and

(iv) A means for tracking repairs over time to identify those equipment items where upgrade or replacement may be warranted based on frequency and severity of leaks, spills, or failures.

(3) The mill must operate continuous, automatic monitoring systems that the mill determines are necessary to detect and control leaks, spills, and intentional diversions of spent pulping liquor, soap, and turpentine. These monitoring systems should be integrated with the mill process control system and may include, e.g., high level monitors and alarms on storage tanks; process area conductivity (or pH) monitors and alarms; and process area sewer, process wastewater, and wastewater treatment plant conductivity (or pH) monitors and alarms.

(4) The mill must establish a program of initial and refresher training of operators, maintenance personnel, and other technical and supervisory personnel who have responsibility for operating, maintaining, or supervising the operation and maintenance of equipment items in spent pulping liquor, soap, and turpentine service. The refresher training must be conducted at least annually and the training program must be documented.

(5) The mill must prepare a brief report that evaluates each spill of spent pulping liquor, soap, or turpentine that is not contained at the immediate process area and any intentional diversion of spent pulping liquor, soap, or turpentine that is not contained at the immediate process area. The report must describe the equipment items involved, the circumstances leading to

the incident, the effectiveness of the corrective actions taken to contain and recover the spill or intentional diversion, and plans to develop changes to equipment and operating and maintenance practices as necessary to prevent recurrence. Discussion of the reports must be included as part of the annual refresher training.

(6) The mill must establish a program to review any planned modifications to the pulping and chemical recovery facilities and any construction activities in the pulping and chemical recovery areas before these activities commence. The purpose of such review is to prevent leaks and spills of spent pulping liquor, soap, and turpentine during the planned modifications, and to ensure that construction and supervisory personnel are aware of possible liquor diversions and of the requirement to prevent leaks and spills of spent pulping liquors, soap, and turpentine during construction.

(7) The mill must install and maintain secondary containment (i.e., containment constructed of materials impervious to pulping liquors) for spent pulping liquor bulk storage tanks equivalent to the volume of the largest tank plus sufficient freeboard for precipitation. An annual tank integrity testing program, if coupled with other containment or diversion structures, may be substituted for secondary containment for spent pulping liquor bulk storage tanks.

(8) The mill must install and maintain secondary containment for turpentine bulk storage tanks.

(9) The mill must install and maintain curbing, diking or other means of isolating soap and turpentine processing and loading areas from the wastewater treatment facilities.

(10) The mill must conduct wastewater monitoring to detect leaks and spills, to track the effectiveness of the BMPs, and to detect trends in spent pulping liquor losses. Such monitoring must be performed in accordance with paragraph (i) of this section.

(d) *Requirement to develop a BMP Plan*. (1) Each mill subject to this section must prepare and implement a BMP Plan. The BMP Plan must be based on a detailed engineering review as described in paragraphs (d)(2) and (3) of this section. The BMP Plan must specify the procedures and the practices required for each mill to meet the requirements of paragraph (c) of this section, the construction the mill determines is necessary to meet those requirements including a schedule for such construction, and the monitoring program (including the statistically derived action levels) that will be used to meet the requirements of paragraph (i) of this section. The BMP Plan also must specify the period of time that the mill determines the action levels established under paragraph (h) of this section may be exceeded without triggering the responses specified in paragraph (i) of this section.

(2) Each mill subject to this section must conduct a detailed engineering review of the pulping and chemical recovery operations—including but not limited to process equipment, storage tanks, pipelines and pumping systems, loading and unloading facilities, and other appurtenant pulping and chemical recovery equipment items in spent pulping liquor, soap, and turpentine service—for the purpose of determining the magnitude and routing of potential leaks, spills, and intentional diversions of spent pulping liquors, soap, and turpentine during the following periods of operation:

(i) Process start-ups and shut downs;

(ii) Maintenance;

(iii) Production grade changes;

(iv) Storm or other weather events;

(v) Power failures; and

(vi) Normal operations.

(3) As part of the engineering review, the mill must determine whether existing spent pulping liquor containment facilities are of adequate capacity for collection and storage of anticipated intentional liquor diversions with sufficient contingency for collection and containment of spills. The engineering review must also consider:

(i) The need for continuous, automatic monitoring systems to detect and control leaks and spills of spent pulping liquor, soap, and turpentine;

(ii) The need for process wastewater diversion facilities to protect end-of-pipe wastewater treatment facilities from adverse effects of spills and diversions of spent pulping liquors, soap, and turpentine;

(iii) The potential for contamination of storm water from the immediate process areas; and

(iv) The extent to which segregation and/or collection and treatment of contaminated storm water from the immediate process areas is appropriate.

(e) *Amendment of BMP Plan.* (1) Each mill subject to this section must amend its BMP Plan whenever there is a change in mill design, construction, operation, or maintenance that materially affects the potential for leaks or spills of spent pulping liquor, turpentine, or soap from the immediate process areas.

(2) Each mill subject to this section must complete a review and evaluation of the BMP Plan five years after the first BMP Plan is prepared and, except as provided in paragraph (e)(1) of this section, once every five years thereafter. As a result of this review and evaluation, the mill must amend the BMP Plan within three months of the review if the mill determines that any new or modified management practices and engineered controls are necessary to reduce significantly the likelihood of spent pulping liquor, soap, and turpentine leaks, spills, or intentional diversions from the immediate process areas, including a schedule for implementation of such practices and controls.

(f) *Review and certification of BMP Plan.* The BMP Plan, and any amendments thereto, must be reviewed by the senior technical manager at the mill and approved and signed by the mill manager. Any person signing the BMP Plan or its amendments must certify to the permitting or pretreatment control authority under penalty of law that the BMP Plan (or its amendments) has been prepared in accordance with good engineering practices and in accordance with this regulation. The mill is not required to obtain approval from the permitting or pretreatment control authority of the BMP Plan or any amendments thereto.

(g) *Record keeping requirements.* (1) Each mill subject to this section must maintain on its premises a complete copy of the current BMP Plan and the records specified in paragraph (g)(2) of this section and must make such BMP Plan and records available to the permitting or pretreatment control authority and the Regional Administrator or his or her designee for review upon request.

(2) The mill must maintain the following records for 3 years from the date they are created:

(i) Records tracking the repairs performed in accordance with the repair program described in paragraph (c)(2) of this section;

(ii) Records of initial and refresher training conducted in accordance with paragraph (c)(4) of this section;

(iii) Reports prepared in accordance with paragraph (c)(5) of this section; and

(iv) Records of monitoring required by paragraphs (c)(10) and (i) of this section.

(h) *Establishment of wastewater treatment system influent action levels.* (1) Each mill subject to this section must conduct a monitoring program, described in paragraph (h)(2) of this section, for the purpose of defining wastewater treatment system influent characteristics (or action levels), described in paragraph (h)(3) of this section, that will trigger requirements to initiate investigations on BMP effectiveness and to take corrective action.

(2) Each mill subject to this section must employ the following procedures in order to develop the action levels required by paragraph (h) of this section:

(i) *Monitoring parameters.* The mill must collect 24-hour composite samples and analyze the samples for a measure of organic content (e.g., Chemical Oxygen Demand (COD) or Total Organic Carbon (TOC)). Alternatively, the mill may use a measure related to spent pulping liquor losses measured continuously and averaged over 24 hours (e.g., specific conductivity or color).

(ii) *Monitoring locations.* For direct dischargers, monitoring must be conducted at the point influent enters the wastewater treatment system. For indirect dischargers monitoring must be conducted at the point of discharge to the POTW. For the purposes of this requirement, the mill may select alternate monitoring point(s) in order to isolate possible sources of spent pulping liquor, soap, or turpentine from other possible sources of organic

wastewaters that are tributary to the wastewater treatment facilities (e.g., bleach plants, paper machines and secondary fiber operations).

(3) By the date prescribed in paragraph (j)(1)(iii) of this section, each existing discharger subject to this section must complete an initial six-month monitoring program using the procedures specified in paragraph (h)(2) of this section and must establish initial action levels based on the results of that program. A wastewater treatment influent action level is a statistically determined pollutant loading determined by a statistical analysis of six months of daily measurements. The action levels must consist of a lower action level, which if exceeded will trigger the investigation requirements described in paragraph (i) of this section, and an upper action level, which if exceeded will trigger the corrective action requirements described in paragraph (i) of this section.

(4) By the date prescribed in paragraph (j)(1)(vi) of this section, each existing discharger must complete a second six-month monitoring program using the procedures specified in paragraph (h)(2) of this section and must establish revised action levels based on the results of that program. The initial action levels shall remain in effect until replaced by revised action levels.

(5) By the date prescribed in paragraph (j)(2) of this section, each new source subject to this section must complete a six-month monitoring program using the procedures specified in paragraph (h)(2) of this section and must develop a lower action level and an upper action level based on the results of that program.

(6) Action levels developed under this paragraph must be revised using six months of monitoring data after any change in mill design, construction, operation, or maintenance that materially affects the potential for leaks or spills of spent pulping liquor, soap, or turpentine from the immediate process areas.

(i) *Monitoring, corrective action, and reporting requirements.* (1) Each mill subject to this section must conduct daily monitoring of the influent to the wastewater treatment system in accordance with the procedures described in paragraph (h)(2) of this section for the purpose of detecting leaks and spills, tracking the effectiveness of the BMPs, and detecting trends in spent pulping liquor losses.

(2) Whenever monitoring results exceed the lower action level for the period of time specified in the BMP Plan, the mill must conduct an investigation to determine the cause of such exceedance. Whenever monitoring results exceed the upper action level for the period of time specified in the BMP Plan, the mill must complete corrective action to bring the wastewater treatment system influent mass loading below the lower action level as soon as practicable.

(3) Although exceedances of the action levels will not constitute violations of an NPDES permit or pretreatment standard, failure to take the actions required by paragraph (i)(2) of this section as soon as practicable will be a permit or pretreatment standard violation.

(4) Each mill subject to this section must report to the NPDES permitting or pretreatment control authority the results of the daily monitoring conducted pursuant to paragraph (i)(1) of this section. Such reports must include a summary of the monitoring results, the number and dates of exceedances of the applicable action levels, and brief descriptions of any corrective actions taken to respond to such exceedances. Submission of such reports shall be at the frequency established by the NPDES permitting or pretreatment control authority, but in no case less than once per year.

(j) *Compliance deadlines.* (1) *Existing direct and indirect dischargers.* Except as provided in paragraph (j)(2) of this section for new sources, indirect discharging mills subject to this section must meet the deadlines set forth below. Except as provided in paragraph (j)(2) of this section for new sources, NPDES permits must require direct discharging mills subject to this section to meet the deadlines set forth below. If a deadline set forth below has passed at the time the NPDES permit containing the BMP requirement is issued, the NPDES permit must require immediate compliance with such BMP requirement(s).

(i) Prepare BMP Plans and certify to the permitting or pretreatment authority that the BMP Plan has been prepared in accordance with this regulation not later than April 15, 1999;

(ii) Implement all BMPs specified in paragraph (c) of this section that do not require the construction of containment or diversion structures or the installation of monitoring and alarm systems not later than April 15, 1999.

(iii) Establish initial action levels required by paragraph (h)(3) of this section not later than April 15, 1999.

(iv) Commence operation of any new or upgraded continuous, automatic monitoring systems that the mill determines to be necessary under paragraph (c)(3) of this section (other than those associated with construction of containment or diversion structures) not later than April 17, 2000.

(v) Complete construction and commence operation of any spent pulping liquor, collection, containment, diversion, or other facilities, including any associated continuous monitoring systems, necessary to fully implement BMPs specified in paragraph (c) of this section not later than April 16, 2001.

(vi) Establish revised action levels required by paragraph (h)(4) of this section as soon as possible after fully implementing the BMPs specified in paragraph (c) of this section, but not later than January 15, 2002.

(2) *New sources*. Upon commencing discharge, new sources subject to this section must implement all of the BMPs specified in paragraph (c) of this section, prepare the BMP Plan required by paragraph (d) of this section, and certify to the permitting or pretreatment authority that the BMP Plan has been prepared in accordance with this regulation as required by paragraph (f) of this section, except that the action levels required by paragraph (h)(5) of this section must be established not later than 12 months after commencement of discharge, based on six months of monitoring data obtained prior to that date in accordance with the procedures specified in paragraph (h)(2) of this section.

(k) The provisions of paragraphs (c) through (j) of this section do not apply to the bleached papergrade kraft mill, commonly known as the Androscoggin Mill, that is owned by International Paper and located in Jay, Maine. In lieu of imposing the requirements specified in those paragraphs, the permitting authority shall establish conditions for the discharge of COD and color for this mill on the basis of best professional judgment.

[63 FR 18635, Apr. 15, 1998, as amended at 65 FR 46108, July 27, 2000]

Subpart A—Dissolving Kraft Subcategory

§ 430.10 Applicability; description of the dissolving kraft subcategory.

The provisions of this subpart apply to discharges resulting from the production of dissolving pulp at kraft mills.

§ 430.11 Specialized definitions.

For the purpose of this subpart, the general definitions, abbreviations, and methods of analysis set forth in 40 CFR part 401 and § 430.01 of this part shall apply to this subpart.

§ 430.12 Effluent limitations representing the degree of effluent reduction attainable by the application of the best practicable control technology currently available (BPT).

(a) Except as provided in 40 CFR 125.30 through 125.32, any existing point source subject to this subpart must achieve the following effluent limitations representing the degree of effluent reduction attainable by the application of the best practicable control technology currently available (BPT), except that non-continuous dischargers shall not be subject to the maximum day and average of 30 consecutive days limitations but shall be subject to annual average effluent limitations:

SUBPART A

[BPT effluent limitations]

Pollutant or pollutant property	Kg/kkg (or pounds per 1,000 lb) of product		
	Continuous dischargers		Non-continuous dischargers
	Maximum for any 1 day	Average of daily values for 30 consecutive days	
BOD5	23.6	12.25	6.88
TSS	37.3	20.05	11.02
pH	(1)	(1)	(1)

1 Within the range of 5.0 to 9.0 at all times.

(b) The following limitations establish the quantity or quality of pollutants or pollutant properties, controlled by this section, resulting from the use of wet barking operations, which may be discharged by a point source subject to the provisions of this subpart. These limitations are in addition to the limitations set forth in paragraph (a) of this section and shall be calculated using the proportion of the mill's total production due to use of logs which are subject to such operations. Non-continuous dischargers shall not be subject to the maximum day and average of 30 consecutive days limitations, but shall be subject to annual average effluent limitations:

SUBPART A

[BPT effluent limitations]

Pollutant or pollutant property	Kg/kkg (or pounds per 1,000 lb) of product		
	Continuous dischargers		Non-continuous dischargers (annual average)
	Maximum for any 1 day	Average of daily values for 30 consecutive days	
BOD5	3.2	1.7	0.95
TSS	6.9	3.75	2.0
pH	(1)	(1)	(1)

1 Within the range of 5.0 to 9.0 at all times.

(c) The following limitations establish the quantity or quality of pollutants or pollutant parameters, controlled by this section, resulting from the use of log washing or chip washing operations, which may be discharged by a point source subject to the provisions of this subpart. These limitations are in addition to the limitations set forth in paragraph (a) of this section and shall be calculated using the proportion of the mill's total production due to use of logs and/or chips which are subject to such operations. Non-continuous dischargers shall not be subject to the maximum day and average of 30 consecutive days limitations, but shall be subject to the annual average effluent limitations:

SUBPART A

[BPT effluent limitations]

Pollutant or pollutant property	Kg/kkg (or pounds per 1,000 lb) of product		
	Continuous dischargers		Non-continuous dischargers (annual average)
	Maximum for any 1 day	Average of daily values for 30 consecutive days	
BOD5	0.35	0.2	0.1
TSS	0.70	0.4	0.2
pH	(1)	(1)	(1)

[1] Within the range of 5.0 to 9.0 at all times.

(d) The following limitations establish the quantity or quality of pollutants or pollutant properties, controlled by this section, resulting from the use of log flumes or log ponds, which may be discharged by a point source subject to the provisions of this subpart. These limitations are in addition to the limitations set forth in paragraph (a) of this section and shall be calculated using the proportion of the mill's total production due to use of logs which are subject to such operations. Non-continuous dischargers shall not be subject to the maximum day and average of 30 consecutive days limitations but shall be subject to the annual average effluent limitations:

SUBPART A

[BPT effluent limitations]

Pollutant or pollutant property	Kg/kkg (or pounds per 1,000 lb) of product		
	Continuous dischargers		Non-continuous dischargers (annual average)
	Maximum for any 1 day	Average of daily values for 30 consecutive days	
BOD5	0.6	0.35	0.2
TSS	1.45	0.8	0.4
pH	(1)	(1)	(1)

[1] Within the range of 5.0 to 9.0 at all times.

§ 430.13 Effluent limitations guidelines representing the degree of effluent reduction attainable by the application of the best conventional pollutant control technology (BCT).

Except as provided in 40 CFR 125.30 through 125.32, any existing point source subject to this subpart shall achieve the following effluent limitations representing the degree of effluent reduction attainable by the application of the best conventional pollutant control technology (BCT): The limitations shall be the same as those specified for conventional pollutants (which are defined in 40 CFR 401.16) in § 430.12 of this subpart for the best practicable control technology currently available (BPT).

§ 430.14 Effluent limitations representing the degree of effluent reduction attainable by the application of the best available technology economically achievable (BAT).

Except as provided in 40 CFR 125.30 through 125.32, any existing point source subject to this subpart where chlorophenolic-containing biocides are used must achieve the following effluent limitations representing the degree of effluent reduction attainable by the application of the best available technology economically achievable (BAT). Non-continuous dischargers shall not

be subject to the maximum day mass limitations in kg/kkg (lb/1000 lb) but shall be subject to concentration limitations. Concentration limitations are only applicable to non-continuous dischargers. Permittees not using chlorophenolic-containing biocides must certify to the permit-issuing authority that they are not using these biocides:

SUBPART A

[BAT effluent limitations]

Pollutant or pollutant property	Maximum for any 1 day	
	Kg/kkg (or pounds per 1,000 lb) of product	Milligrams/liter
Pentachlorophenol	0.0025	(0.011)(55.1)/y
Trichlorophenol	0.016	(0.068)(55.1)/y
y = wastewater discharged in kgal per ton of product.		

§ 430.15 New source performance standards (NSPS).

Any new source subject to this subpart must achieve the following new source performance standards (NSPS), except that non-continuous dischargers shall not be subject to the maximum day and average of 30 consecutive days effluent limitations for BOD5 and TSS, but shall be subject to annual average effluent limitations. Also, for non-continuous dischargers, concentration limitations (mg/l) shall apply, where provided. Concentration limitations will only apply to non-continuous dischargers. Only facilities where chlorophenolic-containing biocides are used shall be subject to pentachlorophenol and trichlorophenol limitations. Permittees not using chlorophenolic-containing biocides must certify to the permit-issuing authority that they are not using these biocides:

SUBPART A

[NSPS]

Pollutant or pollutant property	Kg/kkg (or pounds per 1,000 lb) of product		
	Continuous dischargers		Non-continuous dischargers (annual average)
	Maximum for any 1 day	Average of daily values for 30 consecutive days	
BOD5	15.6	8.4	4.4
TSS	27.3	14.3	7.5
pH	(1)	(1)	(1)

	Maximum for any 1 day	
	Kg/kkg (or pounds per 1,000 lb) of product	Milligrams/liter
Pentachlorophenol	0.0025	(0.012)(50.7)/y
Trichlorophenol	0.016	(0.074)(50.7)/y
y = wastewater discharged in kgal per ton at all times.		

[1] Within the range of 5.0 to 9.0 at all times.

§ 430.16 Pretreatment standards for existing sources (PSES).

Except as provided in 40 CFR 403.7 and 403.13, any existing source subject to this subpart that introduces pollutants into a publicly owned treatment works must: comply with 40 CFR part 403; and achieve the following

pretreatment standards for existing sources (PSES) if it uses chlorophenolic-containing biocides. Permittees not using chlorophenolic-containing biocides must certify to the permit-issuing authority that they are not using these biocides. PSES must be attained on or before July 1, 1984:

SUBPART A

[PSES]

Pollutant or pollutant property	Maximum for any 1 day	
	Milligrams/liter (mg/l)	Kg/kkg (or pounds per 1,000 lb) of product [a]
Pentachlorophenol	(0.011)(55.1)/y	0.0025
Trichlorophenol	(0.082)(55.1)/y	0.019
y = wastewater discharged in kgal per ton of product.		

[a] The following equivalent mass limitations are provided as guidance in cases when POTWs find it necessary to impose mass effluent limitations.

§ 430.17 Pretreatment standards for new sources (PSNS).

Except as provided in 40 CFR 403.7, any new source subject to this subpart that introduces pollutants into a publicly owned treatment works must: comply with 40 CFR part 403; and achieve the following pretreatment standards for new sources (PSNS) if it uses chlorophenolic-containing biocides. Permittees not using chlorophenolic-containing biocides must certify to the permit-issuing authority that they are not using these biocides:

SUBPART A

[PSNS]

Pollutant or pollutant property	Maximum for any 1 day	
	Milligrams/liter (mg/l)	Kg/kkg (or pounds per 1,000 lb) of product [a]
Pentachlorophenol	(0.012)(50.7)/y	0.0025
Trichlorophenol	(0.089)(50.7)/y	0.019
y = wastewater discharged in kgal per ton of product.		

[a] The following equivalent mass limitations are provided as guidance in cases when POTWs find it necessary to impose mass effluent limitations.

Subpart B—Bleached Papergrade Kraft and Soda Subcategory

§ 430.20 Applicability; description of the bleached papergrade kraft and soda subcategory.

The provisions of this subpart apply to discharges resulting from: The production of market pulp at bleached kraft mills; the integrated production of paperboard, coarse paper, and tissue paper at bleached kraft mills; the integrated production of pulp and fine papers at bleached kraft mills; and the integrated production of pulp and paper at soda mills.

§ 430.21 Specialized definitions.

(a) The general definitions, abbreviations, and methods of analysis set forth in 40 CFR part 401 and § 430.01 of this part apply to this subpart.

(b) *Baseline BAT limitations or NSPS* means the BAT limitations specified in § 430.24(a) (1) or (2), as applicable, and the NSPS specified in § 430.25(b) (1) or (2), as applicable, that apply to any direct discharger that is not ''enrolled'' in the ''Voluntary Advanced Technology Incentives Program.''

(c) *Enroll* means to notify the permitting authority that a mill intends to participate in the ''Voluntary Advanced Technology Incentives Program.'' A mill can enroll by indicating

its intention to participate in the program either as part of its application for a National Pollutant Discharge Elimination System (NPDES) permit, or through separate correspondence to the permitting authority as long as the mill signs the correspondence in accordance with 40 CFR 122.22.

(d) *Existing effluent quality* means the level at which the pollutants identified in § 430.24(a)(1) are present in the effluent of a mill ''enrolled'' in the ''Voluntary Advanced Technology Incentives Program.''

(e) *Kappa number* is a measure of the lignin content in unbleached pulp, determined after pulping and prior to bleaching.

(f) *Voluntary Advanced Technology Incentives Program* is the program established under § 430.24(b) (for existing direct dischargers) and § 430.25(c) (for new direct dischargers) whereby participating mills agree to accept enforceable effluent limitations and conditions in their NPDES permits that are more stringent than the ''baseline BAT limitations or NSPS'' that would otherwise apply, in exchange for regulatory- and enforcement-related rewards and incentives.

§ 430.22 Effluent limitations representing the degree of effluent reduction attainable by the application of the best practicable control technology currently available (BPT).

(a) Except as provided in 40 CFR 125.30 through 125.32, any existing point source subject to this subpart must achieve the following effluent limitations representing the degree of effluent reduction attainable by the application of the best practicable control technology currently available (BPT):

SUBPART B

[BPT effluent limitations for bleached kraft facilities where market pulp is produced]

Pollutant or pollutant parameter	Kg/kkg (or pounds per 1,000 lb) of product		
	Continuous dischargers		Non-continuous dischargers (annual average)
	Maximum for any 1 day	Average of daily values for 30 consecutive days	
BOD5	15.45	8.05	4.52
TSS	30.4	16.4	9.01
pH	(1)	(1)	(1)

[1] Within the range of 5.0 to 9.0 at all times.

SUBPART B

[BPT effluent limitations for bleached kraft facilities where paperboard, coarse paper, and tissue paper are produced]

Pollutant or pollutant parameter	Kg/kkg (or pounds per 1,000 lb) of product		
	Continuous dischargers		Non-continuous dischargers (annual average)
	Maximum for any 1 day	Average of daily values for 30 consecutive days	
BOD5	13.65	7.1	3.99
TSS	24.0	12.9	7.09
pH	(1)	(1)	(1)

[1] Within the range of 5.0 to 9.0 at all times.

SUBPART B

[BPT effluent limitations for bleached kraft facilities where pulp and fine papers are produced]

Pollutant or pollutant parameter	Kg/kkg (or pounds per 1,000 lb) of product		
	Continuous dischargers		Non-continuous dischargers (annual average)
	Maximum for any 1 day	Average of daily values for 30 consecutive days	
BOD5	10.6	5.5	3.09
TSS	22.15	11.9	6.54
pH	(1)	(1)	(1)

1 Within the range of 5.0 to 9.0 at all times.

SUBPART B

[BPT effluent limitations for soda facilities where pulp and paper are produced]

Pollutant or pollutant parameter	Kg/kkg (or pounds per 1,000 lb) of product		
	Continuous dischargers		Non-continuous dischargers (annual average)
	Maximum for any 1 day	Average of daily values for 30 consecutive days	
BOD5	13.7	7.1	3.99
TSS	24.5	13.2	7.25
pH	(1)	(1)	(1)

1 Within the range of 5.0 to 9.0 at all times.

(b) The following limitations establish the quantity or quality of pollutants or pollutant properties, controlled by this section, resulting from the use of wet barking operations, which may be discharged by a point source subject to the provisions of this subpart. These limitations are in addition to the limitations set forth in paragraph (a) of this section and shall be calculated using the proportion of the mill's total production due to use of logs which are subject to such operations:

SUBPART B

[BPT effluent limitations for bleached kraft facilities where market pulp is produced]

Pollutant or pollutant parameter	Kg/kkg (or pounds per 1,000 lb) of product		
	Continuous dischargers		Non-continuous dischargers (annual average)
	Maximum for any 1 day	Average of daily values for 30 consecutive days	
BOD5	2.3	1.2	0.70
TSS	5.3	2.85	1.55
pH	(1)	(1)	(1)

1 Within the range of 5.0 to 9.0 at all times.

SUBPART B

[BPT effluent limitations for bleached kraft facilities where paperboard, coarse paper, and tissue paper are produced]

Pollutant or pollutant parameter	Kg/kkg (or pounds per 1,000 lb) of product		
	Continuous dischargers		Non-continuous dischargers (annual average)
	Maximum for any 1 day	Average of daily values for 30 consecutive days	
BOD5	2.25	1.2	0.65
TSS	5.75	3.1	1.70
pH	(1)	(1)	(1)

[1] 1 Within the range of 5.0 to 9.0 at all times.

SUBPART B

[BPT effluent limitations for bleached kraft facilities where pulp and fine papers are produced]

Pollutant or pollutant parameter	Kg/kkg (or pounds per 1,000 lb) of product		
	Continuous dischargers		Non-continuous dischargers (annual average)
	Maximum for any 1 day	Average of daily values for 30 consecutive days	
BOD5	1.95	1.0	0.55
TSS	5.3	2.85	1.55
pH	(1)	(1)	(1)

[1] Within the range of 5.0 to 9.0 at all times.

SUBPART B

[BPT effluent limitations for soda facilities where pulp and papers are produced]

Pollutant or pollutant parameter	Kg/kkg (or pounds per 1,000 lb) of product		
	Continuous dischargers		Non-continuous dischargers (annual average)
	Maximum for any 1 day	Average of daily values for 30 consecutive days	
BOD5	2.05	1.1	0.60
TSS	5.25	2.8	1.55
pH	(1)	(1)	(1)

[1] Within the range of 5.0 to 9.0 at all times.

(c) The following limitations establish the quantity or quality of pollutants or pollutant parameters, controlled by this section, resulting from the use of log washing or chip washing operations, which may be discharged by a point source subject to the provisions of this subpart. These limitations are in addition to the limitations set forth in paragraph (a) of this section and shall be calculated using the proportion of the mill's total production due to use of logs and/or chips which are subject to such operations:

SUBPART B

[BPT effluent limitations for bleached kraft facilities where market pulp is produced]

Pollutant or pollutant parameter	Kg/kkg (or pounds per 1,000 lb) of product		
	Continuous dischargers		Non-continuous dischargers (annual average)
	Maximum for any 1 day	Average of daily values for 30 consecutive days	
BOD5	0.2	0.1	0.1
TSS	0.6	0.3	0.15
pH	(1)	(1)	(1)

1 Within the range of 5.0 to 9.0 at all times..

SUBPART B

[BPT effluent limitations for bleached kraft facilities where paperboard, coarse paper, and tissue paper are produced]

Pollutant or pollutant parameter	Kg/kkg (or pounds per 1,000 lb) of product		
	Continuous dischargers		Non-continuous dischargers (annual average)
	Maximum for any 1 day	Average of daily values for 30 consecutive days	
BOD5	0.25	0.15	0.05
TSS	0.65	0.35	0.20
pH	(1)	(1)	(1)

1 Within the range of 5.0 to 9.0 at all times.

SUBPART B

[BPT effluent limitations for bleached kraft facilities where pulp and fine papers are produced]

Pollutant or pollutant parameter	Kg/kkg (or pounds per 1,000 lb) of product		
	Continuous dischargers		Non-continuous dischargers (annual average)
	Maximum for any 1 day	Average of daily values for 30 consecutive days	
BOD5	0.2	0.1	0.05
TSS	0.55	0.3	0.15
pH	(1)	(1)	(1)

1 Within the range of 5.0 to 9.0 at all times.

SUBPART B

[BPT effluent limitations for soda facilities where pulp and papers are produced]

Pollutant or pollutant parameter	Kg/kkg (or pounds per 1,000 lb) of product		
	Continuous dischargers		Non-continuous dischargers (annual average)
	Maximum for any 1 day	Average of daily values for 30 consecutive days	
BOD5	0.15	0.1	0.05
TSS	0.5	0.25	0.15
pH	(1)	(1)	(1)

1 Within the range of 5.0 to 9.0 at all times.

(d) The following limitations establish the quantity or quality of pollutants or pollutant properties, controlled by this section, resulting from the use of log flumes or log ponds, which may be discharged by a point source subject to the provisions of this subpart. These limitations are in addition to the limitations set forth in paragraph (a) of this section and shall be calculated using the proportion of the mill's total production due to use of logs which are subject to such operations:

SUBPART B

[BPT effluent limitations for bleached kraft facilities where market pulp is produced]

Pollutant or pollutant parameter	Kg/kkg (or pounds per 1,000 lb) of product		
	Continuous dischargers		Non-continuous dischargers (annual average)
	Maximum for any 1 day	Average of daily values for 30 consecutive days	
BOD5	0.4	0.2	0.15
TSS	1.15	0.6	0.35
pH	(1)	(1)	(1)

[1] Within the range of 5.0 to 9.0 at all times.

SUBPART B

[BPT effluent limitations for bleached kraft facilities where paperboard, coarse paper, and tissue paper are produced]

Pollutant or pollutant parameter	Kg/kkg (or pounds per 1,000 lb) of product		
	Continuous dischargers		Non-continuous dischargers (annual average)
	Maximum for any 1 day	Average of daily values for 30 consecutive days	
BOD5	0.45	0.25	0.10
TSS	1.25	0.7	0.35
pH	(1)	(1)	(1)

[1] Within the range of 5.0 to 9.0 at all times.

SUBPART B

[BPT effluent limitations for bleached kraft facilities where pulp and fine papers are produced]

Pollutant or pollutant parameter	Kg/kkg (or pounds per 1,000 lb) of product		
	Continuous dischargers		Non-continuous dischargers (annual average)
	Maximum for any 1 day	Average of daily values for 30 consecutive days	
BOD5	0.35	0.2	0.10
TSS	1.15	0.6	0.30
pH	(1)	(1)	(1)

[1] Within the range of 5.0 to 9.0 at all times.

SUBPART B

[BPT effluent limitations for soda facilities where pulp and papers are produced]

Pollutant or pollutant parameter	Kg/kkg (or pounds per 1,000 lb) of product		
	Continuous dischargers		Non-continuous dischargers (annual average)
	Maximum for any 1 day	Average of daily values for 30 consecutive days	
BOD5	0.3	0.2	0.10
TSS	1.1	0.55	0.35
pH	(1)	(1)	(1)

[1]Within the range of 5.0 to 9.0 at all times.

§ 430.23 Effluent limitations representing the degree of effluent reduction attainable by the application of the best conventional pollutant control technology (BCT).

Except as provided in 40 CFR 125.30 through 125.32, any existing point source subject to this subpart must achieve the following effluent limitations representing the degree of effluent reduction attainable by the application of the best conventional pollutant control technology (BCT). The limitations shall be the same as those specified in § 430.22 of this subpart for the best practicable control technology currently available (BPT).

§ 430.24 Effluent limitations representing the degree of effluent reduction attainable by the application of best available technology economically achievable (BAT).

Except as provided in 40 CFR 125.30 through 125.32, any existing point source subject to this subpart must achieve the following effluent limitations representing the degree of effluent reduction attainable by the application of the best available technology economically achievable (BAT).

(a) Except as provided in paragraph (b) of this section—

(1) The following effluent limitations apply with respect to each fiber line that does not use an exclusively TCF bleaching process, as disclosed by the discharger in its NPDES permit application under 40 CFR 122.21(g)(3) and certified under 40 CFR 122.22:

SUBPART B

Pollutant or pollutant property	BAT effluent limitations	
	Maximum for any 1 day	Monthly average
TCDD	<ML [a]	([b])
TCDF	31.9 [c]	([b])
Chloroform	6.92 [d]	4.14 ([d])
Trichlorosyringol	<ML [a]	([b])
3,4,5-trichlorocatechol	<ML [a]	([b])
3,4,6-trichlorocatechol	<ML [a]	([b])
3,4,5-trichloroguaiacol	<ML [a]	([b])
3,4,6-trichloroguaiacol	<ML [a]	([b])
4,5,6-trichloroguaiacol	<ML [a]	([b])
2,4,5-trichlorophenol	<ML [a]	([b])
2,4,6-trichlorophenol	<ML [a]	([b])
Tetrachlorocatechol	<ML [a]	([b])
Tetrachloroguaiacol	<ML [a]	([b])
2,3,4,6-tetrachlorophenol	<ML [a]	([b])
Pentachlorophenol	<ML [a]	([b])

	Continuous dischargers		Non-continuous dischargers
	Maximum for any 1 day (kg/kkg)	Monthly average (kg/kkg)	Annual average (kg/kkg)
AOX	0.951	0.623	0.512
COD	([e])	([e])	([e])

[a] "<ML" means less than the minimum level specified in § 430.01(i) for the particular pollutant.
[b] This regulation does not specify this type of limitation for this pollutant; however, permitting authorities may do so as appropriate.
[c] Picograms per liter.
[d] Grams per 1,000 kilograms (g/kkg).
[e] [Reserved]

(2) The following effluent limitations apply with respect to each fiber line that uses exclusively TCF bleaching processes, as disclosed by the discharger in its NPDES permit application under 40 CFR 122.21(g)(3) and certified under 40 CFR 122.22:

SUBPART B

Pollutant or pollutant property	BAT effluent limitations (TCF)			
	Continuous dischargers		Non-continuous dischargers	
	Maximum for any 1 day	Monthly average	Maximum for any 1 day	Annual average
AOX	<ML [a]	([b])	<ML [a]	([b])
COD	([c])	([c])	([c])	([c])

[a] "<ML" means less than the minimum level specified in § 430.01(i) for the particular pollutant.
[b] This regulation does not specify this type of limitation for this pollutant; however, permitting authorities may do so as appropriate.
[c] [Reserved]

(b) The following limitations apply with respect to each fiber line enrolled in the Voluntary Advanced Technology Incentives Program:

(1) Stage 1 Limitations: Numeric limitations that are equivalent to the discharger's existing effluent quality or the discharger's current effluent limitations established under CWA section 301(b)(2), whichever are more stringent, for the pollutants identified in paragraph (a)(1) of this section (with the exception of COD). For AOX, the permitting authority must determine existing effluent quality for each fiber line enrolled in the Voluntary Advanced Technology Incentives Program at the end of the pipe based on loadings attributable to that fiber line. For the remaining pollutants, with the exception of COD, the permitting authority must determine existing effluent quality for each fiber line enrolled in the Voluntary Advanced Technology Incentives Program at the point where the wastewater containing those pollutants leaves the bleach plant. These limitations must be recalculated each time the NPDES permit of a discharger enrolled in the Voluntary Advanced Technology Incentives Program is reissued, up to:

(i) April 15, 2004 for all pollutants in paragraph (a)(1) of this section except AOX; and

(ii) The date specified in paragraph (b)(4)(ii) of this section for achieving the applicable AOX limitation specified in paragraph (b)(4)(i).

(2) Best Professional Judgment Milestones: Narrative or numeric limitations and/or special permit conditions, as appropriate, established by the permitting authority on the basis of his or her best professional judgment that reflect reasonable interim milestones toward achievement of the effluent limitations specified in paragraphs (b)(3) and (b)(4) of this section, as applicable, after consideration of the Milestones

Plan submitted by the discharger in accordance with paragraph (c) of this section.

(3) Six-year Milestones: By April 15, 2004 all dischargers enrolled in the Voluntary Advanced Technology Incentives Program must achieve the following:

(i) The effluent limitations specified in paragraph (a)(1) of this section, except that, with respect to AOX, dischargers subject to Tier I effluent limitations specified in paragraph (b)(4)(i) of this section must achieve the AOX limitation specified in that paragraph; or

(ii) For dischargers that use exclusively TCF bleaching processes as of April 15, 2004, the effluent limitations specified in paragraph (a)(2) of this section.

(4)(i) Stage 2 Limitations:

ULTIMATE VOLUNTARY ADVANCED TECHNOLOGY INCENTIVES PROGRAM BAT LIMITATIONS

Tier	Kappa number (annual average)	Filtrate recycling	Total pulping area condensate, evaporator condensate, and bleach plant wastewater flow (annual average)	AOX (kg/kkg)			
				Non-TCF [a]		TCF	
				Maximum for any 1 day	Annual average	Maximum for any 1 day	Annual average
Tier I	20 (softwood furnish) 13 (Hardwood furnish)	([b])	N/A	0.58	0.26	<ML [c]	([d])
Tier II	NA	([b])	10 cubic meters/kkg	0.23	0.10	<ML [c]	([d])
Tier III	N/A	([b])	5 cubic meters/kkg	0.11	0.05	<ML [c]	([d])

[a] Non-TCF: Pertains to any fiber line that does not use exclusively TCF bleaching processes.
[b] Complete recycling to the chemical recovery system of all filtrates generated prior to bleaching. Under Tier I, this includes all filtrates up to the point where kappa number is measured.
[c] ''<ML'' means less than the minimum level specified in § 430.01(i) for the particular pollutant.
[d] This regulation does not specify this type of limitation for this pollutant; however, permitting authorities may do so as appropriate.
N/A means ''not applicable.''

(ii) Deadlines.

(A) A discharger enrolled in Tier I of the Voluntary Advanced Technology Incentives Program must achieve the Tier I limitations in paragraph (b)(4)(i) of this section by April 15, 2004.

(B) A discharger enrolled in Tier II of the Voluntary Advanced Technology Incentives Program must achieve the Tier II limitations in paragraph (b)(4)(i) of this section by April 15, 2009.

(C) A discharger enrolled in Tier III of the Voluntary Advanced Technology Incentives Program must achieve the Tier III limitations in paragraph (b)(4)(i) of this section by April 15, 2014.

(c) All dischargers enrolled or intending to enroll in the Voluntary Advanced Technology Incentives Program must submit to the NPDES permitting authority a Milestones Plan covering all fiber lines enrolled or intended to be enrolled in that program at their mill by October 5, 1999 or the date the discharger applies for an NPDES permit containing limitations and conditions based on paragraph (b) of this section, whichever is later. Mills may claim all or part of the Milestones Plan as confidential business information (CBI) in accordance with 40 CFR Part 2 and 40 CFR 122.7. If a mill claims all or part of the plan as CBI, the mill must prepare and submit to the NPDES permitting authority a summary of the plan for public release. The Milestones Plan must include the following information:

(1) A description of each anticipated new technology component or process modification that the discharger intends to implement in order to achieve the limitations in paragraphs (b)(3) and (b)(4) of this section;

(2) A master schedule showing the sequence of implementing the new technology components or process modifications and identifying critical path relationships within the sequence;

(3) A schedule for each individual new technology component or process modification that includes:

(i) The anticipated initiation and completion dates of construction, installation and operational ''shakedown'' period associated with the technology components or process modifications and, when applicable, the anticipated dates of initiation and completion of associated research, process development, and mill trials;

(ii) The anticipated dates that the discharger expects the technologies and process modifications selected to achieve the limitations specified in paragraphs (b)(3) and (b)(4) of this section to be operational on a full-scale basis; and

(iii) The anticipated magnitude of reductions in effluent quantity and the anticipated improvements in effluent quality associated with each technology and process modification implemented as measured at the bleach plant (for bleach plant, pulping area and evaporator condensates flow and BAT parameters other than Adsorbable Organic Halides (AOX)) and at the end of the pipe (for AOX), and the dates the discharger expects those reductions and improvements to be achieved;

(4) Contingency plans in the event that any technology or process specified in the Milestones Plan need to be adjusted or alternative approaches developed to ensure that the limitations specified in paragraphs (b)(3)and (b)(4) of this section are met; and

(5) A signature by the responsible corporate officer as defined in 40 CFR 122.22.

(d) The following additional effluent limitations apply to all dischargers subject to this section in accordance with the previous subcategorization scheme unless the discharger certifies to the permitting authority that it is not using these compounds as biocides. Also, for non-continuous dischargers, concentration limitations (mg/l) shall apply. Concentration limitations will only apply to non-continuous dischargers:

SUBPART B

[Supplemental BAT effluent limitations for bleached kraft facilities where market pulp is produced]

Pullutant or pollutant property	Maximum for any 1 day	
	kg/kkg (or pounds per 1,000 lb) of product	Milligrams/liter
Pentachlorophenol	0.0019	(0.011)(41.6)/y
Trichlorophenol	0.012	(0.068)(41.6)/y
y = wastewater discharged in kgal per ton product.		

SUBPART B

[Supplemental BAT effluent limitations for bleached kraft facilities where paperboard, coarse paper, and tissue paper are produced]

Pollutant or pollutant property	Maximun for any 1 day	
	kg/kkg (or pounds per 1,000 lb) of product	Milligrams/liter
Pentachlorophenol	0.0016	(0.11)(35.4)/y
Trichlorophenol	0.010	(0.068)(35.4)/y
y = wastewater discharged in kgal per ton of product.		

SUBPART B

[Supplemental BAT effluent limitations for bleached kraft facilities where pulp and fine papers are produced and soda facilities where pulp and paper are produced]

Pollutant or pollutant property	Maximum for any 1 day	
	kg/kkg (or pounds per 1,000 lb) of product	Milligrams/liter
Pentachlorophenol	0.0014	(0.011) (30.9)/y
Trichlorophenol	0.0088	(0.068) (30.9)/y
y = wastewater discharged in kgal per ton of product.		

(e) Pursuant to 40 CFR 122.44(i) and 122.45(h), a discharger must demonstrate compliance with the effluent limitations in paragraph (a)(1) or (b)(3) of this section, as applicable, by monitoring for all pollutants (except for AOX and COD) at the point where the wastewater containing those pollutants leaves the bleach plant. The permitting authority may impose effluent limitations and/or monitoring requirements on internal wastestreams for any other pollutants covered in this section as appropriate under 40 CFR 122.44(i) and 122.45(h). In addition, a discharger subject to a limitation on total pulping area condensate, evaporator condensate, and bleach plant wastewater flow under paragraph (b)(4)(i) of this section, for Tier II and Tier III, must demonstrate compliance with that limitation by establishing and maintaining flow measurement equipment to monitor these flows at the point or points where they leave the pulping area, evaporator area, and bleach plant.

[63 FR 18635, Apr. 15, 1998; 63 FR 42239, Aug. 7, 1998, as amended at 64 FR 36586, July 7, 1999]

§ 430.25 New source performance standards (NSPS).

New sources subject to this subpart must achieve the following new source performance standards (NSPS), as applicable.

(a) The following standards apply to each new source that commenced discharge after June 15, 1988 and before June 15, 1998, provided that the new source was constructed to meet these standards:

SUBPART B

[1982 New Source Performance Standards for bleached kraft facilities where market pulp is produced]

Pollutant or pollutant property	Continuous dischargers		Non-continuous dischargers
	Maximum for any 1 day	Average of daily values for 30 consecutive days	Annual average
BOD5	10.3	5.5	2.88
TSS	18.2	9.5	5.00
pH	(1)	(1)	(1)

1 Within the range of 5.0 to 9.0 at all times.

SUBPART B

[1982 New Source Performance Standards for bleached kraft facilities where paperboard, coarse paper, and tissue paper are produced]

Pollutant or pollutant property	Continuous dischargers		Non-continuous dischargers
	Maximum for any 1 day	Average of daily values for 30 consecutive days	Annual average
BOD5	8.5	4.6	2.41
TSS	14.6	7.6	4.00
pH	(1)	(1)	(1)

1 Within the range of 5.0 to 9.0 at all times.

SUBPART B

[1982 New Source Performance Standards for bleached kraft facilities where pulp and fine papers are produced and soda facilities where pulp and paper are produced]

Pollutant or pollutant property	Continuous dischargers		Non-continuous dischargers
	Maximum for any 1 day	Average of daily values for 30 consecutive days	Annual average
BOD5	5.7	3.1	1.62
TSS	9.1	4.8	2.53
pH	(1)	(1)	(1)

1 Within the range of 5.0 to 9.0 at all times.

(b) Except as provided in paragraph (c) of this section—

(1) The following standards apply with respect to each new source fiber line that does not use an exclusively TCF bleaching process, as disclosed by the discharger in its NPDES permit application under 40 CFR 122.21(g)(3) and certified under 40 CFR 122.22, and that commences discharge after June 15, 1998:

SUBPART B

Pollutant or pollutant property	NSPS	
	Maximum for any 1 day	Monthly average
TCDD	<ML [a]	([b])
TCDF	31.9 [c]	([b])
Chloroform	6.92 [d]	4.14 [d]
Trichlorosyringol	<ML [a]	([b])
3,4,5-trichlorocatechol	<ML [a]	([b])
3,4,6-trichlorocatechol	<ML [a]	([b])
3,4,5-trichloroguaiacol	<ML [a]	([b])
3,4,6-trichloroguaiacol	<ML [a]	([b])
4,5,6-trichloroguaiacol	<ML [a]	([b])
2,4,5-trichlorophenol	<ML [a]	([b])
2,4,6-trichlorophenol	<ML [a]	([b])
Tetrachlorocatechol	<ML [a]	([b])
Tetrachloroguaiacol	<ML [a]	([b])
2,3,4,6-tetrachlorophenol	<ML [a]	([b])
Pentachlorophenol	<ML [a]	([b])

	Continuous dischargers		Non-continuous dischargers
	Maximum for any 1 day (kg/kkg)	Monthly average (kg/kkg)	Annual average (kg/kkg)
AOX	0.476	0.272	0.208
BOD5	4.52	2.41	1.73
TSS	8.47	3.86	2.72
pH	([1])	([1])	([1])
COD	([e])	([e])	([e])

[a] "<ML" means less than the minimum level specified in § 430.01(i) for the particular pollutant.
[b] This regulation does not specify this type of limitation for this pollutant; however, permitting authorities may do so as appropriate.
[c] Picograms per liter.
[d] Grams per 1,000 kilograms(g/kkg).
[e] [Reserved]
[1] Within the range of 5.0 to 9.0 at all times.

(2) The following standards apply with respect to each new source fiber line that uses exclusively TCF bleaching processes, as disclosed by the discharger in its NPDES permit application under 40 CFR 122.21(g)(3) and certified under 40 CFR 122.22, and that commences discharge after June 15, 1998:

SUBPART B

Pollutant or pollutant property	NSPS (TCF)			
	Continuous dischargers		Non-continuous dischargers	
	Maximum for any 1 day	Monthly average	Maximum for any 1 day	Annual average
AOX	<ML [a]	([b])	<ML [a]	([b])
BOD5	4.52 [d]	2.41	N/A	1.73
TSS	8.47 [d]	3.86	N/A	2.72
pH	([1])	([1])	([1])	([1])
COD	([c])	([c])	([c])	([c])

[a] "<ML" means less than the minimum level specified in § 430.01(i) for the particular pollutant.
[b] This regulation does not specify this type of limitation for this pollutant; however, permitting authorities may do so as appropriate.
[c] [Reserved]
[d] Kilograms per 1,000 kilograms (kg/kkg).
[1] Within the range of 5.0 to 9.0 at all times.

(c) With respect to each new source fiber line that is enrolled in the Voluntary Advanced Technology Incentives Program, dischargers subject to this section must achieve:

(1) The standards specified in paragraph (b)(1) of this section (except for AOX) or paragraph (b)(2) of this section, as applicable; and

(2) Standards for filtrates, flow, and AOX:

ULTIMATE VOLUNTARY ADVANCED TECHNOLOGY INCENTIVES PROGRAM NSPS

Tier	Filtrate recycling	Total pulping area condensate, evaporator condensate, and bleach plant wastewater flow (annual average)	AOX (kg/kkg)			
			Non-TCF [a]		TCF	
			Maximum for any 1 day	Annual average	Maximum for any 1 day	Annual average
Tier II	([b])	10 cubic meters/kkg	0.23	0.10	<ML [c]	([d])
Tier III	([b])	5 cubic meters/kkg	0.11	0.05	<ML [c]	([d])

[a] Non-TCF: Pertains to any fiber line that does not use exclusively TCF bleaching processes.
[b] Complete recycling to the chemical recovery system of all filtrates generated prior to bleaching.
[c] "<ML" means less than the minimum level specified in § 430.01(i) for the particular pollutant.
[d] This regulation does not specify this type of limitation for this pollutant; however, permitting authorities may do so as appropriate.

(d) These additional standards apply to all new sources, regardless of when they commenced discharge, in accordance with the previous subcategorization scheme unless the discharger certifies to the permitting authority that it is not using these compounds as biocides. Also, for non-continuous dischargers, concentration limitations (mg/l) shall apply. Concentration limitations will only apply to non-continuous dischargers:

SUBPART B

[Supplemental NSPS for bleached kraft facilities where market pulp is produced]

Pollutant or pollutant property	Maximum for any 1 day	
	kg/kkg (or pounds per 1,000 lb) of product	Milligrams/liter
Pentachlorophenol	0.0019	(0.013)(36.6)/y
Trichlorophenol	0.012	(0.077)(36.6)/y
y = wastewater discharged in kgal per ton of product.		

SUBPART B

[Supplemental NSPS for bleached kraft facilities where paperboard, coarse paper, and tissue paper are produced]

Pollutant or pollutant property	Maximum for any 1 day	
	kg/kkg (or pounds per 1,000 lb) of product	Milligrams/liter
Pentachlorophenol	0.0016	(0.012)(31.7)/y
Trichlorophenol	0.010	(0.076)(31.7)/y
y = wastewater discharged in kgal per ton of product.		

SUBPART B

[Supplemental NSPS for bleached kraft facilities where pulp and fine papers are produced and soda facilities where pulp and paper are produced]

Pollutant or pollutant property	Maximum for any 1 day	
	kg/kkg (or pounds per 1,000 lb) of product	Milligrams/liter
Pentachlorophenol	0.0014	(0.014)(25.1)/y
Trichlorophenol	0.0088	(0.084)(25.1)/y
y = wastewater discharged in kgal per ton of product.		

(e) Pursuant to 40 CFR 122.44(i) and 122.45(h), a discharger must demonstrate compliance with the limitations in paragraph (b)(1) or (c)(1) of this section, as applicable, by monitoring for all pollutants (except for AOX, COD, BOD5, TSS, and pH) at the point where the wastewater containing those pollutants leaves the bleach plant. The permitting authority may impose effluent limitations and/or monitoring requirements on internal wastestreams for any other pollutants covered in this section as appropriate under 40 CFR 122.44(i) and 122.45(h). In addition, a discharger subject to a limitation on total pulping area condensate, evaporator condensate, and bleach plant wastewater flow under paragraph (c)(2) of this section must demonstrate compliance with that limitation by establishing and maintaining flow measurement equipment monitoring these flows at the point or points where they leave the pulping area, evaporator area, and the bleach plant.

[63 FR 18635, Apr. 15, 1998; 63 FR 42239, Aug. 7, 1998]

§ 430.26 Pretreatment standards for existing sources (PSES).

Except as provided in 40 CFR 403.7 and 403.13, any existing source subject to this subpart that introduces pollutants into a publicly owned treatment works must comply with 40 CFR part 403 and must achieve the following pretreatment standards for existing sources (PSES).

(a)(1) The following pretreatment standards apply with respect to each fiber line operated by an indirect discharger subject to this section, unless the indirect discharger discloses to the pretreatment control authority in a report submitted under 40 CFR 403.12(b) that it uses exclusively TCF bleaching processes at that fiber line. These pretreatment standards must be attained on or before April 16, 2001:

SUBPART B

Pollutant or pollutant property	PSES	
	Maximum for any 1 day	Monthly average
TCDD	<ML [a]	([b])
TCDF	31.9 [c]	([b])
Chloroform	6.92 [d]	[d] 4.14
Trichlorosyringol	<ML [a]	([b])
3,4,5-trichlorocatechol	<ML [a]	([b])
3,4,6-trichlorocatechol	<ML [a]	([b])
3,4,5-trichloroguaiacol	<ML [a]	([b])
3,4,6-trichloroguaiacol	<ML [a]	([b])
4,5,6-trichloroguaiacol	<ML [a]	([b])
2,4,5-trichlorophenol	<ML [a]	([b])
2,4,6-trichlorophenol	<ML [a]	([b])
Tetrachlorocatechol	<ML [a]	([b])
Tetrachloroguaiacol	<ML [a]	([b])
2,3,4,6-tetrachlorophenol	<ML [a]	([b])
Pentachlorophenol	<ML [a]	([b])
AOX	2.64 [e]	[e] 1.41

[a] "<ML" means less than the minimum level specified in § 430.01(i) for the particular pollutant.

[b] This regulation does not specify this type of limitation for this pollutant; however, pretreatment control authorities may do so as appropriate.
[c] Picograms per liter.
[d] Grams per 1,000 kilograms (g/kkg).
[e] Kilograms per 1,000 kilograms (kg/kkg).

(2) The following pretreatment standards apply with respect to each fiber line operated by an indirect discharger subject to this section if the indirect discharger discloses to the pretreatment control authority in a report submitted under 40 CFR 403.12(b), (d), or (e) that it uses exclusively TCF bleaching processes at that fiber line. These pretreatment standards must be attained on or before April 16, 2001:

SUBPART B

Pollutant or pollutant parameter	PSES (TCF)	
	Maximum for any 1 day	Monthly average
AOX	<ML [a]	([b])

[a] "<ML" means less than the minimum level specified in § 430.01(i) for the particular pollutant.
[b] This regulation does not specify this type of limitation for this pollutant; however, pretreatment control authorities may do so as appropriate.

(b) The following pretreatment standards apply to all indirect dischargers, in accordance with the previous subcategorization scheme. An indirect discharger is not required to meet these pretreatment standards if it certifies to the pretreatment control authority that it is not using these compounds as biocides. In cases when POTWs find it necessary to impose mass effluent limitations, equivalent mass limitations are provided as guidance:

SUBPART B

[Supplemental PSES for bleached kraft facilities where market pulp is produced]

Pollutant or pollutant property	Maximum for any 1 day	
	kg/kkg (or pounds per 1,000 lb) of product	Milligrams/liter
Pentachlorophenol	0.0019	(0.011)(41.6)/y
Trichlorophenol	0.014	(0.082)(41.6)/y
y = wastewater discharged in kgal per ton of product.		

SUBPART B

[Supplemental PSES for bleached kraft facilities where paperboard, coarse paper, and tissue paper are produced]

Pollutant or pollutant property	Maximum for any 1 day	
	kg/kkg (or pounds per 1,000 lb) of product	Milligrams/liter
Pentachlorophenol	0.0016	(0.011)(35.4)/y
Trichlorophenol	0.012	(0.082)(35.4)/y
y = wastewater discharged in kgal per ton of product.		

SUBPART B

[Supplemental PSES for bleached kraft facilities where pulp and fine papers are produced and soda facilities where pulp and paper are produced]

Pollutant or pollutant property	Maximum for any 1 day	
	kg/kkg (or pounds per 1,000 lb) of product	Milligrams/liter
Pentachlorophenol	0.0014	(0.011)(30.9)/y
Trichlorophenol	0.011	(0.082)(30.9)/y
y = wastewater discharged in kgal per ton of product		

(c) An indirect discharger must demonstrate compliance with the pretreatment standards in paragraph (a)(1) of this section by monitoring at the point where the wastewater containing those pollutants leaves the bleach plant.

[63 FR 18635, Apr. 15, 1998; 63 FR 42239, Aug. 7, 1998]

§ 430.27 Pretreatment standards for new sources (PSNS).

Except as provided in 40 CFR 403.7, any new source subject to this subpart that introduces pollutants into a publicly owned treatment works must comply with 40 CFR part 403 and must achieve the following pretreatment standards for new sources (PSNS).

(a)(1) The following pretreatment standards apply with respect to each fiber line that is a new source, unless the indirect discharger discloses to the pretreatment control authority in a report submitted under 40 CFR 403.12 that it uses exclusively TCF bleaching processes at that fiber line:

SUBPART B

Pollutant or pollutant property	PSNS	
	Maximum for any 1 day	Monthly average
TCDD	<ML [a]	([b])
TCDF	31.9 [c]	([b])
Chloroform	6.92 [d]	4.14 [d]
Trichlorosyringol	<ML [a]	([b])
3,4,5-trichlorocatechol	<ML [a]	([b])
3,4,6-trichlorocatechol	<ML [a]	([b])
3,4,5-trichloroguaiacol	<ML [a]	([b])
3,4,6-trichloroguaiacol	<ML [a]	([b])
4,5,6-trichloroguaiacol	<ML [a]	([b])
2,4,5-trichlorophenol	<ML [a]	([b])
2,4,6-trichlorophenol	<ML [a]	([b])
Tetrachlorocatechol	<ML [a]	([b])
Tetrachloroguaiacol	<ML [a]	([b])
2,3,4,6-tetrachlorophenol	<ML [a]	([b])
Pentachlorophenol	<ML [a]	([b])
AOX	1.16 [e]	0.814 [e]

[a] "<ML" means less than the minimum level specified in § 430.01(i) for the particular pollutant.
[b] This regulation does not specify this type of limitation for this pollutant; however, pretreatment control authorities may do so as appropriate.
[c] Picograms per liter.
[d] Grams per 1,000 kilograms (g/kkg).
[e] Kilograms per 1,000 kilograms (kg/kkg).

(2) The following pretreatment standards apply with respect to each new source fiber line operated by an indirect discharger subject to this section if the indirect discharger discloses to the pretreatment control authority in a report submitted under 40 CFR 403.12(b), (d), or (e) that it uses exclusively TCF bleaching processes at that fiber line:

SUBPART B

Pollutant or pollutant parameter	PSNS (TCF)	
	Maximum for any 1 day	Monthly average
AOX	<ML [a]	([b])

[a] "<ML" means less than the minimum level specified in § 430.01(i) for the particular pollutant.
[b] This regulation does not specify this type of limitation for this pollutant; however, pretreatment control authorities may do so as appropriate.

(b) The following pretreatment standards apply to all new source indirect dischargers, regardless of when they commenced discharge, in accordance with the previous subcategorization scheme. An indirect discharger is not required to meet these pretreatment standards if it certifies to the pretreatment control authority that it is not using these compounds as biocides. In cases when POTWs find it necessary to impose mass-based effluent limitations, equivalent mass limitations are provided as guidance:

SUBPART B

[Supplemental PSNS for bleached kraft facilities where market pulp is produced]

Pollutant or pollutant property	Maximum for any 1 day	
	kg/kkg (or pounds per 1,000 lb) of product	Milligrams/liter
Pentachlorophenol	0.0019	(0.013)(36.6)/y
Trichlorophenol	0.014	(0.093)(36.6)/y
y = wastewater discharged in kgal per ton of product.		

SUBPART B

[Supplemental PSNS for bleached kraft facilities where paperboard, coarse paper, and tissue paper are produced]

Pollutant or pollutant property	Maximum for any 1 day	
	kg/kkg (or pounds per 1,000 lb) of product	Milligrams/liter
Pentachlorophenol	0.0016	(0.012)(31.7)/y
Trichlorophenol	0.012	(0.092)(31.7)/y
y = wastewater discharged in kgal per ton of product.		

SUBPART B

[Supplemental PSNS for bleached kraft facilities where pulp and fine papers are produced and soda facilities where pulp and paper are produced]

Pollutant or pollutant parameter	Maximum for any 1 day	
	kg/kkg (or pounds per 1,000 lb) of product	Milligrams/liter
Pentachlorophenol	0.0014	(0.014)(25.1)/y
Trichlorophenol	0.011	(0.101)(25.1)/y
y = wastewater discharged in kgal per ton of product.		

(c) An indirect discharger must demonstrate compliance with the pretreatment standards in paragraph (a)(1) of this section by monitoring at the point where the wastewater containing those pollutants leaves the bleach plant.

[63 FR 18635, Apr. 15, 1998; 63 FR 42239, Aug. 7, 1998]

§ 430.28 Best management practices (BMPs).

The definitions and requirements set forth in 40 CFR 430.03 apply to facilities in this subpart.

Subpart C—Unbleached Kraft Subcategory

§ 430.30 Applicability; description of the unbleached kraft subcategory.

The provisions of this subpart are applicable to discharges resulting from: the production of pulp and paper at unbleached kraft mills; the production of pulp and paper at unbleached kraft-neutral sulfite semi-chemical (cross recovery) mills; and the production of pulp and paper at combined unbleached kraft and semi-chemical mills, wherein the spent semi-chemical cooking liquor is burned within the unbleached kraft chemical recovery system.

§ 430.31 Specialized definitions.

For the purpose of this subpart, the general definitions, abbreviations, and methods of analysis set forth in 40 CFR part 401 and § 430.01 of this part shall apply to this subpart.

§ 430.32 Effluent limitations representing the degree of effluent reduction attainable by the application of the best practicable control technology currently available (BPT).

Except as provided in 40 CFR 125.30 through 125.32, any existing point source subject to this subpart must achieve the following effluent limitations representing the degree of effluent reduction attainable by the application of the best practicable control technology currently available (BPT):

SUBPART C

[BPT effluent limitations for unbleached kraft facilities]

Pollutant or pollutant property	Kg/kkg (or pounds per 1,000 lb) of product	
	Maximum for any 1 day	Average of daily values for 30 consecutive days
BOD5	5.6	2.8
TSS	12.0	6.0
pH	(1)	(1)

[1] Within the range of 6.0 to 9.0 at all times.

SUBPART C

[BPT effluent limitations for unbleached kraft facilities producing pulp and paper using the unbleached kraft-neutral sulfite semi-chemical (cross recovery) process]

Pollutant or pollutant property	Kg/kkg (or pounds per 1,000 lb) of product	
	Maximum for any 1 day	Average of daily values for 30 consecutive days
BOD5	8.0	4.0
TSS	12.5	6.25
pH	(1)	(1)

[1] Within the range of 6.0 to 9.0 at all times.

SUBPART C

[BPT effluent limitations for unbleached kraft facilities where pulp and paper are produced using a combined unbleached kraft and semi-chemical process, wherein the spent semi-chemical cooking liquor is burned within the unbleached kraft chemical recovery system]

Pollutant or pollutant property	Kg/kkg (or pounds per 1,000 lb) of product	
	Maximum for any 1 day	Average of daily values for 30 consecutive days
BOD5	([a])	([a])
TSS	([a])	([a])
pH	([a])	([a])

[a] [Reserved]

§ 430.33 Effluent limitations guidelines representing the degree of effluent reduction attainable by the application of the best conventional pollutant control technology (BCT).

Except as provided in 40 CFR 125.30 through 125.32, any existing point source subject to this subpart shall achieve the following effluent limitations representing the degree of effluent reduction attainable by the application of the best conventional pollutant control technology (BCT), except that non-continuous dischargers shall not be subject to the maximum day and average-of-30-consecutive-days limitations, but shall be subject to annual average effluent limitations:

SUBPART C

[BCT effluent limitations for unbleached kraft facilities]

Pollutant or pollutant property	Kg/kkg (or pounds per 1,000 lb) of product		
	Continuous dischargers	Non-continuous dischargers (annual average)	
		Maximum for any 1 day	Average of daily values for 30 consecutive days
BOD5	5.6	2.8	1.9
TSS	12.0	6.0	3.6
pH	([1])	([1])	([1])

[1] Within the range of 6.0 to 9.0 at all times.

SUBPART C

[BCT effluent limitations for unbleached kraft-neutral sulfite semi-chemical (cross recovery) process and/or a combined unbleached kraft and semi-chemical process, wherein the spent semi-chemical cooking liquor is burned within the unbleached kraft chemical recovery system]

Pollutant or pollutant property	Kg/kkg (or pounds per 1,000 lb) of product		
	Continuous dischargers		Non-continuous dischargers (annual average)
	Maximum for any 1 day	Average of daily values for 30 consecutive days	
BOD5	8.0	4.0	2.9
TSS	12.5	6.25	3.57
pH	([1])	([1])	([1])

[1] Within the range of 6.0 to 9.0 at all times.

§ 430.34 Effluent limitations representing the degree of effluent reduction attainable by the application of the best available technology economically achievable (BAT).

Except as provided in 40 CFR 125.30 through 125.32, any existing point source subject to this subpart where chlorophenolic-containing biocides are used must achieve the following effluent limitations representing the degree of effluent reduction attainable by the application of the best available technology economically achievable (BAT). Non-continuous dischargers shall not be subject to the maximum day mass limitations in kg/kkg (lb/1000 lb), but shall be subject to concentration limitations. Concentration limitations are only applicable to non-continuous dischargers. Permittees not using chlorophenolic-containing biocides must certify to the permit-issuing authority that they are not using these biocides:

SUBPART C

[BAT effluent limitations for unbleached kraft facilities]

Pollutant or pollutant property	Maximum for any 1 day	
	Kg/kkg (or pounds per 1,000 lb) of product	Milligrams/liter
Pentachlorophenol	0.00058	(0.011)(12.6)/y
Trichlorophenol	0.00053	(0.010)(12.6)/y
y=wastewater discharged in kgal per ton of product.		

SUBPART C

[BAT effluent limitations for unbleached kraft facilities where pulp and paper are produced using the unbleached kraft-neutral sulfite semi-chemical (cross recovery) process and/or a combined unbleached kraft and semi-chemical process, wherein the spent semi-chemical cooking liquor is burned within the unbleached kraft chemical recovery system]

Pollutant or pollutant property	Maximum for any 1 day	
	Kg/kkg (or pounds per 1,000 lb) of product	Milligrams/liter
Pentachlorophenol	0.00064	(0.011)(14.0)/y
Trichlorophenol	0.00059	(0.010)(14.0)/y
y=wastewater discharged in kgal per ton of product.		

§ 430.35 New source performance standards (NSPS).

Any new source subject to this subpart must achieve the following new source performance standards (NSPS), except that non-continuous dischargers shall not be subject to the maximum day and average of 30 consecutive days effluent limitations for BOD5 and TSS, but shall be subject to annual average effluent limitations. Also, for non-continuous dischargers, concentration limitations (mg/l) shall apply, where provided. Concentration limitations will only apply to non-continuous dischargers. Only facilities where chlorophenolic-containing biocides are used shall be subject to pentachlorophenol and trichlorophenol limitations. Permittees not using chlorophenolic-containing biocides must certify to the permit-issuing authority that they are not using these biocides:

SUBPART C

[NSPS for unbleached kraft facilities where linerboard is produced]

Pollutant or pollutant property	Kg/kkg (or pounds per 1,000 lb) of product		
	Continuous dischargers		Non-continuous dischargers (annual average)
	Maximum for any 1 day	Average of daily values for 30 consecutive days	
BOD5	3.4	1.8	0.94
TSS	5.8	3.0	1.6
pH	(1)	(1)	(1)

	Maximum for any 1 day	
	Kg/kkg (or pounds per 1,000 lb) of product	Milligrams/liter
Pentachlorophenol	0.00058	(0.015)(9.4)/y
Trichlorophenol	0.00053	(0.013)(9.4)/y
y = wastewater discharged in kgal per ton at all times.		

[1] Within the range of 5.0 to 9.0 at all times.

SUBPART C

[NSPS for unbleached kraft facilities where bag paper and other mixed products are produced]

Pollutant or pollutant property	Kg/kkg (or pounds per 1,000 lb) of product		
	Continuous dischargers		Non-continuous dischargers (annual average)
	Maximum for any 1 day	Average of daily values for 30 consecutive days	
BOD5	5.0	2.71	1.4
TSS	9.1	4.8	2.5
pH	(1)	(1)	(1)

	Maximum for any 1 day	
	Kg/kkg (or pounds per 1,000 lb) of product	Milligrams/liter
Pentachlorophenol	0.00058	(0.012)(11.4)/y
Trichlorophenol	0.00053	(0.011)(11.4)/y
y = wastewater discharged in kgal per ton at all times.		

[1] Within the range of 5.0 to 9.0 at all times.

SUBPART C

[NSPS for unbleached kraft facilities where pulp and paper are produced using the unbleached kraft-neutral sulfite semi-chemical (cross recovery) process and/or a combined unbleached kraft and semi-chemical process, wherein the spent semi-chemical cooking liquor is burned within the unbleached kraft chemical recovery system]

Pollutant or pollutant property	Kg/kkg (or pounds per 1,000 lb) of product		
	Continuous dischargers		Non-continuous dischargers (annual average)
	Maximum for any 1 day	Average of daily values for 30 consecutive days	
BOD5	3.9	2.1	1.1
TSS	7.3	3.8	1.9
pH	(1)	(1)	(1)

	Maximum for any 1 day	
	Kg/kkg (or pounds per 1,000 lb) of product	Milligrams/liter
Pentachlorophenol	0.00064	(0.013)(11.5)/y
Trichlorophenol	0.00059	(0.012)(11.5)/y
y = wastewater discharged in kgal per ton at all times.		

[1] Within the range of 5.0 to 9.0 at all times.

§ 430.36 Pretreatment standards for existing sources (PSES).

Except as provided in 40 CFR 403.7 and 403.13, any existing source subject to this subpart that introduces pollutants into a publicly owned treatment works must: comply with 40 CFR part 403; and achieve the following pretreatment standards for existing sources (PSES) if it uses chlorophenolic-containing biocides. Permittees not using chlorophenolic-containing biocides must certify to the permit-issuing authority that they are not using those biocides. PSES must be attained on or before July 1, 1984:

SUBPART C

[PSES for unbleached kraft facilities]

Pollutant or pollutant property	Maximum for any 1 day	
	Milligrams/liter	Kg/kkg (or pounds per 1,000 lb) of product [a]
Pentachlorophenol	(0.011)(12.6)/y	0.00058
Trichlorophenol	(0.010)(12.6)/y	0.00053
y = wastewater discharged in kgal per ton of product.		

[a] The following equivalent mass limitations are provided as guidance in cases where POTWs find it necessary to impose mass effluent limitations.

SUBPART C

[PSES for unbleached kraft facilities where pulp and paper are produced using the unbleached kraft-neutral sulfite semi-chemical (cross recovery) process and/or a combined unbleached kraft and semi-chemical process, wherein the spent semi-chemical cooking liquor is burned within the unbleached kraft chemical recovery system]

Pollutant or pollutant property	Maximum for any 1 day	
	Milligrams/liter	Kg/kkg (or pounds per 1,000 lb) of product [a]
Pentachlorophenol	(0.011)(14.0)/y	0.00064
Trichlorophenol	(0.010)(14.0)/y	0.00059
y = wastewater discharged in kgal per ton of product.		

[a] The following equivalent mass limitations are provided as guidance in cases where POTWs find it necessary to impose mass effluent limitations.

§ 430.37 Pretreatment standards for new sources (PSNS).

(a) Except as provided in 40 CFR 403.7, any new source subject to this subpart that introduces pollutants into a publicly owned treatment works must: comply with 40 CFR part 403; and achieve the following pretreatment standards for new sources (PSNS) if it uses chlorophenolic-containing biocides. Permittees not using chlorophenolic-containing biocides must certify to the permit-issuing authority that they are not using these biocides:

SUBPART C

[PSNS for unbleached kraft facilities where linerboard is produced]

Pollutant or pollutant property	Maximum for any 1 day	
	Milligrams/liter	Kg/kkg (or pounds per 1,000 lb) of product [a]
Pentachlorophenol	(0.015)(9.4)/y	0.00058
Trichlorophenol	(0.013)(9.4)/y	0.00053
y = wastewater discharged in kgal per ton of product.		

[a] The following equivalent mass limitations are provided as guidance in cases where POTWs find it necessary to impose mass effluent limitations.

SUBPART C

[PSNS for unbleached kraft facilities where bag paper and other mixed products are produced]

Pollutant or pollutant property	Maximum for any 1 day	
	Milligrams/liter	Kg/kkg (or pounds per 1,000 lb) of product [a]
Pentachlorophenol	(0.012)(11.4)/y	0.00058
Trichlorophenol	(0.011)(11.4)/y	0.00053
y = wastewater discharged in kgal per ton of product.		

[a] The following equivalent mass limitations are provided as guidance in cases where POTWs find it necessary to impose mass effluent limitations.

SUBPART C

[PSNS for unbleached kraft facilities where pulp and paper are produced using the unbleached kraft-neutral sulfite semi-chemical (cross recovery) process and/or a combined unbleached kraft and semi-chemical process, wherein the spent semi-chemical cooking liquor is burned within the unbleached kraft chemical recovery system]

Pollutant or pollutant property	Maximum for any 1 day	
	Milligrams/liter	Kg/kkg (or pounds per 1,000 lb) of product [a]
Pentachlorophenol	(0.013)(11.5)/y	0.00064
Trichlorophenol	(0.012)(11.5)/y	0.00059
y = wastewater discharged in kgal per ton of product.		

[a] The following equivalent mass limitations are provided as guidance in cases where POTWs find it necessary to impose mass effluent limitations.

Subpart D—Dissolving Sulfite Subcategory

§ 430.40 Applicability; description of the dissolving sulfite subcategory.

The provisions of this subpart are applicable to discharges resulting from the production of pulp at dissolving sulfite mills.

§ 430.41 Specialized definitions.

For the purpose of this subpart, the general definitions, abbreviations, and methods of analysis set forth in 40 CFR part 401 and § 430.01 of this part shall apply to this subpart.

§ 430.42 Effluent limitations representing the degree of effluent reduction attainable by the application of the best practicable control technology currently available (BPT).

(a) Except as provided in 40 CFR 125.30 through 125.32, any existing point source subject to this subpart must achieve the following effluent limitations representing the degree of effluent reduction attainable by the application of the best practicable control technology currently available (BPT), except that non-continuous dischargers shall not be subject to the maximum day and average of 30 consecutive days

limitations but shall be subject to annual average effluent limitations:

SUBPART D

[BPT effluent limitations for dissolving sulfite pulp facilities where nitration grade pulp is produced]

Pollutant or pollutant property	Kg/kkg (or pounds per 1,000 lb) of product		
	Continuous dischargers		Non-continuous discharges (annual average)
	Maximum for any 1 day	Average of daily values for 30 consecutive days	
BOD5	41.4	21.5	12.1
TSS	70.65	38.05	20.9
pH	(1)	(1)	(1)

1 Within the range of 5.0 to 9.0 at all times.

SUBPART D

[BPT effluent limitations for dissolving sulfite pulp facilities where viscose grade pulp is produced]

Pollutant or pollutant property	Kg/kkg (or pounds per 1,000 lb) of product		
	Continuous dischargers		Non-continuous discharges (annual average)
	Maximum for any 1 day	Average of daily values for 30 consecutive days	
BOD5	44.3	23.0	12.9
TSS	70.65	38.05	20.9
pH	(1)	(1)	(1)

1 Within the range of 5.0 to 9.0 at all times.

SUBPART D

[BPT effluent limitations for dissolving sulfite pulp facilities where cellophane grade pulp is produced]

Pollutant or pollutant property	Kg/kkg (or pounds per 1,000 lb) of product		
	Continuous dischargers		Non-continuous discharges (annual average)
	Maximum for any 1 day	Average of daily values for 30 consecutive days	
BOD5	48.05	24.95	14.0
TSS	70.65	38.05	20.9
pH	(1)	(1)	(1)

1 Within the range of 5.0 to 9.0 at all times.

SUBPART D

[BPT effluent limitations for dissolving sulfite pulp facilities where acetate grade pulp is produced]

Pollutant or pollutant property	Kg/kkg (or pounds per 1,000 lb) of product		
	Continuous dischargers		Non-continuous discharges (annual average)
	Maximum for any 1 day	Average of daily values for 30 consecutive days	
BOD5	[1]50.80	[1]26.40	[1]14.83
TSS	70.65	38.05	20.9
pH	(2)	(2)	(2)

1 BOD5 effluent limitations were remanded (Weyerhaeuser Company, et al v. Costle, 590 F. 2nd 1011; D.C. Circuit 1978).

[2] Within the range of 5.0 to 9.0 at all times.

(b) The following limitations establish the quantity or quality of pollutants or pollutant properties, controlled by this section, resulting from the use of wet barking operations, which may be discharged by a point source subject to the provisions of this subpart. These limitations are in addition to the limitations set forth in paragraph (a) of this section and shall be calculated using the proportion of the mill's total production due to use of logs which are subject to such operations. Non-continuous dischargers shall not be subject to the maximum day and average of 30 consecutive days limitations, but shall be subject to annual average effluent limitations:

SUBPART D

[BPT effluent limitations]

Pollutant or pollutant property	Kg/kkg (or pounds per 1,000 lb) of product		
	Continuous dischargers		Non-continuous dischargers (annual average)
	Maximum for any 1 day	Average of daily values for 30 consecutive days	
BOD5	0.7	0.35	0.2
TSS	0.15	0.1	0.05
pH	([1])	([1])	([1])

[1] Within the range of 5.0 to 9.0 at all times.

(c) The following limitations establish the quantity or quality of pollutants or pollutant parameters, controlled by this section, resulting from the use of log washing or chip washing operations, which may be discharged by a point source subject to the provisions of this subpart. These limitations are in addition to the limitations set forth in paragraph (a) of this section and shall be calculated using the proportion of the mill's total production due to use of logs and/or chips which are subject to such operations. Non-continuous dischargers shall not be subject to the maximum day and average of 30 consecutive days limitations, but shall be subject to the annual average effluent limitations:

SUBPART D

[BPT effluent limitations]

Pollutant or pollutant property	Kg/kkg (or pounds per 1,000 lb) of product		
	Continuous dischargers		Non-continuous dischargers (annual average)
	Maximum for any 1 day	Average of daily values for 30 consecutive days	
BOD5	0.15	0.1	0.05
TSS	0.15	0.1	0.05
pH	([1])	([1])	([1])

[1] Within the range of 5.0 to 9.0 at all times.

(d) The following limitations establish the quantity or quality of pollutants or pollutant properties, controlled by this section, resulting from the use of log flumes or log ponds, which may be discharged by a point source subject to the provisions of this subpart. These limitations are in addition to the limitations set forth in paragraph (a) of this section and shall be calculated

using the proportion of the mill's total production due to use of logs which are subject to such operations. Non-continuous dischargers shall not be subject to the maximum day and average of 30 consecutive days limitations but shall be subject to the annual average effluent limitations:

SUBPART D

[BPT effluent limitations]

Pollutant or pollutant property	Kg/kkg (or pounds per 1,000 lb) of product		
	Continuous dischargers		Non-continuous dischargers (annual average)
	Maximum for any 1 day	Average of daily values for 30 consecutive days	
BOD5	0.15	0.1	0.05
TSS	0.15	0.1	0.05
pH	([1])	([1])	([1])

[1] Within the range of 5.0 to 9.0 at all times.

§ 430.43 Effluent limitations guidelines representing the degree of effluent reduction attainable by the application of the best conventional pollutant control technology (BCT).

Except as provided in 40 CFR 125.30 through 125.32, any existing point source subject to this subpart shall achieve the following effluent limitations representing the degree of effluent reduction attainable by the application of the best conventional pollutant control technology (BCT): The limitations shall be the same as those specified for conventional pollutants (which are defined in 40 CFR 401.16) in § 430.42 of this subpart for the best practicable control technology currently available (BPT).

§ 430.44 Effluent limitations representing the degree of effluent reduction attainable by the application of the best available technology economically achievable (BAT).

Except as provided in 40 CFR 125.30 through 125.32, any existing point source subject to this subpart where chlorophenolic-containing biocides are used must achieve the following effluent limitations representing the degree of effluent reduction attainable by the application of the best available technology economically achievable (BAT). Non-continuous dischargers shall not be subject to the maximum day mass limitations in kg/kkg (lb/1000 lb) but shall be subject to concentration limitations. Concentration limitations are only applicable to non-continuous dischargers. Permittees not using chlorophenolic-containing biocides must certify to the permit-issuing authority that they are not using these biocides:

SUBPART D

[BAT effluent limitations for dissolving sulfite pulp facilities where nitration, viscose, or cellophane pulps are produced]

Pollutant or pollutant property	Maximum for any 1 day	
	Kg/kkg (or pounds per 1,000 lb) of product	Milligrams/liter
Pentachlorophenol	0.0030	(0.011)(66.0)/y
Trichlorophenol	0.019	(0.068)(66.0)/y
y = wastewater discharged in kgal per ton of product.		

SUBPART D

[BAT effluent limitations for dissolving sulfite pulp facilities where acetate grade pulp is produced]

Pollutant or pollutant property	Maximum for any 1 day	
	Kg/kkg (or pounds per 1,000 lb) of product	Milligrams/liter
Pentachlorophenol	0.0033	(0.011)(72.7)/y
Trichlorophenol	0.021	(0.068)(72.7)/y
y = wastewater discharged in kgal per ton of product.		

§ 430.45 New source performance standards (NSPS).

Any new source subject to this subpart must achieve the following new source performance standards (NSPS), except that non-continuous dischargers shall not be subject to the maximum day and average of 30 consecutive days effluent limitations for BOD5 and TSS, but shall be subject to annual average effluent limitations. Also, for non-continuous dischargers, concentration limitations (mg/l) shall apply, where provided. Concentration limitations will only apply to non-continuous dischargers. Only facilities where chlorophenolic-containing biocides are used shall be subject to pentachlorophenol and trichlorophenol limitations. Permittees not using chlorophenolic-containing biocides must certify to the permit-issuing authority that they are not using these biocides:

SUBPART D

[NSPS for dissolving sulfite pulp facilities where nitration grade pulp is produced]

Pollutant or pollutant property	Kg/kkg (or pounds per 1,000 lb) of product		
	Continuous dischargers		Non-continuous dischargers (annual average)
	Maximum for any 1 day	Average of daily values for 30 consecutive days	
BOD5	26.9	14.5	7.59
TSS	40.8	21.3	11.2
pH	(1)	(1)	(1)

	Maximum for any 1 day	
	Kg/kkg (or pounds per 1,000 lb) of product	Milligrams/liter
Pentachlorophenol	0.0030	(0.012)(59.0)/y
Trichlorophenol	0.019	(0.012)(59.0)/y
y = wastewater discharged in kgal per ton at all times.		

[1] Within the range of 5.0 to 9.0 at all times.

SUBPART D

[NSPS for dissolving sulfite pulp facilities where viscose grade pulp is produced]

Pollutant or pollutant property	Kg/kkg (or pounds per 1,000 lb) of product		
	Continuous dischargers		Non-continuous dischargers (annual average)
	Maximum for any 1 day	Average of daily values for 30 consecutive days	
BOD5	28.7	15.5	8.12

SUBPART D—Continued

[NSPS for dissolving sulfite pulp facilities where viscose grade pulp is produced]

Pollutant or pollutant property	Kg/kkg (or pounds per 1,000 lb) of product		
	Continuous dischargers		Non-continuous dischargers (annual average)
	Maximum for any 1 day	Average of daily values for 30 consecutive days	
TSS	40.8	21.3	11.2
pH	(1)	(1)	(1)

	Maximum for any 1 day	
	Kg/kkg (or pounds per 1,000 lb) of product	Milligrams/liter
Pentachlorophenol	0.0030	(0.012)(59.0)/y
Trichlorophenol	0.019	(0.012)(59.0)/y
y = wastewater discharged in kgal per ton at all times.		

[1] Within the range of 5.0 to 9.0 at all times.

SUBPART D

[NSPS for dissolving sulfite pulp facilities where cellophane grade pulp is produced]

Pollutant or pollutant property	Kg/kkg (or pounds per 1,000 lb) of product		
	Continuous dischargers		Non-continuous dischargers (annual average)
	Maximum for any 1 day	Average of daily values for 30 consecutive days	
BOD5	31.2	16.8	8.80
TSS	40.8	21.3	11.2
pH	(1)	(1)	(1)

	Maximum for any 1 day	
	Kg/kkg (or pounds per 1,000 lb) of product	Milligrams/liter
Pentachlorophenol	0.0030	(0.012)(59.0)/y
Trichlorophenol	0.019	(0.076)(59.0)/y
y = wastewater discharged in kgal per ton at all times.		

[1] Within the range of 5.0 to 9.0 at all times.

SUBPART D

[NSPS for dissolving sulfite pulp facilities where acetate grade pulp is produced]

Pollutant or pollutant property	Kg/kkg (or pounds per 1,000 lb) of product		
	Continuous dischargers		Non-continuous dischargers (annual average)
	Maximum for any 1 day	Average of daily values for 30 consecutive days	
BOD5	39.6	21.4	11.2
TSS	41.1	21.5	11.3
pH	(1)	(1)	(1)

	Maximum for any 1 day	
	Kg/kkg (or pounds per 1,000 lb) of product	Milligrams/liter
Pentachlorophenol	0.0033	(0.012)(65.7)/y
Trichlorophenol	0.021	(0.075)(65.7)/y
y = wastewater discharged in kgal per ton at all times.		

[1] Within the range of 5.0 to 9.0 at all times.

§ 430.46 Pretreatment standards for existing sources (PSES).

Except as provided in 40 CFR 403.7 and 403.13, any existing source subject to this subpart that introduces pollutants into a publicly owned treatment works must: comply with 40 CFR part 403; and achieve the following pretreatment standards for existing sources (PSES) if it uses chlorophenolic-containing biocides. Permittees not using chlorophenolic-containing biocides must certify to the permit-issuing authority that they are not using these biocides. PSES must be attained on or before July 1, 1984:

SUBPART D

[PSES for dissolving sulfite pulp facilities where nitration, viscose, or cellophane grade pulps are produced]

Pollutant or pollutant property	Maximum for any 1 day	
	Milligrams/liter (mg/l)	Kg/kkg (or pounds per 1,000 lb) of product [a]
Pentachlorophenol	(0.011)(66.0)/y	0.0030
Trichlorophenol	(0.082)(66.0)/y	0.023
y = wastewater discharged in kgal per ton of product.		

[a] The following equivalent mass limitations are provided as guidance in cases when POTWs find it necessary to impose mass effluent limitations.

SUBPART D

[PSES for dissolving sulfite pulp facilities where acetate grade pulp is produced]

Pollutant or pollutant property	Maximum for any 1 day	
	Milligrams/liter (mg/l)	Kg/kkg (or pounds per 1,000 lb) of product [a]
Pentachlorophenol	(0.011)(72.7)/y	0.0033
Trichlorophenol	(0.082)(72.7)/y	0.025
y = wastewater discharged in kgal per ton of product.		

[a] The following equivalent mass limitations are provided as guidance in cases when POTWs find it necessary to impose mass effluent limitations.

§ 430.47 Pretreatment standards for new sources (PSNS).

Except as provided in 40 CFR 403.7, any new source subject to this subpart that introduces pollutants into a publicly owned treatment works must: comply with 40 CFR part 403; and achieve the following pretreatment standards for new sources (PSNS) if it uses chlorophenolic-containing biocides. Permittees not using chlorophenolic-containing biocides must certify to the permit-issuing authority that they are not using these biocides:

SUBPART D

[PSNS for dissolving sulfite pulp facilities where nitration, viscose, or cellophane grade pulps are produced]

Pollutant or pollutant property	Maximum for any 1 day	
	Milligrams/liter (mg/l)	Kg/kkg (or pounds per 1,000 lb) of product [a]
Pentachlorophenol	(0.012)(59.0)/y	0.0030
Trichlorophenol	(0.092)(59.0)/y	0.023
y = wastewater discharged in kgal per ton of product.		

[a] The following equivalent mass limitations are provided as guidance in cases when POTWs find it necessary to impose mass effluent limitations.

SUBPART D

[PSNS for dissolving sulfite pulp facilities where acetate grade pulp is produced]

Pollutant or pollutant property	Maximum for any 1 day	
	Milligrams/liter (mg/l)	Kg/kkg (or pounds per 1,000 lb) of product [a]
Pentachlorophenol	(0.012)(65.7)/y	0.0033
Trichlorophenol	(0.091)(65.7)/y	0.025
y=wastewater discharged in kgal per ton of product.		

[a] The following equivalent mass limitations are provided as guidance in cases when POTWs find it necessary to impose mass effluent limitations.

Subpart E—Papergrade Sulfite Subcategory

§ 430.50 Applicability; description of the papergrade sulfite subcategory.

The provisions of this subpart apply to discharges resulting from the: Integrated production of pulp and paper at papergrade sulfite mills, where blow pit pulp washing techniques are used; and the integrated production of pulp and paper at papergrade sulfite mills where vacuum or pressure drums are used to wash pulp.

§ 430.51 Specialized definitions.

(a) Except as provided in paragraphs (b) and (c) of this section, the general definitions, abbreviations, and methods of analysis set forth in 40 CFR part 401 and § 430.01 of this part apply to this subpart.

(b) *Sulfite cooking liquor* is defined as bisulfite cooking liquor when the pH of the liquor is between 3.0 and 6.0 and as acid sulfite cooking liquor when the pH is less than 3.0.

(c) For this subpart, the segments for the papergrade sulfite subcategory are defined as follows:

(1) The calcium-, magnesium-, or sodium-based sulfite pulp segment consists of papergrade sulfite mills where pulp and paper are produced using an acidic cooking liquor of calcium, magnesium, or sodium sulfite, unless those mills are specialty grade sulfite mills;

(2) The ammonium-based sulfite pulp segment consists of papergrade sulfite mills where pulp and paper are produced using an acidic cooking liquor of ammonium sulfite, unless those mills are specialty grade sulfite mills;

(3) The specialty grade sulfite pulp segment consists of those papergrade sulfite mills where a significant portion of production is characterized by pulp with a high percentage of alpha cellulose and high brightness sufficent to produce end products such as plastic molding compounds, saturating and laminating products, and photographic papers. The specialty grade segment also includes those mills where a major portion of production is 91 ISO brightness and above.

§ 430.52 Effluent limitations representing the degree of effluent reduction attainable by the application of the best practicable control technology currently available (BPT).

(a) Except as provided in 40 CFR 125.30 through 125.32, any existing point

source subject to this subpart must achieve the following effluent limitations representing the degree of effluent reduction attainable by the application of the best practicable control technology currently available (BPT):

SUBPART E

[Bisulfite liquor/surface condensers; BPT effluent limitations for papergrade sulfite facilities where blow pit washing techniques are used]

Pollutant or pollutant property	Kg/kkg (or pounds per 1,000 lb) of product		
	Continuous dischargers		Non-continuous dischargers (annual average)
	Maximum for any 1 day	Average of daily values for 30 consecutive days	
BOD5	31.8	16.55	9.30
TSS	43.95	23.65	12.99
pH	(1)	(1)	(1)

[1] Within the range of 5.0 to 9.0 at all times.

SUBPART E

[Bisulfite liquor/barometric condensers; BPT effluent limitations for papergrade sulfite facilities where blow pit washing techniques are used]

Pollutant or pollutant property	Kg/kkg (or pounds per 1,000 lb) of product		
	Continuous dischargers		Non-continuous dischargers (annual average)
	Maximum for any 1 day	Average of daily values for 30 consecutive days	
BOD5	34.7	18.05	10.14
TSS	52.2	28.1	15.44
pH	(1)	(1)	(1)

[1] Within the range of 5.0 to 9.0 at all times.

SUBPART E

[Acid sulfite liquor/surface condensers; BPT effluent limitations for papergrade sulfite facilities where blow pit washing techniques are used]

Pollutant or pollutant property	Kg/kkg (or pounds per 1,000 lb) of product		
	Continuous dischargers		Non-continuous dischargers (annual average)
	Maximum for any 1 day	Average of daily values for 30 consecutive days	
BOD5	32.3	16.8	9.44
TSS	43.95	23.65	12.99
pH	(1)	(1)	(1)

[1] Within the range of 5.0 to 9.0 at all times.

SUBPART E

[Acid sulfite liquor/barometric condensers; BPT effluent limitations for papergrade sulfite facilities where blow pit washing techniques are used]

Pollutant or pollutant property	Kg/kkg (or pounds per 1,000 lb) of product		
	Continuous dischargers		Non-continuous dischargers (annual average)
	Maximum for any 1 day	Average of daily values for 30 consecutive days	
BOD5	35.55	18.5	10.39
TSS	52.2	28.1	15.44
pH	(1)	(1)	(1)

1 Within the range of 5.0 to 9.0 at all times.

SUBPART E

[Bisulfite liquor/surface condensers; BPT effluent limitations for papergrade sulfite facilities where vacuum or pressure drums are used to wash pulp]

Pollutant or pollutant property	Kg/kkg (or pounds per 1,000 lb) of product		
	Continuous dischargers		Non-continuous dischargers (annual average)
	Maximum for any 1 day	Average of daily values for 30 consecutive days	
BOD5	26.7	13.9	7.81
TSS	43.95	23.65	12.99
pH	(1)	(1)	(1)

1 Within the range of 5.0 to 9.0 at all times.
NOTE: Limitations above do not apply to mills using continuous digesters.

SUBPART E

[Bisulfite liquor/barometric condensers; BPT effluent limitations for papergrade sulfite facilities where vacuum or pressure drums are used to wash pulp]

Pollutant or pollutant property	Kg/kkg (or pounds per 1,000 lb) of product		
	Continuous dischargers		Non-continuous dischargers (annual average)
	Maximum for any 1 day	Average of daily values for 30 consecutive days	
BOD5	29.4	15.3	8.60
TSS	52.2	28.1	15.44
pH	(1)	(1)	(1)

1 Within the range of 5.0 to 9.0 at all times.
NOTE: Limitations above do not apply to mills using continuous digesters.

SUBPART E

[Acid sulfite liquor/surface condensers; BPT effluent limitations for papergrade sulfite facilities where vacuum or pressure drums are used to wash pulp]

Pollutant or pollutant property	Kg/kkg (or pounds per 1,000 lb) of product		
	Continuous dischargers		Non-continuous dischargers (annual average)
	Maximum for any 1 day	Average of daily values for 30 consecutive days	
BOD5	29.75	15.5	8.71
TSS	43.95	23.65	12.99

SUBPART E—Continued

[Acid sulfite liquor/surface condensers; BPT effluent limitations for papergrade sulfite facilities where vacuum or pressure drums are used to wash pulp]

Pollutant or pollutant property	Kg/kkg (or pounds per 1,000 lb) of product		
	Continuous dischargers		Non-continuous dischargers (annual average)
	Maximum for any 1 day	Average of daily values for 30 consecutive days	
pH	(1)	(1)	(1)

1 Within the range of 5.0 to 9.0 at all times.
NOTE: Limitations above do not apply to mills using continuous digesters.

SUBPART E

[Acid sulfite liquor/barometric condensers; BPT effluent limitations for papergrade sulfite facilities where vacuum or pressure drums are used to wash pulp]

Pollutant or pollutant property	Kg/kkg (or pounds per 1,000 lb) of product		
	Continuous dischargers		Non-continuous dischargers (annual average)
	Maximum for any 1 day	Average of daily values for 30 consecutive days	
BOD5	32.5	16.9	9.49
TSS	52.2	28.1	15.44
pH	(1)	(1)	(1)

1 Within the range of 5.0 to 9.0 at all times.
NOTE: Limitations above do not apply to mills using continuous digesters.

SUBPART E

[Continuous digesters; BPT effluent limitations for papergrade sulfite facilities where vacuum or pressure drums are used to wash pulp]

Pollutant or pollutant property	Kg/kkg (or pounds per 1,000 lb) of product		
	Continuous dischargers		Non-continuous dischargers (annual average)
	Maximum for any 1 day	Average of daily values for 30 consecutive days	
BOD5	38.15	19.85	11.15
TSS	53.75	28.95	15.91
pH	(1)	(1)	(1)

1 Within the range of 5.0 to 9.0 at all times.

(b) The following limitations establish the quantity or quality of pollutants or pollutant properties, controlled by this section, resulting from the use of wet barking operations, which may be discharged by a point source subject to the provisions of this subpart. These limitations are in addition to the limitations set forth in paragraph (a) of this section and shall be calculated using the proportion of the mill's total production due to use of logs which are subject to such operations:

SUBPART E

[BPT effluent limitations for papergrade sulfite facilities where blow pit washing techniques are used]

Pollutant or pollutant property	Kg/kkg (or pounds per 1,000 lb) of product		
	Continuous dischargers		Non-continuous dischargers (annual average)
	Maximum for any 1 day	Average of daily values for 30 consecutive days	
BOD5	2.7	1.45	0.80
TSS	7.5	3.95	2.19
pH	(1)	(1)	(1)

1 Within the range of 5.0 to 9.0 at all times.

SUBPART E

[BPT effluent limitations for papergrade sulfite facilities where vacuum or pressure drums are used to wash pulp]

Pollutant or pollutant property	Kg/kkg (or pounds per 1,000 lb) of product		
	Continuous dischargers		Non-continuous dischargers (annual average)
	Maximum for any 1 day	Average of daily values for 30 consecutive days	
BOD5	3.05	1.6	0.90
TSS	7.5	3.95	2.19
pH	(1)	(1)	(1)

1 Within the range of 5.0 to 9.0 at all times.

(c) The following limitations establish the quantity or quality of pollutants or pollutant parameters, controlled by this section, resulting from the use of log washing or chip washing operations, which may be discharged by a point source subject to the provisions of this subpart. These limitations are in addition to the limitations set forth in paragraph (a) of this section and shall be calculated using the proportion of the mill's total production due to use of logs and/or chips which are subject to such operations:

SUBPART E

[BPT effluent limitations for papergrade sulfite facilities where blow pit washing techniques are used]

Pollutant or pollutant property	Kg/kkg (or pounds per 1,000 lb) of product		
	Continuous dischargers		Non-continuous dischargers (annual average)
	Maximum for any 1 day	Average of daily values for 30 consecutive days	
BOD5	0.15	0.1	0.05
TSS	2.55	1.35	0.75
pH	(1)	(1)	(1)

1 Within the range of 5.0 to 9.0 at all times.

SUBPART E

[BPT effluent limitations for papergrade sulfite facilities where vacuum or pressure drums are used to wash pulp]

Pollutant or pollutant property	Kg/kkg (or pounds per 1,000 lb) of product		
	Continuous dischargers		Non-continuous dischargers (annual average)
	Maximum for any 1 day	Average of daily values for 30 consecutive days	
BOD5	0.35	0.2	0.1
TSS	2.55	1.35	0.75
pH	(1)	(1)	(1)

[1] Within the range of 5.0 to 9.0 at all times.

(d) The following limitations establish the quantity or quality of pollutants or pollutant properties, controlled by this section, resulting from the use of log flumes or log ponds, which may be discharged by a point source subject to the provisions of this subpart. These limitations are in addition to the limitations set forth in paragraph (a) of this section and shall be calculated using the proportion of the mill's total production due to use of logs which are subject to such operations:

SUBPART E

[BPT effluent limitations for papergrade sulfite facilities where blow pit washing techniques are used]

Pollutant or pollutant property	Kg/kkg (or pounds per 1,000 lb) of product		
	Continuous dischargers		Non-continuous dischargers (annual average)
	Maximum for any 1 day	Average of daily values for 30 consecutive days	
BOD5	0.35	0.2	0.1
TSS	1.7	0.9	0.5
pH	(1)	(1)	(1)

[1] Within the range of 5.0 to 9.0 at all times.

SUBPART E

[BPT effluent limitations for papergrade sulfite facilities where vacuum or pressure drums are used to wash pulp]

Pollutant or pollutant property	Kg/kkg (or pounds per 1,000 lb) of product		
	Continuous dischargers		Non-continuous dischargers (annual average)
	Maximum for any 1 day	Average of daily values for 30 consecutive days	
BOD5	0.7	0.35	0.2
TSS	1.70	0.9	0.5
pH	(1)	(1)	(1)

[1] Within the range of 5.0 to 9.0 at all times.

§ 430.53 Effluent limitations representing the degree of effluent reduction attainable by the application of the best conventional pollutant control technology (BCT).

Except as provided in 40 CFR 125.30 through 125.32, any existing point source subject to this subpart must achieve the following effluent limitations representing the degree of effluent reduction attainable by the application of the best conventional pollutant control technology (BCT). The limitations shall be the same as those specified for conventional pollutants in § 430.52 of this subpart for the best practicable control technology currently available (BCT).

§ 430.54 Effluent limitations representing the degree of effluent reduction attainable by the application of best available technology economically achievable (BAT).

Except as provided in 40 CFR 125.30 through 125.32, any existing point source subject to this subpart must achieve the following effluent limitations representing the degree of effluent reduction attainable by the application of the best available technology economically achievable (BAT).

(a)(1) The following effluent limitations apply to all dischargers in the calcium-, magnesium-, or sodium-based sulfite pulp segment:

SUBPART E

[Production of Calcium-, Magnesium-, or Sodium-based Sulfite Pulps]

Pollutant or pollutant property	BAT effluent limitations			
	Continuous dischargers		Non-continuous dischargers	
	Maximum for any 1 day	Monthly average	Maximum for any 1 day	Annual average
AOX	<ML[a]	([b])	<ML[a]	([b])
COD	([c])	([c])	([c])	([c])

[a] "<ML" means less than the minimum level specified in § 430.01(i) for the particular pollutant.
[b] This regulation does not specify this type of limitation for this pollutant; however, permitting authorities may do so as appropriate.
[c] [Reserved]

(2)(i) The following effluent limitations apply to all dischargers in the ammonium-based sulfite pulp segment:

SUBPART E—PRODUCTION OF AMMONIUM-BASED SULFITE PULPS

Pollutant or pollutant property	BAT effluent limitations	
	Maximum for any 1 day	Monthly average
TCDD[a]	<ML[b]	([c])
TCDF[a]	<ML[b]	([c])
Chloroform[a]	([d])	([c])
Trichlorosyringol[a]	<ML[b]	([c])
3,4,5-trichlorocatechol[a]	<ML[b]	([c])
3,4,6-trichlorocatechol[a]	<ML[b]	([c])
3,4,5-trichloroguaiacol[a]	<ML[b]	([c])
3,4,6-trichloroguaiacol[a]	<ML[b]	([c])
4,5,6-trichloroguaiacol[a]	<ML[b]	([c])
2,4,5-trichlorophenol[a]	<ML[b]	([c])
2,4,6-trichlorophenol[a]	<ML[b]	([c])
Tetrachlorocatechol[a]	<ML[b]	([c])
Tetrachloroguaiacol[a]	<ML[b]	([c])
2,3,4,6-tetrachlorophenol[a]	<ML[b]	([c])
Pentachlorophenol NT><ML[b]	([c])	

	Continuous dischargers		Non-continuous dischargers	
	Maximum for any 1 day	Monthly average	Maximum for any 1 day	Annual average
AOX	([d])	([d])	([d])	([d])
COD	([d])	([d])	([d])	([d])

[a] These limitations do not apply with respect to fiber lines that use a TCF bleaching process as disclosed by the discharger in its permit application under 40 CFR 122.21(g)(3) and certified under 40 CFR 122.22.
[b] "<ML" means less than the minimum level specified in § 430.01(i) for the particular pollutant.
[c] This regulation does not specify this type of limitation for this pollutant; however, permitting authorities may do so as appropriate.
[d] [Reserved]

(ii) The following effluent limitations apply to all dischargers in the ammonium-based sulfite pulp segment with respect to each fiber line that uses exclusively TCF bleaching processes, as disclosed by the discharger in its NPDES permit application under 40 CFR 122.21(g)(3) and certified under 40 CFR 122.22:

SUBPART E—PRODUCTION OF AMMONIUM-BASED SULFITE PULPS

Pollutant or pollutant property	BAT effluent limitations (TCF)			
	Continuous dischargers		Non-continuous dischargers	
	Maximum for any 1 day	Monthly average	Maximum for any 1 day	Annual average
AOX	<ML [a]	([b])	<ML [a]	([b])
COD	([c])	([c])	([c])	([c])

[a] "<ML" means less than the minimum level specified in § 430.01(i) for the particular pollutant.
[b] This regulation does not specify this type of limitation for this pollutant; however, permitting authorities may do so as appropriate.
[c] [Reserved]

(3)(i) The following effluent limitations apply to all dischargers in the specialty grade pulp segment:

SUBPART E—PRODUCTION OF SPECIALTY GRADE SULFITE PULPS

Pollutant or pollutant property	BAT effluent limitations	
	Maximum for any 1 day	Monthly Average
TCDD [a]	<ML [b]	([c])
TCDF [a]	<ML [b]	([c])
Chloroform [a]	([d])	([c])
Trichlorosyringol [a]	<ML [b]	([c])
3,4,5-trichlorocatechol [a]	<ML [b]	([c])
3,4,6-trichlorocatechol [a]	<ML [b]	([c])
3,4,5-trichloroguaiacol [a]	<ML [b]	([c])
3,4,6-trichloroguaiacol [a]	<ML [b]	([c])
4,5,6-trichloroguaiacol [a]	<ML [b]	([c])
2,4,5-trichlorophenol [a]	<ML [b]	([c])
2,4,6-trichlorophenol [a]	<ML [b]	([c])
Tetrachlorocatechol [a]	<ML [b]	([c])
Tetrachloroguaiacol [a]	<ML [b]	([c])
2,3,4,6-tetrachlorophenol [a]	<ML [b]	([c])
Pentachlorophenol [a]	<ML [b]	([c])

	Continuous dischargers		Non-continuous dischargers	
	Maximum for any 1 day	Monthly average	Maximum for any 1 day	Annual average
AOX	([d])	([d])	([d])	([d])
COD	([d])	([d])	([d])	([d])

[a] These limitations do not apply with respect to fiber lines that use a TCF bleaching process as disclosed by the discharger in its permit application under 40 CFR 122.21(g)(3) and certified under 40 CFR 122.22.
[b] "<ML" means less than the minimum level specified in § 430.01(i) for the particular pollutant.
[c] This regulation does not specify this type of limitation for this pollutant; however, permitting authorities may do so as appropriate.
[d] [Reserved]

(ii) The following effluent limitations apply to dischargers in the specialty grade pulp segment with respect to each fiber line that uses exclusively TCF bleaching processes, as disclosed by the discharger in its NPDES permit application under 40 CFR 122.21(g)(3) and certified under 40 CFR 122.22:

SUBPART E—PRODUCTION OF SPECIALTY GRADE PULPS

Pollutant or pollutant property	BAT effluent limitations (TCF)			
	Continuous dischargers		Non-continuous dischargers	
	Maximum for any 1 day	Monthly average	Maximum for any 1 day	Annual average
AOX	<ML [a]	([b])	<ML [a]	([b])
COD	([c])	([c])	([c])	([c])

[a] "<ML" means less than the minimum level specified in § 430.01(i) for the particular pollutant.
[b] This regulation does not specify this type of limitation for this pollutant; however, permitting authorities may do so as appropriate.
[c] [Reserved]

(b) The following additional effluent limitations apply to each discharger subject to this section in accordance with the previous subcatgorization scheme unless it certifies to the permitting authority that it is not using these compounds as biocides. Also, for non-continuous dischargers, concentration limitations (mg/l) shall apply. Concentration limitations will only apply to non-continuous dischargers:

SUBPART E

[Supplemental BAT effluent limitations]

Pollutant or pollutant property	Maximum for any 1 day	
	kg/kkg (or pounds per 1,000 lb) of product	Milligrams/liter
Pentachlorophenol	0.00058exp(0.017x)	((0.011)(12.67)exp(0.017x))/y
Trichlorophenol	0.0036exp(0.017x)	((0.068)(12.67)exp(0.017x))/y
x = percent sulfite pulp in final product.		
y = wastewater discharged in kgal per ton of product.		

(c) Pursuant to 40 CFR 122.44(i) and 122.45(h), a discharger must demonstrate compliance with the limitations in paragraphs (a)(2) or (a)(3) of this section, as applicable, by monitoring for all pollutants (except for AOX and COD) at the point where the wastewater containing those pollutants leaves the bleach plant. The permitting authority may impose effluent

limitations and/or monitoring requirements on internal wastestreams for any other pollutants covered in this section as appropriate under 40 CFR 122.44(i) and 122.45(h).

§ 430.55 New source performance standards (NSPS).

New sources subject to this subpart must achieve the following new source performance standards (NSPS), as applicable.

(a) The following standards apply to each new source regardless of when it commenced discharge:

SUBPART E

[1982 NSPS]

Pollutant or pollutant property	Kg/kkg (or pounds per 1,000 lb) of product		
	Continuous dischargers		Non-continuous dischargers (annual average)
	Maximum for any 1 day	Average of daily values for 30 consecutive days	
BOD5	4.38exp(0.017x)	2.36exp(0.017x)	Average of daily values for 30 consecutive days divided by 1.91.
TSS	5.81exp(0.017x)	3.03exp(0.017x)	Average of daily values for 30 consecutive days divided by 1.90.
pH	(1)	(1)	(1)

x = percent sulfite pulp in final product.EXPSTB='00

[1] Within the range of 5.0 to 9.0 at all times.

(b) The following standards apply with respect to each new source fiber line that commences discharge after June 15, 1998.

(1) The following standards apply to all new sources in the calcium-, magnesium-, or sodium-based sulfite pulp segment:

SUBPART E

[Production of Calcium-, Magnesium-, or Sodium-based Sulfite Pulps]

Pollutant or pollutant property	NSPS			
	Continuous dischargers		Non-continuous dischargers	
	Maximum for any 1 day	Monthly average	Maximum for any 1 day	Annual average
AOX	<ML [a]	([b])	<ML [a]	([b])
COD	([c])	([c])	([c])	([c])

[a] "<ML" means less than the minimum level specified in § 430.01(i) for the particular pollutant.

[b] This regulation does not specify this type of limitation for this pollutant; however, permitting authorities may do so as appropriate.

[c] [Reserved]

(2)(i) The following standards apply to all new sources in the ammonium-based sulfite pulp segment:

SUBPART E—PRODUCTION OF AMMONIUM-BASED SULFITE PULPS

Pollutant or pollutant property	NSPS	
	Maximum for any 1 day	Monthly average
TCDD [a]	<ML [b]	([c])
TCDF [a]	<ML [b]	([c])
Chloroform [a]	([d])	([d])

SUBPART E—PRODUCTION OF AMMONIUM-BASED SULFITE PULPS—Continued

Pollutant or pollutant property	NSPS	
	Maximum for any 1 day	Monthly average
Trichlorosyringol [a]	<ML [b]	([c])
3,4,5-trichlorocatechol [a]	<ML [b]	([c])
3,4,6-trichlorocatechol [a]	<ML [b]	([c])
3,4,5-trichloroguaiacol [a]	<ML [b]	([c])
3,4,6-trichloroguaiacol [a]	<ML [b]	([c])
4,5,6-trichloroguaiacol [a]	<ML [b]	([c])
2,4,5-trichlorophenol [a]	<ML [b]	([c])
2,4,6-trichlorophenol [a]	<ML [b]	([c])
Tetrachlorocatechol [a]	<ML [b]	([c])
Tetrachloroguaiacol [a]	<ML [b]	([c])
2,3,4,6-tetrachlorophenol [a]	<ML [b]	([c])
Pentachlorophenol [a]	<ML [b]	([c])

	Continuous dischargers		Non-continuous dischargers	
	Maximum for any 1 day	Monthly average	Maximum for any 1 day	Annual average
AOX	([d])	([d])	([d])	([d])
COD	([d])	([d])	([d])	([d])

[a] These limitations do not apply with respect to fiber lines that use a TCF bleaching process as disclosed by the discharger in its permit application under 40 CFR 122.21(g)(3) and certified under 40 CFR 122.22.
[b] "<ML" means less than the minimum level specified in § 430.01(i) for the particular pollutant.
[c] This regulation does not specify this type of limitation for this pollutant; however, permitting authorities may do so as appropriate.
[d] [Reserved]

(ii) The following standards apply to all new sources in the ammonium-based sulfite pulp segment with respect to each fiber line that uses exclusively TCF bleaching processes, as disclosed by the discharger in its NPDES permit application under 40 CFR 122.21(g)(3) and certified under 40 CFR 122.22:

SUBPART E—PRODUCTION OF AMMONIUM-BASED SULFITE PULPS

Pollutant or pollutant property	NSPS (TCF)			
	Continuous dischargers		Non-continuous dischargers	
	Maximum for any 1 day	Monthly average	Maximum for any 1 day	Annual average
AOX	<ML [a]	([b])	<ML [a]	([b])
COD	([c])	([c])	([c])	([c])

[a] "<ML" means less than the minimum level specified in § 430.01(i) for the particular pollutant.
[b] This regulation does not specify this type of limitation for this pollutant; however, permitting authorities may do so as appropriate.
[c] [Reserved]

(3)(i) The following standards apply to all new sources in the specialty grade sulfite pulp segment:

SUBPART E—PRODUCTION OF SPECIALTY GRADE SULFITE PULPS

Pollutant or pollutant property	NSPS	
	Maximum for any 1 day	Monthly average
TCDD [a]	<ML [b]	([c])
TCDF [a]	<ML [b]	([c])
Chloroform [a]	([d])	([d])
Trichlorosyringol [a]	<ML [b]	([c])
3,4,5-trichlorocatechol [a]	<ML [b]	([c])
3,4,6-trichlorocatechol [a]	<ML [b]	([c])
3,4,5-trichloroguaiacol [a]	<ML [b]	([c])
3,4,6-trichloroguaiacol [a]	<ML [b]	([c])
4,5,6-trichloroguaiacol [a]	<ML [b]	([c])
2,4,5-trichlorophenol [a]	<ML [b]	([c])
2,4,6-trichlorophenol [a]	<ML [b]	([c])
Tetrachlorocatechol [a]	<ML [b]	([c])
Tetrachloroguaiacol	<ML [b]	([c])
2,3,4,6-tetrachlorophenol [a]	<ML [b]	([c])
Pentachlorophenol [a]	<ML [b]	([c])

	Continuous dischargers		Non-continuous dischargers	
	Maximum for any 1 day	Monthly average	Maximum for any 1 day	Annual average
AOX	([d])	([d])	([d])	([d])
COD	([d])	([d])	([d])	([d])

[a] These limitations do not apply with respect to fiber lines that use a TCF bleaching process as disclosed by the discharger in its permit application under 40 CFR 122.21(g)(3) and certified under 40 CFR 122.22.
[b] "<ML" means less than the minimum level specified in § 430.01(i) for the particular pollutant.
[c] This regulation does not specify this type of limitation for this pollutant; however, permitting authorities may do so as appropriate.
[d] [Reserved]

(ii) The following standards apply to all new sources within the specialty grade sulfite pulp segment with respect to each fiber line that uses exclusively TCF bleaching processes, as disclosed by the discharger in its NPDES permit application under 40 CFR 122.21(g)(3) and certified under 40 CFR 122.22:

SUBPART E—PRODUCTION OF SPECIALTY GRADE SULFITE PULPS

Pollutant or pollutant property	NSPS (TCF)			
	Continuous dischargers		Non-continuous dischargers	
	Maximum for any 1 day	Monthly average	Maximum for any 1 day	Annual average
AOX	<ML [a]	([b])	<ML [a]	([b])
COD	([c])	([c])	([c])	([c])

[a] "<ML" means less than the minimum level specified in § 430.01(i) for the particular pollutant.
[b] This regulation does not specify this type of limitation for this pollutant; however, permitting authorities may do so as appropriate.
[c] [Reserved]

(c) The following standards apply to each new source regardless of when it commenced discharge, unless it certifies to the permitting authority that it is not using these compounds as biocides. Also, for non-continuous dischargers, concentration limitations (mg/l) shall apply. Concentration limitations will only apply to non-continuous dischargers:

SUBPART E

[Supplemental NSPS]

Pollutant or pollutant property	Maximum for any 1 day	
	kg/kkg (or pounds per 1,000 lb) of product	Milligrams/liter
Pentachlorophenol	0.00058exp(0.017x)	((0.015)(9.12)exp(0.017x))/y
Trichlorophenol	0.0036exp(0.017x)	((0.094)(9.12)exp(0.017x))/y
x = percent sulfite pulp in final product.		
y = wastewater discharged in kgal per ton of product.		

(d) Pursuant to 40 CFR 122.44(i) and 122.45(h), a discharger must demonstrate compliance with the standards in paragraphs (b)(2) or (b)(3) of this section, as applicable, by monitoring for all pollutants (except for AOX, COD, BOD5, TSS, and pH) at the point where the wastewater containing those pollutants leaves the bleach plant. The permitting authority may impose effluent limitations and/or monitoring requirements on internal wastestreams for any other pollutants covered in this section as appropriate under 40 CFR 122.44(i) and 122.45(h).

§ 430.56 Pretreatment standards for existing sources (PSES).

Except as provided in 40 CFR 403.7 and 403.13, any existing source subject to this subpart that introduces pollutants into a publicly owned treatment works must comply with 40 CFR part 403 and must achieve the following pretreatment standards for existing sources (PSES).

(a) The following pretreatment standards must be attained on or before April 16, 2001.

(1) The following pretreatment standards apply to all indirect dischargers in the calcium-, magnesium-, or sodium-based sulfite pulp segment:

SUBPART E

[Production of Calcium-, Magnesium-, or Sodium-based Sulfite Pulps]

Pollutant or pollutant property	PSES	
	Maximum for any 1 day	Monthly average
AOX	<ML [a]	([b])

[a] "<ML" means less than the minimum level specified in § 430.01(i) for the particular pollutant.

[b] This regulation does not specify this type of limitation for this pollutant; however, pretreatment control authorities may do so as appropriate.

(2)(i) The following pretreatment standards apply to all indirect dischargers in the ammonium-based sulfite pulp segment:

SUBPART E—PRODUCTION OF AMMONIUM-BASED SULFITE PULPS

Pollutant or pollutant property	PSES	
	Maximum for any 1 day	Monthly average
TCDD [a]	<ML [b]	([c])
TCDF [a]	<ML [b]	([c])
Trichlorosyringol [a]	<ML [b]	([c])
3,4,5-trichlorocatechol [a]	<ML [b]	([c])
3,4,6-trichlorocatechol [a]	<ML [b]	([c])
3,4,5-trichloroguaiacol [a]	<ML [b]	([c])
3,4,6-trichloroguaiacol [a]	<ML [b]	([c])
4,5,6-trichloroguaiacol [a]	<ML [b]	([c])
2,4,5-trichlorophenol [a]	<ML [b]	([c])

SUBPART E—PRODUCTION OF AMMONIUM-BASED SULFITE PULPS—Continued

Pollutant or pollutant property	PSES	
	Maximum for any 1 day	Monthly average
2,4,6-trichlorophenol [a]	<ML [b]	([c])
Tetrachlorocatechol [a]	<ML [b]	([c])
Tetrachloroguaiacol [a]	<ML [b]	([c])
2,3,4,6-tetrachlorophenol [a]	<ML [b]	([c])
Pentachlorophenol [a]	<ML [b]	([c])

[a] These limitations do not apply with respect to fiber lines operated by any indirect discharger that discloses to the pretreatment control authority, at the time it submits the report required under 40 CFR 403.12(b), (d), or (e), that it uses a TCF bleaching process at that fiber line.
[b] "<ML" means less than the minimum level specified in § 430.01(i) for the particular pollutant.
[c] This regulation does not specify this type of limitation for this pollutant; however, pretreatment control authorities may do so as appropriate.

(ii) The following pretreatment standards apply with respect to each new source fiber line operated by an indirect discharger producing ammonium-based sulfite pulps if the indirect discharger discloses to the pretreatment control authority in a report submitted under 40 CFR 403.12(b) that it uses exclusively TCF bleaching processes at that fiber line:

SUBPART E—PRODUCTION OF AMMONIUM-BASED SULFITE PULPS

Pollutant or pollutant parameter	PSES (TCF)	
	Maximum for any 1 day	Monthly average
AOX	<ML [a]	([b])

[a] "<ML" means less than the minimum level specified in § 430.01(i) for the particular pollutant.
[b] This regulation does not specify this type of limitation for this pollutant; however, pretreatment control authorities may do so as appropriate.

(3)(i) The following pretreatment standards apply to all indirect dischargers in the specialty grade sulfite pulp segment:

SUBPART E—PRODUCTION OF SPECIALTY GRADE SULFITE PULPS

Pollutant or pollutant property	PSES	
	Maximum for any 1 day	Monthly average
TCDD [a]	<ML [b]	([c])
TCDF [a]	<ML [b]	([c])
Trichlorosyringol [a]	<ML [b]	([c])
3,4,5-trichlorocatechol [a]	<ML [b]	([c])
3,4,6-trichlorocatechol [a]	<ML [b]	([c])
3,4,5-trichloroguaiacol [a]	<ML [b]	([c])
3,4,6-trichloroguaiacol [a]	<ML [b]	([c])
4,5,6-trichloroguaiacol [a]	<ML [b]	([c])
2,4,5-trichlorophenol [a]	<ML [b]	([c])
2,4,6-Trichlorophenol [a]	<ML [b]	([c])
Tetrachlorocatechol [a]	<ML [b]	([c])
Tetrachloroguaiacol [a]	<ML [b]	([c])
2,3,4,6-tetrachlorophenol [a]	<ML [b]	([c])
Pentachlorophenol [a]	<ML [b]	([c])

[a] These limitations do not apply with respect to fiber lines operated by any indirect discharger that discloses to the pretreatment control authority, at the time it submits the report required under 40 CFR 403.12(b), (d), or (e), that it uses a TCF bleaching process at that fiber line.
[b] "<ML" means less than the minimum level specified in § 430.01(i) for the particular pollutant.
[c] This regulation does not specify this type of limitation for this pollutant; however, pretreatment control authorities may do so as appropriate.

(ii) The following pretreatment standards apply with respect to each fiber line operated by an indirect discharger producing specialty grade sulfite pulps if the indirect discharger discloses to the pretreatment control authority in a report submitted under 40 CFR 403.12(b), (d), or (e) that it uses exclusively TCF bleaching processes at that fiber line. These pretreatment standards must be attained on or before April 16, 2001:

SUBPART E

Pollutant or pollutant parameter	PSES (TCF)	
	Maximum for any 1 day	Monthly average
AOX	<ML [a]	([b])

[a] "<ML" means less than the minimum level specified in § 430.01(i) for the particular pollutant.
[b] This regulation does not specify this type of limitation for this pollutant; however, pretreatment control authorities may do so as appropriate.

(b) The following pretreatment standards apply to each indirect discharger, in accordance with the previous subcategorization scheme, unless it certifies to the pretreatment control authority that it is not using these compounds as biocides. In cases when POTWs find it necessary to impose mass effluent limitations, equivalent mass limitations are provided as guidance:

SUBPART E

Pollutant or pollutant property	Supplemental PSES	
	Maximum for any 1 day	
	kg/kkg (or pounds per 1,000 lb) of product	Milligrams/liter
Pentachlorophenol	0.00058exp(0.017x)	((0.011)(12.67)exp(0.017x))/y
Trichlorophenol	0.0043exp(0.017x)	((0.082)(12.67)exp(0.017x))/y
x = percent sulfite pulp in final product.		
y = wastewater discharged in kgal per ton of product.		

(c) An indirect discharger must demonstrate compliance with the pretreatment standards in paragraphs (a)(2) or (a)(3) of this section, as applicable, by monitoring for all pollutants at the point where the wastewater containing those pollutants leaves the bleach plant.

[63 FR 18635, Apr. 15, 1998; 63 FR 42239 Aug. 7, 1998]

§ 430.57 Pretreatment standards for new sources (PSNS).

Except as provided in 40 CFR 403.7, any new source subject to this subpart that introduces pollutants into a publicly owned treatment works must: comply with 40 CFR part 403; and achieve the following pretreatment standards for new sources (PSNS).

(a) (1) The following pretreatment standards apply to each indirect discharger in the calcium-,

magnesium-, or sodium-based sulfite pulp segment that is a new source:

SUBPART E

[Production of Calcium-, Magnesium-, or Sodium-Based Sulfite Pulps]

Pollutant or pollutant property	PSNS	
	Maximum for any 1 day	Monthly average
	kg/kkg (or pounds per 1,000 lb) of product	
AOX	<ML [a]	([b])

[a] "<ML" means less than the minimum level specified in § 430.01(i) for the particular pollutant.
[b] This regulation does not specify this type of limitation for this pollutant; however, pretreatment control authorities may do so as appropriate.

(2)(i) The following standards apply to each indirect discharger in the ammonium-based sulfite pulp segment that is a new source:

SUBPART E—PRODUCTION OF AMMONIUM-BASED SULFITE PULPS

Pollutant or pollutant property	PSNS	
	Maximum for any 1 day	Monthly average
TCDD [a]	<ML [b]	([c])
TCDF [a]	<ML [b]	([c])
Trichlorosyringol [a]	<ML [b]	([c])
3,4,5-trichlorocatechol [a]	<ML [b]	([c])
3,4,6-trichlorocatechol [a]	<ML [b]	([c])
3,4,5-trichloroguaiacol [a]	<ML [b]	([c])
3,4,6-trichloroguaiacol [a]	<ML [b]	([c])
4,5,6-trichloroguaiacol [a]	<ML [b]	([c])
2,4,5-trichlorophenol [a]	<ML [b]	([c])
2,4,6-trichlorophenol [a]	<ML [b]	([c])
Tetrachlorocatechol [a]	<ML [b]	([c])
Tetrachloroguaiacol [a]	<ML [b]	([c])
2,3,4,6-tetrachlorophenol [a]	<ML [b]	([c])
Pentachlorophenol [a]	<ML [b]	([c])

[a] These limitations do not apply with respect to fiber lines operated by any indirect discharger that discloses to the pretreatment control authority, at the time it submits the report required under 40 CFR 403.12 (b), (d), or (e), that it uses a TCF bleaching process at that fiber line.
[b] "<ML" means less than the minimum level specified in § 430.01(i) for the particular pollutant.
[c] This regulation does not specify this type of limitation for this pollutant; however, pretreatment control authorities may do so as appropriate.

(ii) The following pretreatment standards apply with respect to each new source fiber line operated by an indirect discharger producing ammonium-based sulfite pulps if the indirect discharger discloses to the pretreatment control authority in a report submitted under 40 CFR 403.12(b), (d), or (e) that it uses exclusively TCF bleaching processes at that fiber line:

SUBPART E—PRODUCTION OF AMMONIUM-BASED SULFITE PULPS

Pollutant or pollutant parameter	PSNS (TCF)	
	Maximum for any 1 day	Monthly average
AOX	<ML [a]	([b])

[a] "<ML" means less than the minimum level specified in § 430.01(i) for the particular pollutant.
[b] This regulation does not specify this type of limitation for this pollutant; however, pretreatment control authorities may do so as appropriate.

(3)(i) The following pretreatment standards apply to each indirect discharger in the specialty grade sulfite pulp segment that is a new source:

SUBPART E—PRODUCTION OF SPECIALTY GRADE SULFITE PULPS

Pollutant or pollutant property	PSNS	
	Maximum for any 1 day	Monthly average
TCDD [a]	<ML [b]	([c])
TCDF [a]	<ML [b]	([c])
Trichlorosyringol [a]	<ML [b]	([c])
3,4,5-trichlorocatechol [a]	<ML [b]	([c])
3,4,6-trichlorocatechol [a]	<ML [b]	([c])
3,4,5-trichloroguaiacol [a]	<ML [b]	([c])
3,4,6-trichloroguaiacol [a]	<ML [b]	([c])
4,5,6-trichloroguaiacol [a]	<ML [b]	([c])
2,4,5-trichlorophenol [a]	<ML [b]	([c])
2,4,6-trichlorophenol [a]	<ML [b]	([c])
Tetrachlorocatechol [a]	<ML [b]	([c])
Tetrachloroguaiacol [a]	<ML [b]	([c])
2,3,4,6-tetrachlorophenol [a]	<ML [b]	([c])
Pentachlorophenol [a]	<ML [b]	([c])

[a] These limitations do not apply with respect to fiber lines operated by any indirect discharger that discloses to the pretreatment control authority, at the time it submits the report required under 40 CFR 403.12 (b), (d), or (e), that it uses a TCF bleaching process at that fiber line.
[b] "<ML" means less than the minimum level specified in § 430.01(i) for the particular pollutant.
[c] This regulation does not specify this type of limitation for this pollutant; however, pretreatment control authorities may do so as appropriate.

(ii) The following pretreatment standards apply with respect to each new source fiber line operated by an indirect discharger producing specialty grade sulfite pulps if the indirect discharger discloses to the pretreatment control authority in a report submitted under 40 CFR 403.12(b), (d), or (e) that it uses exclusively TCF bleaching processes at that fiber line:

SUBPART E—PRODUCTION OF SPECIALTY GRADE SULFITE PULPS

Pollutant or pollutant parameter	PSNS (TCF)	
	Maximum for any 1 day	Monthly average
AOX	<ML [a]	([b])

[a] "<ML" means less than the minimum level specified in § 430.01(i) for the particular pollutant.
[b] This regulation does not specify this type of limitation for this pollutant; however, pretreatment control authorities may do so as appropriate.

(b) The following pretreatment standards shall apply to each new source indirect dischargers unless the indirect discharger certifies to the pretreatment control authority that it is not using these compounds as biocides. In cases when POTWs find it necessary to impose mass effluent standards, equivalent mass standards are provided as guidance:

SUBPART E

Pollutant or pollutant property	Supplemental PSNS	
	Maximum for any 1 day	
	kg/kkg (or pounds per 1,000 lb) of product	Milligrams/liter
Pentachlorophenol	0.00058exp (0.017x)	((0.015)(9.12)exp(0.017x))/y
Trichlorophenol	0.0043exp (0.017x)	((0.114)(9.12)exp(0.017x))/y
x = percent sulfite pulp in final product.		
y = wastewater discharged in kgal per ton of product.		

(c) An indirect discharger must demonstrate compliance with the pretreatment standards in paragraphs (a)(2) or (a)(3) of this section, as applicable, by monitoring for all pollutants at the point where the wastewater containing those pollutants leaves the bleach plant.

[63 FR 18635, Apr. 15, 1998; 63 FR 42240, Aug. 7, 1998]

§ 430.58 Best management practices (BMPs).

The definitions and requirements set forth in 40 CFR 430.03 apply to facilities in this subpart.

Subpart F—Semi-Chemical Subcategory

§ 430.60 Applicability; description of the semi-chemical subcategory.

The provisions of this subpart are applicable to discharges resulting from the integrated production of pulp and paper at semi-chemical mills.

§ 430.61 Specialized definitions.

For the purpose of this subpart, the general definitions, abbreviations, and methods of analysis set forth in 40 CFR part 401 and § 430.01 of this part shall apply to this subpart.

§ 430.62 Effluent limitations representing the degree of effluent reduction attainable by the application of the best practicable control technology currently available (BPT).

Except as provided in 40 CFR 125.30 through 125.32, any existing point source subject to this subpart must achieve the following effluent limitations representing the degree of effluent reduction attainable by the application of the best practicable control technology currently available (BPT):

SUBPART F

[BPT effluent limitations for ammonia base mills]

Pollutant or pollutant property	Kg/kkg (or pounds per 1,000 lb) of product	
	Maximum for any 1 day	Average of daily values for 30 consecutive days
BOD5	8.0	4.0
TSS	10.0	5.0
pH	(1)	(1)

1 Within the range of 6.0 to 9.0 at all times.

SUBPART F

[BPT effluent limitations for sodium base mills]

Pollutant or pollutant property	Kg/kkg (or pounds per 1,000 lb) of product	
	Maximum for any 1 day	Average of daily values for 30 consecutive days
BOD5	8.7	4.35
TSS	11.0	5.5
pH	(1)	(1)

1 Within the range of 6.0 to 9.0 at all times.

§ 430.63 Effluent limitations guidelines representing the degree of effluent reduction attainable by the application of the best conventional pollutant control technology (BCT).

Except as provided in 40 CFR 125.30 through 125.32, any existing point source subject to this subpart shall achieve the following effluent limitations representing the degree of effluent reduction attainable by the application of the best conventional pollutant control technology (BCT): The limitations shall be the same as those specified for conventional pollutants (which are defined in 40 CFR 401.16) in § 430.62 of this subpart for the best practicable control technology currently available (BPT), except that non-continuous dischargers shall not be subject to the maximum day and average-of-30-consecutive-days limitations, but shall be subject to annual average effluent limitations determined by dividing the average-of-30-consecutive-days limitations for BOD5 by 1.36 and TSS by 1.36.

§ 430.64 Effluent limitations representing the degree of effluent reduction attainable by the application of the best available technology economically achievable (BAT).

Except as provided in 40 CFR 125.30 through 125.32, any existing point source subject to this subpart where chlorophenolic-containing biocides are used must achieve the following effluent limitations representing the degree of effluent reduction attainable by the application of the best available technology economically achievable (BAT). Non-continuous dischargers shall not be subject to the maximum day mass limitations in kg/kkg (lb/1,000 lb), but shall be subject to concentration limitations. Concentration limitations are only applicable to non-continuous dischargers. Permittees not using chlorophenolic-containing biocides must certify to the permit-issuing authority that they are not using these biocides:

SUBPART F

Pollutant or pollutant property	BAT effluent limitations	
	Maximum for any 1 day	
	Kg/kkg (or pounds per 1,000 lb) of product	Milligrams/liter
Pentachlorophenol	0.0012	(0.029)(10.3)/y
Trichlorophenol	0.00043	(0.010)(10.3)/y
y = wastewater discharged in kgal per ton of product.		

§ 430.65 New source performance standards (NSPS).

Any new source subject to this subpart must achieve the following new source performance standards (NSPS), except that non-continuous dischargers shall not be subject to the maximum day and average of 30 consecutive days effluent limitations for BOD5 and TSS, but shall be subject to annual average effluent limitations. Also, for non-continuous dischargers, concentration limitations (mg/l) shall apply, where provided. Concentration limitations will only apply to non-continuous dischargers. Only facilities where chlorophenolic-containing biocides are used shall be subject to pentachlorophenol and trichlorophenol limitations. Permittees not using chlorophenolic-containing biocides must certify to the permit-issuing authority that they are not using these biocides:

SUBPART F

[NSPS]

Pollutant or pollutant property	Kg/kkg (or pounds per 1,000 lb) of product		
	Continuous dischargers		Non-continuous dischargers (annual average)
	Maximum for any 1 day	Average of daily values for 30 consecutive days	
BOD5	3.0	1.6	0.84
TSS	5.8	3.0	1.6
pH	(1)	(1)	(1)

	Maximum for any 1 day	
	Kg/kkg (or pounds per 1,000 lb) of product	Milligrams/liter
Pentachlorophenol	0.0012	(0.041)(7.3)/y
Trichlorophenol	0.00043	(0.014)(7.3)/y
y = wastewater discharged in kgal per ton at all times.		

[1] Within the range of 5.0 to 9.0 at all times.

§ 430.66 Pretreatment standards for existing sources (PSES).

Except as provided in 40 CFR 403.7 and 403.13, any existing source subject to this subpart that introduces pollutants into a publicly owned treatment works must: comply with 40 CFR part 403; and achieve the following pretreatment standards for existing sources (PSES) if it uses chlorophenolic-containing biocides. Permittees not using chlorophenolic-containing biocides must certify to the permit-issuing authority that they are not using these biocides. PSES must be attained on or before July 1, 1984:

SUBPART F

Pollutant or pollutant property	PSES	
	Maximum for any 1 day	
	Milligrams/liter	Kg/kkg (or pounds per 1,000 lb) of product [a]
Pentachlorophenol	(0.032)(10.3)/y	0.0014
Trichlorophenol	(0.010)(10.3)/y	0.00043
y = wastewater discharged in kgal per ton of product.		

[a] The following equivalent mass limitations are provided as guidance in cases when POTWs find it necessary to impose mass equivalent limitations.

§ 430.67 Pretreatment standards for new sources (PSNS).

Except as provided in 40 CFR 403.7, any new source subject to this subpart that introduces pollutants into a publicly owned treatment works must: comply with 40 CFR part 403; and achieve the following pretreatment standards for new sources (PSNS) if it uses chlorophenolic-containing biocides. Permittees not using chlorophenolic-containing biocides must certify to the permit-issuing authority that they are not using these biocides:

SUBPART F

Pollutant or pollutant property	PSNS	
	Maximum for any 1 day	
	Milligrams/liter	Kg/kkg (or pounds per 1,000 lb) of product [a]
Pentachlorophenol	(0.045)(7.3)/y	0.0014
Trichlorophenol	(0.014)(7.3)/y	0.00043
y = wastewater discharged in kgal per ton of product.		

[a] The following equivalent mass limitations are provided as guidance in cases when POTWs find it necessary to impose mass equivalent limitations.

Subpart G—Mechanical Pulp Subcategory

§ 430.70 Applicability; description of the mechanical pulp subcategory.

The provisions of this subpart are applicable to discharges resulting from: the production of pulp and paper at groundwood chemi-mechanical mills; the production of pulp and paper at groundwood mills through the application of the thermo-mechanical process; the integrated production of pulp and coarse paper, molded pulp products, and newsprint at groundwood mills; and the integrated production of pulp and fine paper at groundwood mills.

§ 430.71 Specialized definitions.

For the purpose of this subpart, the general definitions, abbreviations, and methods of analysis set forth in 40 CFR part 401 and § 430.01 of this part shall apply to this subpart.

§ 430.72 Effluent limitations representing the degree of effluent reduction attainable by the application of the best practicable control technology currently available (BPT).

(a) Except as provided in 40 CFR 125.30 through 125.32, any existing point source subject to this subpart must achieve the following effluent limitations representing the degree of effluent reduction attainable by the application of the best practicable control technology currently available (BPT), except that non-continuous dischargers shall not be subject to the maximum day and average of 30 consecutive days limitations but shall be subject to annual average effluent limitations:

SUBPART G

[BPT effluent limitations for mechanical pulp facilities where pulp and paper at groundwood chemi-mechanical mills are produced]

Pollutant or pollutant property	Kg/kkg (or pounds per 1,000 lb) of product		
	Continuous dischargers		Non-continuous dischargers (annual average)
	Maximum for any 1 day	Average of daily values for 30 consecutive days	
BOD5	13.5	7.05	3.96
TSS	19.75	10.65	5.85
pH	(1)	(1)	(1)

[1] Within the range of 5.0 to 9.0 at all times.

SUBPART G

[BPT effluent limitations for mechanical pulp facilities where pulp and paper at groundwood mills are produced through the application of the thermo-mechanical process]

Pollutant or pollutant property	Kg/kkg (or pounds per 1,000 lb) of product		
	Continuous dischargers		Non-continuous dischargers (annual average)
	Maximum for any 1 day	Average of daily values for 30 consecutive days	
BOD5	10.6	5.55	3.12
TSS	15.55	8.35	4.59
pH	(1)	(1)	(1)

1 Within the range of 5.0 to 9.0 at all times.

SUBPART G

[BPT effluent limitations for mechanical pulp facilities where the integrated production of pulp and coarse paper, molded pulp products, and newsprint at groundwood mills occurs]

Pollutant or pollutant property	Kg/kkg (or pounds per 1,000 lb) of product		
	Continuous dischargers		Non-continuous dischargers (annual average)
	Maximum for any 1 day	Average of daily values for 30 consecutive days	
BOD5	7.45	3.9	2.19
TSS	12.75	6.85	3.76
pH	(1)	(1)	(1)

1 Within the range of 5.0 to 9.0 at all times.

SUBPART G

[BPT effluent limitations for mechanical pulp facilities where the integrated production of pulp and fine paper at groundwood mills occurs]

Pollutant or pollutant property	Kg/kkg (or pounds per 1,000 lb) of product		
	Continuous dischargers		Non-continuous dischargers (annual average)
	Maximum for any 1 day	Average of daily values for 30 consecutive days	
BOD5	6.85	3.6	2.0
TSS	11.75	6.3	3.5
pH	(1)	(1)	(1)

1 Within the range of 5.0 to 9.0 at all times.

(b) The following limitations establish the quantity or quality of pollutants or pollutant properties, controlled by this section, resulting from the use of wet barking operations, which may be discharged by a point source subject to the provisions of this subpart. These limitations are in addition to the limitations set forth in paragraph (a) of this section and shall be calculated using the proportion of the mill's total production due to use of logs which are subject to such operations. Non-continuous dischargers shall not be subject to the maximum day and average of 30 consecutive days limitations, but shall be subject to annual average effluent limitations:

SUBPART G

[BPT effluent limitations for mechanical pulp facilities where pulp and paper at groundwood chemi-mechanical mills are produced]

Pollutant or pollutant property	Kg/kkg (or pounds per 1,000 lb) of product		
	Continuous dischargers		Non-continuous dischargers (annual average)
	Maximum for any 1 day	Average of daily values for 30 consecutive days	
BOD5	0.9	0.45	0.25
TSS	2.6	1.45	0.80
pH	(1)	(1)	(1)

[1] Within the range of 5.0 to 9.0 at all times.

SUBPART G

[BPT effluent limitations for mechanical pulp facilities where pulp and paper at groundwood mills are produced through the application of the thermo-mechanical process]

Pollutant or pollutant property	Kg/kkg (or pounds per 1,000 lb) of product		
	Continuous dischargers		Non-continuous dischargers (annual average)
	Maximum for any 1 day	Average of daily values for 30 consecutive days	
BOD5	0.9	0.45	0.3
TSS	2.7	1.45	0.75
pH	(1)	(1)	(1)

[1] Within the range of 5.0 to 9.0 at all times.

SUBPART G

[BPT effluent limitations for mechanical pulp facilities where the integrated production of pulp and coarse paper, molded pulp products, and newsprint at groundwood mills occurs]

Pollutant or pollutant property	Kg/kkg (or pounds per 1,000 lb) of product		
	Continuous dischargers		Non-continuous dischargers (annual average)
	Maximum for any 1 day	Average of daily values for 30 consecutive days	
BOD5	1.15	0.55	0.30
TSS	2.0	1.1	0.60
pH	(1)	(1)	(1)

[1] Within the range of 5.0 to 9.0 at all times.

SUBPART G

[BPT effluent limitations for mechanical pulp facilities where the integrated production of pulp and fine paper at groundwood mills occurs]

Pollutant or pollutant property	Kg/kkg (or pounds per 1,000 lb) of product		
	Continuous dischargers		Non-continuous dischargers (annual average)
	Maximum for any 1 day	Average of daily values for 30 consecutive days	
BOD5	1.1	0.55	0.35
TSS	1.95	1.1	0.60

SUBPART G—Continued

[BPT effluent limitations for mechanical pulp facilities where the integrated production of pulp and fine paper at groundwood mills occurs]

Pollutant or pollutant property	Kg/kkg (or pounds per 1,000 lb) of product		
	Continuous dischargers		Non-continuous dischargers (annual average)
	Maximum for any 1 day	Average of daily values for 30 consecutive days	
pH	(1)	(1)	(1)

1 Within the range of 5.0 to 9.0 at all times.

(c) The following limitations establish the quantity or quality of pollutants or pollutant parameters, controlled by this section, resulting from the use of log washing or chip washing operations, which may be discharged by a point source subject to the provisions of this subpart. These limitations are in addition to the limitations set forth in paragraph (a) of this section and shall be calculated using the proportion of the mill's total production due to use of logs and/or chips which are subject to such operations. Non-continuous dischargers shall not be subject to the maximum day and average of 30 consecutive days limitations, but shall be subject to the annual average effluent limitations:

SUBPART G

[BPT effluent limitations for mechanical pulp facilities where pulp and paper at groundwood chemi-mechanical mills are produced]

Pollutant or pollutant property	Kg/kkg (or pounds per 1,000 lb) of product		
	Continuous dischargers		Non-continuous dischargers (annual average)
	Maximum for any 1 day	Average of daily values for 30 consecutive days	
BOD5	0.05	0.05	0.05
TSS	0.25	0.15	0.10
pH	(1)	(1)	(1)

1 Within the range of 5.0 to 9.0 at all times.

SUBPART G

[BPT effluent limitations for mechanical pulp facilities where pulp and paper at groundwood mills are produced through the application of the thermo-mechanical process]

Pollutant or pollutant property	Kg/kkg (or pounds per 1,000 lb) of product		
	Continuous dischargers		Non-continuous dischargers (annual average)
	Maximum for any 1 day	Average of daily values for 30 consecutive days	
BOD5	0.05	0.05	0.05
TSS	0.30	0.15	0.05
pH	(1)	(1)	(1)

1 Within the range of 5.0 to 9.0 at all times.

SUBPART G

[BPT effluent limitations for mechanical pulp facilities where the integrated production of pulp and coarse paper, molded pulp products, and newsprint at groundwood mills occurs]

Pollutant or pollutant property	Kg/kkg (or pounds per 1,000 lb) of product		
	Continuous dischargers		Non-continuous dischargers (annual average)
	Maximum for any 1 day	Average of daily values for 30 consecutive days	
BOD5	0.15	0.05	0.05
TSS	0.20	0.15	0.10
pH	(1)	(1)	(1)

1 Within the range of 5.0 to 9.0 at all times.

SUBPART G

[BPT effluent limitations for mechanical pulp facilities where the integrated production of pulp and fine paper at groundwood mills occurs]

Pollutant or pollutant property	Kg/kkg (or pounds per 1,000 lb) of product		
	Continuous dischargers		Non-continuous dischargers (annual average)
	Maximum for any 1 day	Average of daily values for 30 consecutive days	
BOD5	0.15	0.05	0.05
TSS	0.2	0.15	0.10
pH	(1)	(1)	(1)

1 Within the range of 5.0 to 9.0 at all times.

(d) The following limitations establish the quantity or quality of pollutants or pollutant properties, controlled by this section, resulting from the use of log flumes or log ponds, which may be discharged by a point source subject to the provisions of this subpart. These limitations are in addition to the limitations set forth in paragraph (a) of this section and shall be calculated using the proportion of the mill's total production due to use of logs which are subject to such operations. Non-continuous dischargers shall not be subject to the maximum day and average of 30 consecutive days limitations but shall be subject to the annual average effluent limitations:

SUBPART G

[BPT effluent limitations for mechanical pulp facilities where pulp and paper at groundwood chemi-mechanical mills are produced]

Pollutant or pollutant property	Kg/kkg (or pounds per 1,000 lb) of product		
	Continuous dischargers		Non-continuous dischargers (annual average)
	Maximum for any 1 day	Average of daily values for 30 consecutive days	
BOD5	0.15	0.05	0.05
TSS	0.55	0.3	0.15
pH	(1)	(1)	(1)

1 Within the range of 5.0 to 9.0 at all times.

SUBPART G

[BPT effluent limitations for mechanical pulp facilities where pulp and paper at groundwood mills are produced through the application of the thermo-mechanical process]

Pollutant or pollutant property	Kg/kkg (or pounds per 1,000 lb) of product		
	Continuous dischargers		Non-continuous dischargers (annual average)
	Maximum for any 1 day	Average of daily values for 30 consecutive days	
BOD5	0.15	0.15	0.05
TSS	0.60	0.35	0.15
pH	(1)	(1)	(1)

1 Within the range of 5.0 to 9.0 at all times.

SUBPART G

[BPT effluent limitations for mechanical pulp facilities where the integrated production of pulp and coarse paper, molded pulp products, and newsprint at groundwood mills occurs]

Pollutant or pollutant property	Kg/kkg (or pounds per 1,000 lb) of product		
	Continuous dischargers		Non-continuous dischargers (annual average)
	Maximum for any 1 day	Average of daily values for 30 consecutive days	
BOD5	0.25	0.1	0.05
TSS	0.45	0.25	0.15
pH	(1)	(1)	(1)

1 Within the range of 5.0 to 9.0 at all times.

SUBPART G

[BPT effluent limitations for mechanical pulp facilities where the integrated production of pulp and fine paper at groundwood mills occurs]

Pollutant or pollutant property	Kg/kkg (or pounds per 1,000 lb) of product		
	Continuous dischargers		Non-continuous dischargers (annual average)
	Maximum for any 1 day	Average of daily values for 30 consecutive days	
BOD5	0.2	0.05	0.05
TSS	0.4	0.25	0.15
pH	(1)	(1)	(1)

1 Within the range of 5.0 to 9.0 at all times.

(e) For those mills using zinc hydrosulfite as a bleaching agent in the manufacturing process, the following effluent limitations are to be added to the base limitations set forth in paragraph (a) of this section. Permittees not using zinc hydrosulfite as a bleaching agent must certify to the permit issuing authority that they are not using this bleaching compound. Non-continuous dischargers shall not be subject to the maximum day and average of 30 consecutive days effluent limitations, but shall be subject to annual average effluent limitations:

SUBPART G

[BPT effluent limitations for mechanical pulp facilities where pulp and paper at groundwood chemi-mechanical mills are produced]

Pollutant or pollutant property	Kg/kkg (or pounds per 1,000 lb) of product		
	Continuous dischargers		Non-continuous dischargers (annual average)
	Maximum for any 1 day	Average of daily values for 30 consecutive days	
Zinc	0.34	0.17	0.11

SUBPART G

[BPT effluent limitations for mechanical pulp facilities where pulp and paper at groundwood mills are produced through the application of the thermo-mechanical process]

Pollutant or pollutant property	Kg/kkg (or pounds per 1,000 lb) of product		
	Continuous dischargers		Non-continuous dischargers (annual average)
	Maximum for any 1 day	Average of daily values for 30 consecutive days	
Zinc	0.26	0.13	0.09

SUBPART G

[BPT effluent limitations for mechanical pulp facilities where the integrated production of pulp and coarse paper, molded pulp products, and newsprint at groundwood mills occurs]

Pollutant or pollutant property	Kg/kkg (or pounds per 1,000 lb) of product		
	Continuous dischargers		Non-continuous dischargers (annual average)
	Maximum for any 1 day	Average of daily values for 30 consecutive days	
Zinc	0.30	0.15	0.10

SUBPART G

[BPT effluent limitations for mechanical pulp facilities where the integrated production of pulp and fine paper at groundwood mills occurs]

Pollutant or pollutant property	Kg/kkg (or pounds per 1,000 lb) of product		
	Continuous dischargers		Non-continuous dischargers (annual average)
	Maximum for any 1 day	Average of daily values for 30 consecutive days	
Zinc	0.275	0.135	0.090

§ 430.73 Effluent limitations guidelines representing the degree of effluent reduction attainable by the application of the best conventional pollutant control technology (BCT).

(a)(1) The following applies to: mechanical pulp facilities where the integrated production of pulp and coarse paper, molded pulp products, and newsprint at groundwood mills occurs; and mechanical pulp facilities where the integrated production of pulp and fine paper at groundwood mills occurs:

(2) Except as provided in 40 CFR 125.30 through 125.32, any existing point source subject to this subpart shall achieve the following effluent limitations representing the degree of effluent reduction attainable by the application of the best conventional pollutant control technology (BCT): The limitations shall be the same as those specified for conventional pollutants (which are defined in 40 CFR 401.16) in § 430.72 of this subpart for the best practicable control technology currently available (BPT).

(b) [Reserved]

§ 430.74 Effluent limitations representing the degree of effluent reduction attainable by the application of the best available technology economically achievable (BAT).

(a) The following applies to mechanical pulp facilities where pulp and paper at groundwood mills are produced through the application of the thermo-mechanical process; mechanical pulp facilities where the integrated production of pulp and coarse paper, molded pulp products, and newsprint at groundwood mills occurs; and mechanical pulp facilities where the integrated production of pulp and fine paper at groundwood mills occurs: except as provided in 40 CFR 125.30 through 125.32, any existing point source subject to this subpart must achieve the following effluent limitations representing the degree of effluent reduction attainable by the application of the best available technology economically achievable (BAT), except that non-continuous dischargers shall not be subject to the maximum day mass limitations in kg/kkg (lb/1000 lb), but shall be subject to concentration limitations. Concentration limitations are only applicable to non-continuous dischargers. Pentachlorophenol and trichlorophenol limitations are only applicable at facilities where chlorophenolic-containing biocides are used. Permittees not using chlorophenolic-containing biocides must certify to the permit-issuing authority that they are not using these biocides. Zinc limitations are only applicable at facilities where zinc hydrosulfite is used as a bleaching agent. Permittees not using zinc hydrosulfite as a bleaching agent must certify to the permit issuing authority that they are not using this bleaching compound:

SUBPART G

[BAT effluent limitations for mechanical pulp facilities where pulp and paper at groundwood mills are produced through the application of the thermo-mechanical process]

Pollutant or pollutant property	Maximum for any 1 day	
	Kg/kkg (or pounds per 1,000 lb) of product	Milligrams/liter
Pentachlorophenol	0.00097	(0.011)(21.1)/y
Trichlorophenol	0.00088	(0.010)(21.1)/y
Zinc	0.26	(3.0)(21.1)/y
y = wastewater discharged in kgal per ton of product.		

SUBPART G

[BAT effluent limitations for mechanical pulp facilities where the integrated production of pulp and coarse paper, molded pulp products, and newsprint at groundwood mills occurs]

Pollutant or pollutant property	Maximum for any 1 day	
	Kg/kkg (or pounds per 1,000 lb) of product	Milligrams/liter
Pentachlorophenol	0.0011	(0.011)(23.8)/y
Trichlorophenol	0.00099	(0.010)(23.8)/y
Zinc	0.30	(3.0)(23.8)/y
y = wastewater discharged in kgal per ton of product.		

SUBPART G

[BAT effluent limitations for mechanical pulp facilities where the integrated production of pulp and fine paper at groundwood mills occurs

Pollutant or pollutant property	Maximum for any 1 day	
	Kg/kkg (or pounds per 1,000 lb) of product	Milligrams/liter
Pentachlorophenol	0.0010	(0.011)(21.9)/y
Trichlorophenol	0.00092	(0.010)(21.9)/y
Zinc	0.27	(3.0)(21.9)/y
y = wastewater discharged in kgal per ton of product.		

(b) [Reserved]

§ 430.75 New source performance standards (NSPS).

(a) The following applies to mechanical pulp facilities where pulp and paper at groundwood mills are produced through the application of the thermo-mechanical process; mechanical pulp facilities where the integrated production of pulp and coarse paper, molded pulp products, and newsprint at groundwood mills occurs; and mechanical pulp facilities where the integrated production of pulp and fine paper at groundwood mills occurs: any new source subject to this subpart must achieve the following new source performance standards (NSPS), except that non-continuous dischargers shall not be subject to the maximum day and average of 30 consecutive days effluent limitations for BOD5 and TSS, but shall be subject to annual average effluent limitations. Also, for non-continuous dischargers, concentration limitations (mg/l) shall apply, where provided. Concentration limitations will only apply to non-continuous dischargers. Pentachlorophenol and trichlorophenol limitations are only applicable at facilities where chlorophenolic-containing biocides are used. Permittees not using chlorophenolic-containing biocides must certify to the permit-issuing authority that they are not using these biocides. Zinc limitations are only applicable at facilities where zinc hydrosulfite is used as a bleaching agent. Permittees not using zinc hydrosulfite as a bleaching agent must certify to the permit issuing authority that they are not using this bleaching compound:

SUBPART G

[NSPS for mechanical pulp facilities where pulp and paper at groundwood mills are produced through the application of the thermo-mechanical process]

Pollutant or pollutant property	Kg/kkg (or pounds per 1,000 lb) of product		
	Continuous dischargers		Non-continuous dischargers (annual average)
	Maximum for any 1 day	Average of daily values for 30 consecutive days	
BOD5	4.6	2.5	1.3
TSS	8.7	4.6	2.4
pH	(1)	(1)	(1)

	Maximum for any 1 day	
	Kg/kkg (or pounds per 1,000 lb) of product	Milligrams/liter
Pentachlorophenol	0.00097	(0.017)(13.8)/y
Trichlorophenol	0.00088	(0.015)(13.8)/y
Zinc	0.17	(3.0)(13.8)/y
y = wastewater discharged in kgal per ton at all times.		

[1] Within the range of 5.0 to 9.0 at all times.

SUBPART G

[NSPS for mechanical pulp facilities where the integrated production of pulp and coarse paper, molded pulp products, and newsprint at groundwood mills occurs]

Pollutant or pollutant property	Kg/kkg (or pounds per 1,000 lb) of product		
	Continuous dischargers		Non-continuous dischargers (annual average)
	Maximum for any 1 day	Average of daily values for 30 consecutive days	
BOD5	4.6	2.5	1.3
TSS	7.3	3.8	2.0
pH	(1)	(1)	(1)

	Maximum for any 1 day	
	Kg/kkg (or pounds per 1,000 lb) of product	Milligrams/liter
Pentachlorophenol	0.0011	(0.016)(16.8)/y
Trichlorophenol	0.00099	(0.014)(16.8)/y
Zinc	0.21	(3.0)(16.8)/y
y = wastewater discharged in kgal per ton at all times.		

[1] Within the range of 5.0 to 9.0 at all times.

SUBPART G

[NSPS mechanical pulp facilities where the integrated production of pulp and fine paper at groundwood mills occurs]

Pollutant or pollutant property	Kg/kkg (or pounds per 1,000 lb) of product		
	Continuous dischargers		Non-continuous dischargers (annual average)
	Maximum for any 1 day	Average of daily values for 30 consecutive days	
BOD5	3.5	1.9	0.99
TSS	5.8	3.0	1.58

SUBPART G—Continued

[NSPS mechanical pulp facilities where the integrated production of pulp and fine paper at groundwood mills occurs]

Pollutant or pollutant property	Kg/kkg (or pounds per 1,000 lb) of product		
	Continuous dischargers		Non-continuous dischargers (annual average)
	Maximum for any 1 day	Average of daily values for 30 consecutive days	
pH	(1)	(1)	(1)

	Maximum for any 1 day	
	Kg/kkg (or pounds per 1,000 lb) of product	Milligrams/liter
Pentachlorophenol	0.0010	(0.016) (15.4)/y
Trichlorophenol	0.00092	(0.014) (15.4)/y
Zinc	0.19	(3.0) (15.4)/y
y = wastewater discharged in kgal per ton at all times.		

[1] Within the range of 5.0 to 9.0 at all times.

(b) [Reserved]

§ 430.76 Pretreatment standards for existing sources (PSES).

(a) The following applies to mechanical pulp facilities where pulp and paper at groundwood mills are produced through the application of the thermo-mechanical process; mechanical pulp facilities where the integrated production of pulp and coarse paper, molded pulp products, and newsprint at groundwood mills occurs; and mechanical pulp facilities where the integrated production of pulp and fine paper at groundwood mills occurs: except as provided in 40 CFR 403.7 and 403.13, any existing source subject to this subpart that introduces pollutants into a publicly owned treatment works must comply with 40 CFR part 403 and achieve the following pretreatment standards for existing sources (PSES). Pentachlorophenol and trichlorophenol limitations are only applicable at facilities where chlorophenolic-containing biocides are used. Permittees not using chlorophenolic-containing biocides must certify to the permit-issuing authority that they are not using these biocides. Zinc limitations are only applicable at facilities where zinc hydrosulfite is used as a bleaching agent. Permittees not using zinc hydrosulfite as a bleaching agent must certify to the permit-issuing authority that they are not using this bleaching compound. PSES must be attained on or before July 1, 1984:

SUBPART G

[PSES for mechanical pulp facilities where pulp and paper at groundwood mills are produced through the application of the thermo-mechanical process]

Pollutant or pollutant property	Maximum for any 1 day	
	Milligrams/liter (mg/1)	Kg/kkg (or pounds per 1,000 1b) of product [a]
Pentachlorophenol	(0.011) (21.1)/y	0.00097
Trichlorophenol	(0.010) (21.1)/y	0.00088
Zinc	(3.0) (21.1)/y	0.26
y = wastewater discharged in kgal per ton of product.		

[a] The following equivalent mass limitations are provided as guidance in cases when POTWs find it necessary to impose mass effluent limitations.

SUBPART G

[PSES for mechanical pulp facilities where the integrated production of pulp and coarse paper, molded pulp products, and newsprint at groundwood mills occurs]

Pollutant or pollutant property	Maximum for any 1 day	
	Milligrams/liter (mg/1)	Kg/kkg (or pounds per 1,000 1b) of product [a]
Pentachlorophenol	(0.011) (23.8)/y	0.0011
Trichlorophenol	(0.010) (23.8)/y	0.00099
Zinc	(3.0) (23.8)/y	0.30
y = wasterwater discharged in kgal per ton of product.		

[a] The following equivalent mass limitations are provided as guidance in cases when POTWs find it necessary to impose mass effluent limitations.

SUBPART G

[PSNS for mechanical pulp facilities where the integrated production of pulp and fine paper at groundwood mills occurs]

Pollutant or pollutant property	Maximum for any 1 day	
	Milligrams/liter (mg/l)	Kg/kkg (or pounds per 1,000 lb) of product [a]
Pentachlorophenol	(0.011)(21.9)/y	0.0010
Trichlorophenol	(0.010)(21.9)/y	0.00092
Zinc	(3.0)(21.9)/y	0.27
y = wastewater discharged in kgal per ton of product.		

[a] The following equivalent mass limitations are provided as guidance in cases when POTWs find it necessary to impose mass effluent limitations.

(b) [Reserved]

§ 430.77 Pretreatment standards for new sources (PSNS).

(a) The following applies to mechanical pulp facilities where pulp and paper at groundwood mills are produced through the application of the thermo-mechanical process; mechanical pulp facilities where the integrated production of pulp and coarse paper, molded pulp products, and newsprint at groundwood mills occurs; and mechanical pulp facilities where the integrated production of pulp and fine paper at groundwood mills occurs: except as provided in 40 CFR 403.7, any new source subject to this subpart that introduces pollutants into a publicly owned treatment works must comply with 40 CFR part 403 and achieve the following pretreatment standards for new sources (PSNS). Pentachlorophenol and trichlorophenol limitations are only applicable at facilities where chlorophenolic-containing biocides are used. Permittees not using chlorophenolic-containing biocides must certify to the permit-issuing authority that they are not using these biocides. Zinc limitations are only applicable at facilities where zinc hydrosulfite is used as a bleaching agent. Permittees not using zinc hydrosulfite as a bleaching agent must certify to the permit issuing authority that they are not using this bleaching compound:

SUBPART G

[PSNS for mechanical pulp facilities where pulp and paper at groundwood mills are produced through the application of the thermo-mechanical process]

Pollutant or pollutant property	Maximum for any 1 day	
	Milligrams/liter (mg/l)	Kg/kkg (or pounds per 1,000 lb) of product [a]
Pentachlorophenol	(0.017)(13.8)/y	0.00097
Trichlorophenol	(0.015)(13.8)/y	0.00088
Zinc	(3.0)(13.8)/y	0.17

SUBPART G—Continued

[PSNS for mechanical pulp facilities where pulp and paper at groundwood mills are produced through the application of the thermo-mechanical process]

Pollutant or pollutant property	Maximum for any 1 day	
	Milligrams/liter (mg/l)	Kg/kkg (or pounds per 1,000 lb) of product [a]
y = wastewater discharged in kgal per ton of product.		

[a] The following equivalent mass limitations are provided as guidance in cases when POTWs find it necessary to impose mass effluent limitations.

SUBPART G

[PSNS for mechanical pulp facilities where the integrated production of pulp and coarse paper, molded pulp products, and newsprint at groundwood mills occurs]

Pollutant or pollutant property	Maximum for any 1 day	
	Milligrams/liter (mg/l)	Kg/kkg (or pounds per 1,000 lb) of product [a]
Pentachlorophenol	(0.016)(16.8)/y	0.0011
Trichlorophenol	(0.014)(16.8)/y	0.00099
Zinc	(3.0)(16.8)/y	0.21
y = wastewater discharged in kgal per ton of product.		

[a] The following equivalent mass limitations are provided as guidance in cases when POTWs find it necessary to impose mass effluent limitations.

SUBPART G

[PSNS for mechanical pulp facilities where the integrated production of pulp and fine paper at groundwood mills occurs]

Pollutant or pollutant property	Maximum for any 1 day	
	Milligrams/liter (mg/l)	Kg/kkg (or pounds per 1,000 lb) of product [a]
Pentachlorophenol	(0.016)(15.4)/y	0.0010
Trichlorophenol	(0.014)(15.4)/y	0.00092
Zinc	(3.0)(15.4)/y	0.19
y = wastewater discharged in kgal per ton of product.		

[a] The following equivalent mass limitations are provided as guidance in cases when POTWs find it necessary to impose mass effluent limitations.

(b) [Reserved]

Subpart H—Non-Wood Chemical Pulp Subcategory

§ 430.80 Applicability; description of the non-wood chemical pulp subcategory.

The provisions of this subpart are applicable to discharges resulting from the production of pulp and paper at non-wood chemical pulp mills. This subcategory includes, but is not limited to, mills producing non-wood pulps from chemical pulping processes such as kraft, sulfite, or soda.

§ 430.81 Specialized definitions.

The general definitions, abbreviations, and methods of analysis set forth in 40 CFR 401 and § 430.01 of this part shall apply to this subpart.

§ 430.82 Effluent limitations representing the degree of effluent reduction attainable by the application of best practicable control technology currently available (BPT). [Reserved]

§ 430.83 Effluent limitations representing the degree of effluent reduction attainable by the application of best conventional pollutant control technology (BCT). [Reserved]

§ 430.84 Effluent limitations representing the degree of effluent reduction attainable by the application of best available technology economically achievable (BAT). [Reserved]

§ 430.85 New source performance standards (NSPS). [Reserved]

§ 430.86 Pretreatment standards for existing sources (PSES). [Reserved]

§ 430.87 Pretreatment standards for new sources (PSNS). [Reserved]

Subpart I—Secondary Fiber Deink Subcategory

§ 430.90 Applicability; description of the secondary fiber deink subcategory.

The provisions of this subpart are applicable to discharges resulting from the integrated production of pulp and paper at deink mills.

§ 430.91 Specialized definitions.

For the purpose of this subpart, the general definitions, abbreviations, and methods of analysis set forth in 40 CFR part 401 and § 430.01 of this part shall apply to this subpart.

§ 430.92 Effluent limitations representing the degree of effluent reduction attainable by the application of the best practicable control technology currently available (BPT).

Except as provided in 40 CFR 125.30 through 125.32, any existing point source subject to this subpart must achieve the following effluent limitations representing the degree of effluent reduction attainable by the application of the best practicable control technology currently available (BPT), except that non-continuous dischargers shall not be subject to the maximum day and average of 30 consecutive days limitations but shall be subject to annual average effluent limitations:

SUBPART I

[BPT effluent limitations]

Pollutant or pollutant property	Kg/kkg (or pounds per 1,000 lb) of product		
	Continuous dischargers		Non-continuous dischargers (annual average)
	Maximum for any 1 day	Average of daily values for 30 consecutive days	
BOD5	18.1	9.4	5.3
TSS	24.05	12.95	7.12
pH	(1)	(1)	(1)

1 Within the range of 5.0 to 9.0 at all times.

§ 430.93 Effluent limitations guidelines representing the degree of effluent reduction attainable by the application of the best conventional pollutant control technology (BCT).

Except as provided in 40 CFR 125.30 through 125.32, any existing point source subject to this subpart shall achieve the following effluent limitations representing the degree of effluent reduction attainable by the application of the best conventional pollutant control technology (BCT): The limitations shall be the same as those

specified for conventional pollutants (which are defined in 40 CFR 401.16) in § 430.92 of this subpart for the best practicable control technology currently available (BPT).

§ 430.94 Effluent limitations representing the degree of effluent reduction attainable by the application of the best available technology economically achievable (BAT).

Except as provided in 40 CFR 125.30 through 125.32, any existing point source subject to this subpart where chlorophenolic-containing biocides are used must achieve the following effluent limitations representing the degree of effluent reduction attainable by the application of the best available technology economically achievable (BAT). Non-continuous dischargers shall not be subject to the maximum day mass limitations in kg/kkg (lb/1000 lb) but shall be subject to concentration limitations. Concentration limitations are only applicable to non-continuous dischargers. Permittees not using chlorophenolic-containing biocides must certify to the permit-issuing authority that they are not using these biocides:

SUBPART I

[Facilities where fine or tissue paper is produced]

Pollutant or pollutant property	BAT effluent limitations	
	Maximum for any 1 day	
	Kg/kkg (or pounds per 1,000 lb) of product	Milligrams/liter
Pentachlorophenol	0.0030	(0.029)(24.4)/y
Trichlorophenol	0.0069	(0.068)(24.4)/y
y = wastewater discharged in kgal per ton of product.		

SUBPART I

[Facilities where newsprint is produced]

Pollutant or pollutant property	BAT effluent limitations	
	Maximum for any 1 day	
	Kg/kkg (or pounds per 1,000 lb) of product	Milligrams/liter
Pentachlorophenol	0.0030	(0.029)(24.4)/y
Trichlorophenol	0.0010	(0.010)(24.4)/y
y = wastewater discharged in kgal per ton of product.		

§ 430.95 New source performance standards (NSPS).

Any new source subject to this subpart must achieve the following new source performance standards (NSPS), except that non-continuous dischargers shall not be subject to the maximum day and average of 30 consecutive days effluent limitations for BOD5 and TSS, but shall be subject to annual average effluent limitations. Also, for non-continuous dischargers, concentration limitations (mg/l) shall apply, where provided. Concentration limitations will only apply to non-continuous dischargers. Only facilities where chlorophenolic-containing biocides are used shall be subject to pentachlorophenol and trichlorophenol limitations. Permittees not using chlorophenolic-containing biocides must certify to the permit-issuing authority that they are not using these biocides:

SUBPART I

[Facilities where fine paper is produced]

[NSPS]

Pollutant or pollutant property	Kg/kkg (or pounds per 1,000 lb) of product		
	Continuous dischargers		Non-continuous dischargers (annual average)
	Maximum for any 1 day	Average of daily values for 30 consecutive days	
BOD5	5.7	3.1	1.6
TSS	8.7	4.6	2.4
pH	(1)	(1)	(1)

	Maximum for any 1 day	
	Kg/kkg (or pounds per 1,000 lb) of product	Milligrams/liter
Pentachlorophenol	0.0030	(0.045)(15.9)/y
Trichlorophenol	0.0069	(0.104)(15.9)/y
y = wastewater discharged in kgal per ton at all times.		

[1] Within the range of 5.0 to 9.0 at all times.

SUBPART I

[Facilities where tissue paper is produced]

[NSPS]

Pollutant or pollutant property	Kg/kkg (or pounds per 1,000 lb) of product		
	Continuous dischargers		Non-continuous dischargers (annual average)
	Maximum for any 1 day	Average of daily values for 30 consecutive days	
BOD5	9.6	5.2	2.72
TSS	13.1	6.8	3.58
pH	(1)	(1)	(1)

	Maximum for any 1 day	
	Kg/kkg (or pounds per 1,000 lb) of product	Milligrams/liter
Pentachlorophenol	0.0030	(0.036)(19.5)/y
Trichlorophenol	0.0069	(0.085)(19.5)/y
y = wastewater discharged in kgal per ton at all times.		

[1] Within the range of 5.0 to 9.0 at all times.

SUBPART I

[Facilities where newsprint is produced]

[NSPS]

Pollutant or pollutant property	Kg/kkg (or pounds per 1,000 lb) of product		
	Continuous dischargers		Non-continuous dischargers (annual average)
	Maximum for any 1 day	Average of daily values for 30 consecutive days	
BOD5	6.0	3.2	1.7
TSS	12.0	6.3	3.3

SUBPART I—Continued

[Facilities where newsprint is produced]

[NSPS]

Pollutant or pollutant property	Kg/kkg (or pounds per 1,000 lb) of product		
	Continuous dischargers		Non-continuous dischargers (annual average)
	Maximum for any 1 day	Average of daily values for 30 consecutive days	
pH	(1)	(1)	(1)

	Maximum for any 1 day	
	Kg/kkg (or pounds per 1,000 lb) of product	Milligrams/liter
Pentachlorophenol	0.0030	(0.044)(16.2)/y
Trichlorophenol	0.0010	(0.015)(16.2)/y
y = wastewater discharged in kgal per ton at all times.		

[1] Within the range of 5.0 to 9.0 at all times.

§ 430.96 Pretreatment standards for existing sources (PSES).

(a) Except as provided in 40 CFR 403.7 and 403.13, any existing source subject to this subpart that introduces pollutants into a publicly owned treatment works must comply with 40 CFR part 403 and achieve the following pretreatment standards for existing sources (PSES) if it uses chlorophenolic-containing biocides. Permittees not using chlorophenolic-containing biocides must certify to the permit-issuing authority that they are not using these biocides. PSES must be attained on or before July 1, 1984:

SUBPART I

[Facilities where fine or tissue paper is produced]

Pollutant or pollutant property	PSES	
	Maximum for any 1 day	
	Milligrams/liter (mg/l)	Kg/kkg (or pounds per 1,000 lb) of product [a]
Pentachlorophenol	(0.032)(24.4)/y	0.0033
Trichlorophenol	(0.082)(24.4)/y	0.0084
y = wastewater discharged in kgal per ton of product.		

[a] The following equivalent mass limitations are provided as guidance in cases when POTWs find it necessary to impose mass equivalent limitations.

SUBPART I

[Facilities where newsprint is produced]

Pollutant or pollutant property	PSES	
	Maximum for any 1 day	
	Milligrams/liter (mg/l)	Kg/kkg (or pounds per 1,000 lb) of product [a]
Pentachlorophenol	(0.032)(24.4)/y	0.0033
Trichlorophenol	(0.010)(24.4)/y	0.0010
y = wastewater discharged in kgal per ton of product.		

[a] The following equivalent mass limitations are provided as guidance in cases when POTWs find it necessary to impose mass equivalent limitations.

§ 430.97 Pretreatment standards for new sources (PSNS).

(a) Except as provided in 40 CFR 403.7, any new source subject to this subpart that introduces pollutants into a publicly owned treatment works must comply with 40 CFR part 403 and achieve the following pretreatment standards for new sources (PSNS) if it uses chlorophenolic-containing biocides. Permittees not using chlorophenolic-containing biocides must certify to the permit-issuing authority that they are not using these biocides:

SUBPART I

[Facilities where fine paper is produced]

Pollutant or pollutant property	PSNS	
	Maximum for any 1 day	
	Milligrams/liter (mg/l)	Kg/kkg (or pounds per 1,000 lb) of product [a]
Pentachlorophenol	(0.049)(15.9)/y	0.0033
Trichlorophenol	(0.126)(15.9)/y	0.0084
y = wastewater discharged in kgal per ton of product.		

[a] The following equivalent mass limitations are provided as guidance in cases when POTWs find it necessary to impose mass equivalent limitations.

SUBPART I

[Facilities where tissue paper is produced]

Pollutant or pollutant property	PSNS	
	Maximum for any 1 day	
	Milligrams/liter (mg/l)	Kg/kkg (or pounds per 1,000 lb) of product [a]
Pentachlorophenol	(0.040)(19.5)/y	0.0033
Trichlorophenol	(0.103)(19.5)/y	0.0084
y = wastewater discharged in kgal per ton of product.		

[a] The following equivalent mass limitations are provided as guidance in cases when POTWs find it necessary to impose mass equivalent limitations.

SUBPART I

[Facilities where newsprint is produced]

Pollutant or pollutant property	PSNS	
	Maximum for any 1 day	
	Milligrams/liter (mg/l)	Kg/kkg (or pounds per 1,000 lb) of product [a]
Pentachlorophenol	(0.048)(16.2)/y	0.0033
Trichlorophenol	(0.015)(16.2)/y	0.0010
y = wastewater discharged in kgal per ton of product.		

[a] The following equivalent mass limitations are provided as guidance in cases when POTWs find it necessary to impose mass equivalent limitations.

Subpart J—Secondary Fiber Non-Deink Subcategory

§ 430.100 Applicability; description of the secondary fiber non-deink subcategory.

The provisions of this subpart are applicable to discharges resulting from the production of: Paperboard from wastepaper; tissue paper from wastepaper without deinking at secondary fiber mills; molded products from wastepaper without deinking at secondary fiber mills; and builders' paper and roofing felt from wastepaper.

§ 430.101 Specialized definitions.

For the purpose of this subpart:

(a) Except as provided below, the general definitions, abbreviations, and methods of analysis set forth in 40 CFR part 401 and § 430.01 of this part shall apply to this subpart.

(b) Noncorrugating medium furnish subdivision mills are mills where recycled corrugating medium is not used in the production of paperboard.

(c) Corrugating medium furnish subdivision mills are mills where only recycled corrugating medium is used in the production of paperboard.

§ 430.102 Effluent limitations representing the degree of effluent reduction attainable by the application of the best practicable control technology currently available (BPT).

(a) Except as provided in 40 CFR 125.30 through 125.32, any existing point source subject to this subpart must achieve the following effluent limitations representing the degree of effluent reduction attainable by the application of the best practicable control technology currently available (BPT):

SUBPART J

[BPT effluent limitations for secondary fiber non-deink facilities where paperboard from wastepaper is produced—noncorrugating medium finish subdivision]

Pollutant or pollutant property	Kg/kkg (or pounds per 1,000 lb) of product	
	Maximum for any 1 day	Average of daily values for 30 consecutive days
BOD5	3.0	1.5
TSS	5.0	2.5
pH	(1)	(1)

[1] 1Within the range of 6.0 to 9.0 at all times.

SUBPART J

[BPT effluent limitations for secondary fiber non-deink facilities where paperboard from wastepaper is produced—corrugating medium finish subdivision]

Pollutant or pollutant property	Kg/kkg (or pounds per 1,000 lb) of product	
	Maximum for any 1 day	Average of daily values for 30 consecutive days
BOD5	5.7	2.8
TSS	9.2	4.6
pH	(1)	(1)

[1] Within the range of 6.0 to 9.0 at all times.

SUBPART J

[BPT effluent limitations for secondary fiber non-deink facilities where builders' paper and roofing felt from wastepaper are produced]

Pollutant or pollutant property	Kg/kkg (or pounds per 1,000 lb) of product	
	Maximum for any 1 day	Average of daily values for 30 consecutive days
BOD5	5.0	3.0
TSS	5.0	3.0
pH	(1)	(1)
Setteable Solids	(2)	(2)

[1] Within the range of 6.0 to 9.0 at all times.
[2] Not to exceed 0.2 ml/l.

(b) Except as provided in 40 CFR 125.30 through 125.32, any existing point source subject to this subpart must achieve the following effluent limitations representing the degree of effluent reduction attainable by the application of the best practicable control technology currently available (BPT), except that non-continuous dischargers shall not be subject to the maximum day and average of 30 consecutive days limitations but shall be subject to annual average effluent limitations:

SUBPART J

[BPT effluent limitations for secondary fiber non-deink facilities where tissue from wastepaper is produced without deinking]

Pollutant or pollutant property	Kg/kkg (or pounds per 1,000 lb) of product		
	Continuous dischargers		Non-continuous dischargers (annual average days)
	Maximum for any 1 day	Average of daily values for 30 consecutive days	
BOD5	13.7	7.1	4.0
TSS	17.05	9.2	5.1
pH	(1)	(1)	(1)

[1] Within the range of 5.0 to 9.0 at all times.

SUBPART J

[BPT effluent limitations for secondary fiber non-deink facilities where molded products from wastepaper are produced without deinking]

Pollutant or pollutant property	Kg/kkg (or pounds per 1,000 lb) of product		
	Continuous dischargers		Non-continuous dischargers (annual average days)
	Maximum for any 1 day	Average of daily values for 30 consecutive days	
BOD5	4.4	2.3	1.3
TSS	10.8	5.8	3.2
pH	(1)	(1)	(1)

[1] Within the range of 5.0 to 9.0 at all times.

§ 430.103 Effluent limitations guidelines representing the degree of effluent reduction attainable by the application of the best conventional pollutant control technology (BCT).

(a) Except as provided in 40 CFR 125.30 through 125.32, any existing point source subject to this subpart shall achieve the following effluent limitations representing the degree of effluent reduction attainable by the application of the best conventional pollutant control technology (BCT): The limitations shall be the same as those specified for conventional pollutants (which are defined in 40 CFR 401.16) in § 430.102 of this subpart for the best practicable control technology currently available (BPT).

(b) For secondary fiber non-deink facilities where paperboard from wastepaper is produced, non-continuous dischargers shall not be subject to the maximum day and average-of-30-consecutive-days limitations, but shall be subject to annual average effluent limitations determined by dividing the average-of-30-consecutive-days limitations for BOD5 and TSS by 1.77 and 2.18.

(c) For secondary fiber non-deink facilities where builders' paper and roofing felt from wastepaper are produced, non-continuous dischargers shall not be subject to the maximum day and average-of-30-consecutive-days limitations, but shall be subject to annual average effluent limitations determined by dividing the average-of-30-consecutive-days limitations for BOD5 and TSS by 1.90 and 1.90.

§ 430.104 Effluent limitations representing the degree of effluent reduction attainable by the application of the best available technology economically achievable (BAT).

Except as provided in 40 CFR 125.30 through 125.32, any existing point source subject to this subpart where chlorophenolic-containing biocides are used must achieve the following effluent limitations representing the degree of effluent reduction attainable by the application of the best available technology economically achievable (BAT). Non-continuous dischargers shall not be subject to the maximum day mass limitations in kg/kkg (lb/1000 lb) but shall be subject to concentration limitations. Concentration limitations are only applicable to non-continuous dischargers. Permittees not using chlorophenolic-containing biocides must certify to the permit-issuing authority that they are not using these biocides:

SUBPART J

[BAT effluent limitations for secondary fiber non-deink facilities where paperboard from wastepaper is produced]

Pollutant or pollutant property	Maximum for any 1 day	
	Kg/kkg (or pounds per 1,000 lb) of product	Milligrams/liter
Pentachlorophenol	0.00087	(0.029)(7.2)/y
Trichlorophenol	0.00030	(0.010)(7.2)/y
y = wastewater discharged in kgal per ton of product.		

SUBPART J

[BAT effluent limitations for secondary fiber non-deink facilities where builders' paper and roofing felt from wastepaper are produced]

Pollutant or pollutant property	Maximum for any 1 day	
	Kg/kkg (or pounds per 1,000 lb) of product	Milligrams/liter
Pentachlorophenol	0.0017	(0.029)(14.4)/y
Trichlorophenol	0.00060	(0.010)(14.4)/y
y = wastewater discharged in kgal per ton of product.		

SUBPART J

[BAT effluent limitations for secondary fiber non-deink facilities where tissue from wastepaper is produced without deinking]

Pollutant or pollutant property	Maximum for any 1 day	
	Kg/kkg (or pounds per 1,000 lb) of product	Milligrams/liter
Pentachlorophenol	0.0030	(0.029)(25.2)/y
Trichlorophenol	0.0011	(0.010)(25.2)/y
y = wastewater discharged in kgal per ton of product.		

SUBPART J

[BAT effluent limitations for secondary fiber non-deink facilities where molded products from wastepaper are produced without deinking]

Pollutant or pollutant property	Maximum for any 1 day	
	Kg/kkg (or pounds per 1,000 lb) of product	Milligrams/liter
Pentachlorophenol	0.0026	(0.029)(21.1)/y
Trichlorophenol	0.00088	(0.010)(21.1)/y
y = wastewater discharged in kgal per ton of product.		

§ 430.105 New source performance standards (NSPS).

Any new source subject to this subpart must achieve the following new source performance standards (NSPS), except that non-continuous dischargers shall not be subject to the maximum day and average of 30 consecutive days effluent limitations for BOD5 and TSS, but shall be subject to annual average effluent limitations. Also, for non-continuous dischargers, concentration limitations (mg/l) shall apply, where provided. Concentration limitations will only apply to non-continuous dischargers. Only facilities where chlorophenolic-containing biocides are used shall be subject to pentachlorophenol and trichlorophenol limitations. Permittees not using chlorophenolic-containing biocides must certify to the permit-issuing authority that they are not using these biocides:

SUBPART J

[NSPS for secondary fiber non-deink facilities where paperboard from wastepaper is produced—noncorrugating medium furnish subdivision]

Pollutant or pollutant property	Kg/kkg (or pounds per 1,000 lb) of product		
	Continuous dischargers		Non-continuous dischargers (annual average)
	Maximum for any 1 day	Average of daily values for 30 consecutive days	
BOD5	2.6	1.4	0.73
TSS	3.5	1.8	0.95
pH	(1)	(1)	(1)

	Maximum for any 1 day	
	Kg/kkg (or pounds per 1,000 lb) of product	Milligrams/liter
Pentachlorophenol	0.00087	(0.065)(3.2)/y
Trichlorophenol	0.00030	(0.023)(3.2)/y

	Maximum for any 1 day	
	Kg/kkg (or pounds per 1,000 lb) of product	Milligrams/liter
y = wastewater discharged in kgal per ton at all times.		

[1] Within the range of 5.0 to 9.0 at all times.

SUBPART J

[NSPS for secondary fiber non-deink facilities where paperboard from wastepaper is produced—corrugating medium finish subdivision]

Pollutant or pollutant property	Kg/kkg (or pounds per 1,000 lb) of product		
	Continuous dischargers		Non-continuous dischargers (annual average)
	Maximum for any 1 day	Average of daily values for 30 consecutive days	
BOD5	3.9	2.1	1.1
TSS	4.4	2.3	1.2
pH	([1])	([1])	([1])

	Maximum for any 1 day	
	Kg/kkg (or pounds per 1,000 lb) of product	Milligrams/liter
Pentachlorophenol	0.00087	(0.065)(3.2)/y
Trichlorophenol	0.00030	(0.023)(3.2)/y
y = wastewater discharged in kgal per ton at all times.		

[1] Within the range of 5.0 to 9.0 at all times.

SUBPART J

[NSPS for secondary fiber non-deink facilities where builders' paper and roofing felt from wastepaper are produced]

Pollutant or pollutant property	Kg/kkg (or pounds per 1,000 lb) of product		
	Continuous dischargers		Non-continuous dischargers (annual average)
	Maximum for any 1 day	Average of daily values for 30 consecutive days	
BOD5	1.7	0.94	0.49
TSS	2.7	1.40	0.74
pH	([1])	([1])	([1])

	Maximum for any 1 day	
	Kg/kkg (or pounds per 1,000 lb) of product	Milligrams/liter
Pentachlorophenol	0.0017	(0.155)(2.7)/y
Trichlorophenol	0.00060	(0.053)(2.7)/y
y = wastewater discharged in kgal per ton at all times.		

[1] Within the range of 5.0 to 9.0 at all times.

SUBPART J

[NSPS for secondary fiber non-deink facilities where tissue from wastepaper is produced without deinking]

Pollutant or pollutant property	Kg/kkg (or pounds per 1,000 lb) of product		
	Continuous dischargers		Non-continuous dischargers (annual average)
	Maximum for any 1 day	Average of daily values for 30 consecutive days	
BOD5	4.6	2.5	1.3
TSS	10.2	5.3	2.8
pH	(1)	(1)	(1)

	Maximum for any 1 day	
	Kg/kkg (or pounds per 1,000 lb) of product	Milligrams/liter
Pentachlorophenol	0.0030	(0.045)(16.3)/y
Trichlorophenol	0.0011	(0.015)(16.3)/y
y = wastewater discharged in kgal per ton at all times.		

[1] Within the range of 5.0 to 9.0 at all times.

SUBPART J

[NSPS for secondary fiber non-deink facilities where molded products from wastepaper are produced without deinking]

Pollutant or pollutant property	Kg/kkg (or pounds per 1,000 lb) of product		
	Continuous dischargers		Non-continuous dischargers (annual average)
	Maximum for any 1 day	Average of daily values for 30 consecutive days	
BOD5	2.1	1.1	0.58
TSS	4.4	2.3	1.21
pH	(1)	(1)	(1)

	Maximum for any 1 day	
	Kg/kkg (or pounds per 1,000 lb) of product	Milligrams/liter
Pentachlorophenol	0.0026	(0.107)(5.7)/y
Trichlorophenol	0.00088	(0.037)(5.7)/y
y = wastewater discharged in kgal per ton at all times.		

[1] Within the range of 5.0 to 9.0 at all times.

§ 430.106 Pretreatment standards for existing sources (PSES).

Except as provided in 40 CFR 403.7 and 403.13, any existing source subject to this subpart that introduces pollutants into a publicly owned treatment works must: Comply with 40 CFR part 403; and achieve the following pretreatment standards for existing sources (PSES) if it uses chlorophenolic-containing biocides. Permittees not using chlorophenolic-containing biocides must certify to the permit-issuing authority that they are not using these biocides. PSES must be attained on or before July 1, 1984:

SUBPART J

[PSES for secondary fiber non-deink facilities where paperboard from wastepaper is produced]

Pollutant or pollutant property	Maximum for any 1 day	
	Milligrams/liter (mg/l)	Kg/kkg (or pounds per 1,000 lb) of product[a]
Pentachlorophenol	(0.032)(7.2)/y	0.00096
Trichlorophenol	(0.010)(7.2)/y	0.00030
y = wastewater discharged in kgal per ton of product.		

[a] The following equivalent mass limitations are provided as guidance in cases when POTWs find it necessary to impose mass effluent limitations.

SUBPART J

[PSES for secondary fiber non-deink facilities where builders' paper and roofing felt from wastepaper are produced]

Pollutant or pollutant property	Maximum for any 1 day	
	Milligrams/liter (mg/l)	Kg/kkg (or pounds per 1,000 lb) of product[a]
Pentachlorophenol	(0.032)(14.4)y	0.0019
Trichlorophenol	(0.010)(14.4)y	0.00060
y = wastewater discharged in kgal per ton of product.		

[a] The following equivalent mass limitations are provided as guidance in cases when POTWs find it necessary to impose mass effluent limitations.

SUBPART J

[PSES for secondary fiber non-deink facilities where tissue from wastepaper is produced without deinking]

Pollutant or pollutant property	Maximum for any 1 day	
	Milligrams/liter (mg/l)	Kg/kkg (or pounds per 1,000 lb) of product[a]
Pentachlorophenol	(0.032)(25.2)y	0.0034
Trichlorophenol	(0.010)(25.2)/y	0.0011
y = wastewater discharged in kgal per ton of product.		

[a] The following equivalent mass limitations are provided as guidance in cases when POTWs find it necessary to impose mass effluent limitations.

SUBPART J

[PSES for secondary fiber non-deink facilities where molded products from wastepaper are produced without deinking]

Pollutant or pollutant property	Maximum for any 1 day	
	Milligrams/liter (mg/l)	Kg/kkg (or pounds per 1,000 lb) of product[a]
Pentachlorophenol	(0.032)(21.1)y	0.0028
Trichlorophenol	(0.010)(21.1)y	0.00088
y = wastewater discharged in kgal per ton of product.		

[a] The following equivalent mass limitations are provided as guidance in cases when POTWs find it necessary to impose mass effluent limitations.

§ 430.107 Pretreatment standards for new sources (PSNS).

Except as provided in 40 CFR 403.7, any new source subject to this subpart that introduces pollutants into a publicly owned treatment works must: Comply with 40 CFR part 403; and achieve the following pretreatment standards for new sources (PSNS) if it uses chlorophenolic-containing biocides. Permittees not using chlorophenolic-containing biocides

must certify to the permit-issuing authority that they are not using these biocides:

SUBPART J

[PSNS for secondary fiber non-deink facilities where paperboard from wastepaper is produced]

Pollutant or pollutant property	Maximum for any 1 day	
	Milligrams/liter (mg/l)	Kg/kkg (or pounds per 1,000 lb) of product [a]
Pentachlorophenol	(0.072)(3.2)/y	0.00096
Trichlorophenol	(0.023)(3.2)/y	0.00030
y = wastewater discharged in kgal per ton of product.		

[a] The following equivalent mass limitations are provided as guidance in cases when POTWs find it necessary to impose mass effluent limitations.

SUBPART J

[PSNS for secondary fiber non-deink facilities where builders' paper and roofing felt from wastepaper are produced]

Pollutant or pollutant property	Maximum for any 1 day	
	Milligrams/liter (mg/l)	Kg/kkg (or pounds per 1,000 lb) of product [a]
Pentachlorophenol	(0.171)(2.7)/y	0.0019
Trichlorophenol	(0.053)(2.7)/y	0.00060
y = wastewater discharged in kgal per ton of product.		

[a] The following equivalent mass limitations are provided as guidance in cases when POTWs find it necessary to impose mass effluent limitations.

SUBPART J

[PSNS for secondary fiber non-deink facilities where tissue from wastepaper is produced without deinking]

Pollutant or pollutant property	Maximum for any 1 day	
	Milligrams/liter (mg/l)	Kg/kkg (or pounds per 1,000 lb) of product [a]
Pentachlorophenol	(0.049)(16.3)/y	0.0034
Trichlorophenol	(0.015)(16.3)/y	0.0011
y = wastewater discharged in kgal per ton of product.		

[a] The following equivalent mass limitations are provided as guidance in cases when POTWs find it necessary to impose mass effluent limitations.

SUBPART J

[PSNS for secondary fiber non-deink facilities where molded products from wastepaper are produced without deinking]

Pollutant or pollutant property	Maximum for any 1 day	
	Milligrams/liter (mg/l)	Kg/kkg (or pounds per 1,000 lb) of product [a]
Pentachlorophenol	(0.118)(5.7)/y	0.0028
Trichlorophenol	(0.037)(5.7)/y	0.00088
y = wastewater discharged in kgal per ton of product.		

[a] The following equivalent mass limitations are provided as guidance in cases when POTWs find it necessary to impose mass effluent limitations.

Subpart K—Fine and Lightweight Papers from Purchased Pulp Subcategory

§ 430.110 Applicability; description of the fine and lightweight papers from purchased pulp subcategory.

The provisions of this subpart are applicable to discharges resulting from the production of: fine paper at nonintegrated mills; and lightweight paper at nonintegrated mills.

§ 430.111 Specialized definitions.

For the purpose of this subpart:

(a) Except as provided in paragraphs (b) and (c) of this section, the general definitions, abbreviations, and methods of analysis set forth in 40 CFR part 401 and § 430.01 of this part shall apply to this subpart.

(b) Cotton fiber furnish subdivision mills are those mills where significant quantities of cotton fibers (equal to or greater than 4 percent of the total product) are used in the production of fine papers.

(c) Wood fiber furnish subdivision mills are those mills where cotton fibers are not used in the production of fine papers.

§ 430.112 Effluent limitations representing the degree of effluent reduction attainable by the application of the best practicable control technology currently available (BPT).

Except as provided in 40 CFR 125.30 through 125.32, any existing point source subject to this subpart must achieve the following effluent limitations representing the degree of effluent reduction attainable by the application of the best practicable control technology currently available (BPT), except that non-continuous dischargers shall not be subject to the maximum day and average of 30 consecutive days limitations but shall be subject to annual average effluent limitations:

SUBPART K

[BPT effluent limitations for non-integrated mills where fine paper is produced from purchased pulp—wood fiber furnish subdivision]

Pollutant or pollutant property	Kg/kkg (or pounds per 1,000 lb) of product		
	Continuous dischargers		Non-continuous dischargers (annual average)
	Maximum for any 1 day	Average of daily values for 30 consecutive days	
BOD5	8.2	4.25	2.4
TSS	11.0	5.9	3.2
pH	(1)	(1)	(1)

1 Within the range of 5.0 to 9.0 at all times.

SUBPART K

[BPT effluent limitations for non-integrated mills where fine paper is produced from purchased pulp—cotton fiber furnish subdivision]

Pollutant or pollutant property	Kg/kkg (or pounds per 1,000 lb) of product		
	Continuous dischargers		Non-continuous dischargers (annual average)
	Maximum for any 1 day	Average of daily values for 30 consecutive days	
BOD5	17.4	9.1	5.1
TSS	24.3	13.1	7.2
pH	(1)	(1)	(1)

1 Within the range of 5.0 to 9.0 at all times.

SUBPART K

[BPT effluent limitations for non-integrated mills where lightweight papers are produced from purchased pulp]

Pollutant or pollutant property	Kg/kkg (or pounds per 1,000 lb) of product		
	Continuous dischargers		Non-continuous dischargers (annual average)
	Maximum for any 1 day	Average of daily values for 30 consecutive days	
BOD5	24.1	13.2	7.37
TSS	21.6	10.6	6.0
pH	(1)	(1)	(1)

[1] Within the range of 5.0 to 9.0 at all times.

SUBPART K

[BPT effluent limitations for non-integrated mills where lightweight papers are produced from purchased pulp— electrical grade papers subdivision

Pollutant or pollutant property	Kg/kkg (or pounds per 1,000 lb) of product		
	Continuous dischargers		Non-continuous dischargers (annual average)
	Maximum for any 1 day	Average of daily values for 30 consecutive days	
BOD5	38.0	20.9	11.7
TSS	34.2	16.7	9.5
pH	(1)	(1)	(1)

[1] Within the range of 5.0 to 9.0 at all times.

§ 430.113 Effluent limitations guidelines representing the degree of effluent reduction attainable by the application of the best conventional pollutant control technology (BCT).

Except as provided in 40 CFR 125.30 through 125.32, any existing point source subject to this subpart shall achieve the following effluent limitations representing the degree of effluent reduction attainable by the application of the best conventional pollutant control technology (BCT): The limitations shall be the same as those specified for conventional pollutants (which are defined in 40 CFR 401.16) in § 430.102 of this subpart for the best practicable control technology currently available (BPT).

§ 430.114 Effluent limitations representing the degree of effluent reduction attainable by the application of the best available technology economically achievable (BAT).

Except as provided in 40 CFR 125.30 through 125.32, any existing point source subject to this subpart where chlorophenolic-containing biocides are used must achieve the following effluent limitations representing the degree of effluent reduction attainable by the application of the best available technology economically achievable (BAT). Non-continuous dischargers shall not be subject to the maximum day mass limitations in kg/kkg (lb/1000 lb) but shall be subject to concentration limitations. Concentration limitations are only applicable to non-continuous dischargers. Permittees not using chlorophenolic-containing biocides must certify to the permit-issuing authority that they are not using these biocides:

SUBPART K

[BAT effluent limitations for non-integrated mills where fine paper is produced from purchased pulp—wood fiber furnish subdivision]

Pollutant or pollutant property	Maximum for any 1 day	
	Kg/kkg (or pounds per 1,000 lb) of product	Milligrams/liter
Pentachlorophenol	0.0018	(0.029)(15.2)/y
Trichlorophenol	0.00064	(0.010)(15.2)/y
y = wastewater discharged in kgal per ton of product.		

SUBPART K

[BAT effluent limitations for non-integrated mills where fine paper is produced from purchased pulp—cotton fiber furnish subdivision]

Pollutant or pollutant property	Maximum for any 1 day	
	Kg/kkg (or pounds per 1,000 lb) of product	Milligrams/liter
Pentachlorophenol	0.0051	(0.029)(42.3)/y
Trichlorophenol	0.0018	(0.010)(42.3)/y
y = wastewater discharged in kgal per ton of product.		

SUBPART K

[BAT effluent limitations for non-integrated mills where lightweight papers are produced from purchased pulp]

Pollutant or pollutant property	Maximum for any 1 day	
	Kg/kkg (or pounds per 1,000 lb) of product	Milligrams/liter
Pentachlorophenol	0.0059	(0.029)(48.7)/y
Trichlorophenol	0.0020	(0.010)(48.7)/y
y = wastewater discharged in kgal per ton of product.		

SUBPART K

[BAT effluent limitations for non-integrated mills where lightweight papers are produced from purchased pulp—electrical grade papers subdivision]

Pollutant or pollutant property	Maximum for any 1 day	
	Kg/kkg (or pounds per 1,000 lb) of product	Milligrams/liter
Pentachlorophenol	0.0093	(0.029)(76.9)/y
Trichlorophenol	0.0032	(0.010)(76.9)/y
y = wastewater discharged in kgal per ton of product.		

§ 430.115 New source performance standards (NSPS).

Any new source subject to this subpart must achieve the following new source performance standards (NSPS), except that non-continuous dischargers shall not be subject to the maximum day and average of 30 consecutive days effluent limitations for BOD5 and TSS, but shall be subject to annual average effluent limitations. Also, for non-continuous dischargers, concentration limitations (mg/l) shall apply, where provided. Concentration limitations will only apply to non-continuous dischargers. Only facilities where chlorophenolic-containing biocides are used shall be subject to pentachlorophenol and trichlorophenol limitations. Permittees not using chlorophenolic-containing biocides

must certify to the permit-issuing authority that they are not using these biocides:

SUBPART K

[NSPS for non-integrated mills where fine paper is produced from purchased pulp—wood fiber furnish subdivision]

Pollutant or pollutant property	Kg/kkg (or pounds per 1,000 lb) of product		
	Continuous dischargers		Non-continuous dischargers (Annual average)
	Maximum for any 1 day	Average of daily values for 30 consecutive days	
BOD5	3.5	1.9	1.0
TSS	4.4	2.3	1.2
pH	(1)	(1)	(1)

	Maximum for any 1 day	
	Kg/kkg (or pounds per 1,000 lb) of product	Milligrams/liter
Pentachlorophenol	0.0018	(0.047)(9.4)/y
Trichlorophenol	0.00064	(0.016)(9.4)/y
y=wastewater discharged in kgal per ton at all times.		

[1] Within the range of 5.0 to 9.0 at all times.

SUBPART K

[NSPS for non-integrated mills where fine paper is produced from purchased pulp—cotton fiber furnish subdivision]

Pollutant or pollutant property	Kg/kkg (or pounds per 1,000 lb) of product		
	Continuous dischargers		Non-continuous dischargers (annual average)
	Maximum for any 1 day	Average of daily values for 30 consecutive days	
BOD5	7.8	4.2	2.2
TSS	9.5	4.9	2.6
pH	(1)	(1)	(1)

	Maximum for any 1 day	
	Kg/kkg (or pounds per 1,000 lb) of product	Milligrams/liter
Pentachlorophenol	0.0051	(0.039)(31.1)/y
Trichlorophenol	0.0018	(0.014)(31.1)/y
y = wastewater discharged in kgal per ton at all times.		

[1] Within the range of 5.0 to 9.0 at all times.

SUBPART K

[NSPS for non-integrated mills where lightweight papers are produced from purchased pulp]

Pollutant or pollutant property	Kg/kkg (or pounds per 1,000 lb) of product		
	Continuous dischargers		Non-continuous dischargers (annual average)
	Maximum for any 1 day	Average of daily values for 30 consecutive days	
BOD5	13.7	6.7	4.5

SUBPART K—Continued

[NSPS for non-integrated mills where lightweight papers are produced from purchased pulp]

Pollutant or pollutant property	Kg/kkg (or pounds per 1,000 lb) of product		
	Continuous dischargers		Non-continuous dischargers (annual average)
	Maximum for any 1 day	Average of daily values for 30 consecutive days	
TSS	12.0	5.2	3.2
pH	(1)	(1)	(1)

	Maximum for any 1 day	
	Kg/kkg (or pounds per 1,000 lb) of product	Milligrams/liter
Pentachlorophenol	0.0059	(0.037)(38.2)/y
Trichlorophenol	0.0020	(0.013)(38.2)/y
y = wastewater discharged in kgal per ton at all times.		

[1] Within the range of 5.0 to 9.0 at all times.

SUBPART K

[NSPS for non-integrated mills where lightweight papers are produced from purchased pulp—electrical grade papers subdivision]

Pollutant or pollutant property	Kg/kkg (or pounds per 1,000 lb) of product		
	Continuous dischargers		Non-continuous dischargers (annual average)
	Maximum for any 1 day	Average of daily values for 30 consecutive days	
BOD5	24.1	11.7	7.9
TSS	21.1	9.2	5.6
pH	(1)	(1)	(1)

	Maximum for any 1 day	
	Kg/kkg (or pounds per 1,000 lb) of product	Milligrams/liter
Pentachlorophenol	0.0093	(0.033)(66.8)/y
Trichlorophenol	0.0032	(0.012)(66.8)/y
y = wastewater discharged in kgal per ton at all times.		

[1] Within the range of 5.0 to 9.0 at all times.

§ 430.116 Pretreatment standards for existing sources (PSES).

Except as provided in 40 CFR 403.7 and 403.13, any existing source subject to this subpart that introduces pollutants into a publicly owned treatment works must: Comply with 40 CFR part 403; and achieve the following pretreatment standards for existing sources (PSES) if it uses chlorophenolic-containing biocides. Permittees not using chlorophenolic-containing biocides must certify to the permit-issuing authority that they are not using these biocides. PSES must be attained on or before July 1, 1984:

SUBPART K

[PSES for non-integrated mills where fine paper is produced from purchased pulp—wood fiber furnish subdivision]

Pollutant or pollutant property	Maximum for any 1 day	
	Milligrams/liter (mg/l)	Kg/kkg (or pounds per 1,000 lb) of product [a]
Pentachlorophenol	(0.032)(15.2)/y	0.0020
Trichlorophenol	(0.010)(15.2)/y	0.00064
y = wastewater discharged in kgal per ton of product.		

[a] The following equivalent mass limitations are provided as guidance in cases when POTWs find it necessary to impose mass effluent limitations.

SUBPART K

[PSES for non-integrated mills where fine paper is produced from purchased pulp—cotton fiber furnish subdivision]

Pollutant or pollutant property	Maximum for any 1 day	
	Milligrams/liter (mg/l)	Kg/kkg (or pounds per 1,000 lb) of product [a]
Pentachlorophenol	(0.032)(42.3)/y	0.0056
Trichlorophenol	(0.010)(42.3)/y	0.0018
y = wastewater discharged in kgal per ton of product.		

[a] The following equivalent mass limitations are provided as guidance in cases when POTWs find it necessary to impose mass effluent limitations.

SUBPART K

[PSES for non-integrated mills where lightweight papers are produced from purchased pulp]

Pollutant or pollutant property	Maximum for any 1 day	
	Milligrams/liter (mg/l)	Kg/kkg (or pounds per 1,000 lb) of product [a]
Pentachlorophenol	(0.032)(48.7)/y	0.0065
Trichlorophenol	(0.010)(48.7)/y	0.0032
y = wastewater discharged in kgal per ton of product.		

[a] The following equivalent mass limitations are provided as guidance in cases when POTWs find it necessary to impose mass effluent limitations.

SUBPART K

[PSES for non-integrated mills where lightweight papers are produced from purchased pulp—electrical grade papers subdivision]

Pollutant or pollutant property	Maximum for any 1 day	
	Milligrams/liter (mg/l)	Kg/kkg (or pounds per 1,000 lb) of product [a]
Pentachlorophenol	(0.032)(76.9)/y	0.010
Trichlorophenol	(0.010)(76.9)/y	0.0032
y = wastewater discharged in kgal per ton of product.		

[a] The following equivalent mass limitations are provided as guidance in cases when POTWs find it necessary to impose mass effluent limitations.

§ 430.117 Pretreatment standards for new sources (PSNS).

Except as provided in 40 CFR 403.7, any new source subject to this subpart that introduces pollutants into a publicly owned treatment works must: Comply with 40 CFR part 403; and achieve the following pretreatment standards for new sources (PSNS) if it uses chlorophenolic-containing biocides. Permittees not using chlorophenolic-containing biocides

must certify to the permit-issuing authority that they are not using these biocides:

SUBPART K

[PSNS for non-integrated mills where fine paper is produced from purchased pulp—wood fiber furnish subdivision]

Pollutant or pollutant property	Maximum for any 1 day	
	Milligrams/liter (mg/l)	Kg/kkg (or pounds per 1,000 lb) of product [a]
Pentachlorophenol	(0.052)(9.4)/y	0.0020
Trichlorophenol	(0.016)(9.4)/y	0.0064
y = wastewater discharged in kgal per ton of product.		

[a] The following equivalent mass limitations are provided as guidance in cases when POTWs find it necessary to impose mass effluent limitations.

SUBPART K

[PSNS for non-integrated mills where fine paper is produced from purchased pulp—cotton fiber furnish subdivision]

Pollutant or pollutant property	Maximum for any 1 day	
	Milligrams/liter (mg/l)	Kg/kkg (or pounds per 1,000 lb) of product [a]
Pentachlorophenol	(0.044)(31.1)/y	0.0056
Trichlorophenol	(0.014)(31.1)/y	0.0018
y = wastewater discharged in kgal per ton of product.		

[a] The following equivalent mass limitations are provided as guidance in cases when POTWs find it necessary to impose mass effluent limitations.

SUBPART K

[PSNS for non-integrated mills where lightweight papers are produced from purchased pulp]

Pollutant or pollutant property	Maximum for any 1 day	
	Milligrams/liter (mg/l)	Kg/kkg (or pounds per 1,000 lb) of product [a]
Pentachlorophenol	(0.041)(38.2)/y	0.0065
Trichlorophenol	(0.013)(38.2)/y	0.0020
y = wastewater discharged in kgal per ton of product.		

[a] The following equivalent mass limitations are provided as guidance in cases when POTWs find it necessary to impose mass effluent limitations.

SUBPART K

[PSNS for non-integrated mills where lightweight papers are produced from purchased pulp—electrical grade papers subdivision]

Pollutant or pollutant property	Maximum for any 1 day	
	Milligrams/liter (mg/l)	Kg/kkg (or pounds per 1,000 lb) of product [a]
Pentachlorophenol	(0.037)(66.8)/y	0.010
Trichlorophenol	(0.012)(66.8)/y	0.0032
y = wastewater discharged in kgal per ton of product.		

[a] The following equivalent mass limitations are provided as guidance in cases when POTWs find it necessary to impose mass effluent limitations.

Subpart L—Tissue, Filter, Non-Woven, and Paperboard From Purchased Pulp Subcategory

§ 430.120 Applicability; description of the tissue, filter, non-woven, and paperboard from purchased pulp subcategory.

The provisions of this subpart are applicable to discharges resulting from the production of tissue papers at non-integrated mills, filter and non-woven papers at non-integrated mills, and paperboard at non-integrated mills. The production of electrical grades of board and matrix board is not included in this subpart.

§ 430.121 Specialized definitions.

For the purpose of this subpart, the general definitions, abbreviations, and methods of analysis set forth in 40 CFR part 401 and § 430.01 of this part shall apply to this subpart.

§ 430.122 Effluent limitations representing the degree of effluent reduction attainable by the application of the best practicable control technology currently available (BPT).

Except as provided in 40 CFR 125.30 through 125.32, any existing point source subject to this subpart must achieve the following effluent limitations representing the degree of effluent reduction attainable by the application of the best practicable control technology currently available (BPT), except that non-continuous dischargers shall not be subject to the maximum day and average of 30 consecutive days limitations but shall be subject to annual average effluent limitations:

SUBPART L

[BPT effluent limitations for non-integrated mills where tissue papers are produced from purchased pulp]

Pollutant or pollutant property	Kg/kkg (or pounds per 1,000 lb) of product		
	Continuous dischargers		Non-continuous dischargers (annual average)
	Maximum for any 1 day	Average of daily values for 30 consecutive days	
BOD5	11.4	6.25	3.49
TSS	10.25	5.0	2.84
pH	(1)	(1)	(1)

[1] Within the range of 5.0 to 9.0 at all times.

SUBPART L

[BPT effluent limitations for non-integrated mills where filter and non-woven papers are produced from purchased pulp]

Pollutant or pollutant property	Kg/kkg (or pounds per 1,000 lb) of product		
	Continuous dischargers		Non-continuous dischargers (annual average)
	Maximum for any 1 day	Average of daily values for 30 consecutive days	
BOD5	29.6	16.3	9.1
TSS	26.6	13.0	7.4
pH	(1)	(1)	(1)

[1] Within the range of 5.0 to 9.0 at all times.

SUBPART L

[BPT effluent limitations for non-integrated mills where paperboard is produced from purchased pulp]

Pollutant or pollutant property	Kg/kkg (or pounds per 1,000 lb) of product		
	Continuous dischargers	Non-continuous dischargers (Annual average)	
		Maximum for any 1 day	Average of daily values for 30 consecutive days
BOD5	6.5	3.6	2.0
TSS	5.8	2.8	1.6
pH	(1)	(1)	(1)

[1] Within the range of 5.0 to 9.0 at all times.

§ 430.123 Effluent limitations guidelines representing the degree of effluent reduction attainable by the application of the best conventional pollutant control technology (BCT).

Except as provided in 40 CFR 125.30 through 125.32, any existing point source subject to this subpart shall achieve the following effluent limitations representing the degree of effluent reduction attainable by the application of the best conventional pollutant control technology (BCT): The limitations shall be the same as those specified for conventional pollutants (which are defined in 40 CFR 401.16) in § 430.122 of this subpart for the best practicable control technology currently available (BPT).

§ 430.124 Effluent limitations representing the degree of effluent reduction attainable by the application of the best available technology economically achievable (BAT).

Except as provided in 40 CFR 125.30 through 125.32, any existing point source subject to this subpart where chlorophenolic-containing biocides are used must achieve the following effluent limitations representing the degree of effluent reduction attainable by the application of the best available technology economically achievable (BAT). Non-continuous dischargers shall not be subject to the maximum day mass limitations in kg/kkg (lb/1000 lb) but shall be subject to concentration limitations. Concentration limitations are only applicable to non-continuous dischargers. Permittees not using chlorophenolic-containing biocides must certify to the permit-issuing authority that they are not using these biocides:

SUBPART L

[BAT effluent limitations for non-integrated mills where tissue papers are produced from purchased pulp]

Pollutant or pollutant property	Maximum for any 1 day	
	Kg/kkg (or pounds per 1,000 lb) of product	Milligrams/liter
Pentachlorophenol	0.0028	(0.029)(22.9)/y
Trichlorophenol	0.00096	(0.010)(22.9)/y
y = wastewater discharged in kgal per ton of product.		

SUBPART L

[BAT effluent limitations for non-integrated mills where filter and non-woven papers are produced from purchased pulp]

Pollutant or pollutant property	Maximum for any 1 day	
	Kg/kkg (or pounds per 1,000 lb) of product	Milligrams/liter
Pentachlorophenol	0.0072	(0.029)(59.9)/y
Trichlorophenol	0.0025	(0.010)(59.9)/y
y = wastewater discharged in kgal per ton of product.		

SUBPART L

[BAT effluent limitations for non-integrated mills where paperboard is produced from purchased pulp]

Pollutant or pollutant property	Maximum for any 1 day	
	Kg/kkg (or pounds per 1,000 lb) of product	Milligrams/liter
Pentachlorophenol	0.0016	(0.029)(12.9)/y
Trichlorophenol	0.00054	(0.010)(12.9)/y
y = wastewater discharged in kgal per ton of product.		

§ 430.125 New source performance standards (NSPS).

Any new source subject to this subpart must achieve the following new source performance standards (NSPS), except that non-continuous dischargers shall not be subject to the maximum day and average of 30 consecutive days effluent limitations for BOD5 and TSS, but shall be subject to annual average effluent limitations. Also, for non-continuous dischargers, concentration limitations (mg/l) shall apply, where provided. Concentration limitations will only apply to non-continuous dischargers. Only facilities where chlorophenolic-containing biocides are used shall be subject to pentachlorophenol and trichlorophenol limitations. Permittees not using chlorophenolic-containing biocides must certify to the permit-issuing authority that they are not using these biocides:

SUBPART L

[NSPS for non-integrated mills where tissue papers are produced from purchased pulp]

Pollutant or pollutant property	Kg/kkg (or pounds per 1,000 lb) of product		
	Continuous dischargers		Non-continuous dischargers (annual average)
	Maximum for any 1 day	Average of daily values for 30 consecutive days	
BOD5	7.0	3.4	2.3
TSS	6.0	2.6	1.6
pH	([1])	([1])	([1])

	Maximum for any 1 day	
	Kg/kkg (or pounds per 1,000 lb) of product	Milligrams/liter
Pentachlorophenol	0.0028	(0.035)(19.1)/y
Trichlorophenol	0.00096	(0.012)(19.1)/y
y = wastewater discharged in kgal per ton at all times.		

[1] Within the range of 5.0 to 9.0 at all times.

SUBPART L

[NSPS for non-integrated mills where filter and non-woven papers are produced from purchased pulp]

Pollutant or pollutant property	Kg/kkg (or pounds per 1,000 lb) of product		
	Continuous dischargers		Non-continuous dischargers (annual average)
	Maximum for any 1 day	Average of daily values for 30 consecutive days	
BOD5	17.1	8.3	5.6
TSS	15.0	6.6	4.0
pH	(1)	(1)	(1)

	Maximum for any 1 day	
	Kg/kkg (or pounds per 1,000 lb) of product	Milligrams/liter
Pentachlorophenol	0.0072	(0.037)(47.5)/y
Trichlorophenol	0.0025	(0.013)(47.5)/y
y = wastewater discharged in kgal per ton at all times.		

[1] Within the range of 5.0 to 9.0 at all times.

SUBPART L

[NSPS for non-integrated mills where paperboard is produced from purchased pulp]

Pollutant or pollutant property	Kg/kkg (or pounds per 1,000 lb) of product		
	Continuous dischargers		Non-continuous dischargers (annual average)
	Maximum for any 1 day	Average of daily values for 30 consecutive days	
BOD5	4.0	1.9	1.3
TSS	3.5	1.5	0.9
pH	(1)	(1)	(1)

	Maximum for any 1 day	
	Kg/kkg (or pounds per 1,000 lb) of product	Milligrams/liter
Pentachlorophenol	0.0016	(0.033)(11.2)/y
Trichlorophenol	0.00054	(0.012)(11.2)/y
y = wastewater discharged in kgal per ton at all times.		

(1) Within the range of 5.0 to 9.0 at all times.

§ 430.126 Pretreatment standards for existing sources (PSES).

Except as provided in 40 CFR 403.7 and 403.13, any existing source subject to this subpart that introduces pollutants into a publicly owned treatment works must: Comply with 40 CFR part 403; and achieve the following pretreatment standards for existing sources (PSES) if it uses chlorophenolic-containing biocides. Permittees not using chlorophenolic-containing biocides must certify to the permit-issuing authority that they are not using these biocides. PSES must be attained on or before July 1, 1984:

SUBPART L

[PSES for non-integrated mills where tissue papers are produced from purchased pulp]

Pollutant or pollutant property	Maximum for any 1 day	
	Milligrams/liter (mg/l)	Kg/kkg (or pounds per 1,000 lb) of product [a]
Pentachlorophenol	(0.032)(22.9)/y	0.0031
Trichlorophenol	(0.010)(22.9)/y	0.00096
y = wastewater discharged in kgal per ton of product.		

[a] The following equivalent mass limitations are provided as guidance in cases when POTWs find it necessary to impose mass effluent limitations.

SUBPART L

[PSES for non-integrated mills where filter and non-woven papers are produced from purchased pulp]

Pollutant or pollutant property	Maximum for any 1 day	
	Milligrams/liter (mg/l)	Kg/kkg (or pounds per 1,000 lb) of product [a]
Pentachlorophenol	(0.032)(59.9)/y	0.0080
Trichlorophenol	(0.010)(59.9)/y	0.0025
y = wastewater discharged in kgal per ton of product.		

[a] The following equivalent mass limitations are provided as guidance in cases when POTWs find it necessary to impose mass effluent limitations.

SUBPART L

[PSES for non-integrated mills where paperboard is produced from purchased pulp]

Pollutant or pollutant property	Maximum for any 1 day	
	Milligrams/liter (mg/l)	Kg/kkg (or pounds per 1,000 lb) of product [a]
Pentachlorophenol	(0.032)(12.9)/y	0.0017
Trichlorophenol	(0.010)(12.9)/y	0.00054
y = wastewater discharged in kgal per ton of product.		

[a] The following equivalent mass limitations are provided as guidance in cases when POTWs find it necessary to impose mass effluent limitations.

§ 430.127 Pretreatment standards for new sources (PSNS).

Except as provided in 40 CFR 403.7, any new source subject to this subpart that introduces pollutants into a publicly owned treatment works must: Comply with 40 CFR part 403; and achieve the following pretreatment standards for new sources (PSNS) if it uses chlorophenolic-containing biocides. Permittees not using chlorophenolic-containing biocides must certify to the permit-issuing authority that they are not using these biocides:

SUBPART L

[PSNS for non-integrated mills where tissue papers are produced from purchased pulp]

Pollutant or pollutant property	Maximum for any 1 day	
	Milligrams/liter (mg/l)	Kg/kkg (or pounds per 1,000 lb) of product [a]
Pentachlorophenol	(0.038)(19.1)/y	0.0031
Trichlorophenol	(0.012)(19.1)/y	0.00096

SUBPART L—Continued

[PSNS for non-integrated mills where tissue papers are produced from purchased pulp]

Pollutant or pollutant property	Maximum for any 1 day	
	Milligrams/liter (mg/l)	Kg/kkg (or pounds per 1,000 lb) of product [a]
y = wastewater discharged in kgal per ton of product.		

[a] The following equivalent mass limitations are provided as guidance in cases when POTWs find it necessary to impose mass effluent limitations.

SUBPART L

[PSNS for non-integrated mills where filter and non-woven papers are produced from purchased pulp]

Pollutant or pollutant property	Maximum for any 1 day	
	Milligrams/liter (mg/l)	Kg/kkg (or pounds per 1,000 lb) of product [a]
Pentachlorophenol	(0.040)(47.5)/y	0.0080
Trichlorophenol	(0.013)(47.5)/y	0.0025
y = wastewater discharged in kgal per ton of product.		

[a] The following equivalent mass limitations are provided as guidance in cases when POTWs find it necessary to impose mass effluent limitations.

SUBPART L

[PSNS for non-integrated mills where paperboard is produced from purchased pulp]

Pollutant or pollutant property	Maximum for any 1 day	
	Milligrams/liter (mg/l)	Kg/kkg (or pounds per 1,000 lb) of product [a]
Pentachlorophenol	(0.037)(11.2)/y	0.0017
Trichlorophenol	(0.012)(11.2)/y	0.00054
y = wastewater discharged in kgal per ton of product.		

[a] The following equivalent mass limitations are provided as guidance in cases when POTWs find it necessary to impose mass effluent limitations.

APPENDIX A TO PART 430— METHODS 1650 AND 1653

METHOD 1650—ADSORBABLE ORGANIC HALIDES BY ADSORPTION AND COULOMETRIC TITRATION

1.0 Scope and Application

1.1 This method is for determination of adsorbable organic halides (AOX) associated with the Clean Water Act; the Resource Conservation and Recovery Act; the Comprehensive Environmental Response, Compensation, and Liability Act; and other organic halides amenable to combustion and coulometric titration. The method is designed to meet the survey and monitoring requirements of the Environmental Protection Agency (EPA).

1.2 The method is applicable to the determination of AOX in water and wastewater. This method is a combination of several existing methods for organic halide measurements (References 1 through 7).

1.3 The method can be used to measure organically-bound halides (chlorine, bromine, iodine) present in dissolved or suspended form. Results are reported as organic chloride (Cl^-). The detection limit of the method is usually dependent on interferences rather than instrumental limitations. A method detection limit (MDL; Reference 8) of 6.6 µg/L, and a minimum level (ML; Section 18) of 20 µg/L, can be achieved with no interferences present.

1.4 This method is for use by or under the supervision of analysts experienced in the use of a combustion/micro-coulometer. Each laboratory that uses this method must demonstrate the ability to generate acceptable results using the procedures described in Section 9.2.

1.5 Any modification of the method beyond those expressly permitted (Section 9.1.2) is subject to application and approval of an alternate test procedure under 40 CFR 136.4 and 136.5.

2.0 Summary of Method

2.1 Sample preservation: Residual chlorine that may be present is removed by the addition of sodium thiosulfate. Samples are adjusted to a pH < 2 and maintained at 0 to 4 °C until analysis.

2.2 Sample analysis: Organic halide in water is determined by adsorption onto granular activated carbon (GAC), washing the adsorbed sample and GAC to remove inorganic halide, combustion of the sample and GAC to form the hydrogen halide, and titration of the hydrogen halide with a micro-coulometer, as shown in Figure 1.

2.3 Micro-coulometer.

2.3.1 This detector operates by maintaining a constant silver-ion concentration in a titration cell. An electric potential is applied to a solid silver electrode to produce silver ions in the cell. As hydrogen halide produced from the combustion of organic halide enters the cell, it is partitioned into an acetic acid electrolyte where it precipitates as silver halide. The current produced is integrated over the combustion period. The electric charge is proportional to the number of moles of halogen captured in the cell (Reference 6).

2.3.2 The mass concentration of organic halides is reported as an equivalent concentration of organically bound chloride (Cl^-).

3.0 Definitions

3.1 Adsorbable organic halides is defined as the analyte measured by this method. The nature of the organo-halides and the presence of semi-extractable material will influence the amount measured and interpretation of results.

3.2 Definitions for terms used in this method are given in the glossary at the end of the method (Section 18).

4.0 Interferences

4.1 Solvents, reagents, glassware, and other sample processing hardware may yield elevated readings from the micro-coulometer. All materials used in the analysis shall be demonstrated to be free from interferences under the conditions of analysis by running method blanks initially and with each sample batch (samples started through the adsorption process in a given eight-hour shift, to a maximum of 20 samples). Specific selection of reagents and purification of solvents may be required.

4.2 Glassware is cleaned by detergent washing in hot water, rinsing with tap water and distilled water, capping with aluminum foil, and baking at 450 °C for at least one hour. For some glassware, immersion in a chromate cleaning solution prior to detergent washing may be required. If blanks from glassware without cleaning or with fewer cleaning steps show no detectable organic halide, the cleaning steps that do not eliminate organic halide may be omitted.

4.3 Most often, contamination results from methylene chloride vapors in laboratories that perform organic extractions. Heating, ventilating, and air conditioning systems that are shared between the extraction laboratory and the laboratory in which organic halide measurements are performed transfer the methylene chloride vapors to the air in the organic halide laboratory. Exposure of the activated carbon used in the analysis results in contamination. Separate air handling systems, charcoal filters, and glove boxes can be used to minimize this exposure.

4.4 Activated carbon.

4.4.1 The purity of each lot of activated carbon must be verified before each use by measuring the adsorption capacity and the background level of halogen (Section 9.5). The stock of activated carbon should be stored in its granular form in a glass container that is capped tightly. Protect carbon at all times from sources of halogen vapors.

4.4.2 Inorganic substances such as chloride, chlorite, bromide, and iodide will adsorb on activated carbon to an extent dependent on their original concentration in the aqueous solution and the volume of sample adsorbed. Treating the activated carbon with a solution of nitrate causes competitive desorption of inorganic halide species. However, if the inorganic halide concentration is greater than 2,000 times the organic halide concentration, artificially high results may be obtained.

4.4.3 Halogenated organic compounds that are weakly adsorbed on activated carbon are only partially recovered from the sample. These include certain alcohols and acids such as chloroethanol and chloroacetic acid that can be removed from activated carbon by the nitrate wash.

4.5 Polyethylene gloves should be worn when handling equipment surfaces in contact with the sample to prevent transfer of contaminants that may be present on the hands.

5.0 Safety

5.1 The toxicity or carcinogenicity of each reagent used in this method has not been precisely determined; however, each chemical substance should be treated as a potential health hazard. Exposure to these substances should be reduced to the lowest possible level. The laboratory is responsible for maintaining a current awareness file of OSHA regulations regarding the safe handling of the chemicals specified in this method. A reference file of material safety data sheets (MSDSs) should be made available to all personnel involved in the chemical analysis. Additional information on laboratory safety can be found in References 9 through 11.

5.2 This method employs strong acids. Appropriate clothing, gloves, and eye protection should be worn when handling these substances.

5.3 Field samples may contain high concentrations of toxic volatile compounds. Sample containers should be opened in a hood and handled with gloves that will prevent exposure.

6.0 Equipment and Supplies

NOTE: Brand names, suppliers, and part numbers are for illustrative purposes only. No endorsement is implied. Equivalent performance may be achieved using apparatus and materials other than those specified here, but demonstration of equivalent performance that meets the requirements of this method is the responsibility of the laboratory.

6.1 Sampling equipment.

6.1.1 Bottles: 100- to 4000-mL, amber glass, sufficient for all testing (Section 8.2). Detergent water wash, chromic acid rinse, rinse with tap and distilled water, cover with aluminum foil, and heat to 450 °C for at least one hour before use.

6.1.2 PTFE liner: Cleaned as above and baked at 100 to 200 °C for at least one hour.

6.1.3 Bottles and liners must be lot certified to be free of organic halide by running blanks according to this method.

6.2 Scoop for granular activated carbon (GAC): Capable of precisely measuring 40 mg (±5 mg) GAC (Dohrmann Measuring Cup 521–021, or equivalent).

6.3 Batch adsorption and filtration system.

6.3.1 Adsorption system: Rotary shaker, wrist action shaker, ultrasonic system, or other system for assuring thorough contact of sample with activated carbon. Systems different from the one described below must be demonstrated to meet the performance requirements in Section 9 of this method.

6.3.1.1 Erlenmeyer flasks: 250- to 1500-mL with ground-glass stopper, for use with rotary shaker.

6.3.1.2 Shake table: Sybron Thermolyne Model LE ''Big Bill'' rotator/shaker, or equivalent.

6.3.1.3 Rack attached to shake table to permit agitation of 16 to 25 samples simultaneously.

6.3.2 Filtration system (Figure 2).

6.3.2.1 Vacuum filter holder: Glass, with fritted-glass support (Fisher Model 09–753E, or equivalent).

6.3.2.2 Polycarbonate filter: 0.40 to 0.45 micron, 25-mm diameter (Micro Separations Inc, Model K04CP02500, or equivalent).

6.3.2.3 Filter forceps: Fisher Model 09–753–50, or equivalent, for handling filters. Two forceps may better aid in handling filters. Clean by washing with detergent and water, rinsing with tap and deionized water, and air drying on aluminum foil.

6.3.2.4 Vacuum flask: 500- to 1500-mL (Fisher 10–1800, or equivalent).

6.3.2.5 Vacuum Source: A pressure/vacuum pump, rotary vacuum pump, or other vacuum source capable of providing at least 610 mm (24 in.) Hg vacuum at 30 L/min free air displacement.

6.3.2.6 Stopper and tubing to mate the filter holder to the flask and the flask to the pump.

6.3.2.7 Polyethylene gloves: (Fisher 11–394–110–B, or equivalent).

6.4 Column adsorption system.

6.4.1 Adsorption module: Dohrmann AD–2, Mitsubishi TXA–2, or equivalent with pressurized sample and nitrate-wash reservoirs, adsorption columns, column housings, gas and gas pressure regulators, and receiving vessels. For each sample reservoir, there are two adsorption columns connected in series. A small steel funnel for filling the columns and a rod for pushing out the carbon are also required. A schematic of the column adsorption system is shown in Figure 3.

6.4.2 Adsorption columns: Pyrex, 5 ± 0.2 cm long × 2 mm ID, to hold 40 mg of granular activated carbon (GAC).

6.4.3 Cerafelt: Johns-Manville, or equivalent, formed into plugs using stainless steel borer (2 mm ID) with ejection rod (available from Dohrmann or Mitsubishi) to hold 40 mg of granular activated carbon (GAC). Caution: Handle Cerafelt with gloves.

6.4.4 Column holders: To support adsorption columns.

6.5 Combustion/micro-coulometer system: Commercially available as a single unit or assembled from parts. At the time of the writing of this method, organic halide units were commercially available from the Dohrmann Division of Rosemount Analytical, Santa Clara, California; Euroglas BV, Delft, the Netherlands; and Mitsubishi Chemical Industries, Ltd., Tokyo, Japan.

6.5.1 Combustion system: Older systems may not have all of the features shown in Figure 4. These older systems may be used provided the performance requirements (Section 9) of this method are met.

6.5.1.1 Combustion tube: Quartz, capable of being heated to 800 to 1000 °C and accommodating a boat sampler. The tube must contain an air lock for introduction of a combustion boat, connections for purge and combustion gas, and connection to the micro-coulometer cell.

6.5.1.2 Tube furnace capable of controlling combustion tube in the range of 800 to 1000 °C.

6.5.1.3 Boat sampler: Capable of holding 35 to 45 mg of activated carbon and a polycarbonate filter, and fitting into the combustion tube (Section 6.5.1.1). Some manufacturers offer an enlarged boat and combustion tube for this purpose. Under a time-

controlled sequence, the boat is first moved into an evaporation zone where water and other volatiles are evaporated, and then into the combustion zone where the carbon and all other organic material in the boat are burned in a flowing oxygen stream. The evolved gases are transported by a non-reactive carrier gas to the micro-coulometer cell.

6.5.1.4 Motor driven boat sampler: Capable of advancing the combustion boat into the furnace in a reproducible time sequence. A suggested time sequence is as follows:

A. Establish initial gas flow rates: 160 mL/min CO_2; 40 mL/min O_2.

B. Sequence start.

C. Hold boat in hatch for five seconds to allow integration for baseline subtraction.

D. Advance boat into vaporization zone.

E. Hold boat in vaporization zone for 110 seconds.

F. Establish gas flow rates for combustion: 200 mL/min O_2; 0 mL/min CO_2; advance boat into pyrolysis zone (800 °C).

G. Hold boat in pyrolysis zone for six minutes.

H. Return gas flow rates to initial values; retract boat into hatch to cool and to allow remaining HX to be swept into detector (approximately two minutes).

I. Stop integration at 10 minutes after sequence start.

NOTE: If the signal from the detector does not return to baseline, it may be necessary to extend the pyrolysis time.The sequence above may need to be optimized for each instrument.

6.5.1.5 Absorber: Containing sulfuric acid to dry the gas stream after combustion to prevent backflush of electrolyte is highly recommended.

6.5.2 Micro-coulometer system: Capable of detecting the equivalent of 0.2 µg of Cl^- at a signal-to-noise ratio of 2; capable of detecting the equivalent of 1 µg of Cl^- with a relative standard deviation less than 10%, and capable of accumulating a minimum of the equivalent of 500 µg of Cl^- before a change of electrolyte is required.

6.5.2.1 Micro-coulometer cell: The three cell designs presently in use are shown in Figure 1. Cell operation is described in Section 2.

6.5.2.2 Cell controller: Electronics capable of measuring the small currents generated in the cell and accumulating and displaying the charge produced by hydrogen halides entering the cell. A strip-chart recorder is desirable for display of accumulated charge.

6.6 Miscellaneous glassware: nominal sizes are specified below; other sizes may be used, as necessary.

6.6.1 Volumetric flasks: 5-, 10-, 25-, 50-, 100-, and 1000-mL.

6.6.2 Beakers: 100-, 500-, and 1000-mL.

6.6.3 Volumetric pipets: 1- and 10-mL with pipet bulbs.

6.6.4 Volumetric micro-pipets: 10-, 20-, 50-, 100-, 200-, and 500-µL with pipet control (Hamilton 0010, or equivalent).

6.6.5 Graduated cylinders: 10-, 100-, and 1000-mL.

6.7 Micro-syringes: 10-, 50-, and 100-µL.

6.8 Balances.

6.8.1 Top-loading, capable of weighing 0.1 g.

6.8.2 Analytical, capable of weighing 0.1 mg.

6.9 pH meter.

6.10 Wash bottles: 500- to 1000-mL, PTFE or polyethylene.

6.11 Strip-chart recorder: suggested but not required—useful for determining end of integration (Section 11.4.2).

7.0 Reagents and Standards

7.1 Granular activated carbon (GAC): 75 to 150 µm (100 to 200 mesh); (Dohrmann, Mitsubishi, Carbon Plus, or equivalent), with chlorine content less than 1 µg Cl^- per scoop (< 25 µg Cl^- per gram), adsorption capacity greater than 1000 µg Cl^- (as 2,4,6-trichlorophenol) per scoop (≦25,000 µg/g), inorganic halide retention of less than 1 µg Cl^- per scoop in the presence of 10 mg of inorganic halide (< 20 µg Cl^- per gram in the presence of 2500 mg of inorganic halide), and that meets the other test criteria in this method.

7.2 Reagent water: Water in which organic halide is not detected by this method.

7.2.1 Preparation: Reagent water may be generated by:

7.2.1.1 Activated carbon: Pass tap water through a carbon bed (Calgon Filtrasorb-300, or equivalent).

7.2.1.2 Water purifier: Pass tap water through a purifier (Millipore Super Q, or equivalent).

7.2.2 pH adjustment: Adjust the pH of the reagent water to < 2 with nitric acid for all reagent water used in this method, except for the acetic acid solution (Section 7.13).

7.3 Nitric acid (HNO_3): Concentrated, analytical grade.

7.4 Sodium chloride (NaCl) solution (100 µg/mL of Cl^-): Dissolve 0.165g NaCl in 1000 mL reagent water. This solution is used for cell testing and for the inorganic halide rejection test.

7.5 Ammonium chloride (NH_4Cl) solution (100 µg/mL of Cl^-): Dissolve 0.1509 g NH_4Cl in 1000 mL reagent water.

7.6 Sulfuric acid: Reagent grade (specific gravity 1.84).

7.7 Oxygen: 99.9% purity.

7.8 Carbon Dioxide: 99.9% purity.

7.9 Nitrate stock solution: In a 1000-mL volumetric flask, dissolve 17g of $NaNO_3$ in approximately 100 mL of reagent water, add 1.4 mL nitric acid (Section 7.3) and dilute to the mark with reagent water.

7.10 Nitrate wash solution: Dilute 50 mL of nitrate stock solution (Section 7.9) to 1000 mL with reagent water.

7.11 Sodium thiosulfate ($Na_2S_2O_3$) solution (1 N): Weigh 79 grams of $Na_2S_2O_3$ in a 1-L volumetric flask and dilute to the mark with reagent water.

7.12 Trichlorophenol solutions.

NOTE: The calibration solutions in this section employ 100-mL volumes. For determinations requiring a larger or smaller volume, increase or decrease the size of the volumetric flasks commensurately. For example, if a 1-L sample is to be analyzed, use 1000-mL flasks (Sections 7.12.3.1 and 7.12.4) and 10 times the volume of reagent water (Sections 7.12.3.1 and 7.12.4). The volume of stock solution added to the calibration solutions and precision and recovery (PAR) test solution remain as specified (Sections 7.12.3.2 and 7.12.4) so that the same amount of chloride is delivered to the coulometric cell regardless of the volume of the calibration and PAR solutions.

7.12.1 Methanol: HPLC grade.

7.12.2 Trichlorophenol stock solution (1.0 mg/mL of Cl^-): Dissolve 0.186 g of 2,4,6-trichlorophenol in 100 mL of halide-free methanol.

7.12.3 Trichlorophenol calibration solutions.

7.12.3.1 Place approximately 90 mL of reagent water in each of five 100-mL volumetric flasks.

7.12.3.2 Using a calibrated micro-syringe or micro-pipets, add 2, 5, 10, 30, and 80 µL of the trichlorophenol stock solution (Section 7.12.2) to the volumetric flasks and dilute each to the mark with reagent water to produce calibration solutions of 2, 5, 10, 30, and 80 µg Cl^- per 100 mL of solution (20, 50, 100, 300, and 800 µg/L).

7.12.3.3 Some instruments may have a calibration range that does not extend to 800 µg/L (80 µg of Cl^-). For those instruments, a narrower dynamic range may be used. However, if the concentration of halide in a sample exceeds that range, the sample must be diluted to bring the concentration within the range calibrated.

7.12.4 Trichlorophenol precision and recovery (PAR) test solution (10 µg/L of Cl^-): Partially fill a 100-mL volumetric flask, add 10 µL of the stock solution (Section 7.12.2), and dilute to the mark with reagent water.

7.13 Acetic acid solution: Containing 30 to 70% acetic acid in deionized water, per the instrument manufacturer's instructions.

8.0 Sample Collection, Preservation, and Storage

8.1 Sample preservation.

8.1.1 Residual chlorine: If the sample is known or suspected to contain free chlorine, the chlorine must be reduced to eliminate positive interference that may result from continued chlorination reactions. A knowledge of the process from which the sample is collected may be of value in determining whether dechlorination is necessary. Immediately after sampling, test for residual chlorine using the following method or an alternative EPA method (Reference 12):

8.1.1.1 Dissolve a few crystals of potassium iodide in the sample and add three to five drops of a 1% starch solution. A blue color indicates the presence of residual chlorine.

8.1.1.2 If residual chlorine is found, add 1 mL of sodium thiosulfate solution (Section 7.11) for each 2.5 ppm of free chlorine or until the blue color disappears. Do not add an excess of sodium thiosulfate. Excess sodium thiosulfate may cause decomposition of a small fraction of the OX.

8.1.2 Acidification: Adjust the pH of aqueous samples to < 2 with nitric acid. Acidification inhibits biological activity and stabilizes chemical degradation, including possible dehalogenation reactions that may occur at high pH. Acidification is necessary to facilitate thorough adsorption.

8.1.3 Refrigeration: Maintain samples at a temperature of 0 to 4 °C from time of collection until analysis.

8.2 Collect the amount of sample necessary for analysis (Section 11) and all QC tests (Section 9) in an amber glass bottle of the appropriate size (Section 6.1.1).

8.3 Analyze samples no less than three days nor more than six months after collection.

9.0 Quality Control

9.1 Each laboratory that uses this method is required to operate a formal quality assurance program. The minimum requirements of this program consist of an initial demonstration of laboratory capability, an ongoing analysis of standards and blanks as tests of continued performance, and analysis of matrix spike and matrix spike duplicate (MS/MSD) samples to assess accuracy and precision. Laboratory performance is compared to established performance criteria to determine if the results of analyses meet the performance characteristics of the method.

9.1.1 The laboratory shall make an initial demonstration of the ability to produce acceptable results with this method. This ability is demonstrated as described in Section 9.2.

9.1.2 The laboratory is permitted to modify this method to improve separations or lower the costs of measurements, provided that all performance specifications are met. Each time a modification is made to the method, the laboratory is required to repeat the procedures in Sections 9.2.2 and 10 to demonstrate continued method performance. If the detection limit of the method will be affected by the modification, the laboratory should demonstrate that the MDL (40 CFR

136, Appendix B) is less than or equal to the MDL in this method or one-third the regulatory compliance level, whichever is higher.

9.1.3 The laboratory shall spike 10% of the samples with known concentrations of 2,4,6-trichlorophenol to monitor method performance and matrix interferences (interferences caused by the sample matrix). This test is described in Section 9.3. When results of these spikes indicate atypical method performance for samples, the samples are diluted to bring method performance within acceptable limits.

9.1.4 Analyses of blanks are required to demonstrate freedom from contamination. The procedures and criteria for analysis of blanks are described in Section 9.4.

9.1.5 The laboratory shall, on an ongoing basis, demonstrate through the analysis of the precision and recovery (PAR) standard that the analysis system is in control. These procedures are described in Section 9.10.

9.1.6 The laboratory shall perform quality control tests on the granular activated carbon. These procedures are described in Section 9.5.

9.1.7 Samples are analyzed in duplicate to demonstrate precision. These procedures are described in Section 9.6.

9.2 Initial demonstration of laboratory capability.

9.2.1 Method Detection Limit (MDL): To establish the ability to detect AOX, the laboratory should determine the MDL per the procedure in 40 CFR 136, Appendix B using the apparatus, reagents, and standards that will be used in the practice of this method. An MDL less than or equal to the MDL in Section 1.3 should be achieved prior to the practice of this method.

9.2.2 Initial precision and recovery (IPR): To establish the ability to generate acceptable precision and recovery, the laboratory shall perform the following operations:

9.2.2.1 Analyze four aliquots of the PAR standard (Section 7.12.4) and a method blank according to the procedures in Sections 9.4 and 11.

9.2.2.2 Using the blank-subtracted results of the set of four analyses, compute the average percent recovery (X) and the standard deviation of the percent recovery (s) for the results.

9.2.2.3 The average percent recovery shall be in the range of 81 to 114 μg/L and the standard deviation shall be less than 8 μg/L. If X and s meet these acceptance criteria, system performance is acceptable and analysis of blanks and samples may begin. If, however, s exceeds the precision limit or X falls outside the range for recovery, system performance is unacceptable. In this case, correct the problem and repeat the test.

9.3 Matrix spikes: The laboratory shall spike a minimum of 10% of samples from a given matrix type (e.g., C-stage filtrate, produced water, treated effluent) in duplicate (MS/MSD). If only one sample from a given matrix type is analyzed, an additional two aliquots of that sample shall be spiked.

9.3.1 The concentration of the analytes spiked into the MS/MSD shall be determined as follows:

9.3.1.1 If, as in compliance monitoring, the concentration of OX is being checked against a regulatory concentration limit, the spiking level shall be at that limit or at one to five times higher than the background concentration determined in Section 9.3.2, whichever concentration is higher.

9.3.1.2 If the concentration of OX is not being checked against a regulatory limit, the spike shall be at the concentration of the precision and recovery standard (PAR; Section 7.12.4) or at one to five times higher than the background concentration determined in Section 9.3.2, whichever concentration is higher.

9.3.2 Analyze one sample out of each batch of 10 samples from each site to determine the background concentration of AOX. If necessary, prepare a solution of 2,4,6-trichlorophenol appropriate to produce a level in the sample one to five times the background concentration. Spike two additional sample aliquots with spiking solution and analyze them to determine the concentration after spiking.

9.3.2.1 Compute the percent recovery of each analyte in each aliquot:

$$\%\ \text{Recovery} = \frac{100\ (\text{Found} - \text{Background})}{\text{T}}$$

where:

T is the true value of the spike

9.3.2.2 Compute the relative percent difference (RPD) between the two results (not between the two recoveries) as described in Section 12.4.

9.3.2.3 If the RPD is less than 20%, and the recoveries for the MS and MSD are within the range of 78 to 116%, the results are acceptable.

9.3.2.4 If the RPD is greater than 20%, analyze two aliquots of the precision and recovery standard (PAR).

9.3.2.4.1 If the RPD for the two aliquots of the PAR is greater than 20%, the analytical system is out of control. In this case, repair the problem and repeat the analysis of the sample batch, including the MS/MSD.

9.3.2.4.2 If, however, the RPD for the two aliquots of the PAR is less than 20%, dilute the sample chosen for the MS/MSD by a factor of 2–10 (to remain within the working range of the analytical system) and repeat the MS/MSD test. If the RPD is still greater than 20%, the result may not be reported for regulatory compliance purposes. In this case, choose another sample for the MS/MSD and repeat analysis of the sample batch.

9.3.2.5 If the percent recovery for both the MS and MSD are less than 78% or greater

than 116%, analyze the precision and recovery (PAR) standard.

9.3.2.5.1 If the recovery of the PAR is outside the 78 to 116% range, the analytical system is out of control. In this case, repair the problem and repeat the analysis of the sample batch, including the MS/MSD.

9.3.2.5.2 If the recovery of the PAR is within the range of 78 to 116%, dilute the sample, MS, and MSD by a factor of 2–10 (to remain within the working range of the analytical system) and re-analyze. If the results of the dilute analyses remain outside of the acceptable range, these results may not be reported for regulatory compliance purposes. In this case, choose another sample for the MS/MSD and repeat the analysis of the sample batch.

9.4 Blanks.

9.4.1 Reagent water blanks: Analyzed to demonstrate freedom from contamination.

9.4.1.1 Analyze a reagent water blank with each batch of samples. The blank must be analyzed immediately preceding calibration verification to allow for blank subtraction and to demonstrate freedom from contamination and memory effects, and must include all details of the procedure to be followed when analyzing samples.

9.4.1.2 Prepare the reagent water blank using a volume of reagent water equivalent to the volume used for sample preparation (Section 11.1). If using the micro-column procedure, adsorb the method blank using two columns, as described in Section 11. Combust the GAC from each column separately, as described in Section 11.

9.4.1.3 If the result from the blank from the batch method or the sum of the results from two columns is more than 20 µg/L, analysis of samples is halted until the source of contamination is eliminated and a blank shows no evidence of contamination at this level.

9.4.2 Nitrate-washed GAC blanks: Analyzed daily to demonstrate that the GAC is free from contamination.

9.4.2.1 Nitrate-washed GAC blank for the batch procedure: Analyze a batch nitrate-washed GAC blank by adding a scoop of dry GAC to the assembled filter apparatus containing the polycarbonate membrane and washing the GAC with the nitrate wash solution (Section 7.10) using the procedure in Section 11.2.6.

9.4.2.2 Nitrate-washed GAC blank for the column procedure: Analyze a column nitrate-washed GAC blank by assembling two carbon columns in series and washing the columns with the nitrate wash solution (Section 7.10) using the procedure in Section 11.3.4.2. Analyze the GAC in each column separately. The results of the second analysis must be within ±0.2 µg Cl^- of the first. A difference greater than 0.2 µg Cl^- indicates a lack of homogeneity in the GAC that could introduce unacceptable variability. If the difference exceeds this amount, the GAC should be replaced.

9.4.3 The result for the reagent water blank (Section 9.4.1) shall not exceed the result for the nitrate wash blank (Section 9.4.2.1 or 9.4.2.2) by more than 0.5 µg Cl^-.

9.5 Granular activated carbon (GAC) batch testing: Each lot number or batch of activated carbon received from a supplier is tested once before use to ensure adequate quality. Use only GAC that meets the test criteria below.

9.5.1 Contamination test: Analyze a scoop of GAC. Reject carbon if the amount of OX exceeds 1 µg (25 µg Cl^-/g).

9.5.2 Inorganic chloride adsorption test: Attempt to adsorb NaCl from 100 mL of a solution containing 100 mg/L in reagent water. Wash with nitrate solution and analyze. The amount of halide should be less than 1 µg Cl^- larger than the blank. A larger amount indicates significant uptake of inorganic chloride by the carbon. Reject carbon if the 1 µg level is exceeded.

9.6 Samples that are being used for regulatory compliance purposes shall be analyzed in duplicate.

9.6.1 The procedure for preparing duplicate sample aliquots is described in Section 11.5.

9.6.2 Calculate the RPD by following the same procedure described in Section 12.4.

9.6.3 If the RPD is greater than 20%, the analyses must be repeated.

9.6.4 If the RPD remains greater than 20%, the result may not be reported for regulatory compliance purposes.

9.7 The specifications in this method can be met if the apparatus used is calibrated properly and maintained in a calibrated state. The standards used for calibration (Section 10), calibration verification (Section 9.9), and for initial (Section 9.2.2) and ongoing (Section 9.10) precision and recovery should be identical, so that the most precise results will be obtained.

9.8 Depending on specific program requirements, field duplicates may be collected to determine the precision of the sampling technique.

9.9 At the beginning and end of each eight-hour shift during which analyses are performed, system performance and calibration are verified. Verification of system performance and calibration may be performed more frequently, if desired.

9.9.1 If performance and calibration are verified at the beginning and end of each shift (or more frequently), samples analyzed during that period are considered valid.

9.9.2 If performance and calibration are not verified at both the beginning and end of a shift (or more frequently), samples analyzed during that period must be reanalyzed.

9.9.3 If calibration is verified at the beginning of a shift, recalibration using the five standards described in Section 10.6 is not

necessary; otherwise, the instrument must be recalibrated prior to analyzing samples (Section 10).

9.9.4 Cell maintenance and other changes to the analytical system that can affect system performance may not be performed during the eight-hour (or shorter) shift.

9.10 Calibration verification and ongoing precision and recovery: Calibration and system performance are verified by the analysis of the 100 μg/L PAR standard.

9.10.1 Analyze a blank (Section 9.4) and analyze the PAR standard (Section 7.12.4) immediately thereafter at the beginning and end of each shift. Compute the concentration of organic halide in the blank and in the PAR standard using the procedures in Section 12. The blank shall be less than 2 μg Cl^- (20 μg/L equivalent).

9.10.2 Subtract the result for the blank from the result of the PAR standard using the procedures in Section 12, and compute the percent recovery of the blank-subtracted PAR standard. The percent recovery shall be in the range of 78 to 116%.

9.10.3 If the recovery is within this range, the analytical process is in control and analysis of blanks and samples may proceed. If, however, the recovery is not within the acceptable range, the analytical process is not in control. In this event, correct the problem and repeat the ongoing precision and recovery test (Section 9.10), or recalibrate (Sections 10.5 through 10.6).

9.10.4 If the recovery is not within the acceptable range for the PAR standard analyzed at the end of the eight-hour shift, correct the problem, repeat the ongoing precision and recovery test (Section 9.10), or recalibrate (Sections 10.5 through 10.6), and reanalyze the sample batch that was analyzed during the eight-hour shift.

9.10.5 If the recovery is within the acceptable range at the end of the shift, and samples are to be analyzed during the next eight-hour shift, the end of shift verification may be used as the beginning of shift verification for the subsequent shift, provided the next eight-hour shift begins as the first shift ends.

9.11 It is suggested but not required that the laboratory develop a statement of data quality for AOX and develop QC charts to form a graphic demonstration of method performance. Add results that pass the specification in Section 9.10.2 to initial and previous ongoing data. Develop a statement of data quality by calculating the average percent recovery (R) and the standard deviation of percent recovery (s_r). Express the accuracy as a recovery interval from $R - 2s_r$ to $R = 2s_r$. For example, if R=95% and s_r=5%, the accuracy is 85 to 105%.

10.0 Calibration and Standardization

10.1 Assemble the OX system and establish the operating conditions necessary for analysis. Differences between various makes and models of instruments will require different operating procedures. Laboratories should follow the operating instructions provided by the manufacturer of their particular instrument. Sensitivity, instrument detection limit, precision, linear range, and interference effects must be investigated and established for each particular instrument. Calibration is performed when the instrument is first set up and when calibration cannot be verified (Section 9.9).

10.2 Cell performance test: Inject 100 μL of the sodium chloride solution (10 μg Cl^-; Section 7.4) directly into the titration cell electrolyte. Adjust the instrument to produce a reading of 10 μg Cl^-.

10.3 Combustion system test: This test can be used to assure that the combustion/micro-coulometer systems are performing properly without introduction of carbon. This test should be used during initial instrument setup and when instrument performance indicates a problem with the combustion system.

10.3.1 Designate a quartz boat for use with the ammonium chloride (NH_4Cl) solution only.

10.3.2 Inject 100 μL of the NH_4Cl solution (Section 7.5) into this boat and proceed with the analysis.

10.3.3 The result shall be between 9.5 and 10.5 μg Cl^-. If the recovery is not between these limits, the combustion or micro-coulometer systems are not performing properly. Check the temperature of the combustion system, verify that there are no leaks in the combustion system, confirm that the cell is performing properly (Section 10.2), and then repeat the test.

10.4 Trichlorophenol combustion test: This test can be used to assure that the combustion/micro-coulometer systems are performing properly when carbon is introduced. It should be used during instrument setup and when it is necessary to isolate the adsorption and combustion steps.

10.4.1 Inject 10 μL of the 1 mg/mL trichlorophenol stock solution (Section 7.12.2) onto one level scoop of GAC in a quartz boat.

10.4.2 Immediately proceed with the analysis to prevent loss of trichlorophenol and to prevent contamination of the carbon.

10.4.3 The result shall be between 9.0 and 11.0 μg Cl^-. If the recovery is not between these limits, the combustion/micro-coulometer system shall be adjusted and the test repeated until the result falls within these limits.

10.5 Background level of Cl^-: Determine the average background level of Cl^- for the entire analytical system as follows:

10.5.1 Using the procedure in Section 11 (batch or column) that will be used for the analysis of samples, determine the background level of Cl^- in each of three portions of reagent water. The volume of reagent

water used shall be the same as the volume used for analysis of samples.

10.5.2 Calculate the average (mean) concentration of Cl^- and the standard deviation of the concentration.

10.5.3 The sum of the average concentration plus two times the standard deviation of the concentration shall be less than 20 μg/L. If not, the water or carbon shall be replaced, or the adsorption system moved to an area free of organic halide vapors, and the test (Section 10.5) shall be repeated. Only after this test is passed may calibration proceed.

10.6 Calibration by external standard: A calibration line encompassing the calibration range is developed using solutions of 2,4,6-trichlorophenol.

10.6.1 Analyze each of the five calibration solutions (Section 7.12.3) using the procedure in Section 11 (batch or column) that will be used for the analysis of samples, and the same procedure that was used for determination of the system background (Section 10.5). Analyze these solutions beginning with the lowest concentration and proceeding to the highest. Record the response of the micro-coulometer to each calibration solution.

10.6.2 Prepare a method blank as described in Section 9.4. Subtract the value of the blank from each of the five calibration results, as described in Section 12.

10.6.3 Calibration factor (ratio of response to concentration) Using the blank subtracted results, compute the calibration factor at each calibration point, and compute the average calibration factor and the relative standard deviation (coefficient of variation; Cv) of the calibration factor over the calibration range.

10.6.4 Linearity: The Cv of the calibration factor shall be less than 20%; otherwise, the calibration shall be repeated after adjustment of the combustion/micro-coulometer system and/or preparation of fresh calibration standards.

10.6.5 Using the average calibration factor, compute the percent recovery at each calibration point. The recovery at each calibration point shall be within the range of 80 to 111%. If any point is not within this range, a fresh calibration standard shall be prepared for that point, this standard shall be analyzed, and the calibration factor (Section 10.6.3) and calibration linearity (Section 10.6.4) shall be computed using the new calibration point. All points used in the calibration must meet the 80 to 111% recovery specification.

11.0 Procedure

11.1 Sample dilution: Many samples will contain high concentrations of halide. If analyzed without dilution, the micro-coulometer can be overloaded, resulting in frequent cell cleaning and downtime. The following guidance is provided to assist in estimating dilution levels.

11.1.1 Paper and pulp mills that employ chlorine bleaching: Samples from pulp mills that use a chlorine bleaching process may overload the micro-coulometer. To prevent system overload, the maximum volume suggested for paper industry samples that employ halide in the bleaching process is 100 mL. An adsorption volume as small as 25 mL may be used, provided the concentration of AOX in the sample can be measured reliably, as defined by the requirements in Section 9.11. To minimize volumetric error, an adsorption volume less than 25 mL may not be used. If AOX cannot be measured reliably in a 100-mL sample volume, a sample volume to a maximum of 1000 mL must be used. The sample and adsorption volumes are suggested for paper industry samples employing chlorine compounds in the bleaching process:

Paper or pulp mill stream	Sample volume (mL)*	Adsorption volume (mL)
Evaporator condensate	100.0	100
Process water	100.0	100
Pulp mill effluent	30.0	50
Paper mill effluent	10.0	25
Combined mill effluent	5.0	25
Combined bleach effluent	1.0	25
C-stage filtrate	0.5	25
E-stage filtrate	0.5	25

*Assumes dilution to final volume of 100 mL. All sample aliquots (replicates, diluted samples) must be analyzed using the same fixed final volume (sample volume plus reagent water, as needed).

11.1.2 Sample dilution procedure.

11.1.2.1 Partially fill a precleaned volumetric flask with pH < 2 reagent water, allowing for the volume of sample to be added.

11.1.2.2 Mix sample thoroughly by tumbling or shaking vigorously.

11.1.2.3 Immediately withdraw the required sample aliquot using a pipet or micro-syringe.

NOTE: Because it will be necessary to rinse the pipet or micro-syringe (Section 11.1.2.5), it may be necessary to pre-calibrate the

pipet or micro-syringe to assure that the exact volume desired will be delivered.

11.1.2.4 Dispense or inject the aliquot into the volumetric flask.

11.1.2.5 Rinse the pipet or syringe with small portions of reagent water and add to the flask.

11.1.2.6 Dilute to the mark with pH < 2 reagent water.

11.1.3 All samples to be reported for regulatory compliance monitoring purposes must be analyzed in duplicate, as described in Section 11.5.

11.1.4 Pulp and Paper in-process samples: The concentration of organic halide in in-process samples has been shown to be 20 to 30% greater using the micro-column adsorption technique than using the batch adsorption technique. For this reason, the micro-column technique shall be used for monitoring in-process samples. Examples of in-process samples include: combined bleach plant effluent, C-stage filtrate, and E-stage filtrate.

11.2 Batch adsorption and filtration.

11.2.1 Place the appropriate volume of sample (diluted if necessary), preserved as described in Section 8, into an Erlenmeyer flask.

11.2.2 Add 5 mL of nitrate stock solution to the sample aliquot.

11.2.3 Add one level scoop of activated carbon that has passed the quality control tests in Section 9.

11.2.4 Shake the suspension for at least one hour in a mechanical shaker.

11.2.5 Filter the suspension through a polycarbonate membrane filter. Filter by suction until the liquid level reaches the top of the carbon.

11.2.6 Wash the inside surface of the filter funnel with 25 mL (±5 mL) of nitrate wash solution in several portions. After the level of the final wash reaches the top of the GAC, filter by suction until the cake is barely dry. The time required for drying should be minimized to prevent exposure of the GAC to halogen vapors in the air, but should be sufficient to permit drying of the cake so that excess water is not introduced into the combustion apparatus. A drying time of approximately 10 seconds under vacuum has been shown to be effective for this operation.

11.2.7 Carefully remove the top of the filter holder, making sure that no carbon is lost. This operation is most successfully performed by removing the clamp, tilting the top of the filter holder (the funnel portion) to one side, and lifting upward.

11.2.8 Using a squeeze bottle or micro-syringe, rapidly rinse the carbon from the inside of the filter holder onto the filter cake using small portions of wash solution. Allow the cake to dry under vacuum for no more than 10 seconds after the final rinse. Immediately turn the vacuum off.

11.2.9 Using tweezers, carefully fold the polycarbonate filter in half, then in fourths, making sure that no carbon is lost.

11.3 Column adsorption.

11.3.1 Column preparation: Prepare a sufficient number of columns for one day's operation as follows:

11.3.1.1 In a glove box or area free from halide vapors, place a plug of Cerafelt into the end of a clean glass column.

11.3.1.2 Fill the glass column with one level scoop (approximately 40 mg) of granular activated carbon that has passed the quality control tests in Section 9.

11.3.1.3 Insert a Cerafelt plug into the open end of the column to hold the carbon in place.

11.3.1.4 Store the columns in a glass jar with PTFE lined screw-cap to prevent infiltration of halide vapors from the air.

11.3.2 Column setup.

11.3.2.1 Install two columns in series in the adsorption module.

11.3.2.2 If the sample is known or expected to contain particulates that could prevent free flow of sample through the micro-columns, a Cerafelt plug is placed in the tubing ahead of the columns. If a measurement of the OX content of the particulates is desired, the Cerafelt plug can be washed with nitrate solution, placed in a combustion boat, and processed as a separate sample.

11.3.3 Adjusting sample flow rate: Because the flow rate used to load the sample onto the columns can affect the ability of the GAC to adsorb organic halides, the flow rate of the method blank is measured, and the gas pressure used to process samples is adjusted accordingly. The flow rate of the blank, which is composed of acidified reagent water and contains no particulate matter, should be greater than the flow rate of any sample containing even small amounts of particulate matter.

11.3.3.1 Fill the sample reservoir with the volume of reagent water chosen for the analysis (Section 9.4.1.2) that has been preserved and acidified as described in Section 8. Cap the reservoir.

11.3.3.2 Adjust the gas pressure per the manufacturer's instructions. Record the time required for the entire volume of reagent water to pass through both columns. The flow rate must not exceed 3 mL/min over the duration of the time required to adsorb the volume. If this flow rate is exceeded, adjust gas pressure, prepare another blank, and repeat the adsorption.

11.3.3.3 Once the flow rate for the blank has been established, the same adsorption conditions must be applied to all subsequent samples during that eight-hour shift, or until another method blank is processed, whichever comes first. To aid in overcoming breakthrough problems, a lower gas pressure (and, therefore, flow rate) may be used for

processing of samples, if desired. If the sample adsorption unit is disassembled or cleaned, the flow rate must be checked before processing additional samples.

11.3.3.4 Elute the pair of columns with 2 mL of nitrate wash solution. The flow rate of nitrate wash solution must not exceed 3 mL/min.

11.3.3.5 Separate the columns and mark for subsequent analysis.

11.3.4 The adsorption of sample volumes is performed in a similar fashion. Fill the sample reservoir with the sample volume chosen for the analysis (Section 11.1), that has been preserved as described in Section 8. All analyses must be performed with this volume (sample volume plus reagent water, as needed) in order to maintain a flow rate no greater than that determined for the blank (see Section 11.3.3).

11.3.4.1 Use the same gas pressure for sample adsorption as is used for the blank.

11.3.4.2 Elute the columns with 2 mL of the nitrate wash solution.

11.3.4.3 Separate the columns and mark for subsequent analysis.

11.3.5 If it is desirable to make measurements at levels lower than can be achieved with the sample volume chosen, or if the instrument response of an undiluted sample is less than three times the instrument response of the blank (Section 12.6.3), a larger sample volume must be used.

11.4 Combustion and titration.

11.4.1 Polycarbonate filter and GAC from batch adsorption.

11.4.1.1 Place the folded polycarbonate filter containing the GAC in a quartz combustion boat, close the airlock, and proceed with the automated sequence.

11.4.1.2 Record the signal from the microcoulometer for a minimum integration time of 10 minutes and determine the concentration of Cl^- from calibration data, per Section 12.

11.4.2 Columns from column adsorption.

11.4.2.1 Using the push rod, push the carbon and the Cerafelt plug(s) from the first column into a combustion boat. Proceed with the automated sequence.

11.4.2.2 Record the signal from the microcoulometer for a minimum integration time of 10 minutes and determine the concentration of Cl^- for the first column from calibration data, per Section 12.

11.4.2.3 Repeat the automated sequence with the second column.

11.4.2.4 Determine the extent of breakthrough of organic halides from the first column to the second column, as described in Section 12.

11.4.3 The two columns that are used for the method blank must be combusted separately, as is done for samples. 11.5 Duplicate sample analysis: All samples to be reported for regulatory compliance purposes must be analyzed in duplicate. This requirement applies to both the batch and column adsorption procedures. In addition, if it is necessary to dilute the sample for the purposes of reducing breakthrough or maintaining the concentration within the calibration range, a more or less dilute sample must be analyzed. The adsorption volumes used for analysis of undiluted samples, diluted samples, and all replicates must be the same as the volume used for QC tests and calibration (Sections 9 and 10).

11.5.1 Using results from analysis of one sample volume (Section 11.4) and the procedure in Section 11.1.2, determine if the dilution used was within the calibration range of the instrument and/or if breakthrough exceeded the specification in Section 12.3.1. If the breakthrough criterion was exceeded or the sample was not within the calibration range, adjust the dilution volume as needed. If the breakthrough criterion was not exceeded and the sample dilution was within the calibration range, a second volume at the same dilution level may be used.

11.5.2 Adsorb the sample using the same technique (batch or column) used for the first sample volume. Combust the GAC from the second volume as described in Section 11.4, and calculate the results as described in Section 12. Compare the results of the two analyses as described in Section 12.4.

11.5.3 Duplicate analyses are not required for method blanks, as different dilution levels are not possible.

11.5.4 Duplicate analyses of the PAR standard used for calibration verification (Section 9.10) are not required.

12.0 Data Analysis and Calculations

12.1 Batch Adsorption Method: Calculate the blank-subtracted concentration of adsorbable organic halide detected in each sample (in micrograms of chloride per liter) using the following equation:

$$\mathrm{AOX}(\mu\mathrm{g/L}) = \frac{(\mathrm{C} - \mathrm{B})}{\mathrm{V}}$$

Where:

C=μg Cl^- from micro-coulometer for the sample

B=μg Cl^- from micro-coulometer for the reagent water blank (Section 9.4.1)

V = volume of sample in liters

This calculation is performed for each of the two dilution levels analyzed for each sample.

12.2 Column Adsorption Method: Calculate the blank-subtracted concentration of adsorbable organic halide detected in each sample (in micrograms of chloride per liter) using the following equation:

$$AOX(\mu g/L) = \frac{\left[\left(C_1 + C_2\right) - \left(B_1 + B_2\right)\right]}{V}$$

C_1=µg Cl^- from micro-coulometer for first column from the sample

C_2=µg Cl^- from micro-coulometer for second column from the sample

B_1=µg from micro-coulometer for first column from the reagent water blank (Section 9.4.1)

B_2=µg Cl^- from micro-coulometer for second column from the reagent water blank (Section 9.4.1)

V=volume of sample in liters

12.3 Percent breakthrough: For each sample analyzed by the column method, calculate the percent breakthrough of halide from the first column to the second column, using the following equation:

$$\%\,\text{Breakthrough} = \frac{(C_2 - B_2)(100)}{\left[\left(C_1 - B_1\right) + \left(C_2 - B_2\right)\right]}$$

12.3.1 For samples to be reported for regulatory compliance purposes, the percent breakthrough must be less than or equal to 25% for both of the two analyses performed on each sample (see Section 11.5).

12.3.2 If the breakthrough exceeds 25%, dilute the affected sample further, maintaining the amount of halide at least three times higher than the level of blank, and reanalyze the sample. Ensure that the sample is also analyzed at a second level of dilution that is at least a factor of 2 different (and still higher than three times the blank).

12.4 Relative percent difference (RPD): Calculate the relative percent difference between the results of the two analyses of each sample, using the following equation:

$$RPD = \frac{200\left|\left(AOX_1 - AOX_2\right)\right|}{\left[\left(AOX_1 + AOX_2\right)\right]}$$

12.5 High concentrations of AOX: If the amount of halide from either analysis exceeds the calibration range, dilute the sample and reanalyze, maintaining at least a factor of 2 difference in the dilution levels of the two portions of the sample used.

12.6 Low concentrations of AOX: The blank-subtracted final result from the batch procedure or the sum of the blank-subtracted results from the two carbon columns should be significantly above the level of the blank.

12.6.1 If the instrument response for a sample exceeds the instrument response for the blank by a factor of at least 3, the result is acceptable.

12.6.2 If the instrument response for a sample is less than three times the instrument response for the blank, and the sample has been diluted, analyze a less dilute aliquot of sample.

12.6.3 If the instrument response of an undiluted sample containing AOX above the minimum level is less than three times the instrument response for the blank, the result is suspect and may not be used for regulatory compliance purposes. In this case, find the cause of contamination, correct the problem, and reanalyze the sample under the corrected conditions.

12.7 Report results that meet all of the specifications in this method as the mean of the blank-subtracted values from Section 12.1 or 12.2 for the two analyses at different dilution levels, in µg/L of Cl^- (not as 2,4,6-trichlorophenol), to three significant figures. Report the RPD of the two analyses. For samples analyzed by the column procedure, also report the percent breakthrough.

13.0 Method Performance

The specifications contained in this method are based on data from a single laboratory and from a large-scale study of the pulp and paper industry.

14.0 Pollution Prevention

14.1 The solvents used in this method pose little threat to the environment when recycled and managed properly.

14.2 Standards should be prepared in volumes consistent with laboratory use to minimize the volume of expired standards to be disposed.

15.0 Waste Management

15.1 It is the laboratory's responsibility to comply with all federal, state, and local regulations governing waste management, particularly the hazardous waste identification rules and land disposal restrictions, and to protect the air, water, and land by minimizing and controlling all releases from fume hoods and bench operations. Compliance with all sewage discharge permits and regulations is also required.

15.2 Samples preserved with HCl or H_2SO_4 to pH <2 are hazardous and must be neutralized before being disposed, or must be handled as hazardous waste. Acetic acid and silver acetate solutions resulting from cell flushing must be disposed of in accordance with all applicable federal, state, and local regulations.

15.3 For further information on waste management, consult ''The Waste Management Manual for Laboratory Personnel,'' and ''Less is Better: Laboratory Chemical Management for Waste Reduction,'' both available from the American Chemical Society's Department of Government Relations and Science Policy, 1155 16th Street NW., Washington, DC 20036.

16.0 References

16.1 ''Total Organic Halide, Methods 450.1—Interim,'' Prepared by Stephen Billets and James J. Lichtenberg, USEPA, Office of Research and Development, Physical and Chemical Methods Branch, EMSL-Cincinnati, Cincinnati, OH 45268, EPA 600/4–81–056 (1981).

16.2 Method 9020, USEPA Office of Solid Waste, ''Test Methods for Evaluating Solid Waste, SW–846,'' Third Edition, 1987.

16.3 ''Determination of Adsorbable Organic Halogens (AOX),'' ''German Standard Methods for the Analysis of Water, Waste Water and Sludge—General Parameters of Effects and Substances,'' Deutsche Industrie Norm (DIN) Method 38 409, Part 14, DIN German Standards Institute, Beuth Verlag, Berlin, Germany (1987).

16.4 ''Water Quality: Determination of Adsorbable Organic Halogens (AOX),'' International Organization for Standard/Draft International Standardization (ISO/DIS) Method 9562 (1988).

16.5 ''Organically Bound Chlorine by the AOX Method,'' SCAN–W 9:89, Secretariat, Scandinavian Pulp, Paper and Board Testing Committee, Box 5604, S–11486, Stockholm, Sweden (1989).

16.6 Method 5320, ''Dissolved Organic Halogen,'' from ''Standard Methods for the Examination of Water and Wastewater,'' 5320, American Public Health Association, 1015 15th St. NW, Washington, DC 20005 (1989).

16.7 ''Canadian Standard Method for the Determination of Adsorbable Organic Halides (AOX) in Waters and Wastewaters,'' Environment Canada and The Canadian Pulp and Paper Association (1990).

16.8 40 CFR Part 136, Appendix B.

16.9 ''Working with Carcinogens,'' DHEW, PHS, CDC, NIOSH, Publication 77–206, (Aug 1977).

16.10 ''OSHA Safety and Health Standards, General Industry'' OSHA 2206, 29 CFR 1910 (Jan 1976).

16.11 ''Safety in Academic Chemistry Laboratories,'' ACS Committee on Chemical Safety (1979).

16.12 ''Methods 330.4 and 330.5 for Total Residual Chlorine,'' USEPA, EMSL-Cincinnati, Cincinnati, OH 45268, EPA–4–79–020 (March 1979).

16.13 ''Validation of Method 1650: Determination of Organic Halide,'' Analytical Technologies Inc., ERCE Contract 87–3410, November 15, 1990. Available from the EPA Sample Control Center, DynCorp, 300 N. Lee St., Alexandria, VA 22314 (703–519–1140).

17.0 Figures

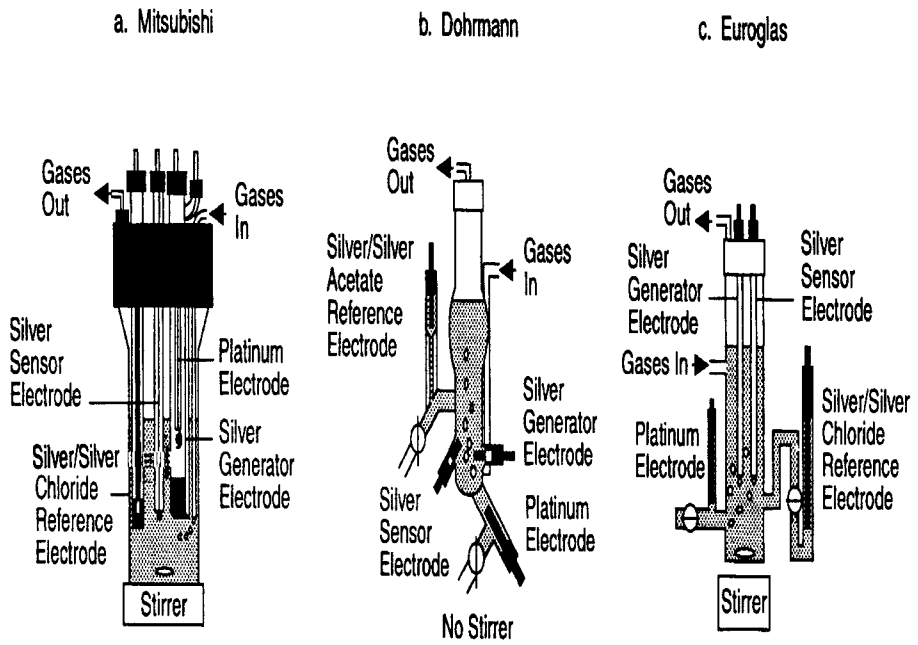

Figure 1. Microcoulometric Titration Cells (from Reference 7)

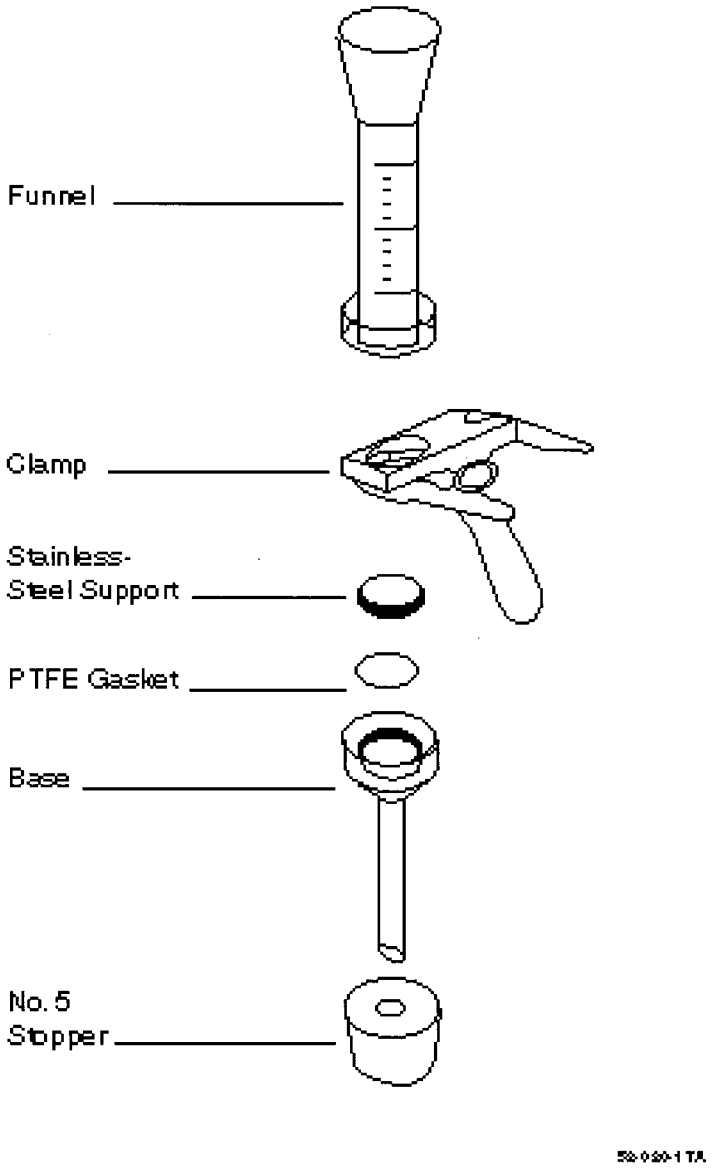

Figure 2. Filter Apparatus

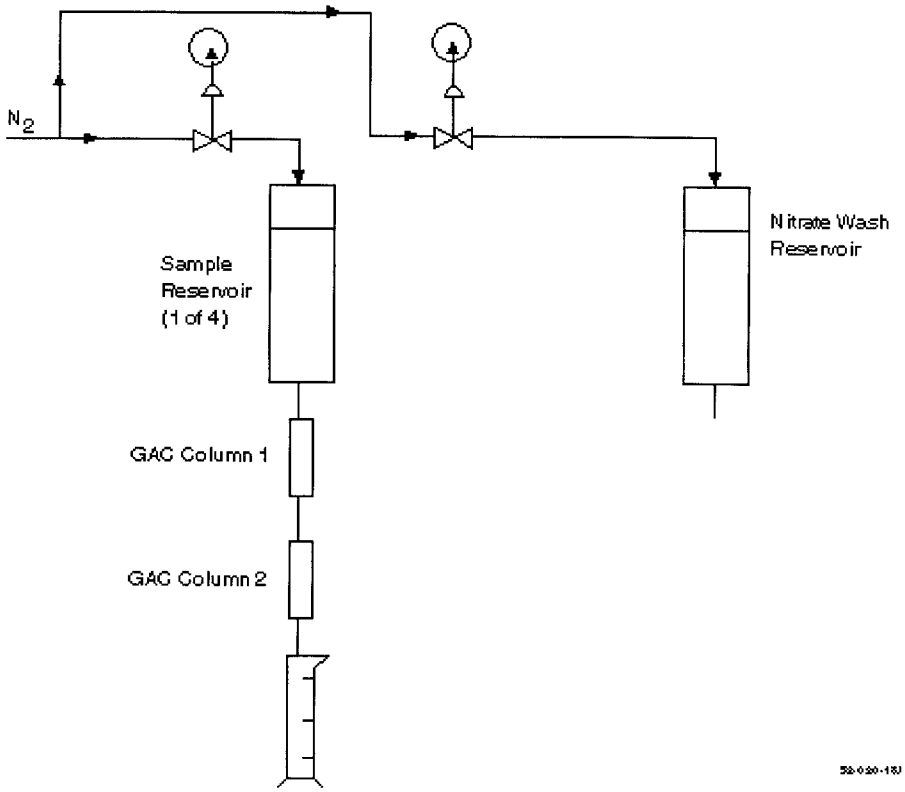

Figure3. Schematic of the Column Adsorption System

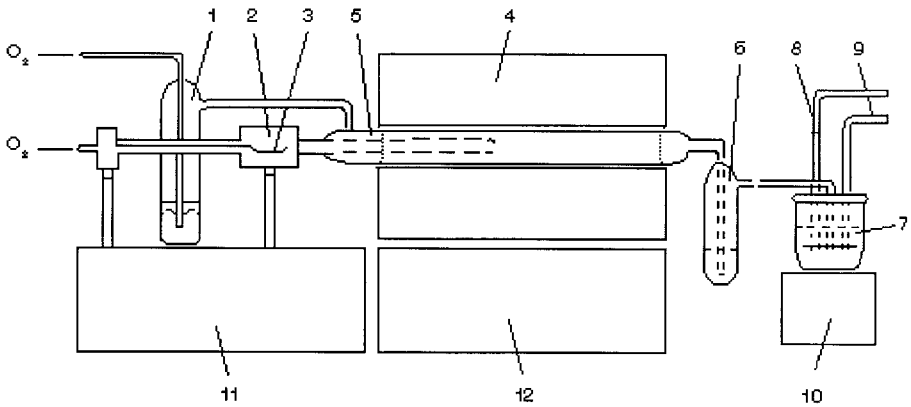

1. Stripping Device
2. Sample inlet for AOX
3. AOX Sample
4. Furnace
5. Combustion Tube
6. Absorber filled with H_2SO_4
7. Titration cell
8. Working electrodes
9. Measuring electrodes
10. Stirrer
11. Titration micro-processor
12. Gas flow and temperature control device

Figure 4. Schematic of an AOX Apparatus

18.0 Glossary of Definitions and Purposes

These definitions and purposes are specific to this method but have been conformed to common usage as much as possible.

18.1 Units of weight and measure and their abbreviations.

18.1.1 Symbols.

°C degrees Celsius
µg microgram
µL microliter
< less than
> greater than
% percent

18.1.2 Alphabetical characters.

cm centimeter
g gram
h hour
ID inside diameter
in inch
L liter
m meter
mg milligram
min minute
mL milliliter
mm millimeter

N normal; gram molecular weight of solute divided by hydrogen equivalent of solute, per liter of solution
OD outside diameter
ppb part-per-billion
ppm part-per-million
ppt part-per-trillion
psig pounds-per-square inch gauge
v/v volume per unit volume
w/v weight per unit volume

18.2 Definitions and acronyms (in alphabetical order).

Analyte: AOX tested for by this method.

Calibration standard (CAL): A solution prepared from a secondary standard and/or stock solution which is used to calibrate the response of the instrument with respect to analyte concentration.

Calibration verification standard (VER): The mid-point calibration standard (CS3) that is used to verify calibration.

Field blank: An aliquot of reagent water or other reference matrix that is placed in a sample container in the laboratory or the field, and treated as a sample in all respects, including exposure to sampling site conditions, storage, preservation, and all analytical procedures. The purpose of the field blank is to determine if the field or sample transporting procedures and environments have contaminated the sample.

IPR: Initial precision and recovery; four aliquots of the diluted PAR standard analyzed to establish the ability to generate acceptable precision and accuracy. An IPR is performed prior to the first time this method is used and any time the method or instrumentation is modified.

Laboratory blank: See Method blank.

Laboratory control sample (LCS): See Ongoing precision and recovery sample (OPR).

Laboratory reagent blank: See Method blank.

May: This action, activity, or procedural step is neither required nor prohibited.

May not: This action, activity, or procedural step is prohibited.

Method blank: An aliquot of reagent water that is treated exactly as a sample including exposure to all glassware, equipment, solvents, reagents, internal standards, and surrogates that are used with samples. The method blank is used to determine if analytes or interferences are present in the laboratory environment, the reagents, or the apparatus.

Minimum level (ML): The level at which the entire analytical system must give a recognizable signal and acceptable calibration point for the analyte. It is equivalent to the concentration of the lowest calibration standard, assuming that all method-specified sample weights, volumes, and cleanup procedures have been employed.

Must: This action, activity, or procedural step is required.

OPR: Ongoing precision and recovery standard; a laboratory blank spiked with a known quantity of analyte. The OPR is analyzed exactly like a sample. Its purpose is to assure that the results produced by the laboratory remain within the limits specified in this method for precision and recovery.

PAR: Precision and recovery standard; secondary standard that is diluted and spiked to form the IPR and OPR.

Preparation blank: See Method blank.

Primary dilution standard: A solution containing the specified analytes that is purchased or prepared from stock solutions and diluted as needed to prepare calibration solutions and other solutions.

Quality control check sample (QCS): A sample containing all or a subset of the analytes at known concentrations. The QCS is obtained from a source external to the laboratory or is prepared from a source of standards different from the source of calibration standards. It is used to check laboratory performance with test materials prepared external to the normal preparation process.

Reagent water: Water demonstrated to be free from the analyte of interest and potentially interfering substances at the method detection limit for the analyte.

Relative standard deviation (RSD): The standard deviation multiplied by 100, divided by the mean.

RSD: See Relative standard deviation.

Should: This action, activity, or procedural step is suggested but not required.

Stock solution: A solution containing an analyte that is prepared using a reference material traceable to EPA, the National Institute of Science and Technology (NIST), or a source that will attest to the purity and authenticity of the reference material.

VER: See Calibration verification standard.

Method 1653—Chlorinated Phenolics in Wastewater by In Situ Acetylation and GCMS

1.0 Scope and Application

1.1 This method is for determination of chlorinated phenolics (chlorinated phenols, guaiacols, catechols, vanillins, syringaldehydes) and other compounds associated with the Clean Water Act; the Resource Conservation and Recovery Act; and the Comprehensive Environmental Response, Compensation, and Liability Act; and that are amenable to in situ acetylation, extraction, and analysis by capillary column gas chromatography/mass spectrometry (GCMS). This method is based on existing methods for determination of chlorophenolics in pulp and paper industry wastewaters (References 1 and 2).

1.2 The chemical compounds listed in Table 1 may be determined in waters and, specifically, in in-process streams and

wastewaters associated with the pulp and paper industry. The method is designed to meet the survey and monitoring requirements of the Environmental Protection Agency (EPA).

1.3 The detection limit of this method is usually dependent on the level of interferences rather than instrumental limitations. The method detection limits (MDLs) in Table 2 typify the minimum quantity that can be detected with no interferences present.

1.4 The GCMS portions of this method are for use only by persons experienced with GCMS or under the close supervision of such qualified persons. Laboratories unfamiliar with analyses of environmental samples by GCMS should run the performance tests in Reference 3 before beginning.

1.5 Any modification of the method beyond those expressly permitted is subject to the application and approval of alternative test procedures under 40 CFR Parts 136.4 and 136.5.

2.0 Summary of Method

2.1 A 1000-mL aliquot of water is spiked with stable isotopically labeled analogs of the compounds of interest and an internal standard. The solution is adjusted to neutral pH, potassium carbonate buffer is added, and the pH is raised to 9–11.5. The chlorophenolics are converted in situ to acetates by the addition of acetic anhydride. After acetylation, the solution is extracted with hexane. The hexane is concentrated to a final volume of 0.5 mL, an instrument internal standard is added, and an aliquot of the concentrated extract is injected into the gas chromatograph (GC). The compounds are separated by GC and detected by a mass spectrometer (MS). The labeled compounds and internal standard serve to correct the variability of the analytical technique.

2.2 Identification of a pollutant (qualitative analysis) is performed by comparing the relative retention time and mass spectrum to that of an authentic standard. A compound is identified when its relative retention time and mass spectrum agree.

2.3 Quantitative analysis is performed in one of two ways by GCMS using extracted ion-current profile (EICP) areas: (1) For those compounds listed in Table 1 for which standards and labeled analogs are available, the GCMS system is calibrated and the compound concentration is determined using an isotope dilution technique; (2) for those compounds listed in Table 1 for which authentic standards but no labeled compounds are available, the GCMS system is calibrated and the compound concentration is determined using an internal standard technique.

2.4 Quality is assured through reproducible calibration and testing of the extraction and GCMS systems.

3.0 Definitions

3.1 Chlorinated phenolics are the chlorinated phenols, guaiacols, catechols, vanillins, syringaldehydes and other compounds amenable to in situ acetylation, extraction, and determination by GCMS using this method.

3.2 Definitions for other terms used in this method are given in the glossary at the end of the method (Section 20.0).

4.0 Interferences

4.1 Solvents, reagents, glassware, and other sample processing hardware may yield artifacts and/or elevated baselines, causing misinterpretation of chromatograms and spectra. All materials used in the analysis shall be demonstrated to be free from interferences under the conditions of analysis by running method blanks initially and with each sample batch (samples started through the extraction process on a given eight-hour shift, to a maximum of 20). Specific selection of reagents and purification of solvents by distillation in all-glass systems may be required. Glassware and, where possible, reagents are cleaned by using solvent rinse and baking at 450 °C for a minimum of one hour.

4.2 Interferences co-extracted from samples will vary considerably from source to source, depending on the diversity of the site being sampled. Industry experience suggests that high levels of non-chlorinated phenols may cause poor recovery of the compounds of interest, particularly in samples collected in the vicinity of a source of creosote, such as a wood-preserving plant (Reference 1).

4.3 The internal standard, 3,4,5-trichlorophenol, has been reported to be an anaerobic degradation product of 2,3,4,5-tetrachlorophenol and/or pentachlorophenol (Reference 1). When an interference with this or another compound occurs, labeled pentachlorophenol or another labeled compound may be used as an alternative internal standard; otherwise, the internal standards and reference compounds must be used as specified in this method.

4.4 Blank contamination by pentachlorophenol has been reported (Reference 1) to be traceable to potassium carbonate; it has also been reported that this contamination may be removed by baking overnight at 400 to 500 °C.

4.5 Catechols are susceptible to degradation by active sites on injection port liners and columns, and are subject to oxidation to the corresponding chloro-o-benzoquinones (Reference 2). A small amount of ascorbic acid may be added to samples to prevent auto-oxidation (Reference 2; also see Section 11.1.6). For pulp and paper industry samples, ascorbic acid may be added to treated effluent samples only.

5.0 Safety

5.1 The toxicity or carcinogenicity of each compound or reagent used in this method has not been precisely determined; however, each chemical compound should be treated as a potential health hazard. Exposure to these compounds should be reduced to the lowest possible level. The laboratory is responsible for maintaining a current awareness file of OSHA regulations regarding the safe handling of the chemicals specified in this method. A reference file of materials safety data sheets (MSDSs) should be made available to all personnel involved in these analyses. Additional information on laboratory safety can be found in References 4 through 6.

5.2 Samples may contain high concentrations of toxic compounds, and should be handled with gloves and a hood opened to prevent exposure.

6.0 Equipment and Supplies

NOTE: Brand names, suppliers, and part numbers are for illustrative purposes only. No endorsement is implied. Equivalent performance may be achieved using apparatus and materials other than those specified here, but demonstration of equivalent performance that meets the requirements of this method is the responsibility of the laboratory.

6.1 Sampling equipment for discrete or composite sampling.

6.1.1 Sample bottles and caps.

6.1.1.1 Sample bottle: Amber glass, 1000-mL minimum, with screw-cap. If amber bottles are not available, samples shall be protected from light.

6.1.1.2 Bottle caps: Threaded to fit sample bottles. Caps shall be lined with PTFE.

6.1.1.3 Cleaning bottles: Detergent water wash, cap with aluminum foil, and bake at 450 °C for a minimum of one hour before use.

6.1.1.4 Cleaning liners: Detergent water wash, reagent water (Section 7.4) and solvent rinse, and bake at approximately 200 °C for a minimum of 1 hour prior to use.

6.1.1.5 Bottles and liners must be lot-certified to be free of chlorophenolics by running blanks according to this method. If blanks from bottles and/or liners without cleaning or with fewer cleaning steps show no detectable chlorophenolics, the bottle and liner cleaning steps that do not eliminate chlorophenolics may be omitted.

6.1.2 Compositing equipment: Automatic or manual compositing system incorporating glass containers cleaned per bottle cleaning procedure above. Sample containers are kept at 0 to 4 °C during sampling. Glass or PTFE tubing only shall be used. If the sampler uses a peristaltic pump, a minimum length of compressible silicone rubber tubing may be used in the pump only. Before use, the tubing shall be thoroughly rinsed with methanol, followed by repeated rinsing with reagent water (Section 7.4) to minimize sample contamination. An integrating flow meter is used to collect proportional composite samples.

6.2 Extraction apparatus.

6.2.1 Bottle or beaker: 1500-to 2000-mL capacity.

6.2.2 Separatory funnel: 500-to 2000-mL, glass, with PTFE stopcock.

6.2.3 Magnetic stirrer: Corning Model 320, or equivalent, with stirring bar.

6.3 Polyethylene gloves: For handling samples and extraction equipment (Fisher 11–394–110–B, or equivalent).

6.4 Graduated cylinders: 1000-mL, 100-mL, and 10-mL nominal.

6.5 Centrifuge: Capable of accepting 50-mL centrifuge tubes and achieving 3000 RPM.

6.5.1 Centrifuge tubes.

6.5.1.1 35-mL nominal, with PTFE-lined screw-cap.

6.5.1.2 15-mL nominal, conical graduated, with ground-glass stopper.

6.6 Concentration apparatus.

6.6.1 Kuderna-Danish (K–D) concentrator tube: 10-mL, graduated (Kontes K–570050–1025, or equivalent) with calibration verified. Ground-glass stopper (size 19/22 joint) is used to prevent evaporation of extracts.

6.6.2 Kuderna-Danish (K–D) evaporation flask: 1000-mL (Kontes K–570001–1000, or equivalent), attached to concentrator tube with springs (Kontes K–662750–0012).

6.6.3 Snyder column: Three-ball macro (Kontes K–503000–0232, or equivalent).

6.6.4 Snyder column: Two-ball micro (Kontes K–469002–0219, or equivalent).

6.6.5 Boiling chips: Approximately 10/40 mesh, extracted with methylene chloride and baked at 450 °C for a minimum of one hour.

6.6.6 Nitrogen evaporation apparatus: Equipped with a water bath controlled at 35 to 40 °C (N-Evap, Organomation Associates, Inc., South Berlin, MA, or equivalent), installed in a fume hood. This device may be used in place of the micro-Snyder column concentrator in Section 6.6.4 above.

6.7 Water bath: Heated, with concentric ring cover, capable of temperature control (± 2 °C), installed in a fume hood.

6.8 Sample vials: Amber glass, 1- to 3-mL, with PTFE-lined screw-cap.

6.9 Balances.

6.9.1 Analytical: Capable of weighing 0.1 mg.

6.9.2 Top loading: Capable of weighing 10 mg.

6.10 pH meter.

6.11 Gas chromatograph: Shall have splitless or on-column injection port for capillary column, temperature program with 50 °C hold, and shall meet all of the performance specifications in Section 9.

6.12 Gas chromatographic column: 30 m (±5 m) × 0.25 mm (±0.02 mm) I.D. × 0.25 micron, 5% phenyl, 94% methyl, 1% vinyl silicone bonded-phase fused-silica capillary column (J & W DB–5, or equivalent).

6.13 Mass spectrometer: 70 eV electron impact ionization, shall repetitively scan from 42 to 450 amu in 0.95 to 1.00 second, and shall produce a unit resolution (valleys between m/z 441–442 less than 10% of the height of the 441 peak), background-corrected mass spectrum from 50 ng decafluorotriphenylphosphine (DFTPP) introduced through the GC inlet. The spectrum shall meet the mass-intensity criteria in Table 3 (Reference 7). The mass spectrometer shall be interfaced to the GC such that the end of the capillary column terminates within 1 cm of the ion source, but does not intercept the electron or ion beams. All portions of the column which connect the GC to the ion source shall remain at or above the column temperature during analysis to preclude condensation of less volatile compounds.

6.14 Data system: Shall collect and record MS data, store mass-intensity data in spectral libraries, process GCMS data, generate reports, and compute and record response factors.

6.14.1 Data acquisition: Mass spectra shall be collected continuously throughout the analysis and stored on a mass storage device.

6.14.2 Mass spectral libraries: User-created libraries containing mass spectra obtained from analysis of authentic standards shall be employed to reverse search GCMS runs for the compounds of interest (Section 10.2).

6.14.3 Data processing: The data system shall be used to search, locate, identify, and quantify the compounds of interest in each GCMS analysis. Software routines shall be employed to compute retention times, and to compute peak areas at the m/z's specified (Table 4). Displays of spectra, mass chromatograms, and library comparisons are required to verify results.

6.14.4 Response factors and multi-point calibrations: The data system shall be used to record and maintain lists of response factors (response ratios for isotope dilution) and multi-point calibration curves (Section 10). Computations of relative standard deviation (coefficient of variation) are used for testing calibration linearity. Statistics on initial (Section 9.3.2) and ongoing (Section 9.6) performance shall be computed and maintained.

7.0 Reagents and Standards

7.1 Reagents for adjusting sample pH.

7.1.1 Sodium hydroxide: Reagent grade, 6 N in reagent water.

7.1.2 Sulfuric acid: Reagent grade, 6 N in reagent water.

7.2 Reagents for sample preservation.

7.2.1 Sodium thiosulfate ($Na_2S_2O_3$) solution (1 N): Weigh 79 g $Na_2S_2O_3$ in a 1–L volumetric flask and dilute to the mark with reagent water.

7.2.2 Ascorbic acid solution: Prepare a solution of ascorbic acid in reagent water at a concentration of 0.1 g/mL. This solution must be prepared fresh on each day when derivatizations will be performed. Therefore, do not prepare more than will be used that day. (A 50-mL volume is sufficient for ten analyses).

7.3 Solvents: Hexane, acetone, and methanol. Distilled in glass (Burdick and Jackson, or equivalent).

7.4 Reagent water: Water in which the compounds of interest and interfering compounds are not detected by this method.

7.5 Reagents for derivatization.

7.5.1 Potassium carbonate (K_2CO_3).

7.5.1.1 Purification: Spread in a shallow baking dish, heat overnight at 400 to 500 °C.

7.5.1.2 Solution: Dissolve 150 g purified K_2CO_3 in 250 mL reagent water.

7.5.2 Acetic anhydride: Redistilled reagent grade.

7.6 Analytical standards.

7.6.1 Derivatization: Because the chlorinated phenolics are determined as their acetate derivatives after in situ acetylation, the method requires that the calibration standards be prepared by spiking the underivatized materials into reagent water and carrying the spiked reagent water aliquot through the entire derivatization and extraction procedure that is applied to the field samples.

7.6.2 Standard solutions: Purchased as solutions or mixtures with certification to their purity, concentration, and authenticity, or prepared from materials of known purity and composition. If chemical purity of a compound is 98% or greater, the weight may be used without correction to compute the concentration of the standard. When not being used, standards are stored in the dark at −20 to −10 °C in screw-capped vials with PTFE-lined lids. A mark is placed on the vial at the level of the solution so that solvent evaporation loss can be detected. The vials are brought to room temperature prior to use.

7.6.3 If the chemical purity of any standard does not meet the 98% requirement above, the laboratory must correct all calculations, calibrations, etc., for the difference in purity.

7.7 Preparation of stock solutions: Prepare chlorovanillins and chlorosyringaldehydes in acetone, as these compounds are subject to degradation in methanol. Prepare the remaining chlorophenolics in methanol. Prepare all standards per the steps below. Observe the safety precautions in Section 5.

7.7.1 Dissolve an appropriate amount of assayed reference material in a suitable solvent. For example, weigh 50 mg (±0.1 mg) of pentachlorophenol in a 10-mL ground-glass-

stoppered volumetric flask and fill to the mark with methanol. After the pentachlorophenol is completely dissolved, transfer the solution to a 15-mL vial with PTFE-lined cap.

7.7.2 Stock solutions should be checked for signs of degradation prior to the preparation of calibration or performance test standards and shall be replaced after six months, or sooner if comparison with quality control check standards indicates a change in concentration.

7.8 Labeled compound spiking solution: From stock solutions prepared as above, or from mixtures, prepare one spiking solution to contain the labeled chlorovanillin in acetone and a second spiking solution to contain the remaining chlorophenolics, including the 3,4,5-trichlorophenol sample matrix internal standard (SMIS), in methanol. The labeled compounds and SMIS are each at a concentration of 12.5 µg/mL.

7.9 Secondary standards for calibration: Using stock solutions (Section 7.7), prepare one secondary standard containing the chlorovanillins and chlorsyringaldehydes listed in Table 1 in acetone and a second secondary standard containing the remaining chlorophenolics in methanol. The monochlorinated phenol, guaiacol, and catechol are included at a concentration of 25 µg/mL; the trichlorinated catechols, tetrachlorinated guaiacol and catechol, pentachlorophenol, 5,6-dichlorovanillin, and 2,6-dichlorosyringaldehyde are included at a concentration of 100 µg/mL; and the remaining compounds are included at a concentration of 50 µg/mL, each in their respective solutions.

7.10 Instrument internal standard (IIS): Prepare a solution of 2,2′-difluorobiphenyl (DFB) at a concentration of 2.5 mg/mL in hexane.

7.11 DFTPP solution: Prepare a solution of DFTPP at 50 µg/mL in acetone.

7.12 Solutions for obtaining authentic mass spectra (Section 10.2): Prepare mixtures of compounds at concentrations which will assure authentic spectra are obtained for storage in libraries.

7.13 Preparation of calibration solutions.

7.13.1 Into five 1000-mL aliquots of reagent water, spike 50, 100, 200, 500 and 1000 µL of each of the two solutions in Section 7.9. Spike 1.00 mL of each of the two labeled compound spiking solutions (Section 7.8) into each of the five aliquots.

7.13.2 Using the procedure in Section 11, derivatize and extract each solution, and concentrate the extract to a final volume of 0.50 mL. This will produce calibration solutions of nominal 5, 10, 20, 50, and 100 µg/mL of the native chlorophenolics and a constant concentration of 25 µg/mL of each labeled compound and the SMIS (assuming 100% derivatization and recovery). As noted in Section 11.1.6, ascorbic acid is added to all samples of final effluents to stabilize chlorocatechols, but is not added to samples of pulp and paper in-process wastewaters. Therefore, it is necessary to prepare separate sets of five initial calibration standards with and without the addition of ascorbic acid. Also, in the event that the laboratory is extracting final effluent samples by both the stir-bar and separatory funnel procedures (see Section 11.3), initial calibration standards should be prepared by both methods.

7.13.3 These solutions permit the relative response (labeled to unlabeled) and the response factor to be measured as a function of concentration (Sections 10.4 and 10.5).

7.13.4 The nominal 50 µg/mL standard may also be used as a calibration verification standard (see Section 9.6).

7.14 Ongoing precision and recovery (OPR) standard: Used for determination of initial (Section 9.3.2) and ongoing (Section 9.6) precision and recovery. This solution is prepared by spiking 500 µL of each the two solutions of the secondary calibration standards (Section 7.9) and 1 mL of each of the two labeled compound spiking solutions (Section 7.8) into 1000 mL of reagent water.

7.15 Stability of solutions: All standard solutions (Sections 7.7 through 7.14) shall be analyzed within 48 hours of preparation and on a monthly basis thereafter for signs of degradation. Standards will remain acceptable if the peak area at the quantitation m/z relative to the DFB internal standard remains within ±15% of the area obtained in the initial analysis of the standard.

8.0 Sample Collection, Preservation, and Storage

8.1 Collect samples in glass containers (Section 6.1) following conventional sampling practices (Reference 9). Aqueous samples are collected in refrigerated bottles using automatic sampling equipment.

8.2 Sample preservation.

8.2.1 Residual chlorine: If the sample contains residual chlorine, the chlorine must be reduced to eliminate positive interference resulting from continued chlorination reactions. Immediately after sampling, test for residual chlorine using the following method or an alternative EPA method (Reference 10).

8.2.1.1 Dissolve a few crystals of potassium iodide in the sample and add three to five drops of a 1% starch solution. A blue color indicates the presence of residual chlorine.

8.2.1.2 If residual chlorine is found, add 1 mL of sodium thiosulfate solution (Section 7.2.1) for each 2.5 ppm of free chlorine or until the blue color disappears.

8.2.2 Acidification: Adjust pH of all aqueous samples to <2 with sulfuric acid (Section 7.1.2). Failure to acidify samples may result in positive interferences from continued chlorination reactions.

8.2.3 Refrigeration: Maintain sample temperature at 0 to 4 °C from time of collection until extraction, and maintain extracts at a temperature of 0 to 4 °C from time of extraction until analysis.

8.3 Collect a minimum of 2000 mL of sample. This will provide a sufficient amount for all testing. Smaller amounts may be collected if the stream is known to contain high levels of chlorophenolics.

8.4 All samples must be acetylated and extracted within 30 days of collection, and must be analyzed within 30 days of acetylation. If labeled compound recoveries for a sample do not meet the acceptance criteria in Table 5 and the 30-day holding time is not met, a new sample must be collected.

9.0 Quality Control

9.1 Each laboratory that uses this method is required to operate a formal quality assurance program (Reference 8). The minimum requirements of this program consist of an initial demonstration of laboratory capability, analysis of samples spiked with labeled compounds to evaluate and document data quality, and analysis of standards and blanks as tests of continued performance. Laboratory performance is compared to established performance criteria to determine if the results of analyses meet the performance characteristics of the method.

9.1.1 DFTPP spectrum validity shall be checked at the beginning of each eight-hour shift during which analyses are performed. This test is described in Section 9.2.

9.1.2 The laboratory shall make an initial demonstration of the ability to generate acceptable results with this method. This ability is established as described in Section 9.3.

9.1.3 The laboratory is permitted to modify this method to improve separations or lower the costs of measurements, provided all performance specifications are met. Each time a modification is made to the method, the laboratory is required to repeat the procedures in Sections 10.3 and 9.3.2 to demonstrate method performance. If the detection limits for the analytes in this method will be affected by the modification, the laboratory should demonstrate that each MDL (40 CFR 136, Appendix B) is less than or equal to the MDL in this method or one-third the regulatory compliance level, whichever is higher.

9.1.4 The laboratory shall spike all samples with labeled compounds and the sample matrix internal standard (SMIS) to monitor method performance. This test is described in Section 9.4. When results of these spikes indicate atypical method performance for samples, the samples are diluted to bring method performance within acceptable limits (Section 13).

9.1.5 Analyses of blanks are required to demonstrate freedom from contamination. The procedures and criteria for analysis of a blank are described in Section 9.5.

9.1.6 The laboratory shall, on an ongoing basis, demonstrate through analysis of the ongoing precision and recovery standard (Section 7.14) that the analysis system is in control. These procedures are described in Section 9.6.

9.1.7 The laboratory shall maintain records to define the quality of data that is generated. Development of accuracy statements is described in Section 9.4.4 and 9.6.3.

9.2 DFTPP spectrum validity: Inject 1 μL of the DFTPP solution (Section 7.11) either separately or within a few seconds of injection of the OPR standard (Section 9.6) analyzed at the beginning of each shift. The criteria in Table 3 shall be met.

9.3 Initial demonstration of laboratory capability.

9.3.1 Method Detection Limit (MDL): To establish the ability to detect the analytes in this method, the laboratory should determine the MDL per the procedure in 40 CFR 136, Appendix B using the apparatus, reagents, and standards that will be used in the practice of this method. MDLs less than or equal to the MDLs in Table 2 should be achieved prior to the practice of this method.

9.3.2 Initial precision and recovery (IPR): To establish the ability to demonstrate control over the analysis system and to generate acceptable precision and accuracy, the laboratory shall perform the following operations:

9.3.2.1 Derivatize, extract, concentrate, and analyze four 1000-mL aliquots of the ongoing precision and recovery standard (OPR; Section 7.14), according to the procedure in Section 11. Separate sets of IPR aliquots must be prepared with the addition of ascorbic acid and without.

9.3.2.2 Using results of the four analyses, compute the average percent recovery (X) and the relative standard deviation of the recovery (s) for each compound, by isotope dilution for pollutants with a labeled analog, and by internal standard for pollutants with no labeled analog and for the labeled compounds and the SMIS.

9.3.2.3 For each compound, compare s and X with the corresponding limits for initial precision and recovery in Table 5. If s and X for all compounds meet the acceptance criteria, system performance is acceptable and analysis of blanks and samples may begin. If, however, any individual s exceeds the precision limit or any individual X falls outside the range for recovery, system performance is unacceptable for that compound. In this event, correct the problem and repeat the test (Section 9.3.2).

9.4 Labeled compound recovery: The laboratory shall spike all samples with labeled compounds and the sample matrix internal

standard (SMIS) to assess method performance on the sample matrix.

9.4.1 Analyze each sample according to the method beginning in Section 11.

9.4.2 Compute the percent recovery (P) of the labeled compounds and the SMIS using the internal standard method (Section 14.3) with 2,2'-difluorobiphenyl as the reference compound.

9.4.3 Compare the labeled compound and SMIS recovery for each compound with the corresponding limits in Table 5. If the recovery of any compound falls outside its warning limit, method performance is unacceptable for that compound in that sample. Therefore, the sample is complex. The sample is diluted and reanalyzed per Section 13.

9.4.4 As part of the QA program for the laboratory, it is suggested, but not required, that method accuracy for samples be assessed and records maintained. After the analysis of five samples for which the labeled compounds pass the tests in Section 9.4.3, compute the average percent recovery (P) and the standard deviation of the percent recovery (sp) for the labeled compounds only. Express the accuracy assessment as a percent recovery interval from P−2sp to P = 2sp for each matrix. For example, if P = 90% and sp = 10%, the accuracy interval is expressed as 70 to 110%. Update the accuracy assessment for each compound on a regular basis (e.g., after each 20 to 30 new accuracy measurements).

9.5 Blanks: Reagent water blanks are analyzed to demonstrate freedom from contamination.

9.5.1 Extract and concentrate a 1000-mL reagent water blank with each sample batch (samples started through the extraction process on the same eight-hour shift, to a maximum of 20 samples). Blanks associated with samples to which ascorbic acid is added must be prepared with ascorbic acid, and blanks associated with samples to which ascorbic acid is not added must be prepared without ascorbic acid. Analyze the blank immediately after analysis of the OPR (Section 7.14) to demonstrate freedom from contamination.

9.5.2 If any of the compounds of interest (Table 1) or any potentially interfering compound is found in an aqueous blank at greater than 5μg/L (assuming a response factor of one relative to the sample matrix internal standard for compounds not listed in Table 1), analysis of samples is halted until the source of contamination is eliminated and a blank shows no evidence of contamination at this level.

9.6 Calibration verification and ongoing precision and recovery: At the beginning of each eight-hour shift during which analyses are performed, analytical system performance is verified for all compounds. Analysis of DFTPP (Section 9.2) and the nominal 50μg/mL OPR (Section 11.1.5) is used to verify all performance criteria. Adjustment and/or recalibration, per Section 10, shall be performed until all performance criteria are met. Only after all performance criteria are met may samples and blanks be analyzed.

9.6.1 Analyze the extract of the OPR (Section 11.1.5) at the beginning of each eight-hour shift and prior to analysis of samples from the same batch. Alternatively, a separate calibration verification may be performed using an aliquot of the midpoint calibration standard from Section 7.13 (with a nominal concentration of 50μ g/mL). This alternative may be used to check instrument performance on failure of an OPR, or when samples extracted with an OPR aliquot are not analyzed within the same eight-hour analysis shift.

9.6.1.1 Retention times: The absolute retention time of 2,2′-difluorobiphenyl shall be within the range of 765 to 885 seconds, and the relative retention times of all pollutants and labeled compounds shall fall within the limits given in Table 2.

9.6.1.2 GC resolution: The valley height between 4,6-dichloroguaiacol and 3,4-dichloroguaiacol at m/z 192 shall not exceed 10% of the height of the taller of the two peaks.

9.6.1.3 Multiple peaks: Each compound injected shall give a single, distinct GC peak.

9.6.2 Compute the percent recovery of each pollutant (Table 1) by isotope dilution (Section 10.4) for those compounds that have labeled analogs. Compute the percent recovery of each pollutant that has no labeled analog by the internal standard method (Section 10.5), using the 3,4,5-trichlorophenol (SMIS) as the internal standard. Compute the percent recovery of the labeled compounds and the SMIS by the internal standard method, using the 2,2′-difluorobiphenyl as the internal standard.

9.6.2.1 For each compound, compare the recovery with the limits for ongoing precision and recovery in Table 5. If all compounds meet the acceptance criteria, system performance is acceptable and analysis of blanks and samples may proceed. If, however, any individual recovery falls outside of the range given, system performance is unacceptable for that compound. In this event, there may be a problem with the GCMS or with the derivatization/extraction/concentration systems.

9.6.2.2 GCMS system: To determine if the failure of the OPR test (Section 9.6.2.1) is due to instrument drift, analyze the current calibration verification extract (Section 7.13.4), calculate the percent recoveries of all compounds, and compare with the OPR recovery limits in Table 5. If all compounds meet these criteria, GCMS performance/stability is verified, and the failure of the OPR analysis is attributed to problems in the derivatization/extraction/concentration of the OPR. In this case, analysis of the sample

extracts may proceed. However, failure of any of the recovery criteria in the analysis of a sample extract requires rederivatization of that sample (Sections 13.3.1 and 13.3.2). If, however, the performance/stability of the GCMS is not verified by analysis of the calibration verification extract, the GCMS requires recalibration and all extracts associated with the failed OPR must be reanalyzed.

9.6.3 Add results that pass the specifications in Section 9.6.2.1 to initial and previous ongoing data for each compound. Update QC charts to form a graphic representation of continued laboratory performance. Develop a statement of laboratory accuracy for each pollutant and labeled compound in each matrix type (reagent water, C-stage filtrate, E-stage filtrate, final effluent, etc.) by calculating the average percent recovery (R) and the standard deviation of percent recovery (sr). Express the accuracy as a recovery interval from R− 2sr to R = 2sr. For example, if R = 95% and sr = 5%, the accuracy is 85 to 105%.

9.7 The specifications contained in this method can be met if the apparatus used is calibrated properly, then maintained in a calibrated state. The standards used for calibration (Section 10) and for initial (Section 9.3.2) and ongoing (Section 9.6) precision and recovery should be identical, so that the most precise results will be obtained. The GCMS instrument in particular will provide the most reproducible results if dedicated to the settings and conditions required for the analyses of chlorophenolics by this method.

9.8 Depending on specific program requirements, field replicates may be collected to determine the precision of the sampling technique, and spiked samples may be required to determine the accuracy of the analysis when the internal standard method is used.

10.0 Calibration and Standardization

10.1 Assemble the GCMS and establish the operating conditions in Section 12. Analyze standards per the procedure in Section 12 to demonstrate that the analytical system meets the minimum levels in Table 2, and the mass-intensity criteria in Table 3 for 50 ng DFTPP.

10.2 Mass-spectral libraries: Detection and identification of compounds of interest are dependent upon spectra stored in user-created libraries.

10.2.1 Obtain a mass spectrum of the acetyl derivative of each chlorophenolic compound (pollutant, labeled compound, and the sample matrix internal standard) by derivatizing and analyzing an authentic standard either singly or as part of a mixture in which there is no interference between closely eluting components. That only a single compound is present is determined by examination of the spectrum. Fragments not attributable to the compound under study indicate the presence of an interfering compound.

10.2.2 Adjust the analytical conditions and scan rate (for this test only) to produce an undistorted spectrum at the GC peak maximum. An undistorted spectrum will usually be obtained if five complete spectra are collected across the upper half of the GC peak. Software algorithms designed to ''enhance'' the spectrum may eliminate distortion, but may also eliminate authentic m/z's or introduce other distortion.

10.2.3 The authentic reference spectrum is obtained under DFTPP tuning conditions (Section 10.1 and Table 3) to normalize it to spectra from other instruments.

10.2.4 The spectrum is edited by removing all peaks in the m/z 42 to 45 range, and saving the five most intense mass spectral peaks and all other mass spectral peaks greater than 10% of the base peak (excluding the peaks in the m/z 42 to 45 range). The spectrum may be further edited to remove common interfering m/z's. The spectrum obtained is stored for reverse search and for compound confirmation. 10.3 Minimum level: Demonstrate that the chlorophenolics are detectable at the minimum level (per all criteria in Section 14). The nominal 5 µg/mL calibration standard (Section 7.13) can be used to demonstrate this performance.

10.4 Calibration with isotope dilution: Isotope dilution is used when (1) labeled compounds are available, (2) interferences do not preclude its use, and (3) the quantitation m/z (Table 4) extracted ion-current profile (EICP) area for the compound is in the calibration range. Alternative labeled compounds and quantitation m/z's may be used based on availability. If any of the above conditions preclude isotope dilution, the internal standard calibration method (Section 10.5) is used.

10.4.1 A calibration curve encompassing the concentration range is prepared for each compound to be determined. The relative response (pollutant to labeled) vs. concentration in standard solutions is plotted or computed using a linear regression. The example in Figure 1 shows a calibration curve for phenol using phenol-d5 as the isotopic diluent. Also shown are the ±10% error limits (dotted lines). Relative response (RR) is determined according to the procedures described below. A minimum of five data points are employed for calibration.

10.4.2 The relative response of a pollutant to its labeled analog is determined from isotope ratio values computed from acquired data. Three isotope ratios are used in this process:

R_x = the isotope ratio measured for the pure pollutant.

R_y = the isotope ratio measured for the labeled compound.

R_m = the isotope ratio of an analytical mixture of pollutant and labeled compounds.

The m/z's are selected such that $R_x > R_y$. If R_m is not between $2R_y$ and $0.5R_x$, the method does not apply and the sample is analyzed by the internal standard method.

10.4.3 Capillary columns sometimes separate the pollutant-labeled pair when deuterium labeled compounds are used, with the labeled compound eluted first (Figure 2). For this case,

$$R_x = \left[\frac{\text{area } m_1/z}{1}\right], \text{ at the retention time of the pollutant } (RT_2).$$

$$R_y = \left[\frac{1}{\text{area } m_2/z}\right], \text{ at the retention time of the labeled compound } (RT_1).$$

$$R_m = \left[\frac{\text{area at } m_1/z\ (\text{at } RT_2)}{\text{area at } m_2/z\ (\text{at } RT_1)}\right], \text{ as measured in the mixture of the pollutant and labeled compounds (Figure 2), and } RR = R_m.$$

10.4.4 When the pollutant-labeled pair is not separated (as occurs with carbon-13-labeled compounds), or when another labeled compound with interfering spectral masses overlaps the pollutant (a case which can occur with isomeric compounds), it is necessary to determine the contributions of the pollutant and labeled compound to the respective EICP areas. If the peaks are separated well enough to permit the data system or operator to remove the contributions of the compounds to each other, the equations in Section 10.4.3 apply. This usually occurs when the height of the valley between the two GC peaks at the same m/z is less than 70 to 90% of the height of the shorter of the two peaks. If significant GC and spectral overlap occur, RR is computed using the following equation:

$$RR = \frac{(R_y - R_m)(R_x + 1)}{(R_m - R_x)(R_y + 1)}$$

Where:

R_x is measured as shown in figure 3A,
R_y is measured as shown in figure 3B,
R_m is measured as shown in figure 3C.

For example, R_x = 46100/4780 = 9.644; R_y = 2650/43600 = 0.0608; R_m = 49200/48300 = 1.1019; thus, RR = 1.114. 10.4.5 To calibrate the analytical system by isotope dilution, analyze a 1-µL aliquot of each of the calibration standards (Section 7.13) using the procedure in Section 12. Compute the RR at each concentration.

10.4.6 Linearity: If the ratio of relative response to concentration for any compound is constant (less than 20% coefficient of variation) over the five-point calibration range, an averaged relative response/concentration ratio may be used for that compound; otherwise, the complete calibration curve for that compound shall be used over the five-point calibration range.

10.5 Calibration by internal standard: The method contains two types of internal standards, the sample matrix internal standard (SMIS) and the instrument internal standard (IIS), and they are used for different quantitative purposes. The 3,4,5-trichlorophenol sample matrix internal standard (SMIS) is used for measurement of all pollutants with no labeled analog and when the criteria for isotope dilution (Section 10.4) cannot be met. The 2,2′-difluorobiphenyl instrument internal standard (IIS) is used for determination of the labeled compounds and the SMIS. The results are used for intralaboratory statistics (Sections 9.4.4 and 9.6.3).

10.5.1 Response factors: Calibration requires the determination of response factors (RF) for both the pollutants with no labeled analog and for the labeled compounds and the SMIS. The response factor is defined by the following equation:

$$RF = \frac{(A_s \times C_{is})}{(A_{is} \times C_s)}$$

Where:

A_s=the area of the characteristic mass for the compound in the daily standard.
A_{is}=the area of the characteristic mass for the internal standard.
C_{is}=the concentration of the internal standard (µg/mL).
C_s=is the concentration of the compound in the calibration standard (µg/mL).

When this equation is used to determine the response factors for pollutant compounds without labeled analogs, use the area (A_{is}) and concentration (C_{is}) of 3,4,5-trichlorophenol (SMIS) as the internal standard. When this equation is used to determine the response factors for the labeled

analogs and the SMIS, use the area (A_{is}) and concentration (C_{is}) of 2,2′-difluorobiphenyl as the internal standard.

10.5.2 The response factor is determined for at least five concentrations appropriate to the response of each compound (Section 7.13); nominally, 5, 10, 20, 50, and 100 µg/mL. The amount of SMIS added to each solution is the same (25 µg/mL) so that C_{is} remains constant. Likewise, the concentration of IIS is constant in each solution. The area ratio (A_s/A_{is}) is plotted versus the concentration ratio (C_s/C_{is}) for each compound in the standard to produce a calibration curve.

10.5.3 Linearity: If the response factor (RF) for any compound is constant (less than 35% coefficient of variation) over the five-point calibration range, an averaged response factor may be used for that compound; otherwise, the complete calibration curve for that compound shall be used over the five-point range.

10.6 Combined calibration: By using calibration solutions (Section 7.13) containing the pollutants, labeled compounds, and the internal standards, a single set of analyses can be used to produce calibration curves for the isotope dilution and internal standard methods. These curves are verified each shift (Section 9) by analyzing the OPR standard, or an optional calibration verification (VER) standard. Recalibration is required only if OPR criteria (Section 9.6 and Table 5) cannot be met.

11.0 Sample Derivatization, Extraction, and Concentration

The procedure described in this section uses a stir-bar in a beaker for the derivatization. The extraction procedures applied to samples depend on the type of sample being analyzed. Extraction of samples from in-process wastewaters is performed using a separatory funnel procedure. All calibrations, IPR, OPR, and blank analyses associated with in-process wastewater samples must be performed by the separatory funnel procedure.

Extraction of samples of final effluents and raw water may be performed using either the stir-bar procedure or the separatory funnel procedure. However, all calibrations, IPR, OPR, blank, and sample analyses must be performed using the same procedure. Both procedures are described below.

11.1 Preparation of all sample types for stir-bar derivatization.

11.1.1 Allow sample to warm to room temperature.

11.1.2 Immediately prior to measuring, shake sample vigorously to insure homogeneity.

11.1.3 Measure 1000 mL (±10 mL) of sample into a clean 2000-mL beaker. Label the beaker with the sample number.

11.1.4 Dilute aliquot(s).

11.1.4.1 Complex samples: For samples that are expected to be difficult to derivatize, concentrate, or are expected to overload the GC column or mass spectrometer, measure an additional 100 mL (±1 mL) into a clean 2000-mL beaker and dilute to a final volume of 1000-mL (±50 mL) with reagent water. Label with the sample number and as the dilute aliquot. However, to ensure adequate sensitivity, a 1000-mL aliquot must always be prepared and analyzed.

11.1.4.2 Pulp and paper industry samples: For in-process streams such as E-stage and C-stage filtrates and other in-process wastewaters, it may be necessary to prepare an aliquot at an additional level of dilution. In this case, dilute 10 mL (±0.1 mL) of sample to 1000-mL (±50 mL).

11.1.5 QC aliquots: For a batch of samples of the same type to be extracted at the same time (to a maximum of 20), place two 1000-mL (±10 mL) aliquots of reagent water in clean 2000-mL beakers. Label one beaker as the blank and the other as the ongoing precision and recovery (OPR) aliquot. Because final effluent samples are treated with ascorbic acid and in-process wastewater samples are not (see Section 11.1.6), prepare an OPR aliquot and a blank for the final effluent and a separate pair for the in-process samples. Treat these QC aliquots in the same fashion as the associated samples, adding ascorbic acid to the pair associated with the final effluents, and not adding ascorbic acid to the pair associated with the in-process samples.

11.1.6 Ascorbic acid: Added to stabilize chlorocatechols. However, for pulp and paper industry in-process streams and other in-process wastewaters, the addition of ascorbic acid may convert chloro-o-quinones to catechols if these quinones are present. Separate calibration curves must be prepared with and without the addition of ascorbic acid (Section 7.13.2).

11.1.6.1 Spike 5 to 6 mL of the ascorbic acid solution (Section 7.2.2) into each final effluent sample, and the associated calibration standards, IPR and OPR aliquots, and blank.

11.1.6.2 For pulp and paper industry C-stage filtrates, E-stage filtrates, and untreated effluents, omit the ascorbic acid to prevent the conversion of chloro-o-quinones to catechols. Prepare calibration standards, IPR and OPR aliquots, and blanks associated with these samples without ascorbic acid as well.

11.1.7 Spike 1000 µL of the labeled compound spiking solution (Section 7.8) into the sample and QC aliquots.

11.1.8 Spike 500 µL of the nominal 50 µg/mL calibration solution (Section 7.13.4) into the OPR aliquot.

11.1.9 Adjust the pH of the sample aliquots to between 7.0 and 7.1. For calibration standards, IPR and OPR aliquots, and blanks, pH adjustment is not required.

11.1.10 Equilibrate all sample and QC solutions for approximately 15 minutes, with occasional stirring.

11.2 Derivatization: Because derivatization must proceed rapidly, particularly upon the addition of the K_2CO_3 buffer, it is necessary to work with one sample at a time until the derivatization step (Section 11.2.3) is complete.

11.2.1 Place a beaker containing a sample or QC aliquot on the magnetic stirrer in a fume hood, drop a clean stirring bar into the beaker, and increase the speed of the stirring bar until the vortex is drawn to the bottom of the beaker.

11.2.2 Measure 25 to 26 mL of K_2CO_3 buffer into a graduated cylinder or other container and 25 to 26 mL of acetic acid into another.

11.2.3 Add the K_2CO_3 buffer to the sample or QC aliquot, immediately (within one to three seconds) add the acetic anhydride, and stir for three to five minutes to complete the derivatization.

11.3 Extraction: Two procedures are described below for the extraction of derivatized samples. The choice of extraction procedure will depend on the sample type. For final effluent samples, either of two procedures may be utilized for extraction of derivatized samples. For samples of in-process wastewaters, the separatory funnel extraction procedure must be used.

NOTE: Whichever procedure is employed, the same extraction procedure must be used for calibration standards, IPR aliquots, OPR aliquots, blanks, and the associated field samples.

11.3.1 Stir-bar extraction of final effluents.

11.3.1.1 Add 200 mL (±20 mL) of hexane to the beaker and stir for three to five minutes, drawing the vortex to the bottom of the beaker.

11.3.1.2 Stop the stirring and drain the hexane and a portion of the water into a 500- to 1000-mL separatory funnel. Allow the layers to separate.

11.3.1.3 Drain the aqueous layer back into the beaker.

11.3.1.4 The formation of emulsions can be expected in any solvent extraction procedure. If an emulsion forms, the laboratory must take steps to break the emulsion before proceeding. Mechanical means of breaking the emulsion include the use of a glass stirring rod, filtration through glass wool, and other techniques. For emulsions that resist these techniques, centrifugation is nearly 100% effective.

If centrifugation is employed to break the emulsion, drain the organic layer into a centrifuge tube, cap the tube, and centrifuge for two to three minutes or until the phases separate. If the emulsion cannot be completely broken, collect as much of the organic phase as possible, and measure and record the volume of the organic phase collected.

If all efforts to break the emulsion fail, including centrifugation, and none of the organic phase can be collected, proceed with the dilute aliquot (Section 11.1.4.2). However, use of the dilute aliquot will sacrifice the sensitivity of the method, and may not be appropriate in all cases.

11.3.1.5 Drain the organic layer into a Kuderna-Danish (K–D) apparatus equipped with a 10-mL concentrator tube. Label the K–D apparatus. It may be necessary to pour the organic layer through a funnel containing anhydrous sodium sulfate to remove any traces of water from the extract.

11.3.1.6 Repeat the extraction (Section 11.3.1.1 through 11.3.1.5) two more times using another 200-mL of hexane for each extraction, combining the extracts in the K–D apparatus.

11.3.1.7 Proceed with concentration of the extract, as described in Section 11.4.

11.3.2 Separatory funnel extraction of either final effluents or in-process wastewaters.

11.3.2.1 Transfer the derivatized sample or QC aliquot to a 2-L separatory funnel.

11.3.2.2 Add 200 mL (±20 mL) of hexane to the separatory funnel. Cap the funnel and extract the sample by shaking the funnel for two to three minutes with periodic venting.

11.3.2.3 Allow the organic layer to separate from the water phase for a minimum of 10 minutes.

11.3.2.4 Drain the lower aqueous layer into the beaker used for derivatization (Section 11.2), or into a second clean 2-L separatory funnel. Transfer the solvent to a 1000-mL K–D flask. It may be necessary to pour the organic layer through a funnel containing anhydrous sodium sulfate to remove any traces of water from the extract.

11.3.2.5 The formation of emulsions can be expected in any solvent extraction procedure. If an emulsion forms, the laboratory must take steps to break the emulsion before proceeding. Mechanical means of breaking the emulsion include the use of a glass stirring rod, filtration through glass wool, and other techniques. For emulsions that resist these techniques, centrifugation may be required.

If centrifugation is employed to break the emulsion, drain the organic layer into a centrifuge tube, cap the tube, and centrifuge for two to three minutes or until the phases separate. If the emulsion cannot be completely broken, collect as much of the organic phase as possible, and measure and record the volume of the organic phase collected. If all efforts to break the emulsion, including centrifugation, fail and none of the organic phase can be collected, proceed with the dilute aliquot (Section 11.1.4.2). However, use

of the dilute aliquot will sacrifice the sensitivity of the method, and may not be appropriate in all cases.

11.3.2.6 If drained into a beaker, transfer the aqueous layer to the 2-L separatory funnel (Section 11.3.2.1). Perform a second extraction using another 200 mL of fresh solvent.

11.3.2.7 Transfer the extract to the 1000-mL K–D flask in Section 11.3.2.4.

11.3.2.8 Perform a third extraction in the same fashion as above.

11.3.2.9 Proceed with concentration of the extract, as described in Section 11.4.

11.4 Macro concentration: Concentrate the extracts in separate 1000-mL K–D flasks equipped with 10-mL concentrator tubes. Add one to two clean boiling chips to the flask and attach a three-ball macro-Snyder column. Prewet the column by adding approximately 1 mL of hexane through the top. Place the K–D apparatus in a hot water bath so that the entire lower rounded surface of the flask is bathed with steam. Adjust the vertical position of the apparatus and the water temperature as required to complete the concentration in 15 to 20 minutes. At the proper rate of distillation, the balls of the column will actively chatter but the chambers will not flood. When the liquid has reached an apparent volume of 1 mL, remove the K–D apparatus from the bath and allow the solvent to drain and cool for at least 10 minutes. Remove the Snyder column and rinse the flask and its lower joint into the concentrator tube with 1 to 2 mL of hexane. A 5-mL syringe is recommended for this operation.

11.5 Micro-concentration: Final concentration of the extracts may be accomplished using either a micro-Snyder column or nitrogen evaporation.

11.5.1 Micro-Snyder column: Add a clean boiling chip and attach a two-ball micro-Snyder column to the concentrator tube. Prewet the column by adding approximately 0.5 mL hexane through the top. Place the apparatus in the hot water bath. Adjust the vertical position and the water temperature as required to complete the concentration in 5 to 10 minutes. At the proper rate of distillation, the balls of the column will actively chatter but the chambers will not flood. When the liquid reaches an apparent volume of approximately 0.2 mL, remove the apparatus from the water bath and allow to drain and cool for at least 10 minutes. Remove the micro-Snyder column and rinse its lower joint into the concentrator tube with approximately 0.2 mL of hexane. Adjust to a final volume of 0.5 mL.

11.5.2 Nitrogen evaporation: Transfer the concentrator tube to a nitrogen evaporation device and direct a gentle stream of clean dry nitrogen into the concentrator. Rinse the sides of the concentrator tube with small volumes of hexane, and concentrate the extract to a final volume of 0.5 mL.

11.6 Spike each extract with 10 µL of the 2,2′-difluorobiphenyl IIS (Section 7.10) and transfer the concentrated extract to a clean screw-cap vial using hexane to rinse the concentrator tube. Seal the vial with a PTFE-lined lid, and mark the level on the vial. Label with the sample number and store in the dark at −20 to −10 °C until ready for analysis.

12.0 GCMS Analysis

12.1 Establish the following operating conditions:

Carrier gas flow: Helium at 30 cm/sec at 50 °C
Injector temperature: 300 °C
Initial temperature: 50 °C
Temperature program: 8 °C/min to 270 °C
Final hold: Until after 2,6-dichlorosyringaldehyde elutes

Adjust the GC conditions to meet the requirements in Section 9.6.1.1 and Table 2 for analyte separation and sensitivity. Once optimized, the same GC conditions must be used for the analysis of all standards, blanks, IPR and OPR aliquots, and samples.

12.2 Bring the concentrated extract (Section 11.6) or standard (Sections 7.13 and 7.14) to room temperature and verify that any precipitate has redissolved. Verify the level on the extract (Sections 7.13, 7.14, and 11.6) and bring to the mark with solvent if required.

12.3 Inject a 1-µL volume of the standard solution or extract using on-column or splitless injection. For 0.5 mL extracts, this 1-µL injection volume will contain 50 ng of the DFB internal standard. If an injection volume other than 1 µL is used, that volume must contain 50 ng of DFB.

12.4 Start the GC column temperature ramp upon injection. Start MS data collection after the solvent peak elutes. Stop data collection after the 2,6-dichlorosyringaldehyde peak elutes. Return the column to the initial temperature for analysis of the next sample.

13.0 Analysis of Complex Samples

Some samples may contain high levels (>1000 µg/L) of the compounds of interest, interfering compounds, and/or other phenolic materials. Some samples will not concentrate to 0.5 mL (Section 11.5); others will overload the GC column and/or mass spectrometer; others may contain amounts of phenols that may exceed the capacity of the derivatizing agent.

13.1 Analyze the dilute aliquot (Section 11.1.4) when the sample will not concentrate to 0.5 mL. If a dilute aliquot was not extracted, and the sample holding time (Section 8.4) has not been exceeded, dilute an aliquot of sample with reagent water, and derivatize and extract it (Section 11.1.4).

Otherwise, dilute the extract (Section 14.7.3) and quantitate it by the internal standard method (Section 14.3).

13.2 Recovery of the 2,2′-difluorobiphenyl instrument internal standard: The EICP area of the internal standard should be within a factor of two of the area in the OPR or VER standard (Section 9.6). If the absolute areas of the labeled compounds and the SMIS are within a factor of two of the respective areas in the OPR or VER standard, and the DFB internal standard area is less than one-half of its respective area, then internal standard loss in the extract has occurred. In this case, analyze the extract from the dilute aliquot (Section 11.1.4).

13.3 Recovery of labeled compounds and the sample matrix internal standard (SMIS): SMIS and labeled compound recovery specifications have been developed for samples with and without the addition of ascorbic acid. Compare the recoveries to the appropriate limits in Table 5.

13.3.1 If SMIS or labeled compound recoveries are outside the limits given in Table 5 and the associated OPR analysis meets the recovery criteria, the extract from the dilute aliquot (Section 11.1.4) is analyzed as in Section 14.7.

13.3.2 If labeled compound or SMIS recovery is outside the limits given in Table 5 and the associated OPR analysis did not meet recovery criteria, a problem in the derivatization/extraction/concentration of the sample is indicated, and the sample must be rederivatized and reanalyzed.

14.0 Data Analysis and Calculations

14.1 Qualitative determination: Identification is accomplished by comparison of data from analysis of a sample or blank with data stored in the mass spectral libraries. Identification of a compound is confirmed when the following criteria are met:

14.1.1 The signals for m/z 43 (to indicate the presence of the acetyl derivative) and all characteristic m/z's stored in the spectral library (Section 10.2.4) shall be present and shall maximize within the same two consecutive scans.

14.1.2 Either (1) the background corrected EICP areas, or (2) the corrected relative intensities of the mass spectral peaks at the GC peak maximum shall agree within a factor of two (0.5 to 2 times) for all m/z's stored in the library.

14.1.3 The relative retention time shall be within the window specified in Table 2.

14.1.4 The m/z's present in the mass spectrum from the component in the sample that are not present in the reference mass spectrum shall be accounted for by contaminant or background ions. If the mass spectrum is contaminated, an experienced spectrometrist (Section 1.4) shall determine the presence or absence of the compound.

14.2 Quantitative determination by isotope dilution: By adding a known amount of a labeled compound to every sample prior to derivatization and extraction, correction for recovery of the pollutant can be made because the pollutant and its labeled analog exhibit the same effects upon derivatization, extraction, concentration, and gas chromatography. Relative response (RR) values for sample mixtures are used in conjunction with calibration curves described in Section 10.4 to determine concentrations directly, so long as labeled compound spiking levels are constant. For the phenol example given in Figure 1 (Section 10.4.1), RR would be equal to 1.114. For this RR value, the phenol calibration curve given in Figure 1 indicates a concentration of 27 µg/mL in the sample extract (C_{ex}).

14.2.1 Compute the concentration in the extract using the response ratio determined from calibration data (Section 10.4) and the following equation:

$$C_{ex}(\mu g/mL) = \left(A_n \times C_l\right) / \left(A_l \times RR\right)$$

Where:

C_{ex} = concentration of the pollutant in the extract.

A_n = area of the characteristic m/z for the pollutant.

C_l = concentration of the labeled compound in the extract.

A_l = area of the characteristic m/z for the labeled compound.

RR = response ratio from the initial calibration.

14.2.2 For the IPR (Section 9.3.2) and OPR (Section 9.6), compute the percent recovery of each pollutant using the equation in Section 14.6. The percent recovery is used for the evaluation of method and laboratory performance, in the form of IPR (Section 9.3.2) and OPR (Section 9.6).

14.3 Quantitative determination by internal standard: Compute the concentration using the response factor determined from calibration data (Section 10.5) and the following equation:

$$C_{ex}(\mu g/mL) = \left(A_s \times C_{is}\right) / \left(A_{is} \times RF\right)$$

Where:

C_{ex} = concentration of the pollutant in the extract.

A_s = area of the characteristic m/z for the pollutant.

C_{is} = concentration of the internal standard in the extract (see note below).

A_{is} = area of the characteristic m/z for the internal standard.

RF = response factor from the initial calibration.

NOTE: When this equation is used to compute the extract concentrations of native compounds without labeled analogs, use the

area (A_{is}) and concentration (C_{is}) of 3,4,5-trichlorophenol (SMIS) as the internal standard.

For the IPR (Section 9.3.2) and OPR (Section 9.6), compute the percent recovery using the equation in Section 14.6.

NOTE: Separate calibration curves will be required for samples with and without the addition of ascorbic acid, and also for both extraction procedures (stir-bar and separatory funnel) where applicable.

14.4 Compute the concentration of the labeled compounds and the SMIS using the equation in Section 14.3, but using the area and concentration of the 2,2′-difluorobiphenyl as the internal standard, and the area of the labeled compound or SMIS as A_s.

14.5 Compute the concentration of each pollutant compound in the sample using the following equation:

$$C_s = (\mu g/L) = \frac{(C_{ex} \times V_{ex})}{V_o}$$

Where:

C_s = Concentration of the pollutant in the sample.

C_{ex} = Concentration of the pollutant in the extract.

V_{ex} = Volume of the concentrated extract (typically 0.5 mL).

V_o = Volume of the original sample in liters.

14.6 Compute the recovery of each labeled compound and the SMIS as the ratio of concentration (or amount) found to the concentration (or amount) spiked, using the following equation:

$$\text{Percent recovery} = \frac{\text{Concentration found}}{\text{Concentration spiked}} \times 100$$

These percent recoveries are used to assess method performance according to Sections 9 and 13.

14.7 If the EICP area at the quantitation m/z for any compound exceeds the calibration range of the system, three approaches are used to obtain results within the calibration range.

14.7.1 If the recoveries of all the labeled compounds in the original sample aliquot meet the limits in Table 5, then the extract of the sample may be diluted by a maximum of a factor of 10, and the diluted extract reanalyzed.

14.7.2 If the recovery of any labeled compound is outside its limits in Table 5, or if a tenfold dilution of the extract will not bring the pollutant within the calibration range, then extract and analyze a dilute aliquot of the sample (Section 11). Dilute 100 mL, 10 mL, or an appropriate volume of sample to 1000 mL with reagent water and extract per Section 11.

14.7.3 If the recoveries of all labeled compounds in the original sample aliquot (Section 14.7.1) meet the limits in Table 5, and if the sample holding time has been exceeded, then the original sample extract is diluted by successive factors of 10, the DFB internal standard is added to give a concentration of 50 µg/mL in the diluted extract, and the diluted extract is analyzed. Quantitation of all analytes is performed using the DFB internal standard.

14.7.4 If the recoveries of all labeled compounds in the original sample aliquot (Section 14.7.1) or in the dilute aliquot (Section 14.7.2) (if a dilute aliquot was analyzed) do not meet the limits in Table 5, and if the holding time has been exceeded, re-sampling is required.

14.8 Results are reported for all pollutants, labeled compounds, and the sample matrix internal standard in standards, blanks, and samples, in units of µg/L.

14.8.1 Results for samples which have been diluted are reported at the least dilute level at which the area at the quantitation m/z is within the calibration range (Section 14.7).

14.8.2 For compounds having a labeled analog, results are reported at the least dilute level at which the area at the quantitation m/z is within the calibration range (Section 14.7) and the labeled compound recovery is within the normal range for the method (Section 13.3).

15.0 Method Performance

15.1 Single laboratory performance for this method is detailed in References 1, 2, and 11. Acceptance criteria were established from multiple laboratory use of the draft method.

15.2 A chromatogram of the ongoing precision and recovery standard (Section 7.14) is shown in Figure 4.

16.0 Pollution Prevention

16.1 The solvents used in this method pose little threat to the environment when recycled and managed properly.

16.2 Standards should be prepared in volumes consistent with laboratory use to minimize the volume of expired standards to be disposed.

17.0 Waste Management

17.1 It is the laboratory's responsibility to comply with all federal, state, and local regulations governing waste management, particularly the hazardous waste identification rules and land disposal restrictions, and to protect the air, water, and land by minimizing and controlling all releases from fume hoods and bench operations. Compliance with all sewage discharge permits and regulations is also required.

17.2 Samples preserved with HCl or H_2SO_4 to pH < 2 are hazardous and must be neutralized before being disposed, or must be handled as hazardous waste.

17.3 For further information on waste management, consult ''The Waste Management Manual for Laboratory Personnel'', and ''Less is Better: Laboratory Chemical Management for Waste Reduction'', both available from the American Chemical Society's Department of Government Relations and Science Policy, 1155 16th Street N.W., Washington, DC 20036.

18.0 References

18.1 ''Chlorinated Phenolics in Water by In Situ Acetylation/GC/MS Determination,'' Method CP–86.01, National Council of the Paper Industry for Air and Stream Improvement, Inc., 260 Madison Avenue, New York, NY 10016 (July 1986).

18.2 ''6240-Chlorinated Phenolics (Interim Standard),'' Draft Version, U.S. Environmental Protection Agency, Manchester Laboratory, Manchester, Washington.

18.3 ''Performance Tests for the Evaluation of Computerized Gas Chromatography/Mass Spectrometry Equipment and Laboratories,'' USEPA, EMSL Cincinnati, OH 45268, EPA–600/4–80–025 (April 1980).

18.4 ''Working with Carcinogens,'' DHEW, PHS, CDC, NIOSH, Publication 77–206 (August 1977).

18.5 ''OSHA Safety and Health Standards, General Industry,'' OSHA 2206, 29 CFR 1910 (January 1976).

18.6 ''Safety in Academic Chemistry Laboratories,'' ACS Committee on Chemical Safety (1979).

18.7 ''Interlaboratory Validation of U. S. Environmental Protection Agency Method 1625A, Addendum Report,'' SRI International, Prepared for Analysis and Evaluation Division (WH–557), USEPA, 401 M St., SW., Washington, DC 20460 (January 1985).

18.8 ''Handbook of Analytical Quality Control in Water and Wastewater Laboratories,'' USEPA, EMSL, Cincinnati, OH 45268, EPA–600/4–79–019 (March 1979).

18.9 ''Standard Practice for Sampling Water,'' ASTM Annual Book of Standards, ASTM, Philadelphia, PA, 76 (1980).

18.10 ''Methods 330.4 and 330.5 for Total Residual Chlorine,'' USEPA, EMSL, Cincinnati, OH 45268, EPA 600/4–70–020 (March 1979).

18.11 ''Determination of Chlorophenolics, Special Analytical Services Contract 1047, Episode 1886,'' Analytical Technologies, Inc., Prepared for W. A. Telliard, Industrial Technology Division (WH–552), USEPA, 401 M St., SW., Washington, DC 20460 (June 1990).

18.12 ''Determination of Chlorophenolics by GCMS, Development of Method 1653,'' Analytical Technologies, Inc., Prepared for W. A. Telliard, Industrial Technology Division (WH–552), USEPA, 401 M St., SW., Washington, DC 20460 (May 1991).

19.0 Tables and Figures

TABLE 1—CHLOROPHENOLIC COMPOUNDS DETERMINED BY GCMS USING ISOTOPE DILUTION AND INTERNAL STANDARD TECHNIQUES

Compound	Pollutant		Labeled compound		
	CAS registry	EPA–EGD	Analog	CAS registry	EPA–EGD
4-chlorophenol	106–48–9	1001			
2,4-dichlorophenol	120–83–2	1002	d_3	93951–74–7	1102
2,6-dichlorophenol	87–65–0	1003			
2,4,5-trichlorophenol	95–95–4	1004			
2,4,6-trichlorophenol	88–06–2	1005			
2,3,4,6-tetrachlorophenol	58–90–2	1006			
pentachlorophenol	87–86–5	1007	$^{13}C_6$	85380–74–1	1107
4-chloroguaiacol	16766–30–6	1008	$^{13}C_6$	136955–39–0	1108
3,4-dichloroguaiacol	77102–94–4	1009			
4,5-dichloroguaiacol	2460–49–3	1010			
4,6-dichloroguaiacol	16766–31–7	1011			
3,4,5-trichloroguaiacol	57057–83–7	1012			
3,4,6-trichloroguaiacol	60712–44–9	1013			
4,5,6-trichloroguaiacol	2668–24–8	1014	$^{13}C_6$	136955–40–3	1114
tetrachloroguaiacol	2539–17–5	1015	$^{13}C_6$	136955–41–4	1115
4-chlorocatechol	2138–22–9	1016			
3,4-dichlorocatechol	3978–67–4	1017			
3,6-dichlorocatechol	3938–16–7	1018			
4,5-dichlorocatechol	3428–24–8	1019	$^{13}C_6$	136955–42–5	1119

TABLE 1—CHLOROPHENOLIC COMPOUNDS DETERMINED BY GCMS USING ISOTOPE DILUTION AND INTERNAL STANDARD TECHNIQUES—Continued

Compound	Pollutant		Labeled compound		
	CAS registry	EPA–EGD	Analog	CAS registry	EPA–EGD
3,4,5-trichlorocatechol	56961–20–7	1020			
3,4,6-trichlorocatechol	32139–72–3	1021			
tetrachlorocatechol	1198–55–6	1022	$^{13}C_6$	136955–43–6	1122
5-chlorovanillin	19463–48–0	1023	$^{13}C_6$	136955–44–7	1123
6-chlorovanillin	18268–76–3	1024			
5,6-dichlorovanillin	18268–69–4	1025			
2-chlorosyringaldehyde	76341–69–0	1026			
2,6-dichlorosyringaldehyde	76330–06–8	1027			
trichlorosyringol	2539–26–6	1028			
Sample matrix internal standard (SMIS)					
3,4,5-trichlorophenol	609–19–8	184			
Instrument internal standard (IIS)					
2,2'-difluorobiphenyl	388–82–9	164			

TABLE 2—GAS CHROMATOGRAPHY AND METHOD DETECTION LIMITS FOR CHLOROPHENOLICS

EGD No.[1]	Compound	Retention time mean (sec)[2]	EGD ref No.	RRT window[3]	Minimum level[4] (µg/L)	MDL[5] (µg/L)
1001	4-chlorophenol	691	184	0.651–0.681	1.25	1.11
1003	2,6-dichlorophenol	796	184	0.757–0.779	2.5	1.39
1102	2,4-dichlorophenol-d_3	818	164	0.986–0.998		
1202	2,4-dichlorophenol	819	1102	0.997–1.006	2.5	0.15
164	2,2'-difluorobiphenyl (I.S.)	825	164	1.000		
1108	4-chloroguaiacol-$^{13}C_6$	900	164	1.077–1.103		
1208	4-chloroguaiacol	900	1108	0.998–1.002	1.25	0.09
1005	2,4,6-trichlorophenol	920	184	0.879–0.895	2.5	0.71
1004	2,4,5-trichlorophenol	979	184	0.936–0.952	2.5	0.57
1016	4-chlorocatechol	1004	184	0.961–0.975	1.25	0.59
1011	4,6-dichloroguaiacol	1021	184	0.979–0.991	2.5	0.45
1009	3,4-dichloroguaiacol	1029	184	0.986–0.998	2.5	0.52
184	3,4,5-trichlorophenol (I.S.)	1037	164	1.242–1.272		
1010	4,5-dichloroguaiacol	1071	184	1.026–1.040	2.5	0.52
1018	3,6-dichlorocatechol	1084	184	1.037–1.053	2.5	0.57
1006	2,3,4,6-tetrachlorophenol	1103	184	1.050–1.078	2.5	0.38
1123	5-chlorovanillin-$^{13}C_6$	1111	164	1.327–1.367		
1223	5-chlorovanillin	1111	1123	0.998–1.001	2.5	1.01
1013	3,4,6-trichloroguaiacol	1118	184	1.066–1.090	2.5	0.46
1024	6-chlorovanillin	1122	184	1.070–1.094	2.5	0.94
1017	3,4-dichlorocatechol	1136	184	1.083–1.105	2.5	0.60
1119	4,5-dichlorocatechol-$^{13}C_6$	1158	164	1.384–1.424		
1219	4,5-dichlorocatechol	1158	1119	0.998–1.001	2.5	0.24
1012	3,4,5-trichloroguaiacol	1177	184	1.120–1.160	2.5	0.49
1114	4,5,6-trichloroguaiacol-$^{13}C_6$	1208	164	1.444–1.484		
1214	4,5,6-trichloroguaiacol	1208	1114	0.998–1.002	2.5	0.25
1021	3,4,6-trichlorocatechol	1213	184	1.155–1.185	5.0	0.44
1025	5,6-dichlorovanillin	1246	184	1.182–1.222	5.0	0.80
1026	2-chlorosyringaldehyde	1255	184	1.190–1.230	2.5	0.87
1107	pentachlorophenol-$^{13}C_6$	1267	164	1.511–1.561		
1207	pentachlorophenol	1268	1107	0.998–1.002	5.0	0.28
1020	3,4,5-trichlorocatechol	1268	184	1.208–1.238	5.0	0.53
1115	tetrachloroguaiacol-$^{13}C_6$	1289	164	1.537–1.587		
1215	tetrachloroguaiacol	1290	1115	0.998–1.002	5.0	0.23
1028	trichlorosyringol	1301	184	1.240–1.270	2.5	0.64
1122	tetrachlorocatechol-$^{13}C_6$	1365	164	1.630–1.690		
1222	tetrachlorocatechol	1365	1122	0.998–1.002	5.0	0.76
1027	2,6-dichlorosyringaldehyde	1378	184	1.309–1.349	5.0	1.13

[1] Four digit numbers beginning with 10 indicate a pollutant quantified by the internal standard method; four digit numbers beginning with 11 indicate a labeled compound quantified by the internal standard method; four digit numbers beginning with 12 indicate a pollutant quantified by isotope dilution.
[2] The retention times in this column are based on data from a single laboratory (reference 12), utilizing the GC conditions in Section 11.
[3] Relative retention time windows are estimated from EPA Method 1625.
[4] The minimum level (ML) is defined as the level at which the entire analytical system must give a recognizable signal and acceptable calibration point for the analyte. It is equivalent to the concentration of the lowest calibration standard, assuming that all method-specified sample weights, volumes, and cleanup procedures have been employed.
[5] 40 CFR Part 136, Appendix B; from reference 2.

TABLE 3—DFTPP MASS INTENSITY SPECIFICATIONS [1]

Mass	Intensity required
51	8 to 82% of m/z 198.
68	Less than 2% of m/z 69.
69	11 to 91% of m/z 198.
70	Less than 2% of m/z 69.
127	32 to 59% of m/z 198.
197	Less than 1% of m/z 198.
198	Base peak, 100% abundance.
199	4 to 9% of m/z 198.
275	11 to 30% of m/z 198.
441	44 to 110% of m/z 443.
442	30 to 86% of m/z 198.
443	14 to 24% of m/z 442.

[1] Reference 7.

TABLE 4—CHARACTERISTIC M/Z'S OF CHLOROPHENOLIC COMPOUNDS

Compound	Primary m/z
4-chlorophenol	128
2,4-dichlorophenol	162
2,4-dichlorophenol-d_3	167
2,6-dichlorophenol	162
2,4,5-trichlorophenol	196
2,4,6-trichlorophenol	196
2,3,4,6-tetrachlorophenol	232
pentachlorophenol	266
pentachlorophenol$-^{13}C_6$	272
4-chloroguaiacol	158
4-chloroguaiacol$-^{13}C_6$	164
3,4-dichloroguaiacol	192
4,5-dichloroguaiacol	192
4,6-dichloroguaiacol	192
3,4,5-trichloroguaiacol	226
3,4,6-trichloroguaiacol	226
4,5,6-trichloroguaiacol	226
4,5,6-trichloroguaiacol$-^{13}C_6$	234
tetrachloroguaiacol	262
tetrachloroguaiacol$-^{13}C_6$	268
4-chlorocatechol	144
3,4-dichlorocatechol	178
3,6-dichlorocatechol	178
4,5-dichlorocatechol	178
4,5-dichlorocatechol$-^{13}C_6$	184
3,4,5-trichlorocatechol	212
3,4,6-trichlorocatechol	212
tetrachlorocatechol	248
tetrachlorocatechol$-^{13}C_6$	254
5-chlorovanillin	186
5-chlorovanillin$-^{13}C_6$	192
6-chlorovanillin	186
5,6-dichlorovanillin	220
2-chlorosyringaldehyde	216
2,6-dichlorosyringaldehyde	250
trichlorosyringol	256
Sample Matrix Internal Standard (SMIS)	
3,4,5-trichlorophenol	196
Instrument Internal Standard (IIS)	
2,2′-difluorobiphenyl	190

TABLE 5—ACCEPTANCE CRITERIA FOR PERFORMANCE TESTS [1]

EGD No.[2]	Compound	Test conc.[3] (µg/mL)	Initial precision and recovery sec. 9.3.2 (percent)		Ongoing recovery sec. 9.6 (percent)	Labeled compound and SMIS recovery sec. 9.4 and 14.6	
			s	X		With ascorbic acid P (%)	Without ascorbic acid P (%)
1001	4-chlorophenol	25	64	72–144	40–236		
1202	2,4-dichlorophenol	50	14	84–120	84–118		
1102	2,4-dichlorophenol-d_3	25	54	64–160	56–170	58–135	27–143
1003	2,6-dichlorophenol	50	20	66–148	58–170		
1004	2,4,5-trichlorophenol	50	14	78–140	82–128		
1005	2,4,6-trichlorophenol	50	20	72–142	72–146		
1006	2,3,4,6-tetrachlorophenol	50	14	80–132	82–132		
1207	pentachlorophenol	100	6	90–111	84–120		
1107	pentachlorophenol-$^{13}C_6$	25	21	58–169	61–157	8–143	27–167
1208	4-chloroguaiacol	25	20	88–120	88–120		
1108	4-chloroguaiacol-$^{13}C_6$	25	104	68–148	64–152	59–121	43–168
1009	3,4-dichloroguaiaco [4]	50	18	80–126	82–126		
1010	4,5-dichloroguaiacol	50	14	82–121	80–128		
1011	4,6-dichloroguaiacol	50	16	82–126	86–120		
1012	3,4,5-trichloroguaiacol	50	16	78–130	80–134		
1013	3,4,6-trichloroguaiacol	50	16	64–152	74–140		
1214	4,5,6-trichloroguaiacol	50	14	92–106	88–116		
1114	4,5,6-trichloroguaiacol-$^{13}C_6$	25	48	66–146	74–140	48–131	51–139
1215	tetrachloroguaiacol	100	7	84–115	81–126		
1115	tetrachloroguaiacol-$^{13}C_6$	25	22	57–173	65–161	35–120	27–161
1016	4-chlorocatechol	25	48	76–140	80–124		
1017	3,4-dichlorocatechol	50	24	66–154	78–134		
1018	3,6-dichlorocatechol	50	16	78–136	84–126		
1219	4,5-dichlorocatechol	50	8	84–118	86–122		
1119	4,5-dichlorocatechol-$^{13}C_6$	25	78	68–144	66–142	33–129	0–190
1020	3,4,5-trichlorocatechol	100	17	60–166	72–128		
1021	3,4,6-trichlorocatechol [4]	100	17	74–138	64–149		
1222	tetrachlorocatechol	100	29	46–234	81–132		
1122	tetrachlorocatechol-$^{13}C_6$	25	39	48–227	63–152	14–118	0–184
1223	5-chlorovanillin	50	20	94–208	84–118		
1123	5-chlorovanillin-$^{13}C_6$	25	84	68–160	70–144	51–126	32–254
1024	6-chlorovanillin	50	22	82–128	80–126		
1025	5,6-dichlorovanillin	100	9	67–146	77–140		
1026	2-chlorosyringaldehyde	50	28	76–130	72–156		

TABLE 5—ACCEPTANCE CRITERIA FOR PERFORMANCE TESTS [1]—Continued

EGD No.[2]	Compound	Test conc.[3] (µg/mL)	Initial precision and recovery sec. 9.3.2 (percent)		Ongoing recovery sec. 9.6 (percent)	Labeled compound and SMIS recovery sec. 9.4 and 14.6	
			s	X		With ascorbic acid P (%)	Without ascorbic acid P (%)
1027	2,6-dichlorosyringaldehyde	100	14	82–129	60–183		
1028	trichlorosyringol	50	18	76–136	66–174		
Sample Matrix Internal Standard							
184	3,4,5-trichlorophenol	100	47	62–185	68–144	56–116	24–167

[1] Specifications derived from multi-laboratory testing of draft method.
[2] Four-digit numbers beginning with 10 indicate a pollutant quantified by the internal standard method; four-digit numbers beginning with 11 indicate a labeled compound quantified by the internal standard method; four-digit numbers beginning with 12 indicate a pollutant quantified by isotope dilution.
[3] Test concentrations are in units of µg/mL.
[4] Specification derived from isomer.

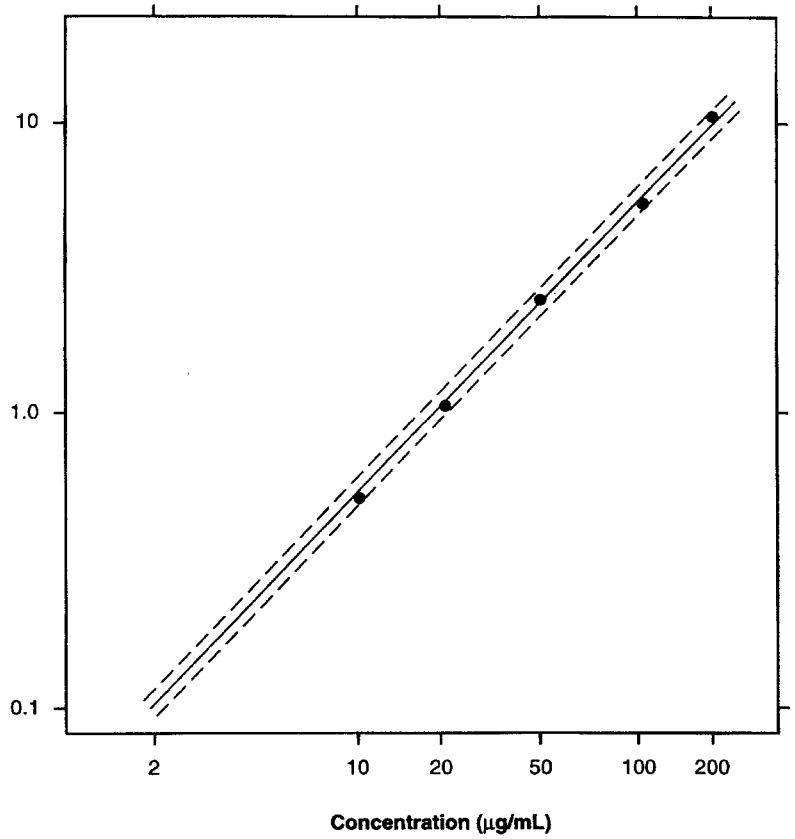

The dotted lines enclose a ±10% error window.

52-020-21A

Figure 1. Relative Response Calibration Curve for Phenol

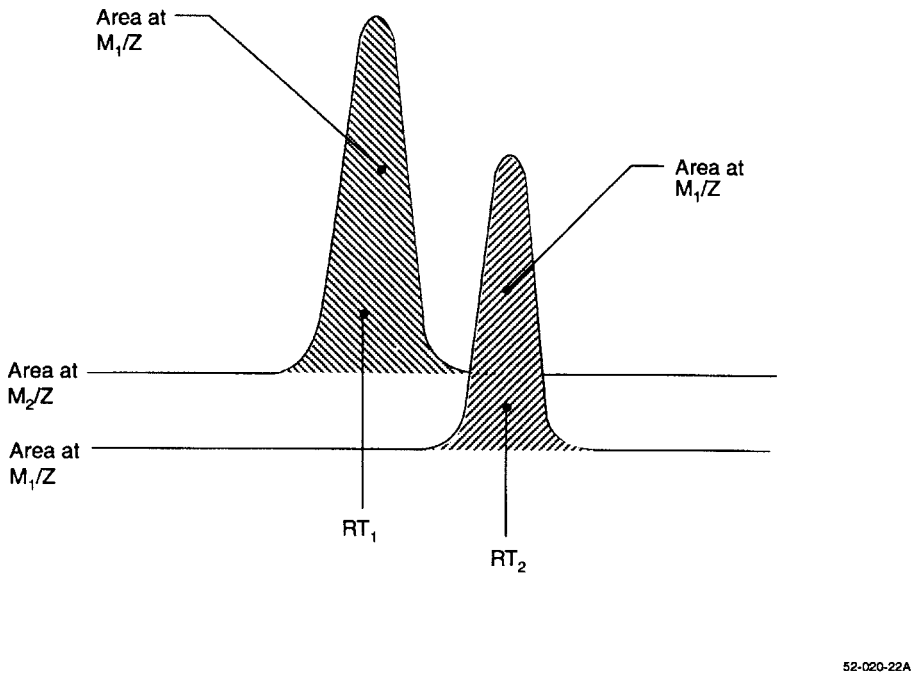

Figure 2. Extracted Ion-Current Profiles for Chromatographically Resolved Labeled (M_2/Z) and Unlabeld (M_1/Z) Pairs

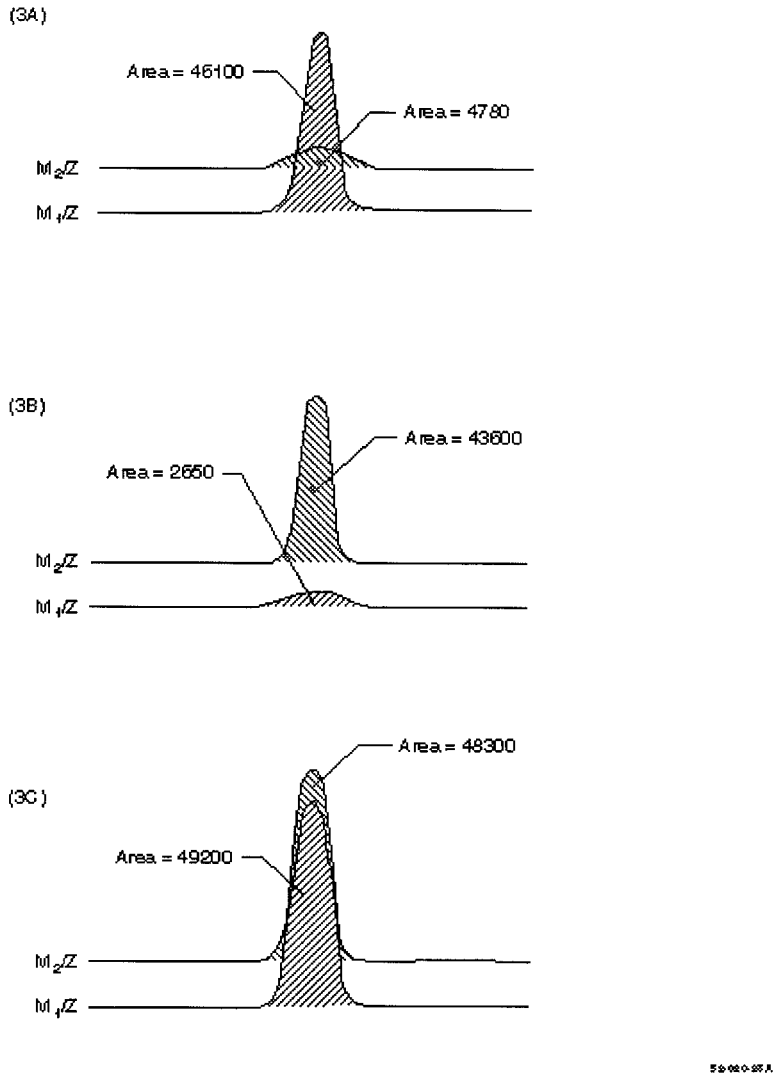

Figure 3. Extracted Ion-Current Profiles for (3A) Unlabeled Compound, (3B) Labeled Compound, and (3C) Equal Mixture of Unlabeled and Labeled Compounds.

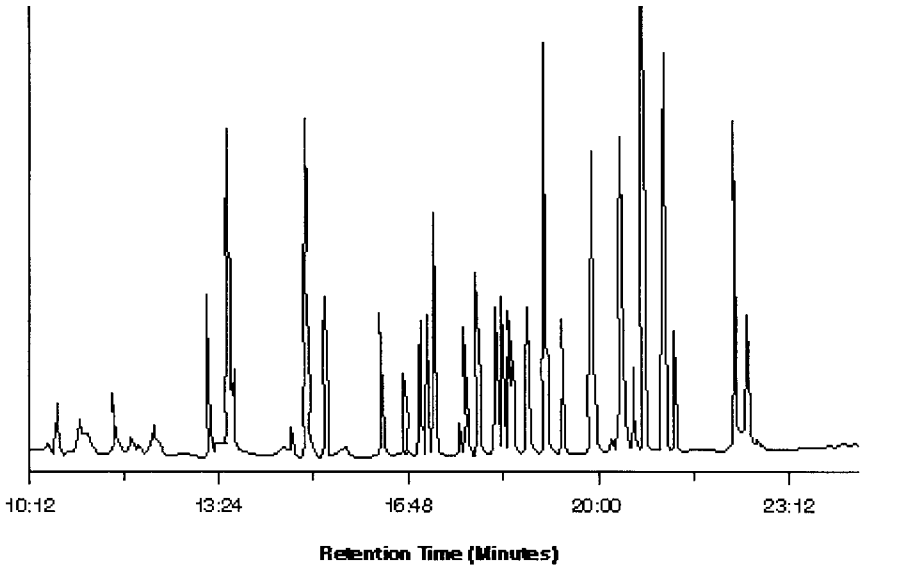

Figure 4. Chromatogram of Chlorophenolics

20.0 Glossary of Definitions and Purposes

These definitions and purposes are specific to this method but have been conformed to common usage as much as possible.

20.1 Units of weight and measure and their abbreviations

20.1.1 Symbols.

°C degrees Celsius
µL microliter
< less than
> greater than
% percent

20.1.2 Alphabetical characters.

cm centimeter
g gram
h hour
ID inside diameter
in. inch
L liter
M Molecular ion
m meter
mg milligram
min minute
mL milliliter
mm millimeter
m/z mass-to-charge ratio
N normal; gram molecular weight of solute divided by hydrogen equivalent of solute, per liter of solution
OD outside diameter
pg picogram
ppb part-per-billion
ppm part-per-million
ppt part-per-trillion
psig pounds-per-square inch gauge
v/v volume per unit volume
w/v weight per unit volume

20.2 Definitions and acronyms (in alphabetical order).

Analyte: A chlorophenolic tested for by this method.

The analytes are listed in Table 1.

Calibration standard (CAL): A solution prepared from a secondary standard and/or stock solutions and used to calibrate the response of the instrument with respect to analyte concentration.

Calibration verification standard (VER): The mid-point calibration standard (CS3) that is used to verify calibration. See Table 4.

Chlorophenolics: collectively, the analytes listed in Table 1.

CS1, CS2, CS3, CS4, CS5: See Calibration standards and Table 4.

Field blank: An aliquot of reagent water or other reference matrix that is placed in a sample container in the laboratory or the field, and treated as a sample in all respects, including exposure to sampling site conditions, storage, preservation, and all analytical procedures. The purpose of the field blank is to determine if the field or sample transporting procedures and environments have contaminated the sample.

GC: Gas chromatograph or gas chromatography.

HRGC: High resolution GC.

IPR: Initial precision and recovery; four aliquots of the diluted PAR standard analyzed to establish the ability to generate acceptable precision and accuracy. An IPR is performed prior to the first time this method is used and any time the method or instrumentation is modified.

K–D: Kuderna-Danish concentrator; a device used to concentrate the analytes in a solvent.

Laboratory blank: See Method blank.

Laboratory control sample (LCS): See Ongoing precision and recovery standard (OPR).

Laboratory reagent blank: See Method blank.

May: This action, activity, or procedural step is neither required nor prohibited.

May not: This action, activity, or procedural step is prohibited.

Method blank: An aliquot of reagent water that is treated exactly as a sample including exposure to all glassware, equipment, solvents, reagents, internal standards, and surrogates that are used with samples. The method blank is used to determine if analytes or interferences are present in the laboratory environment, the reagents, or the apparatus.

Minimum level (ML): The level at which the entire analytical system must give a recognizable signal and acceptable calibration point for the analyte. It is equivalent to the concentration of the lowest calibration standard, assuming that all method-specified sample weights, volumes, and cleanup procedures have been employed.

MS: Mass spectrometer or mass spectrometry.

Must: This action, activity, or procedural step is required.

OPR: Ongoing precision and recovery standard (OPR); a laboratory blank spiked with known quantities of analytes. The OPR is analyzed exactly like a sample. Its purpose is to assure that the results produced by the laboratory remain within the limits specified in this method for precision and recovery.

PAR: Precision and recovery standard; secondary standard that is diluted and spiked to form the IPR and OPR.

Preparation blank: See Method blank.

Primary dilution standard: A solution containing the specified analytes that is purchased or prepared from stock solutions and diluted as needed to prepare calibration solutions and other solutions.

Quality control check sample (QCS): A sample containing all or a subset of the analytes at known concentrations. The QCS is obtained from a source external to the laboratory or is prepared from a source of standards different from the source of calibration standards. It is used to check laboratory performance with test materials prepared external to the normal preparation process.

Reagent water: Water demonstrated to be free from the analytes of interest and potentially interfering substances at the method detection limit for the analyte.

Relative standard deviation (RSD): The standard deviation times 100 divided by the mean.

RF: Response factor. See Section 10.5.1.

RR: Relative response. See Section 10.4.4.

RSD: See Relative standard deviation.

Should: This action, activity, or procedural step is suggested but not required.

Stock solution: A solution containing an analyte that is prepared using a reference material traceable to EPA, the National Institute of Science and Technology (NIST), or a source that will attest to the purity and authenticity of the reference material.

VER: See Calibration verification standard.

PART 431 [RESERVED]

PART 432—MEAT PRODUCTS POINT SOURCE CATEGORY

Subpart A—Simple Slaughterhouse Subcategory

Sec.

432.10 Applicability; description of the simple slaughterhouse subcategory.
432.11 Specialized definitions.
432.12 Effluent limitations guidelines representing the degree of effluent reduction attainable by the application of the best practicable control technology currently available.
432.13 [Reserved]
432.14 Pretreatment standards for existing sources.
432.15 Standards of performance for new sources.
432.16 Pretreatment standards for new sources.

432.17 Effluent limitations guidelines representing the degree of effluent reduction attainable by the application of the best conventional pollutant control technology.

Subpart B—Complex Slaughterhouse Subcategory

432.20 Applicability; description of the complex slaughterhouse subcategory.
432.21 Specialized definitions.
432.22 Effluent limitations guidelines representing the degree of effluent reduction attainable by the application of the best practicable control technology currently available.
432.23 [Reserved]
432.24 Pretreatment standards for existing sources.
432.25 Standards of performance for new sources.
432.26 Pretreatment standards for new sources.
432.27 Effluent limitations guidelines representing the degree of effluent reduction attainable by the application of the best conventional pollutant control technology.

Subpart C—Low–Processing Packinghouse Subcategory

432.30 Applicability; description of the low–processing packinghouse subcategory.
432.31 Specialized definitions.
432.32 Effluent limitations guidelines representing the degree of effluent reduction attainable by the application of the best practicable control technology currently available.
432.33 [Reserved]
432.34 Pretreatment standards for existing sources.
432.35 Standards of performance for new sources.
432.36 Pretreatment standards for new sources.
432.37 Effluent limitations guidelines representing the degree of effluent reduction attainable by the application of the best conventional pollutant control technology.

Subpart D—High–Processing Packinghouse Subcategory

432.40 Applicability; description of the high–processing packinghouse subcategory.
432.41 Specialized definitions.
432.42 Effluent limitations guidelines representing the degree of effluent reduction attainable by the application of the best practicable control technology currently available.
432.43 [Reserved]
432.44 Pretreatment standards for existing sources.
432.45 Standards of performance for new sources.
432.46 Pretreatment standards for new sources.
432.47 Effluent limitations guidelines representing the degree of effluent reduction attainable by the application of the best conventional pollutant control technology.

Subpart E—Small Processor Subcategory

432.50 Applicability; description of the small processor subcategory.
432.51 Specialized definitions.
432.52 Effluent limitations guidelines representing the degree of effluent reduction attainable by the application of the best practicable control technology currently available.
432.53–432.54 [Reserved]
432.55 Standards of performance for new sources.
432.56 Pretreatment standards for new sources.
432.57 Effluent limitations guidelines representing the degree of effluent reduction attainable by the application of the best conventional pollutant control technology.

Subpart F—Meat Cutter Subcategory

432.60 Applicability; description of the meat cutter subcategory.
432.61 Specialized definitions.
432.62 Effluent limitations guidelines representing the degree of effluent reduction attainable by the application of the best practicable control technology currently available.
432.63 Effluent limitations guidelines representing the degree of effluent reduction attainable by the application of the best available technology economically achievable.
432.64 [Reserved]
432.65 Standards of performance for new sources.
432.66 Pretreatment standards for new sources.
432.67 Effluent limitations guidelines representing the degree of effluent reduction attainable by the application of the best conventional pollutant control technology.

Subpart G—Sausage and Luncheon Meats Processor Subcategory

432.70 Applicability; description of the sausage and luncheon meat processor subcategory.
432.71 Specialized definitions.
432.72 Effluent limitations guidelines representing the degree of effluent reduction

attainable by the application of the best practicable control technology currently available.
432.73 Effluent limitations guidelines representing the degree of effluent reduction attainable by the application of the best available technology economically achievable.
432.74 [Reserved]
432.75 Standards of performance for new sources.
432.76 Pretreatment standards for new sources.
432.77 Effluent limitations guidelines representing the degree of effluent reduction attainable by the application of the best conventional pollutant control technology.

Subpart H—Ham Processor Subcategory

432.80 Applicability; description of the ham processor subcategory.
432.81 Specialized definitions.
432.82 Effluent limitations guidelines representing the degree of effluent reduction attainable by the application of the best practicable control technology currently available.
432.83 Effluent limitations guidelines representing the degree of effluent reduction attainable by the application of the best available technology economically achievable.
432.84 [Reserved]
432.85 Standards of performance for new sources.
432.86 Pretreatment standards for new sources.
432.87 Effluent limitations guidelines representing the degree of effluent reduction attainable by the application of the best conventional pollutant control technology.

Subpart I—Canned Meats Processor Subcategory

432.90 Applicability; description of the canned meats processor subcategory.
432.91 Specialized definitions.
432.92 Effluent limitations guidelines representing the degree of effluent reduction attainable by the application of the best practicable control technology currently available.
432.93 Effluent limitations guidelines representing the degree of effluent reduction attainable by the application of the best available technology economically achievable.
432.94 [Reserved]
432.95 Standards of performance for new sources.
432.96 Pretreatment standards for new sources.
432.97 Effluent limitations guidelines representing the degree of effluent reduction attainable by the application of the best conventional pollutant control technology.

Subpart J—Renderer Subcategory

432.100 Applicability; description of the renderer subcategory.
432.101 Specialized definitions.
432.102 Effluent limitations guidelines representing the degree of effluent reduction attainable by the application of the best practicable control technology currently available.
432.103 Effluent limitations guidelines representing the degree of effluent reduction attainable by the application of the best available technology economically achievable.
432.104 [Reserved]
432.105 Standards of performance for new sources.
432.106 Pretreatment standards for new sources.
432.107 Effluent limitations guidelines representing the degree of effluent reduction attainable by the application of the best conventional pollution control technology.

AUTHORITY: Secs. 301, 304 (b) and (c), 306 (b) and (c), and 307(c) of the Federal Water Pollution Control Act, as amended; 33 U.S.C. 1251, 1311, 1314 (b) and (c), 1316 (b) and (c), 1317(c); 86 Stat. 816 et seq., Pub. L. 92–500; 91 Stat. 1567, Pub. L. 95–217.

SOURCE: 39 FR 7897, Feb. 28, 1974, unless otherwise noted.

Subpart A—Simple Slaughterhouse Subcategory

§ 432.10 Applicability; description of the simple slaughterhouse subcategory.

The provisions of this subpart are applicable to discharges resulting from the production of red meat carcasses, in whole or part, by simple slaughterhouses.

§ 432.11 Specialized definitions.

For the purpose of this subpart:

(a) Except as provided below, the general definitions, abbreviations and methods of analysis set forth in 40 CFR part 401 shall apply to this subpart.

(b) The term ''slaughterhouse'' shall mean a plant that slaughters animals and has as its main product fresh meat as whole, half or quarter carcasses or smaller meat cuts.

(c) The term ''simple slaughterhouse'' shall mean a slaughterhouse which accomplishes very limited by-product processing, if any, usually no more than two of such operations as rendering, paunch and viscera handling, blood processing, hide processing, or hair processing.

(d) The term ''LWK'' (live weight killed) shall mean the total weight of the total number of animals slaughtered during the time to which the effluent limitations apply; i.e., during any one day or any period of thirty consecutive days.

(e) The term ''ELWK'' (equivalent live weight killed) shall mean the total weight of the total number of animals slaughtered at locations other than the slaughterhouse or packinghouse, which animals provide hides, blood, viscera or renderable materials for processing at that slaughterhouse, in addition to those derived from animals slaughtered on site.

(f) The term ''oil and grease'' shall mean those components of process waste water amenable to measurement by the method described in ''Methods for Chemical Analysis of Water and Wastes,'' 1971, EPA, Analytical Quality Control Laboratory, page 217.

§ 432.12 Effluent limitations guidelines representing the degree of effluent reduction attainable by the application of the best practicable control technology currently available.

Except as provided in §§ 125.30 through 125.32, any existing point source subject to this subpart shall achieve the following effluent limitations representing the degree of effluent reduction attainable by the application of the best practicable control technology currently available (BPT):

(a) The following limitations establish the quantity or quality of pollutants or pollutant properties, controlled by this section and attributable to on-site slaughter or subsequent meat, meat product or by-product processing of carcasses of animals slaughtered on-site, which may be discharged by a point source subject to the provisions of this subpart after application of the best practicable control technology currently available:

Effluent characteristic	Effluent limitations	
	Maximum for any 1 day	Average of daily values for 30 consecutive days shall not exceed—
	Metric units (kilograms per 1,000 kg LWK)	
BOD5	0.24	0.12
TSS	0.40	0.20
Oil and grease	0.12	0.06
Fecal coliform	(1)	(1)
pH	(2)	(2)
	English units (pounds per 1,000 lb LWK)	
BOD5	0.24	0.12
TSS	0.40	0.20
Oil and grease	0.12	0.06
Fecal coliform	(1)	(1)
pH	(2)	(2)

[1] Maximum at any time 400 mpn/100 ml.
[2] Within the range 6.0 to 9.0.

(b) The following limitations establish the quantity or quality of pollutants or pollutant properties, controlled by this section and attributable to the processing (defleshing, washing and curing) of hides derived from animals slaughtered at locations other than the slaughterhouse, which may be discharged by a point source subject to the provisions of this subpart, in addition to the discharge allowed by § 432.12(a):

Effluent characteristic	Effluent limitations	
	Maximum for any 1 day	Average of daily values for 30 consecutive days shall not exceed—
	Metric units (kilograms per 1,000 kg ELWK)	
BOD5	0.04	0.02
TSS	0.08	0.04
	English units (pounds per 1,000 lb ELWK)	
BOD5	0.04	0.02
TSS	0.08	0.04

(c) The following limitations establish the quantity or quality of pollutants or pollutant properties, controlled by this section and attributable to the processing of blood derived from animals slaughtered at locations other than the slaughterhouse, which may be discharged by a point source subject to

the provisions of this subpart, in addition to the discharge allowed by § 432.12(a):

Effluent characteristic	Effluent limitations	
	Maximum for any 1 day	Average of daily values for 30 consecutive days shall not exceed—
	Metric units (kilograms per 1,000 kg ELWK)	
BOD5	0.04	0.02
TSS	0.08	0.04
	English units (pounds per 1,000 lb ELWK)	
BOD5	0.04	0.02
TSS	0.08	0.04

(d) The following limitations establish the quantity or quality of pollutants or pollutant properties, controlled by this section and attributable to the wet or low temperature rendering of material derived from animals slaughtered at locations other than the slaughterhouse, which may be discharged by a point source subject to the provisions of this subpart, in addition to the discharge allowed by § 432.12(a):

Effluent characteristic	Effluent limitations	
	Maximum for any 1 day	Average of daily values for 30 consecutive days shall not exceed—
	Metric units (kilograms per 1,000 kg ELWK)	
BOD5	0.06	0.03
TSS	0.12	0.06
	English units (pounds per 1,000 lb ELWK)	
BOD5	0.06	0.03
TSS	0.12	0.06

(e) The following limitations establish the quantity or quality of pollutants or pollutant properties, controlled by this section and attributable to the dry rendering of material derived from animals slaughtered at locations other than the slaughterhouse, which may be discharged by a point source subject to the provisions of this subpart, in addition to the discharge allowed by § 432.12(a):

Effluent characteristic	Effluent limitations	
	Maximum for any 1 day	Average of daily values for 30 consecutive days shall not exceed—
	Metric units (kilograms per 1,000 kg ELWK)	
BOD5	0.02	0.01
TSS	0.04	0.02
pH	(1)	(1)
	English units (pounds per 1,000 lb ELWK)	
BOD5	0.02	0.01
TSS	0.04	0.02
pH	(1)	(1)

[1] Within the range 6.0 to 9.0.

[39 FR 7897, Feb. 28, 1974, as amended at 60 FR 33964, June 29, 1995]

§ 432.13 [Reserved]

§ 432.14 Pretreatment standards for existing sources.

Any existing source subject to this subpart that introduces process wastewater pollutants into a publicly owned treatment works must comply with 40 CFR part 403. In addition, the following pretreatment standard establishes the quantity or quality of pollutants or pollutant properties controlled by this section which may be discharged to a publicly owned treatment works by a point source subject to the provisions of this subpart.

Pollutant or pollutant property	Pretreatment standard
pH	No limitation.
BOD5	Do.
TSS	Do.
Oil and grease	Do.
Fecal coliform	Do.

[40 FR 6446, Feb. 11, 1975, as amended at 60 FR 33964, June 29, 1995]

§ 432.15 Standards of performance for new sources.

(a) The following standards of performance establish the quantity or quality of pollutants or pollutant properties, controlled by this section and attributable to on-site slaughter or subsequent meat, meat product or byproduct processing of carcasses of animals slaughtered on-site which may be discharged by a new source subject to

the provisions of this subpart: the limitations shall be as specified in § 432.12(a), with the exception that in addition to the pollutants or pollutant properties controlled by that subsection, discharges of ammonia shall not exceed the limitations set forth below:

Effluent characteristic	Effluent limitations	
	Maximum for any 1 day	Average of daily values for 30 consecutive days shall not exceed—
	Metric units (kilograms per 1,000 kg LWK)	
Ammonia	0.34	0.17
	English units (pounds per 1,000 lb LWK)	
Ammonia	0.34	0.17

(b) The following standards of performance establish the quantity or quality of pollutants or pollutant properties, controlled by this section and attributable to the processing of blood derived from animals slaughtered at locations other than the slaughterhouse, which may be discharged by a new source subject to the provisions of this subpart, in addition to the discharge allowed by §§ 432.15(a) and 432.12(c):

Effluent characteristic	Effluent limitations	
	Maximum for any 1 day	Average of daily values for 30 consecutive days shall not exceed—
	Metric units (kilograms per 1,000 kg ELWK)	
Ammonia	0.06	0.03
	English units (pounds per 1,000 lb ELWK)	
Ammonia	0.06	0.03

(c) The following standards of performance establish the quantity or quality of pollutants or pollutant properties, controlled by this section and attributable to the wet or low temperature rendering of material derived from animals slaughtered at locations other than slaughterhouse, which may be discharged by a new source subject to the provisions of this subpart, in addition to the discharge allowed by §§ 432.15(a) and 432.12(d):

Effluent characteristic	Effluent limitations	
	Maximum for any 1 day	Average of daily values for 30 consecutive days shall not exceed—
	Metric units (kilograms per 1,000 kg ELWK)	
Ammonia	0.10	0.05
	English units (pounds per 1,000 lb ELWK)	
Ammonia	0.10	0.05

(d) The following standards of performance establish the quantity or quality of pollutants or pollutant properties, controlled by this section and attributable to the dry rendering of material derived from animals slaughtered at locations other than the slaughterhouse which may be discharged by a new source subject to the provisions of this subpart, in addition to the discharge allowed by §§ 432.15(a) and 432.12(e):

Effluent characteristic	Effluent limitations	
	Maximum for any 1 day	Average of daily values for 30 consecutive days shall not exceed—
	Metric units (kilograms per 1,000 kg ELWK)	
Ammonia	0.04	0.02
	English units (pounds per 1,000 lb ELWK)	
Ammonia	0.04	0.02

[39 FR 7897, Feb. 28, 1974; 39 FR 26423, July 19, 1974]

§ 432.16 Pretreatment standards for new sources.

Any new source subject to this subpart that introduces process wastewater pollutants into a publicly owned treatment works must comply with 40 CFR part 403.

[60 FR 33964, June 29, 1995]

§ 432.17 Effluent limitations guidelines representing the degree of effluent reduction attainable by the application of the best conventional pollutant control technology.

Except as provided in §§ 125.30 through 125.32, any existing point source subject to this subpart shall achieve the following effluent limitations representing the degree of effluent reduction attainable by the application of the best conventional pollutant control technology (BCT): The limitations shall be the same as those specified for conventional pollutants (which are defined in § 401.16) in § 432.12 of this subpart for the best practicable control technology currently available (BPT).

[51 FR 25001, July 9, 1986]

Subpart B—Complex Slaughterhouse Subcategory

§ 432.20 Applicability; description of the complex slaughterhouse subcategory.

The provisions of this subpart are applicable to discharges resulting from the production of red meat carcasses, in whole or part, by complex slaughterhouses.

§ 432.21 Specialized definitions.

For the purpose of this subpart:

(a) Except as provided below, the general definitions, abbreviations and methods of analysis set forth in 40 CFR part 401 shall apply to this subpart.

(b) The term ''slaughterhouse'' shall mean a plant that slaughters animals and has as its main product fresh meat as whole, half or quarter carcasses or smaller meat cuts.

(c) The term ''complex slaughterhouse'' shall mean a slaughterhouse that accomplishes extensive by-product processing, usually at least three of such operations as rendering, paunch and viscera handling, blood processing, hide processing, or hair processing.

(d) The term ''LWK'' (live weight killed) shall mean the total weight of the total number of animals slaughtered during the time to which the effluent limitations apply; i.e., during any one day or any period of thirty consecutive days.

(e) The term ''ELWK'' (equivalent live weight killed) shall mean the total weight of the total number of animals slaughtered at locations other than the slaughterhouse or packinghouse, which animals provide hides, blood, viscera or renderable materials for processing at that slaughterhouse, in addition to those derived from animals slaughtered on site.

(f) The term ''oil and grease'' shall mean those components of process waste water amenable to measurement by the method described in ''Methods for Chemical Analysis of Water and Wastes,'' 1971, EPA, Analytical Quality Control Laboratory, page 217.

§ 432.22 Effluent limitations guidelines representing the degree of effluent reduction attainable by the application of the best practicable control technology currently available.

Except as provided in §§ 125.30 through 125.32, any existing point source subject to this subpart shall achieve the following effluent limitations representing the degree of effluent reduction attainable by the application of the best practicable control technology currently available (BPT):

(a) The following limitations establish the quantity or quality of pollutants or pollutant properties, controlled by this section and attributable to onsite slaughter or subsequent meat, meat product or by-product processing of carcasses of animals slaughtered onsite, which may be discharged by a point source subject to the provisions of this subpart after application of the best practical control technology currently available:

Effluent characteristic	Effluent limitations	
	Maximum for any 1 day	Average of daily values for 30 consecutive days shall not exceed—
	Metric units (kilograms per 1,000 kg LWK)	
BOD5	0.42	0.21
TSS	0.50	0.25
Oil and grease	0.16	0.08
Fecal coliform	(1)	(1)
pH	(2)	(2)
	English units (pounds per 1,000 lb LWK)	
BOD5	0.42	0.21
TSS	0.50	0.25
Oil and grease	0.16	0.08
Fecal coliform	(1)	(1)
pH	(2)	(2)

[1] Maximum at any time 400 mpn/100 ml.
[2] Within the range 6.0 to 9.0.

(b) The following limitations establish the quantity or quality of pollutants or pollutant properties, controlled by this section and attributable to the processing (defleshing, washing and curing) of hides derived from animals slaughtered at locations other than the slaughterhouse, which may be discharged by a point source subject to the provisions of this subpart, in addition to the discharge allowed by paragraph (a) of this section:

Effluent characteristic	Effluent limitations	
	Maximum for any 1 day	Average of daily values for 30 consecutive days shall not exceed—
	Metric units (kilograms per 1,000 kg ELWK)	
BOD5	0.04	0.02
TSS	0.08	0.04
	English units (pounds per 1,000 lb ELWK)	
BOD5	0.04	0.02
TSS	0.08	0.04

(c) The following limitations establish the quantity or quality of pollutants or pollutant properties, controlled by this section and attributable to the processing of blood derived from animals slaughtered at locations other than the slaughterhouse, which may be discharged by a point source subject to the provisions of this subpart, in addition to the discharge allowed by paragraph (a) of this section:

Effluent characteristic	Effluent limitations	
	Maximum for any 1 day	Average of daily values for 30 consecutive days shall not exceed—
	Metric units (kilograms per 1,000 kg ELWK)	
BOD5	0.04	0.02
TSS	0.08	0.04
	English units (pounds per 1,000 lb ELWK)	
BOD5	0.04	0.02
TSS	0.08	0.04

(d) The following limitations establish the quantity or quality of pollutants or pollutant properties, controlled by this section and attributable to the wet or low temperature rendering of material derived from animals slaughtered at locations other than the slaughterhouse, which may be discharged by a point source subject to the provisions of this subpart, in addition to the discharge allowed by paragraph (a) of this section:

Effluent characteristic	Effluent limitations	
	Maximum for any 1 day	Average of daily values for 30 consecutive days shall not exceed—
	Metric units (kilograms per 1,000 kg ELWK)	
BOD5	0.06	0.03
TSS	0.12	0.06
	English units (pounds per 1,000 lb ELWK)	
BOD5	0.06	0.03
TSS	0.12	0.06

(e) The following limitations establish the quantity or quality of pollutants or pollutant properties, controlled by this section and attributable to the dry rendering of material derived from animals slaughtered at locations other than the slaughterhouse, which may be discharged by a point source subject to the provisions of this subpart, in addition to the discharge allowed by paragraph (a):

Effluent characteristic	Effluent limitations	
	Maximum for any 1 day	Average of daily values for 30 consecutive days shall not exceed—
	Metric units (kilograms per 1,000 kg ELWK)	
BOD5	0.02	0.01
TSS	0.04	0.02
	English units (pounds per 1,000 lb ELWK)	
BOD5	0.02	0.01
TSS	0.04	0.02

[39 FR 7897, Feb. 28, 1974; 39 FR 26423, July 19, 1974, as amended at 45 FR 82254, Dec. 15, 1980; 60 FR 33964, June 29, 1995]

§ 432.23 [Reserved]

§ 432.24 Pretreatment standards for existing sources.

Any existing source subject to this subpart that introduces process wastewater pollutants into a publicly owned treatment works must comply with 40 CFR part 403. In addition, the following pretreatment standard establishes the quantity or quality of pollutants or pollutant properties controlled by this section which may be discharged to a publicly owned treatment works by a point source subject to the provisions of this subpart.

Pollutant or pollutant property	Pretreatment standard
pH	No limitation.
BOD5	Do.
TSS	Do.
Oil and grease	Do.
Fecal coliform	Do.

[40 FR 6446, Feb. 11, 1975, as amended at 60 FR 33965, June 29, 1995]

§ 432.25 Standards of performance for new sources.

(a) The following standards of performance establish the quantity or quality of pollutants or pollutant properties, controlled by this section and attributable to on-site slaughter or subsequent meat, meat product or byproduct processing of carcasses of animals slaughtered on-site which may be discharged by a new source subject to the provisions of this subpart: The limitations shall be as specified in § 432.22(a), with the exception that in addition to the pollutants or pollutant properties controlled by that subsection, discharges of ammonia shall not exceed the limitations set forth below:

Effluent characteristic	Effluent limitations	
	Maximum for any 1 day	Average of daily values for 30 consecutive days shall not exceed—
	Metric units (kilograms per 1,000 kg LWK)	
Ammonia	0.48	0.24
	English units (pounds per 1,000 lb LWK)	
Ammonia	0.48	0.24

(b) The following standards of performance establish the quantity or quality of pollutants or pollutant properties, controlled by this section and attributable to the processing of blood derived from animals slaughtered at locations other than the slaughterhouse, which may be discharged by a new source subject to the provisions of this subpart, in addition to the discharge allowed by paragraph (a) of this section and § 432.22(c):

Effluent characteristic	Effluent limitations	
	Maximum for any 1 day	Average of daily values for 30 consecutive days shall not exceed—
	Metric units (kilograms per 1,000 kg ELWK)	
Ammonia	0.06	0.03
	English units (pounds per 1,000 lb ELWK)	
Ammonia	0.06	0.03

(c) The following standards of performance establish the quantity or quality of pollutants or pollutant properties, controlled by this section and attributable to the wet or low temperature rendering of material derived from animals slaughtered at locations other than the slaughterhouse, which may be discharged by a new source subject to the provisions of this subpart, in addition to the discharge allowed by paragraph (a) of this section and § 432.22(d):

Effluent characteristic	Effluent limitations	
	Maximum for any 1 day	Average of daily values for 30 consecutive days shall not exceed—
	Metric units (kilograms per 1,000 kg ELWK)	
Ammonia	0.10	0.05
	English units (pounds per 1,000 lb ELWK)	
Ammonia	0.10	0.05

(d) The following standards of performance establish the quantity or quality of pollutants or pollutant properties, controlled by this section and attributable to the dry rendering of material derived from animals slaughtered at locations other than the slaughterhouse, which may be discharged by a new source subject to the provisions of this subpart, in addition to the discharge allowed by paragraph (a) of this section and § 432.22(e):

Effluent characteristic	Effluent limitations	
	Maximum for any 1 day	Average of daily values for 30 consecutive days shall not exceed—
	Metric units (kilograms per 1,000 kg ELWK)	
Ammonia	0.04	0.02
	English units (pounds per 1,000 lb ELWK)	
Ammonia	0.04	0.02

[39 FR 7897, Feb. 28, 1974; 39 FR 26423, July 19, 1974]

§ 432.26 Pretreatment standards for new sources.

Any new source subject to this subpart that introduces process wastewater pollutants into a publicly owned treatment works must comply with 40 CFR part 403.

[60 FR 33965, June 29, 1995]

§ 432.27 Effluent limitations guidelines representing the degree of effluent reduction attainable by the application of the best conventional pollutant control technology.

Except as provided in §§ 125.30 through 125.32, any existing point source subject to this subpart shall achieve the following effluent limitations representing the degree of effluent reduction attainable by the application of the best conventional pollutant control technology (BCT): The limitations shall be the same as those specified for conventional pollutants (which are defined in § 401.16) in § 432.22 of this subpart for the best practicable control technology currently available (BPT).

[51 FR 25001, July 9, 1986]

Subpart C—Low-Processing Packinghouse Subcategory

§ 432.30 Applicability; description of the low-processing packinghouse subcategory.

The provisions of this subpart are applicable to discharges resulting from the production of red meat carcasses in whole or part, by low-processing packinghouses.

§ 432.31 Specialized definitions.

For the purpose of this subpart:

(a) Except as provided below, the general definitions, abbreviations and methods of analysis set forth in 40 CFR part 401 shall apply to this subpart.

(b) The term ''packinghouse'' shall mean a plant that both slaughters animals and subsequently processes carcasses into cured, smoked, canned or other prepared meat products.

(c) The term ''low processing packinghouse'' shall mean a packinghouse that processes no more than the total animals killed at that plant, normally processing less than the total kill.

(d) The term ''LWK'' (live weight killed) shall mean the total weight of the total number of animals slaughtered during the time to which the effluent limitations apply; i.e., during any one day or any period of thirty consecutive days.

(e) The term ''ELWK'' (equivalent live weight killed) shall mean the total

weight of the total number of animals slaughtered at locations other than the slaughterhouse or packinghouse, which animals provide hides, blood, viscera or renderable materials for processing at that slaughterhouse, in addition to those derived from animals slaughtered on-site.

(f) The term ''oil and grease'' shall mean those components of process waste water amenable to measurement by the method described in ''Methods for Chemical Analysis of Water and Wastes,'' 1971, EPA, Analytical Quality Control Laboratory, page 217.

§ 432.32 Effluent limitations guidelines representing the degree of effluent reduction attainable by the application of the best practicable control technology currently available.

Except as provided in §§ 125.30 through 125.32, any existing point source subject to this subpart shall achieve the following effluent limitations representing the degree of effluent reduction attainable by the application of the best practicable control technology currently available (BPT):

(a) The following limitations establish the quantity or quality of pollutants or pollutant properties, controlled by this section and attributable to on-site slaughter or subsequent meat, meat product or byproduct, processing of carcasses of animals slaughtered on-site, which may be discharged by a point source subject to the provisions of this subpart after application of the best practicable control technology currently available:

Effluent characteristic	Effluent limitations	
	Maximum for any 1 day	Average of daily values for 30 consecutive days shall not exceed—
	Metric units (kilograms per 1,000 kg LWK)	
BOD5	0.34	0.17
TSS	0.48	0.24
Oil and grease	0.16	0.08
Fecal coliform	(1)	(1)
pH	(2)	(2)
	English units (pounds per 1,000 lb LWK)	
BOD5	0.34	0.17
TSS	0.48	0.24
Oil and grease	0.16	0.08
Fecal coliform	(1)	(1)
pH	(2)	(2)

[1] Maximum at any time 400 mpn/100 ml.
[2] Within the range 6.0 to 9.0.

(b) The following limitations establish the quantity or quality of pollutants or pollutant properties, controlled by this section and attributable to the processing (defleshing, washing and curing) of hides derived from animals slaughtered at locations other than the packinghouse, which may be discharged by a point source subject to the provisions of this subpart, in addition to the discharge allowed by paragraph (a) of this section:

Effluent characteristic	Effluent limitations	
	Maximum for any 1 day	Average of daily values for 30 consecutive days shall not exceed—
	Metric units (kilograms per 1,000 kg ELWK)	
BOD5	0.04	0.02
TSS	0.08	0.04

(c) The following limitations establish the quantity or quality of pollutants or pollutant properties, controlled by this section and attributable to the processing of blood derived from animals slaughtered at locations other than the packinghouse, which may be discharged by a point source subject to

the provisions of this subpart, in addition to the discharge allowed by paragraph (a) of this section:

Effluent characteristic	Effluent limitations	
	Maximum for any 1 day	Average of daily values for 30 consecutive days shall not exceed—
	Metric units (kilograms per 1,000 kg ELWK)	
BOD5	0.04	0.02
TSS	0.08	0.04
	English units (pounds per 1,000 lb ELWK)	
BOD5	0.04	0.02
TSS	0.08	0.04

(d) The following limitations establish the quantity or quality of pollutants or pollutant properties, controlled by this section and attributable to the wet or low temperature rendering of material derived from animals slaughtered at locations other than the packinghouse, which may be discharged by a point source subject to the provisions of this subpart, in addition to the discharge allowed by paragraph (a) of this section:

Effluent characteristic	Effluent limitations	
	Maximum for any 1 day	Average of daily values for 30 consecutive days shall not exceed—
	Metric units (kilograms per 1,000 kg ELWK)	
BOD5	0.06	0.03
TSS	0.12	0.06
	English units (pounds per 1,000 lb ELWK)	
BOD5	0.06	0.03
TSS	0.12	0.06

(e) The following limitations establish the quantity or quality of pollutants or pollutant properties, controlled by this section and attributable to the dry rendering of material derived from animals slaughtered at locations other than the packinghouse, which may be discharged by a point source subject to the provisions of this subpart, in addition to the discharge allowed by paragraph (a) of this section:

Effluent characteristic	Effluent limitations	
	Maximum for any 1 day	Average of daily values for 30 consecutive days shall not exceed—
	Metric units (kilograms per 1,000 kg ELWK)	
BOD5	0.02	0.01
TSS	0.04	0.02
	English units (pounds per 1,000 lb ELWK)	
BOD5	0.02	0.01
TSS	0.04	0.02

[39 FR 7897, Feb. 28, 1974, as amended at 60 FR 33965, June 29, 1995]

§ 432.33 [Reserved]

§ 432.34 Pretreatment standards for existing sources.

Any existing source subject to this subpart that introduces process wastewater pollutants into a publicly owned treatment works must comply with 40 CFR part 403. In addition, the following pretreatment standard establishes the quantity or quality of pollutants or pollutant properties controlled by this section which may be discharged to a publicly owned treatment works by a point source subject to the provisions of this subpart.

Pollutant or pollutant property	Pretreatment standard
pH	No limitation.
BOD5	Do.
TSS	Do.
Oil and grease	Do.
Fecal coliform	Do.

[40 FR 6447, Feb. 11, 1975, as amended at 60 FR 33965, June 29, 1995]

§ 432.35 Standards of performance for new sources.

(a) The following standards of performance establish the quantity or quality of pollutants or pollutant properties, controlled by this section and attributable to on-site slaughter or subsequent meat, meat product or by product processing of carcasses of animals slaughtered on-site which may be discharged by a new source subject to the provisions of this subpart: The limitations shall be as specified in § 432.32(a), with the exception that in

addition to the pollutants or pollutant properties controlled by that subsection, discharges of ammonia shall not exceed the limitations set forth below:

Effluent characteristic	Effluent limitations	
	Maximum for any 1 day	Average of daily values for 30 consecutive days shall not exceed—
	Metric units (kilograms per 1,000 kg LWK)	
Ammonia	0.48	0.24
	English units (pounds per 1,000 lb LWK)	
Ammonia	0.48	0.24

(b) The following standards of performance establish the quantity or quality of pollutants or pollutant properties, controlled by this section and attributable to the processing of blood derived from animals slaughtered at locations other than the packinghouse, which may be discharged by a new source subject to the provisions of this subpart, in addition to the discharge allowed by paragraph (a) of this section and § 432.32(c):

Effluent characteristic	Effluent limitations	
	Maximum for any 1 day	Average of daily values for 30 consecutive days shall not exceed—
	Metric units (kilograms per 1,000 kg ELWK)	
Ammonia	0.06	0.03
	English units (pounds per 1,000 lb ELWK)	
Ammonia	10.06	0.03

(c) The following standards of performance establish the quantity or quality of pollutants or pollutant properties, controlled by this section and attributable to the wet or low temperature rendering of material derived from animals slaughtered at locations other than the packinghouse, which may be discharged by a new source subject to the provisions of this subpart, in addition to the discharge allowed by paragraph (a) of this section and § 432.32(a).

Effluent characteristic	Effluent limitations	
	Maximum for any 1 day	Average of daily values for 30 consecutive days shall not exceed—
	Metric units (kilograms per 1,000 kg ELWK)	
Ammonia	0.10	0.05
ENT A='01'≤English units (pounds per 1,000 lb ELWK)		
Ammonia	0.10	0.05

(d) The following standards of performance establish the quantity or quality of pollutants or pollutant properties, controlled by this section and attributable to the dry rendering of material derived from animals slaughtered at locations other than the packinghouse, which may be discharged by a new source subject to the provisions of this subpart, in addition to the discharge allowed by paragraph (a) of this section and § 432.32(e):

Effluent characteristic	Effluent limitations	
	Maximum for any 1 day	Average of daily values for 30 consecutive days shall not exceed—
	Metric units (kilograms per 1,000 kg ELWK)	
Ammonia	0.04	0.02
	English units (pounds per 1,000 lb ELWK)	
Ammonia	0.04	0.02

[39 FR 7897, Feb. 28, 1974; 39 FR 26423, July 19, 1974]

§ 432.36 Pretreatment standards for new sources.

Any new source subject to this subpart that introduces process wastewater pollutants into a publicly owned treatment works must comply with 40 CFR part 403.

[60 FR 33965, June 29, 1995]

§ 432.37 Effluent limitations guidelines representing the degree of effluent reduction attainable by the application of the best conventional pollutant control technology.

Except as provided in §§ 125.30 through 125.32, any existing point source subject to this subpart shall achieve the following effluent limitations representing the degree of effluent reduction attainable by the application of the best conventional pollutant control technology (BCT): The limitations shall be the same as those specified for conventional pollutants (which are defined in § 401.16) in § 432.32 of this subpart for the best practicable control technology currently available (BPT).

[51 FR 25001, July 9, 1986]

Subpart D—High-Processing Packinghouse Subcategory

§ 432.40 Applicability; description of the high-processing packinghouse subcategory.

The provisions of this subpart are applicable to discharges resulting from the production of red meat carcasses, in whole or part, by high-processing packinghouses.

§ 432.41 Specialized definitions.

For the purpose of this subpart:

(a) Except as provided below, the general definitions, abbreviations and methods of analysis set forth in 40 CFR part 401 shall apply to this subpart.

(b) The term ''packinghouse'' shall mean a plant that both slaughters animals and subsequently processes carcasses into cured, smoked, canned or other prepared meat products.

(c) The term ''high-processing packinghouse'' shall mean a packinghouse which processes both animals slaughtered at the site and additional carcasses from outside sources.

(d) The term ''LWK'' (live weight killed) shall mean the total weight of the total number of animals slaughtered during the time to which the effluent limitations apply; i.e., during any one day or any period of thirty consecutive days.

(e) The term ''ELWK'' (equipment live weight killed) shall mean the total weight of the total number of animals slaughtered at locations other than the slaughterhouse or packinghouse, which animals provide hides, blood, viscera or renderable materials for processing at that slaughterhouse, in addition to those derived from animals slaughtered on-site.

(f) The term ''oil and grease'' shall mean those components of process waste water amenable to measurement by the method described in ''Methods for Chemical Analysis of Water and Wastes,'' 1971, EPA, Analytical Quality Control Laboratory, page 217.

§ 432.42 Effluent limitations guidelines representing the degree of effluent reduction attainable by the application of the best practicable control technology currently available.

Except as provided in §§ 125.30 through 125.32, any existing point source subject to this subpart shall achieve the following effluent limitations representing the degree of effluent reduction attainable by the application of the best practicable control technology currently available (BPT):

(a) The following limitations establish the quantity or quality of pollutants or pollutant properties, controlled by this section and attributable to onsite slaughter or subsequent meat, meat product or byproduct processing of carcasses of animals slaughtered onsite, which may be discharged by a point source subject to the provisions of this subpart after application of the best practicable control technology currently available:

Effluent characteristic	Effluent limitations	
	Maximum for any 1 day	Average of daily values for 30 consecutive days shall not exceed—
	Metric units (kilograms per 1,000 kg LWK)	
BOD5+	0.48	0.24
TSS+	0.62	0.31
Oil and grease	0.26	0.13
Fecal coliform	(1)	(1)
pH	(2)	(2)
	English units (pounds per 1,000 lb LWK)	
BOD5+	0.48	0.24
TSS+	0.62	0.31
Oil and grease	0.26	0.13
Fecal coliform	(1)	(1)
pH	(2)	(2)

[1] Maximum at any time 400 mpn/100 ml.
[2] Within the range 6.0 to 9.0.

+The values for BOD*5* and suspended solids are for average plants, i.e., plants with a ratio of average weight of processed meat products to average LWK of 0.55. Adjustments can be made for high-processing packing-houses at other ratios according to the following equations:

$$\text{kg BOD}5/1000 \text{ kg LWK} = 0.21+0.23 \qquad (v—0.4)$$

$$\text{kg SS}/1000 \text{ kg LWK} = 0.28+0.30 \qquad (v—0.4)$$

where

v – kg processed meat products / kg LWK.

(b) The following limitations establish the quantity or quality of pollutants or pollutant properties, controlled by this section and attributable to the processing (defleshing, washing and curing) of hides derived from animals slaughtered at locations other than the packinghouse, which may be discharged by a point source subject to the provisions of this subpart, in addition to the discharge allowed by paragraph (a) of this section:

Effluent characteristic	Effluent limitations	
	Maximum for any 1 day	Average of daily values for 30 consecutive days shall not exceed—
	Metric units (kilograms per 1,000 kg ELWK)	
BOD*5*	0.04	0.02
TSS	0.08	0.04
	English units (pounds per 1,000 lb ELWK)	
BOD*5*	0.04	0.02
TSS	0.08	0.04

(c) The following limitations establish the quantity or quality of pollutants or pollutant properties, controlled by this section and attributable to the processing of blood derived from animals slaughtered at locations other than the packinghouse, which may be discharged by a point source subject to the provisions of this subpart, in addition to the discharge allowed by paragraph (a) of this section:

Effluent characteristic	Effluent limitations	
	Maximum for any 1 day	Average of daily values for 30 consecutive days shall not exceed—
	Metric units (kilograms per 1,000 kg ELWK)	
BOD*5*	0.04	0.02
TSS	0.08	0.04
	English units (pounds per 1,000 lb ELWK)	
BOD*5*	0.04	0.02
TSS	0.08	0.04

(d) The following limitations establish the quantity or quality of pollutants or pollutant properties, controlled by this section and attributable to the wet or low temperature rendering of material derived from animals slaughtered at locations other than the packinghouse, which may be discharged by a point source subject to the provisions of this subpart, in addition to the discharge allowed by paragraph (a) of this section:

Effluent characteristic	Effluent limitations	
	Maximum for any 1 day	Average of daily values for 30 consecutive days shall not exceed—
	Metric units (kilograms per 1,000 kg ELWK)	
BOD5	0.06	0.03
TSS	0.12	0.06
	English units (pounds per 1,000 lb ELWK)	
BOD5	0.06	0.03
TSS	0.12	0.06

(e) The following limitations establish the quantity or quality of pollutants or pollutant properties, controlled by this section and attributable to the dry rendering of material derived from animals slaughtered at locations other than the packinghouse, which may be discharged by a point source subject to the provisions of this subpart, in addition to the discharge allowed by paragraph (a) of this section:

Effluent characteristic	Effluent limitations	
	Maximum for any 1 day	Average of daily values for 30 consecutive days shall not exceed—
	Metric units (kilograms per 1,000 kg ELWK)	
BOD5	0.02	0.01
TSS	0.04	0.02
	English units (pounds per 1,000 lb ELWK)	
BOD5	0.02	0.01
TSS	0.04	0.02

[39 FR 7897, Feb. 28, 1974, as amended at 60 FR 33965, June 29, 1995]

§ 432.43 [Reserved]

§ 432.44 Pretreatment standards for existing sources.

Any existing source subject to this subpart that introduces process wastewater pollutants into a publicly owned treatment works must comply with 40 CFR part 403. In addition, the following pretreatment standard establishes the quantity or quality of pollutants or pollutant properties controlled by this section which may be discharged to a publicly owned treatment works by a point source subject to the provisions of this subpart.

Pollutant or pollutant property	Pretreatment standard
pH	No limitation.
BOD5	Do.
TSS	Do.
Oil and grease	Do.
Fecal coliform	Do.

[40 FR 6447, Feb. 11, 1975, as amended at 60 FR 33965, June 29, 1995]

§ 432.45 Standards of performance for new sources.

(a) The following standards of performance establish the quantity or quality of pollutants or pollutant properties, controlled by this section and attributable to on-site slaughter or subsequent meat, meat product or byproduct processing or carcasses of animals slaughtered onsite which may be discharged by a new source subject to the provisions of this subpart: The limitations shall be as specified in § 432.42(a), with the exception that in addition to the pollutants or pollutant properties controlled by that subsection, discharges of ammonia shall not exceed the limitations set forth below:

Effluent characteristic	Effluent limitations	
	Maximum for any 1 day	Average of daily values for 30 consecutive days shall not exceed—
	Metric units (kilograms per 1,000 kg LWK)	
Ammonia	0.80	0.40
	English units (pounds per 1,000 lb LWK)	
Ammonia	0.80	0.40

(b) The following standards of performance establish the quantity or quality of pollutants or pollutant properties, controlled by this section and attributable to the processing of blood derived from animals slaughtered at locations other than the packinghouse, which may be discharged by a new source subject to the provisions of this subpart, in addition to the discharge allowed by paragraph (a) of this section and § 432.42(c):

Effluent characteristic	Effluent limitations	
	Maximum for any 1 day	Average of daily values for 30 consecutive days shall not exceed—
	Metric units (kilograms per 1,000 kg ELWK)	
Ammonia	0.06	0.03
	English units (pounds per 1,000 lb ELWK)	
Ammonia	0.06	0.03

(c) The following standards of performance establish the quantity or quality of pollutants or pollutant properties, controlled by this section and attributable to the wet or low temperature rendering of material derived from animals slaughtered at locations other than the packinghouse, which may be discharged by a new source subject to the provisions of this subpart, in addition to the discharge allowed by paragraph (a) of this section and § 423.42(d):

Effluent characteristic	Effluent limitations	
	Maximum for any 1 day	Average of daily values for 30 consecutive days shall not exceed—
	Metric units (kilograms per 1,000 kg ELWK)	
Ammonia	0.10	0.05
	English units (pounds per 1,000 lb ELWK)	
Ammonia	0.10	0.05

(d) The following standards of performance establish the quantity or quality of pollutants or pollutant properties, controlled by this section and attributable to the dry rendering of material derived from animals slaughtered at locations other than the packinghouse, which may be discharged by a new source subject to the provisions of this subpart, in addition to the discharge allowed by paragraph (a) of this section and § 432.42(e):

Effluent characteristic	Effluent limitations	
	Maximum for any 1 day	Average of daily values for 30 consecutive days shall not exceed—
	Metric units (kilograms per 1,000 kg ELWK)	
Ammonia	0.04	0.02
	English units (pounds per 1,000 lb ELWK)	
Ammonia	0.04	0.02

[39 FR 7897, Feb. 28, 1974; 39 FR 26423, July 19, 1974]

§ 432.46 Pretreatment standards for new sources.

Any new source subject to this subpart that introduces process wastewater pollutants into a publicly owned treatment works must comply with 40 CFR part 403.

[60 FR 33965, June 29, 1995]

§ 432.47 Effluent limitations guidelines representing the degree of effluent reduction attainable by the application of the best conventional pollutant control technology.

Except as provided in §§ 125.30 through 125.32, any existing point source subject to this subpart shall achieve the following effluent limitations representing the degree of effluent reduction attainable by the application of the best conventional pollutant control technology (BCT): The limitations shall be the same as those specified for conventional pollutants (which are defined in § 401.16) in § 432.42 of this subpart for the best practicable control technology currently available (BPT).

[51 FR 25001, July 9, 1986]

Subpart E—Small Processor Subcategory

SOURCE: 40 FR 905, Jan. 3, 1975, unless otherwise noted.

§ 432.50 Applicability; description of the small processor subcategory.

The provisions of this subpart are applicable to discharges resulting from

the production of finished meat products such as fresh meat cuts, smoked products, canned products, hams, sausages, luncheon meats, or similar products by a small processor.

§ 432.51 Specialized definitions.

For the purpose of this subpart:

(a) Except as provided below, the general definitions, abbreviations and methods of analysis set forth in 40 CFR part 401 shall apply to this subpart.

(b) The term ''small processor'' shall mean an operation that produces up to 2730 kg (6000 lb) per day of any type or combination of finished products.

(c) The term ''finished product'' shall mean the final manufactured product as fresh meat cuts, hams, bacon or other smoked meats, sausage, luncheon meats, stew, canned meats or related products.

§ 432.52 Effluent limitations guidelines representing the degree of effluent reduction attainable by the application of the best practicable control technology currently available.

Except as provided in §§ 125.30 through 125.32, any existing point source subject to this subpart shall achieve the following effluent limitations representing the degree of effluent reduction attainable by the application of the best practicable control technology currently available (BPT):

Effluent characteristic	Effluent limitations	
	Maximum for any 1 day	Average of daily values for 30 consecutive days shall not exceed—
	Metric units (kg/kkg of finished product)	
BOD5	2.0	1.0
TSS	2.4	1.2
Oil and grease	1.0	0.5
pH	(1)	(1)
Fecal coliforms	(2)	(2)
	English units (lb/1,000 lb of finished product)	
BOD5	2.0	1.0
TSS	2.4	1.2
Oil and grease	1.0	0.5
pH	(1)	(1)
Fecal coliforms	(2)	(2)

[1] Within the range 6.0 to 9.0.
[2] No limitation.

[40 FR 905, Jan. 3, 1975, as amended at 60 FR 33965, June 29, 1995]

§§ 432.53—432.54 [Reserved]

§ 432.55 Standards of performance for new sources.

The following standards of performance establish the quantity or quality of pollutants or pollutant properties, controlled by this section, which may be discharged by a new source subject to the provisions of this subpart:

Effluent characteristic	Effluent limitations	
	Maximum for any 1 day	Average of daily values for 30 consecutive days shall not exceed—
	Metric units (kg/kkg of finished product)	
BOD5	1.0	0.5
TSS	1.2	0.6
Oil and grease	0.5	0.25
pH	(1)	(1)
Fecal coliforms	(2)	(2)
	English units (lb/1,000 lb of finished product)	
BOD5	1.0	0.5
TSS	1.2	0.6
Oil and grease	0.5	0.25
pH	(1)	(1)
Fecal coliforms	(2)	(2)

[1] Within the range 6.0 to 9.0.
[2] No limitation.

§ 432.56 Pretreatment standards for new sources.

Any new source subject to this subpart that introduces process wastewater pollutants into a publicly owned treatment works must comply with 40 CFR part 403. In addition, the following pretreatment standard establishes the quantity or quality of pollutants or pollutant properties controlled by this section which may be discharged to a publicly owned treatment works by a new source subject to the provisions of this subpart:

Pollutant or pollutant property	Pretreatment standard
BOD5	No limitation.
TSS	Do.
Oil and grease	Do.
pH	Do.
Fecal coliform	Do.

[40 FR 905, Jan. 3, 1975, as amended at 60 FR 33965, June 29, 1995]

§ 432.57 Effluent limitations guidelines representing the degree of effluent reduction attainable by the application of the best conventional pollutant control technology.

Except as provided in §§ 125.30 through 125.32, the following limitations establish the quantity or quality of pollutants or pollutant properties, controlled by this section, which may be discharged by a point source subject to the provisions of this subpart after application of the best conventional pollutant control technology:

Effluent characteristic	Effluent limitations	
	Maximum for any 1 day	Average of daily values for 30 consecutive days shall not exceed—
	Metric units (kg/kkg of finished product)	
BOD5	1.0	0.5
TSS	1.2	0.6
Oil and grease	0.5	0.25
pH	(1)	(1)
Fecal coliforms	(2)	(2)
BOD5	1.0	0.5
TSS	1.2	0.6
Oil and grease	0.5	0.25
pH	(1)	(1)
Fecal coliforms	(2)	(2)

[1] Within the range 6.0 to 9.0.
[2] No limitation.

[51 FR 25001, July 9, 1986]

Subpart F—Meat Cutter Subcategory

SOURCE: 40 FR 906, Jan. 3, 1975, unless otherwise noted.

§ 432.60 Applicability; description of the meat cutter subcategory.

The provisions of this subpart are applicable to discharges resulting from the fabrication or manufacture of fresh meat cuts such as steaks, roasts, chops, etc. by a meat cutter.

§ 432.61 Specialized definitions.

For the purpose of this subpart:

(a) Except as provided below, the general definitions, abbreviations and methods of analysis set forth in 40 CFR part 401 shall apply to this subpart.

(b) The term ''meat cutter'' shall mean an operation which fabricates, cuts, or otherwise produces fresh meat cuts and related finished products from livestock carcasses, at rates greater than 2730 kg (6000 lb) per day.

(c) The term ''finished product'' shall mean the final manufactured product as fresh meat cuts including, but not limited to, steaks, roasts, chops, or boneless meats.

§ 432.62 Effluent limitations guidelines representing the degree of effluent reduction attainable by the application of the best practicable control technology currently available.

Except as provided in §§ 125.30 through 125.32, any existing point source subject to this subpart shall achieve the following effluent limitations representing the degree of effluent reduction attainable by the application of the best practicable control technology currently available (BPT):

Effluent characteristic	Effluent limitations	
	Maximum for any 1 day	Average of daily values for 30 consecutive days shall not exceed—
	Metric units (kg/kkg of finished product)	
BOD5	0.036	0.018
TSS	0.044	0.022
Oil and grease	0.012	0.000
pH	(1)	(1)
Fecal coliforms	(2)	(2)
	English units (lb/1,000 lb of finished product)	
BOD5	0.036	0.018
TSS	10.044	0.022
Oil and grease	0.012	0.006
pH	(1)	(1)
Fecal coliforms	(2)	(2)

[1] Within the range 6.0 to 9.0.
[2] Maximum at any time 400 mpn/100 ml.

[40 FR 906, Jan. 3, 1975, as amended at 60 FR 33965, June 29, 1995]

§ 432.63 Effluent limitations guidelines representing the degree of effluent reduction attainable by the application of the best available technology economically achievable.

The following limitations establish the quantity or quality of pollutants or

pollutant properties, controlled by this section, which may be discharged by a point source subject to the provisions of this subpart after application of the best available technology economically achievable:

Effluent characteristic	Effluent limitations	
	Maximum for any 1 day	Average of daily values for 30 consecutive days shall not exceed—
	Milligrams per liter—effluent	
Ammonia	8.0 mg/l	4.0

[44 FR 50748, Aug. 29, 1979]

§ 432.64 [Reserved]

§ 432.65 Standards of performance for new sources.

The following standards of performance establish the quantity or quality of pollutants or pollutant properties, controlled by this section, which may be discharged by a new source subject to the provisions of this subpart:

Effluent characteristic	Effluent limitations	
	Maximum for any 1 day	Average of daily values for 30 consecutive days shall not exceed—
	Metric units (kg/kkg of finished product)	
BOD5	0.036	0.018
TSS	0.044	0.022
Oil and grease	0.012	0.006
pH	(1)	(1)
Fecal coliforms	(2)	(2)
	English units (lb/1,000 lb of finished product)	
BOD5	0.030	0.015
TSS	0.036	0.018
Oil and grease	0.012	0.006
pH	(1)	(1)
Fecal coliforms	(2)	(2)

[1] Within the range 6.0 to 9.0.
[2] Maximum at any time 400 mpn/100 ml.

§ 432.66 Pretreatment standards for new sources.

Any new source subject to this subpart that introduces process wastewater pollutants into a publicly owned treatment works must comply with 40 CFR part 403. In addition, the following pretreatment standard establishes the quantity or quality of pollutants or pollutant properties controlled by this section which may be discharged to a publicly owned treatment works by a new source subject to the provisions of this subpart:

Pollutant or pollutant property	Pretreatment standard
BOD5	No limitation.
TSS	Do.
Oil and grease	Do.
pH	Do.
Fecal coliform	Do.

[40 FR 906, Jan. 3, 1975, as amended at 60 FR 33965, June 29, 1995]

§ 432.67 Effluent limitations guidelines representing the degree of effluent reduction attainable by the application of the best conventional pollutant control technology.

Except as provided in §§ 125.30 through 125.32, any existing point source subject to this subpart shall achieve the following effluent limitations representing the degree of effluent reduction attainable by the application of the best conventional pollutant control technology (BCT): The limitations shall be the same as those specified for conventional pollutants (which are defined in § 401.16) in § 432.62 of this subpart for the best practicable control technology currently available (BPT).

[51 FR 25001, July 9, 1986]

Subpart G—Sausage and Luncheon Meats Processor Subcategory

SOURCE: 40 FR 907, Jan. 3, 1975, unless otherwise noted.

§ 432.70 Applicability; description of the sausage and luncheon meat processor subcategory.

The provisions of this subpart are applicable to discharges resulting from the manufacture of fresh meat cuts, sausage, bologna, and other luncheon meats by a sausage and luncheon meat processor.

§ 432.71 Specialized definitions.

For the purpose of this subpart:

(a) Except as provided below, the general definitions, abbreviations and

methods of analysis set forth in 40 CFR part 401 shall apply to this subpart.

(b) The term ''sausage and luncheon meat processor'' shall mean an operation which cuts fresh meats, grinds, mixes, seasons, smokes or otherwise produces finished products such as sausage, bologna and luncheon meats at rates greater than 2730 kg (6000 lb) per day.

(c) The term ''finished product'' shall mean the final manufactured product as fresh meat cuts including steaks, roasts, chops or boneless meat, bacon or other smoked meats (except hams) such as sausage, bologna or other luncheon meats, or related products (except canned meats).

§ 432.72 Effluent limitations guidelines representing the degree of effluent reduction attainable by the application of the best practicable control technology currently available.

Except as provided in §§ 125.30 through 125.32, any existing point source subject to this subpart shall achieve the following effluent limitations representing the degree of effluent reduction attainable by the application of the best practicable control technology currently available (BPT):

Effluent characteristic	Effluent limitations	
	Maximum for any 1 day	Average of daily values for 30 consecutive days shall not exceed—
	Metric units (kg/kkg of finished product)	
BOD5	0.56	0.28
TSS	0.68	0.34
Oil and grease	0.20	0.10
pH	(1)	(1)
Fecal coliforms	(2)	(2)
	English units (lb/1,000 lb of finished product)	
BOD5	0.56	0.28
TSS	0.68	0.34
Oil and grease	0.20	0.10
pH	(1)	(1)
Fecal coliforms	(2)	(2)

[1] Within the range 6.0 to 9.0.
[2] Maximum at any time 400 mpn/100 ml.

[40 FR 907, Jan. 3, 1975, as amended at 60 FR 33966, June 29, 1995]

§ 432.73 Effluent limitations guidelines representing the degree of effluent reduction attainable by the application of the best available technology economically achievable.

The following limitations establish the quantity or quality of pollutants or pollutant properties, controlled by this section, which may be discharged by a point source subject to the provisions of this subpart after application of the best available technology economically achievable:

[Milligrams per liter—effluent]

Effluent characteristics	Effluent limitations	
	Maximum for any 1 day	Average of daily values for 30 consecutive days shall not exceed—
Ammonia	80 mg/l	4.0

[44 FR 50748, Aug. 29, 1979]

§ 432.74 [Reserved]

§ 432.75 Standards of performance for new sources.

The following standards of performance establish the quantity or quality of pollutants or pollutant properties, controlled by this section, which may be discharged by a new sources subject to the provisions of this subpart:

Effluent characteristic	Effluent limitations	
	Maximum for any 1 day	Average of daily values for 30 consecutive days shall not exceed—
	Metric units (kg/kkg of finished product)	
BOD5	0.56	0.28
TSS	0.68	0.34
Oil and grease	0.20	0.10
pH	(1)	(1)
Fecal coliforms	(2)	(2)
	English units (lb/1,000 lb of finished product)	
BOD5	0.48	0.24
TSS	0.58	0.29
Oil and grease	0.20	0.10
pH	(1)	(1)
Fecal coliforms	(2)	(2)

[1] Within the range 6.0 to 9.0.
[2] Maximum at any time 400 mpn/100 ml.

§ 432.76 Pretreatment standards for new sources.

Any new source subject to this subpart that introduces process wastewater pollutants into a publicly owned treatment works must comply with 40 CFR part 403. In addition, the following pretreatment standard establishes the quantity or quality of pollutants or pollutant properties controlled by this section which may be discharged to a publicly owned treatment works by a new source subject to the provisions of this subpart:

Pollutant or pollutant property	Pretreatment standard
BOD5	No limitation.
TSS	Do.
Oil and grease	Do.
pH	Do.
Fecal coliform	Do.

[40 FR 907, Jan. 3, 1975, as amended at 60 FR 33966, June 29, 1995]

§ 432.77 Effluent limitations guidelines representing the degree of effluent reduction attainable by the application of the best conventional pollutant control technology.

Except as provided in §§ 125.30 through 125.32, any existing point source subject to this subpart shall achieve the following effluent limitations representing the degree of effluent reduction attainable by the application of the best conventional pollutant control technology (BCT): The limitations shall be the same as those specified for conventional pollutants (which are defined in § 401.16) in § 432.72 of this subpart for the best practicable control technology currently available (BPT).

[51 FR 25001, July 9, 1986]

Subpart H—Ham Processor Subcategory

SOURCE: 40 FR 908, Jan. 3, 1975, unless otherwise noted.

§ 432.80 Applicability; description of the ham processor subcategory.

The provisions of this subpart are applicable to discharges resulting from the manufacture of hams alone or in combination with other finished products by a ham processor.

§ 432.81 Specialized definitions.

For the purpose of this subpart:

(a) Except as provided below, the general definitions, abbreviations and methods of analysis set forth in 40 CFR part 401 shall apply to this subpart.

(b) The term ''ham processor'' shall mean an operation which manufactures hams alone or in combination with other finished products at rates greater than 2730 kg (6000 lb) per day.

(c) The term ''finished products'' shall mean the final manufactured product as fresh meat cuts including steaks, roasts, chops or boneless meat, smoked or cured hams, bacon or other smoked meats, sausage, bologna or other luncheon meats (except canned meats).

§ 432.82 Effluent limitations guidelines representing the degree of effluent reduction attainable by the application of the best practicable control technology currently available.

Except as provided in §§ 125.30 through 125.32, any existing point source subject to this subpart shall achieve the following effluent limitations representing the degree of effluent reduction attainable by the application of the best practicable control technology currently available (BPT):

Effluent characteristic	Effluent limitations	
	Maximum for any 1 day	Average of daily values for 30 consecutive days shall not exceed—
	Metric units (kg/kkg of finished product)	
BOD5	0.62	0.31
TSS	0.74	0.37
Oil and grease	0.22	0.11
pH	(1)	(1)
Fecal coliform	(2)	(2)
	English units (lb/1,000 lb of finished product)	
BOD5	0.62	0.31
TSS	0.74	0.37
Oil and grease	0.22	0.11
pH	(1)	(1)
Fecal coliform	(2)	(2)

[1] Within the range 6.0 to 9.0.
[2] Maximum at any time 400 mpn/100 ml.

[40 FR 908, Jan. 3, 1975, as amended at 60 FR 33966, June 29, 1995]

§ 432.83 Effluent limitations guidelines representing the degree of effluent reduction attainable by the application of the best available technology economically achievable.

The following limitations establish the quantity or quality of pollutants or pollutant properties, controlled by this section, which may be discharged by a point source subject to the provisions of this subpart after application of the best available technology economically achievable:

[Milligrams per liter—effluent]

Effluent characteristic	Effluent limitations	
	Maximum for any 1 day	Average of daily values for 30 consecutive days shall not exceed—
Ammonia	8.0 mg/l	4.0

[44 FR 50748, Aug. 29, 1979]

§ 432.84 [Reserved]

§ 432.85 Standards of performance for new sources.

The following standards of performance establish the quantity or quality of pollutants or pollutant properties, controlled by this section, which may be discharged by a new source subject to the provisions of this subpart:

Effluent characteristic	Effluent limitations	
	Maximum for any 1 day	Average of daily values for 30 consecutive days shall not exceed—
	Metric units (kg/kkg of finished product)	
BOD5	0.62	0.31
TSS	0.74	0.37
Oil and grease	0.22	0.11
pH	(1)	(1)
Fecal coliform	(2)	(2)
	English units (lb/1,000 lb of finished product)	
BOD5	0.62	0.31
TSS	0.74	0.37
Oil and grease	0.22	0.11
pH	(1)	(1)
Fecal coliform	(2)	(2)

[1] Within the range 6.0 to 9.0.
[2] Maximum at any time 400 mpn/100 ml.

§ 432.86 Pretreatment standards for new sources.

Any new source subject to this subpart that introduces process wastewater pollutants into a publicly owned treatment works must comply with 40 CFR part 403. In addition, the following pretreatment standard establishes the quantity or quality of pollutants or pollutant properties controlled by this section which may be discharged to a publicly owned treatment works by a new source subject to the provisions of this subpart:

Pollutant or pollutant property	Pretreatment standard
BOD5	No limitation.
TSS	Do.
Oil and grease	Do.
pH	Do.
Fecal coliform	Do.

[40 FR 908, Jan. 3, 1975, as amended at 60 FR 33966, June 29, 1995]

§ 432.87 Effluent limitations guidelines representing the degree of effluent reduction attainable by the application of the best conventional pollutant control technology.

Except as provided in §§ 125.30 through 125.32, any existing point source subject to this subpart shall achieve the following effluent limitations representing the degree of effluent reduction attainable by the application of the best conventional pollutant control technology (BCT): The limitations shall be the same as those specified for conventional pollutants (which are defined in § 401.16) in § 432.82 of this subpart for the best practicable control technology currently available (BPT).

[51 FR 25001, July 9, 1986]

Subpart I—Canned Meats Processor Subcategory

SOURCE: 40 FR 909, Jan. 3, 1975, unless otherwise noted.

§ 432.90 Applicability; description of the canned meats processor subcategory.

The provisions of this subpart are applicable to discharges resulting from the manufacture of canned meats alone

or in combination with any other finished products, by a canned meats processor.

§ 432.91 Specialized definitions.

For the purpose of this subpart:

(a) Except as provided below, the general definitions, abbreviations and methods of analysis set forth in 40 CFR part 401 shall apply to this subpart.

(b) The term ''canned meat processor'' shall mean an operation which prepares and cans meats (such as stew, sandwich spreads, or similar products) alone or in combination with other finished products at rates greater than 2730 kg (6000 lb.) per day.

(c) The term ''finished products'' shall mean the final manufactured product as fresh meat cuts including steaks, roasts, chops or boneless meat, hams, bacon or other smoked meats, sausage, bologna or other luncheon meats, stews, sandwich spreads or other canned meats.

§ 432.92 Effluent limitations guidelines representing the degree of effluent reduction attainable by the application of the best practicable control technology currently available.

Except as provided in §§ 125.30 through 125.32, any existing point source subject to this subpart shall achieve the following effluent limitations representing the degree of effluent reduction attainable by the application of the best practicable control technology currently available (BPT):

Effluent characteristic	Effluent limitations	
	Maximum for any 1 day	Average of daily values for 30 consecutive days shall not exceed—
	Metric units (kg/kkg of finished product)	
BOD5	0.74	0.37
TSS	0.90	0.45
Oil and grease	0.26	0.12
pH	(1)	(1)
Fecal coliform	(2)	(2)
	English units (lb/1,000 lb of finished product)	
BOD5	0.74	0.37
TSS	0.90	0.45
Oil and grease	0.26	0.13
pH	(1)	(1)
Fecal coliform	(2)	(2)

[1] Within the range 6.0 to 9.0.
[2] Maximum at any time 400 mpn/100 ml.

[40 FR 909, Jan. 3, 1975, as amended at 60 FR 33966, June 29, 1995]

§ 432.93 Effluent limitations guidelines representing the degree of effluent reduction attainable by the application of the best available technology economically achievable.

The following limitations establish the quantity or quality of pollutants or pollutant properties, controlled by this section, which may be discharged by a point source subject to the provisions of this subpart after application of the best available technology economically achievable:

[Milligrams per liter—effluent]

Effluent characteristic	Effluent limitations	
	Maximum for any 1 day	Average of daily values for 30 consecutive days shall not exceed—
Ammonia	8.0 mg/l	4.0

[44 FR 50748, Aug. 29, 1979]

§ 432.94 [Reserved]

§ 432.95 Standards of performance for new sources.

The following standards of performance establish the quantity or quality of pollutants or pollutant properties, controlled by this section, which may be discharged by a new source subject to the provisions of this subpart:

Effluent characteristic	Effluent limitations	
	Maximum for any 1 day	Average of daily values for 30 consecutive days shall not exceed—
	Metric units (kg/kkg of finished product)	
BOD5	0.74	0.37
TSS	0.90	0.45
Oil and grease	0.26	0.13
pH	(1)	(1)
Fecal coliform	(2)	(2)
	English units (lb/1,000 lb of finished product)	
BOD5	0.74	0.37
TSS	0.90	0.45
Oil and grease	0.26	0.13
pH	(1)	(1)
Fecal coliform	(2)	(2)

[1] Within the range 6.0 to 9.0.
[2] Maximum at any time 400 mpn/100 ml.

§ 432.96 Pretreatment standards for new sources.

Any new source subject to this subpart that introduces process wastewater pollutants into a publicly owned treatment works must comply with 40 CFR part 403. In addition, the following pretreatment standard establishes the quantity or quality of pollutants or pollutant properties controlled by this section which may be discharged to a publicly owned treatment works by a new source subject to the provisions of this subpart:

Pollutant or pollutant property	Pretreatment standard
BOD5	No limitation.
TSS	Do.
Oil and grease	Do.
pH	Do.
Fecal coliform	Do.

[40 FR 909, Jan. 3, 1975, as amended at 60 FR 33966, June 29, 1995]

§ 432.97 Effluent limitations guidelines representing the degree of effluent reduction attainable by the application of the best conventional pollutant control technology.

Except as provided in §§ 125.30 through 125.32, any existing point source subject to this subpart shall achieve the following effluent limitations representing the degree of effluent reduction attainable by the application of the best conventional pollutant control technology (BCT): The limitations shall be the same as those specified for conventional pollutants (which are defined in § 401.16) in § 432.92 of this subpart for the best practicable control technology currently available (BPT).

[51 FR 25001, July 9, 1986]

Subpart J—Renderer Subcategory

SOURCE: 40 FR 910, Jan. 3, 1975, unless otherwise noted.

§ 432.100 Applicability; description of the renderer subcategory.

The provisions of this subpart are applicable to discharges resulting from the manufacture of meat meal, dried animal by-product residues (tankage), animal oils, grease and tallow, perhaps including hide curing, by a renderer.

§ 432.101 Specialized definitions.

For the purpose of this subpart:

(a) Except as provided below, the general definitions, abbreviations and methods of analysis set forth in 40 CFR part 401 shall apply to this subpart.

(b) The term ''renderer'' shall mean an independent or off-site rendering operation, conducted separate from a slaughterhouse, packinghouse or poultry dressing or processing plant, which manufactures at rates greater than 75,000 pounds of raw material per day of meat meal, tankage, animal fats or oils, grease, and tallow, and may cure cattle hides, but excluding marine oils, fish meal, and fish oils.

(c) The term ''tankage'' shall mean dried animal by-product residues used in feedstuffs.

(d) The term ''tallow'' shall mean a product made from beef cattle or sheep fat that has a melting point of 40 °C or greater.

(e) The term ''raw material'' or as abbreviated herein, ''RM'', shall mean the basic input materials to a renderer composed of animal and poultry trimmings, bones, meat scraps, dead animals, feathers and related usable by-products.

§ 432.102 Effluent limitations guidelines representing the degree of effluent reduction attainable by the application of the best practicable control technology currently available.

(a) Except as provided in §§ 125.30 through 125.32, and subject to the provisions of paragraph (b) of this section, any existing point source subject to this subpart shall achieve the following effluent limitations representing the degree of effluent reduction attainable by the application of the best practicable control technology currently available (BPT):

Effluent characteristic	Effluent limitations	
	Maximum for any 1 day	Average of daily values for 30 consecutive days shall not exceed—
	Metric units (kg/kkg of raw material)	
BOD5	0.34	0.17
TSS	0.42	0.21
Oil and grease	0.20	0.10
pH	(1)	(1)
Fecal coliform	(2)	(2)
	English units (lb/1,000 lb of raw material)	
BOD5	0.34	0.17
TSS	0.42	0.21
Oil and grease	0.20	0.10
pH	(1)	(1)
Fecal coliform	(2)	(2)

[1] Within the range 6.0 to 9.0.
[2] Maximum at any time 400 mpn/100 ml.

(b) The limitations given in paragraph (a) of this section for BOD*5* and TSS are derived for a renderer which does no cattle hide curing as part of the plant activities. If a renderer does conduct hide curing, the following empirical formulas should be used to derive an additive adjustment to the effluent limitations for BOD*5* and TSS.

BOD*5* Adjustment (kg/kkg RM) = [8.0 × (number of hides) / kg of raw material] (lb/1,000 lb RM) = [17.6 × (number of hides) /lbs of raw material]

TSS Adjustment (kg/kkg RM) = [11.0 × (number of hides)/kg of raw material] (lb/1,000 lb RM) = [24.2 × (number of hides)/lbs of raw material]

[40 FR 910, Jan. 3, 1975; 40 FR 11874, Mar. 14, 1975, as amended at 60 FR 33966, June 29, 1995]

§ 432.103 Effluent limitations guidelines representing the degree of effluent reduction attainable by the application of the best available technology economically achievable.

The following limitations establish the quantity or quality of pollutants or pollutant properties, controlled by this section, which may be discharged by a point source subject to the provisions of this subpart after application of the best available technology economically achievable:

Effluent characteristic	Effluent limitations	
	Maximum for any 1 day	Average of daily values for 30 consecutive days shall not exceed—
	Metric units (kg/kkg of raw material)	
Ammonia	0.14	0.07
	English units (lb/1,000 lb of raw material)	
Ammonia	0.14	0.07

[44 FR 50748, Aug. 29, 1979]

§ 432.104 [Reserved]

§ 432.105 Standards of performance for new sources.

(a) Subject to the provisions of paragraph (b) of this section, the following standards of performance establish the quantity or quality of pollutants or pollutant properties, controlled by this section, which may be discharged by a new source subject to the provisions of this subpart:

Effluent characteristics	Effluent limitations	
	Maximum for any 1 day	Average of daily values for 30 consecutive days shall not exceed—
	Metric units (kilograms per 1,000 kg of raw material)	
BOD5	0.18	0.09
TSS	.22	.11
Oil and grease	.10	.05
Ammonia	.14	.07
pH	(1)	(1)
Fecal coliforms	(2)	(2)
	English units (pounds per 1,000 lb of raw material)	
BOD5	0.18	0.09
TSS	.22	.11
Oil and grease	.10	.05
Ammonia	.14	.07
pH	(1)	(1)
Fecal coliforms	(2)	(2)

[1] Within the range 6.0 to 9.0.
[2] Maximum at any time 400 mpn/100 ml.

(b) The standards given in paragraph (a) of this section for BOD*5* and TSS are derived for a renderer which does no cattle hide curing as part of the plant activities. If a renderer does conduct hide curing, the following empirical formulas should be used to derive an additive adjustment to the standards for BOD*5* and TSS.

BOD*5* adjustment (kilograms per 1,000 kg of raw material) = 8.0×(number of hides)/kilograms of raw material (pounds per 1,000 lb of raw material) = 17.6×(number of hides)/pounds of raw material

TSS adjustment (kilograms per 1,000 kg of raw material) = 11.0 × (number of hides)/kilograms of raw material (pounds per 1,000 lb of raw material) = 24.2 × (number of hides)/pounds of raw material

[42 FR 54419, Oct. 6, 1977]

§ 432.106 Pretreatment standards for new sources.

Any new source subject to this subpart that introduces process wastewater pollutants into a publicly owned treatment works must comply with 40 CFR part 403. In addition, the following pretreatment standard establishes the quantity or quality of pollutants or pollutant properties controlled by this section which may be discharged to a publicly owned treatment works by a new source subject to the provisions of this subpart:

Pollutant or pollutant property	Pretreatment standard
BOD5	No limitation.
TSS	Do.
Oil and grease	Do.
pH	Do.
Fecal coliform	Do.

[40 FR 910, Jan. 3, 1975, as amended at 60 FR 33966, June 29, 1995]

§ 432.107 Effluent limitations guidelines representing the degree of effluent reduction attainable by the application of the best conventional pollution control technology.

(a) Except as provided in §§ 125.30 through 125.32, and subject to the provisions of paragraph (b) of this section, the following limitations establish the quantity or quality of pollutants or pollutant properties, controlled by this section, which may be discharged by a point source subject to the provisions of this subpart after application of the best conventional pollutant control technology:

Effluent characteristic	Effluent limitations	
	Maximum for any 1 day	Average of daily values for 30 consecutive days shall not exceed—
	Metric units (kg/kkg of raw material)	
BOD5	0.18	0.09
TSS	0.22	0.11
Oil and grease	0.10	0.05
Fecal coliforms	(1)	(1)
pH	(2)	(2)
BOD5	0.18	0.09
TSS	0.22	0.11
Oil and grease	0.10	0.05
Fecal coliforms	(1)	(1)
pH	(2)	(2)

[1] Maximum at any time: 400 mpn/100 ml.
[2] Within the range 6.0 to 9.0.

(b) The limitations given in paragraph (a) of this section for BOD*5* and TSS are derived for a renderer which does no cattle hide curing as part of the plant activities. If a renderer does conduct hide curing, the following empirical formulas should be used to derive an additive adjustment to the effluent limitations for BOD*5* and TSS.

BOD*5* Adjustment (kg/kkg RM) = 3.6 × (number of hides)/kg of raw material (lb/1,000 lb

RM) = 7.9 × (number of hides)/lbs of raw material

TSS Adjustment (kg/kkg RM)=6.2×(number of hides)/kg of raw material (lb/1,000 lb RM) = 13.6 × (number of hides)/lbs of raw material

[51 FR 25001, July 9, 1986]

PART 433—METAL FINISHING POINT SOURCE CATEGORY

Subpart A—Metal Finishing Subcategory

Sec.
433.10 Applicability; description of the metal finishing point source category.
433.11 Specialized definitions.
433.12 Monitoring requirements.
433.13 Effluent limitations representing the degree of effluent reduction attainable by applying the best practicable control technology currently available (BPT).
433.14 Effluent limitations representing the degree of effluent reduction attainable by applying the best available technology economically achievable (BAT).
433.15 Pretreatment standards for existing sources (PSES).
433.16 New source performance standards (NSPS).
433.17 Pretreatment standards for new sources (PSNS).

AUTHORITY: Secs. 301, 304(b), (c), (e), and (g), 306(b) and (c), 307(b) and (c), 308 and 501 of the Clean Water Act (the Federal Water Pollution Control Act Amendments of 1971, as amended by the Clean Water Act of 1977) (the ''Act''); 33 U.S.C. 1311, 1314(b) (c), (e), and (g), 1316(b) and (c), 1317(b) and (c), 1318 and 1361; 86 Stat. 816, Pub. L. 92–500; 91 Stat. 1567, Pub. L. 95–217.

SOURCE: 48 FR 32485, July 15, 1983, unless otherwise noted.

Subpart A—Metal Finishing Subcategory

§ 433.10 Applicability; description of the metal finishing point source category.

(a) Except as noted in paragraphs (b) and (c), of this section, the provisions of this subpart apply to plants which perform any of the following six metal finishing operations on any basis material: Electroplating, Electroless Plating, Anodizing, Coating (chromating, phosphating, and coloring), Chemical Etching and Milling, and Printed Circuit Board Manufacture. If any of those six operations are present, then this part applies to discharges from those operations and also to discharges from any of the following 40 process operations: Cleaning, Machining, Grinding, Polishing, Tumbling, Burnishing, Impact Deformation, Pressure Deformation, Shearing, Heat Treating, Thermal Cutting, Welding, Brazing, Soldering, Flame Spraying, Sand Blasting, Other Abrasive Jet Machining, Electric Discharge Machining, Electrochemical Machining, Electron Beam Machining, Laser Beam Machining, Plasma Arc Machining, Ultrasonic Machining, Sintering, Laminating, Hot Dip Coating, Sputtering, Vapor Plating, Thermal Infusion, Salt Bath Descaling, Solvent Degreasing, Paint Stripping, Painting, Electrostatic Painting, Electropainting, Vacuum Metalizing, Assembly, Calibration, Testing, and Mechanical Plating.

(b) In some cases effluent limitations and standards for the following industrial categories may be effective and applicable to wastewater discharges from the metal finishing operations listed above. In such cases these part 433 limits shall not apply and the following regulations shall apply:

Nonferrous metal smelting and refining (40 CFR part 421)
Coil coating (40 CFR part 465)
Porcelain enameling (40 CFR part 466)
Battery manufacturing (40 CFR part 461)
Iron and steel (40 CFR part 420)
Metal casting foundries (40 CFR part 464)
Aluminum forming (40 CFR part 467)
Copper forming (40 CFR part 468)
Plastic molding and forming (40 CFR part 463)
Nonferrous forming (40 CFR part 471)
Electrical and electronic components (40 CFR part 469)

(c) This part does not apply to:

(1) Metallic platemaking and gravure cylinder preparation conducted within or for printing and publishing facilities; and

(2) Existing indirect discharging job shops and independent printed circuit board manufacturers which are covered by 40 CFR part 413.)

[48 FR 32485, July 15, 1983; 48 FR 43682, Sept. 26, 1983; 48 FR 45105, Oct. 3, 1983; 51 FR 40421, Nov. 7, 1986]

§ 433.11 Specialized definitions.

The definitions set forth in 40 CFR part 401 and the chemical analysis methods set forth in 40 CFR part 136

are both incorporated here by reference. In addition, the following definitions apply to this part:

(a) The term ''T'', as in ''Cyanide, T'', shall mean total.

(b) The term ''A'', as in ''Cyanide A'', shall mean amenable to alkaline chlorination.

(c) The term ''job shop'' shall mean a facility which owns not more than 50% (annual area basis) of the materials undergoing metal finishing.

(d) The term ''independent'' printed circuit board manufacturer shall mean a facility which manufacturers printed circuit boards principally for sale to other companies.

(e) The term ''TTO'' shall mean total toxic organics, which is the summation of all quantifiable values greater than .01 milligrams per liter for the following toxic organics:

Acenaphthene
Acrolein
Acrylonitrile
Benzene
Benzidine
Carbon tetrachloride (tetrachloromethane)
Chlorobenzene
1,2,4-Trichlorobenzene
Hexachlorobenzene
1,2,-Dichloroethane
1,1,1-Trichloroethane
Hexachloroethane
1,1-Dichloroethane
1,1,2-Trichloroethane
1,1,2,2-Tetrachloroethane
Chloroethane
Bis (2-chloroethyl) ether
2-Chloroethyl vinyl ether (mixed)
2-Chloronaphthalene
2,4,6-Trichlorophenol
Parachlorometa cresol
Chloroform (trichloromethane)
2-Chlorophenol
1,2-Dichlorobenzene
1,3-Dichlorobenzene
1,4-Dichlorobenzene
3,3-Dichlorobenzidine
1,1-Dichloroethylene
1,2-Trans-dichloroethylene
2,4-Dichlorophenol
1,2-Dichloropropane
1,3-Dichloropropylene (1,3-dichloropropene)
2,4-Dimethylphenol
2,4-Dinitrotoluene
2,6-Dinitrotoluene
1,2-Diphenylhydrazine
Ethylbenzene
Fluoranthene
4-Chlorophenyl phenyl ether
4-Bromophenyl phenyl ether
Bis (2-chloroisopropyl) ether
Bis (2-chloroethoxy) methane
Methylene chloride (dichloromethane)
Methyl chloride (chloromethane)
Methyl bromide (bromomethane)
Bromoform (tribromomethane)
Dichlorobromomethane
Chlorodibromomethane
Hexachlorobutadiene
Hexachlorocyclopentadiene
Isophorone
Naphthalene
Nitrobenzene
2-Nitrophenol
4-Nitrophenol
2,4-Dinitrophenol
4,6-Dinitro-o-cresol
N-nitrosodimethylamine
N-nitrosodiphenylamine
N-nitrosodi-n-propylamine
Pentachlorophenol
Phenol
Bis (2-ethylhexyl) phthalate
Butyl benzyl phthalate
Di-n-butyl phthalate
Di-n-octyl phthalate
Diethyl phthalate
Dimethyl phthalate
1,2-Benzanthracene (benzo(a)anthracene)
Benzo(a)pyrene (3,4-benzopyrene)
3,4-Benzofluoranthene (benzo(b)fluoranthene)
11,12-Benzofluoranthene (benzo(k)fluoranthene)
Chrysene
Acenaphthylene
Anthracene
1,12-Benzoperylene (benzo(ghi)perylene)
Fluorene
Phenanthrene
1,2,5,6-Dibenzanthracene (dibenzo(a,h)anthracene)
Indeno(1,2,3-cd) pyrene (2,3-o-phenlene pyrene)
Pyrene
Tetrachloroethylene
Toluene
Trichloroethylene
Vinyl chloride (chloroethylene)
Aldrin
Dieldrin
Chlordane (technical mixture and metabolites)
4,4-DDT
4,4-DDE (p,p-DDX)
4,4-DDD (p,p-TDE)
Alpha-endosulfan
Beta-endosulfan
Endosulfan sulfate
Endrin
Endrin aldehyde
Heptachlor
Heptachlor epoxide
(BHC-hexachloro-cyclohexane)
Alpha-BHC
Beta-BHC
Gamma-BHC
Delta-BHC

(PCB-polychlorinated biphenyls)
PCB-1242 (Arochlor 1242)
PCB-1254 (Arochlor 1254)
PCB-1221 (Arochlor 1221)
PCB-1232 (Arochlor 1232)
PCB-1248 (Arochlor 1248)
PCB-1260 (Arochlor 1260)
PCB-1016 (Arochlor 1016)
Toxaphene
2,3,7,8-Tetrachlorodibenzo-p-dioxin (TCDD)

[48 FR 32485, July 15, 1983; 48 FR 43682, Sept. 26, 1983, as amended at 51 FR 40421, Nov. 7, 1986]

§ 433.12 Monitoring requirements.

(a) In lieu of requiring monitoring for TTO, the permitting authority (or, in the case of indirect dischargers, the control authority) may allow dischargers to make the following certification statement: ''Based on my inquiry of the person or persons directly responsible for managing compliance with the permit limitation [or pretreatment standard] for total toxic organics (TTO), I certify that, to the best of my knowledge and belief, no dumping of concentrated toxic organics into the wastewaters has occurred since filing of the last discharge monitoring report. I further certify that this facility is implementing the toxic organic management plan submitted to the permitting [or control] authority.'' For direct dischargers, this statement is to be included as a ''comment'' on the Discharge Monitoring Report required by 40 CFR 122.44(i), formerly 40 CFR 122.62(i). For indirect dischargers, the statement is to be included as a comment to the periodic reports required by 40 CFR 403.12(e). If monitoring is necessary to measure compliance with the TTO standard, the industrial discharger need analyse for only those pollutants which would reasonably be expected to be present.

(b) In requesting the certification alternative, a discharger shall submit a solvent management plan that specifies to the satisfaction of the permitting authority (or, in the case of indirect dischargers, the control authority) the toxic organic compounds used; the method of disposal used instead of dumping, such as reclamation, contract hauling, or incineration; and procedures for ensuring that toxic organics do not routinely spill or leak into the wastewater. For direct dischargers, the permitting authority shall incorporate the plan as a provision of the permit.

(c) Self-monitoring for cyanide must be conducted after cyanide treatment and before dilution with other streams. Alternatively, samples may be taken of the final effluent, if the plant limitations are adjusted based on the dilution ratio of the cyanide waste stream flow to the effluent flow.

(Approved by the Office of Management and Budget under control number 2040–0074)

[48 FR 32485, July 15, 1983; 48 FR 43682, Sept. 26, 1983, as amended at 49 FR 34823, Sept. 4, 1984]

§ 433.13 Effluent limitations representing the degree of effluent reduction attainable by applying the best practicable control technology currently available (BPT).

(a) Except as provided in 40 CFR 125.30 through 125.32, any existing point source subject to this subpart must achieve the following effluent limitations representing the degree of effluent reduction attainable by applying the best practicable control technology currently available (BPT):

BPT EFFLUENT LIMITATIONS

Pollutant or pollutant property	Maximum for any 1 day	Monthly average shall not exceed
	Milligrams per liter (mg/l)	
Cadmium (T)	0.69	0.26
Chromium (T)	2.77	1.71
Copper (T)	3.38	2.07
Lead (T)	0.69	0.43
Nickel (T)	3.98	2.38
Silver (T)	0.43	0.24
Zinc (T)	2.61	1.48
Cyanide (T)	1.20	0.65
TTO	2.13	.....
Oil & Grease	52	26
TSS	60	31
pH	(1)	(1)

[1] Within 6.0 to 9.0.

(b) Alternatively, for industrial facilities with cyanide treatment, and upon agreement between a source subject to those limits and the pollution control authority, the following amenable cyanide limit may apply in place of the total cyanide limit specified in paragraph (a) of this section:

Pollutant or pollutant property	Maximum for any 1 day	Monthly average shall not exceed
	Milligrams per liter (mg/l)	
Cyanide (A)	0.86	0.32

(c) No user subject to the provisions of this subpart shall augment the use of process wastewater or otherwise dilute the wastewater as a partial or total substitute for adequate treatment to achieve compliance with this limitation.

§ 433.14 Effluent limitations representing the degree of effluent reduction attainable by applying the best available technology economically achievable (BAT).

(a) Except as provided in 40 CFR 125.30 through 125.32, any existing point source subject to this subpart must achieve the following effluent limitations representing the degree of effluent reduction attainable by applying the best available technology economically achievable (BAT):

BAT EFFLUENT LIMITATIONS

Pollutant or pollutant property	Maximum for any 1 day	Monthly average shall not exceed
	Milligrams per liter (mg/l)	
Cadmium (T)	0.69	0.26
Chromium (T)	2.77	1.71
Copper (T)	3.38	2.07
Lead (T)	0.69	0.43
Nickel (T)	3.98	2.38
Silver (T)	0.43	0.24
Zinc (T)	2.61	1.48
Cyanide (T)	1.20	0.65
TTO	2.13	.....

(b) Alternatively, for industrial facilities with cyanide treatment, and upon agreement between a source subject to those limits and the pollution control authority, the following amenable cyanide limit may apply in place of the total cyanide limit specified in paragraph (a) of this section:

Pollutant or pollutant property	Maximum for any 1 day	Monthly average shall not exceed
	Milligrams per liter (mg/l)	
Cyanide (A)	0.86	0.32

(c) No user subject to the provisions of this subpart shall augment the use of process wastewater or otherwise dilute the wastewater as a partial or total substitute for adequate treatment to achieve compliance with this limitation.

§ 433.15 Pretreatment standards for existing sources (PSES).

(a) Except as provided in 40 CFR 403.7 and 403.13, any existing source subject to this subpart that introduces pollutants into a publicly owned treatment works must comply with 40 CFR part 403 and achieve the following pretreatment standards for existing sources (PSES):

PSES FOR ALL PLANTS EXCEPT JOB SHOPS AND INDEPENDENT PRINTED CIRCUIT BOARD MANUFACTURERS

Pollutant or pollutant property	Maximum for any 1 day	Monthly average shall not exceed
	Milligrams per liter (mg/l)	
Cadmium (T)	0.69	0.26
Chromium (T)	2.77	1.71
Copper (T)	3.38	2.07
Lead (T)	0.69	0.43
Nickel (T)	3.98	2.38
Silver (T)	0.43	0.24
Zinc (T)	2.61	1.48
Cyanide (T)	1.20	0.65
TTO	2.13	.....

(b) Alternatively, for industrial facilities with cyanide treatment, upon agreement between a source subject to those limits and the pollution control authority. The following amenable cyanide limit may apply in place of the total cyanide limit specified in paragraph (a) of this section:

Pollutant or pollutant property	Maximum for any 1 day	Monthly average shall not exceed
	Milligrams per liter (mg/l)	
Cyanide (A)	0.86	0.32

(c) No user introducing wastewater pollutants into a publicly owned treatment works under the provisions of this subpart shall augment the use of process wastewater as a partial or total substitute for adequate treatment to achieve compliance with this standard.

(d) An existing source submitting a certification in lieu of monitoring pursuant to § 433.12 (a) and (b) of this regulation must implement the toxic organic management plan approved by the control authority.

(e) An existing source subject to this subpart shall comply with a daily maximum pretreatment standard for TTO of 4.57 mg/l.

(f) Compliance with the provisions of paragraph (c), (d), and (e) of this section shall be achieved as soon as possible, but not later than June 30, 1984, however metal finishing facilities which are also covered by part 420 (iron and steel) need not comply before July 10, 1985. Compliance with the provisions of paragraphs (a) and (b) of this section shall be achieved as soon as possible, but not later than February 15, 1986.

[48 FR 32485, July 15, 1983, as amended at 48 FR 41410, Sept. 15, 1983; 48 FR 43682, Sept. 26, 1983]

§ 433.16 New source performance standards (NSPS).

(a) Any new source subject to this subpart must achieve the following performance standards:

NSPS

Pollutant or pollutant property	Maximum for any 1 day	Monthly average shall not exceed
	Milligrams per liter (mg/l)	
Cadmium (T)	0.11	0.07
Chromium (T)	2.77	1.71
Copper (T)	3.38	2.07
Lead (T)	0.69	0.43
Nickel (T)	3.98	2.38
Silver (T)	0.43	0.24
Zinc (T)	2.61	1.48
Cyanide (T)	1.20	0.65
TTO	2.13	.....
Oil and Grease	52	26
TSS	60	31
pH	(1)	(1)

[1] Within 6.0 to 9.0.

(b) Alternatively, for industrial facilities with cyanide treatment, and upon agreement between a source subject to those limits and the pollution control authority, the following amenable cyanide limit may apply in place of the total cyanide limit specified in paragraph (a) of this section:

Pollutant or pollutant property	Maximum for any 1 day	Monthly average shall not exceed
	Milligrams per liter (mg/l)	
Cyanide (A)	0.86	0.32

(c) No user subject to the provisions of this subpart shall augment the use of process wastewater or otherwise dilute the wastewater as a partial or total substitute for adequate treatment to achieve compliance with this limitation.

[48 FR 32485, July 15, 1983; 48 FR 43682, Sept. 26, 1983]

§ 433.17 Pretreatment standards for new sources (PSNS).

(a) Except as provided in 40 CFR 403.7, any new source subject to this subpart that introduces pollutants into a publicly owned treatment works must comply with 40 CFR part 403 and achieve the following pretreatment standards for new sources (PSNS):

PSNS

Pollutant or pollutant property	Maximum for any 1 day	Monthly average shall not exceed
	Milligrams per liter (mg/l)	
Cadmium (T)	0.11	0.07
Chromium (T)	2.77	1.71
Copper (T)	3.38	2.07
Lead (T)	0.69	0.43
Nickel (T)	3.98	2.38
Silver (T)	0.43	0.24
Zinc (T)	2.61	1.48
Cyanide (T)	1.20	0.65
TTO	2.13	.....

(b) Alternatively, for industrial facilities with cyanide treatment, and upon agreement between a source subject to these limits and the pollution control authority, the following amenable cyanide limit may apply in place of the total cyanide limit specified in paragraph (a) of this section:

Pollutant or pollutant property	Maximum for any 1 day	Monthly average shall not exceed
	Milligrams per liter (mg/l)	
Cyanide (A)	0.86	0.32

(c) No user subject to the provisions of this subpart shall augment the use

of process wastewater or otherwise dilute the wastewater as a partial or total substitute for adequate treatment to achieve compliance with this limitation.

(d) An existing source submitting a certification in lieu of monitoring pursuant to §433.12 (a) and (b) of this regulation must implement the toxic organic management plan approved by the control authority.

[48 FR 32485, July 15, 1983; 48 FR 43682, Sept. 26, 1983]

PART 434—COAL MINING POINT SOURCE CATEGORY BPT, BAT, BCT LIMITATIONS AND NEW SOURCE PERFORMANCE STANDARDS

Subpart A—General Provisions

Sec.

434.10 Applicability.
434.11 General definitions.

Subpart B—Coal Preparation Plants and Coal Preparation Plant Associated Areas

434.20 Applicability.
434.21 [Reserved]
434.22 Effluent limitations guidelines representing the degree of effluent reduction attainable by the application of the best practicable control technology currently available (BPT).
434.23 Effluent limitations guidelines representing the degree of effluent reduction attainable by the application of the best available technology economically achievable (BAT).
434.24 Effluent limitations guidelines representing the degree of effluent reduction attainable by the application of the best conventional pollutant control technology (BCT). [Reserved]
434.25 New source performance standard (NSPS).

Subpart C—Acid or Ferruginous Mine Drainage

434.30 Applicability; description of the acid or ferruginous mine drainage subcategory.
434.31 [Reserved]
434.32 Effluent limitations guidelines representing the degree of effluent reduction attainable by the application of the best practicable control technology currently available (BPT).
434.33 Effluent limitations guidelines representing the degree of effluent reduction attainable by the application of the best available technology economically achievable (BAT).
434.34 Effluent limitations guidelines representing the degree of effluent reduction attainable by the application of the best conventional pollutant control technology (BCT). [Reserved]
434.35 New source performance standards (NSPS).

Subpart D—Alkaline Mine Drainage

434.40 Applicability; description of the alkaline mine drainage subcategory
434.41 [Reserved]
434.42 Effluent limitations guidelines representing the degree of effluent reduction attainable by the application of the best practicable control technology currently available (BPT).
434.43 Effluent limitations guidelines representing the degree of effluent reduction attainable by the application of the best available technology economically achievable (BAT).
434.44 Effluent limitations guidelines representing the degree of effluent reduction attainable by the application of the best conventional pollutant control technology (BCT). [Reserved]
434.45 New source performance standards (NSPS).

Subpart E—Post-Mining Areas

434.50 Applicability.
434.51 [Reserved]
434.52 Effluent limitations guidelines representing the degree of effluent reduction attainable by the application of the best practicable control technology currently available (BPT).
434.53 Effluent limitations guidelines representing the degree of effluent reduction attainable by the application of the best available technology economically achievable (BAT).
434.54 Effluent limitations guidelines representing the degree of effluent reduction attainable by the application of the best conventional pollutant control technology (BCT). [Reserved]
434.55 New source performance standards (NSPS).

Subpart F—Miscellaneous Provisions

434.60 Applicability.
434.61 Commingling of waste streams.
434.62 Alternate effluent limitations for pH.
434.63 Effluent limitations for precipitation events.
434.64 Procedure and method detection limit for measurement of settleable solids.
434.65 Modifications of NPDES Permits for New Sources.

Subpart G—Coal Remining

434.70 Specialized definitions.
434.71 Applicability.
434.72 Effluent limitations attainable by the application of the best practicable control technology currently available (BPT).
434.73 Effluent limitations attainable by application of the best available technology economically achievable (BAT).
434.74 Effluent limitations attainable by application of the best conventional pollutant control technology (BCT).
434.75 New source performance standards (NSPS).

Subpart H—Western Alkaline Coal Mining

434.80 Specialized definitions.
434.81 Applicability.
434.82 Effluent limitations attainable by the application of the best practicable control technology currently available (BPT).
434.83 Effluent limitations attainable by application of the best available technology economically achievable (BAT).
434.84 Effluent limitations attainable by application of the best conventional pollutant control technology (BCT). [Reserved]
434.85 New source performance standards (NSPS).

APPENDIX A TO PART 434—ALTERNATE STORM LIMITATIONS FOR ACID OR FERRUGINOUS MINE DRAINAGE

APPENDIX B TO PART 434—BASELINE DETERMINATION AND COMPLIANCE MONITORING FOR PRE-EXISTING DISCHARGES AT REMINING OPERATIONS

AUTHORITY: 33 U.S.C. 1311 1314(b), (c), (e), and (g), 1316(b) and (c), 1317(b) and (c), and 1361.

SOURCE: 50 FR 41305, Oct. 9, 1985, unless otherwise noted.

Subpart A—General Provisions

§ 434.10 Applicability.

This part applies to discharges from any coal mine at which the extraction of coal is taking place or is planned to be undertaken and to coal preparation plants and associated areas.

§ 434.11 General definitions.

(a) The term ''acid or ferruginous mine drainage'' means mine drainage which, before any treatment, either has a pH of less than 6.0 or a total iron concentration equal to or greater than 10 mg/l.

(b) The term ''active mining area'' means the area, on and beneath land, used or disturbed in activity related to the extraction, removal, or recovery of coal from its natural deposits. This term excludes coal preparation plants, coal preparation plant associated areas and post-mining areas.

(c) The term ''alkaline, mine drainage'' means mine drainage which, before any treatment, has a pH equal to or greater than 6.0 and total iron concentration of less than 10 mg/l.

(d) The term ''bond release'' means the time at which the appropriate regulatory authority returns a reclamation or performance bond based upon its determination that reclamation work (including, in the case of underground mines, mine sealing and abandonment procedures) has been satisfactorily completed.

(e) The term ''coal preparation plant'' means a facility where coal is subjected to cleaning, concentrating, or other processing or preparation in order to separate coal from its impurities and then is loaded for transit to a consuming facility.

(f) The term ''coal preparation plant associated areas'' means the coal preparation plant yards, immediate access roads, coal refuse piles and coal storage piles and facilities.

(g) The term ''coal preparation plant water circuit'' means all pipes, channels, basins, tanks, and all other structures and equipment that convey, contain, treat, or process any water that is used is coal preparation processes within a coal preparation plant.

(h) The term ''mine drainage'' means any drainage, and any water pumped or siphoned, from an active mining area or a post-mining area.

(i) The abbreviation ''ml/l'' means milliliters per liter.

(j)(1) Notwithstanding any other provision of this Chapter, subject to paragraph (j)(2) of this section the term ''new source coal mine'' means a coal mine (excluding coal preparation plants and coal preparation plant associated areas) including an abandoned mine which is being re-mined.

(i) The construction of which is commenced after May 4, 1984; or

(ii) Which is determined by the EPA Regional Administrator to constitute a

''major alteration''. In making this determination, the Regional Administrator shall take into account whether one or more of the following events resulting in a new, altered or increased discharge of pollutants has occurred after May 4, 1984 in connection with the mine for which the NPDES permit is being considered:

(A) Extraction of a coal seam not previously extracted by that mine;

(B) Discharge into a drainage area not previously affected by wastewater discharge from the mine;

(C) Extensive new surface disruption at the mining operation;

(D) A construction of a new shaft, slope, or drift; and

(E) Such other factors as the Regional Administrator deems relevant.

(2) No provision in this part shall be deemed to affect the classification as a new source of a facility which was classified as a new source coal mine under previous EPA regulations, but would not be classified as a new source under this section, as modified. Nor shall any provision in this part be deemed to affect the standards applicable to such facilities, except as provided in § 434.65 of this chapter.

(k) The term ''post-mining area'' means:

(1) A reclamation area or

(2) The underground workings of an underground coal mine after the extraction, removal, or recovery of coal from its natural deposit has ceased and prior to bond release.

(l) The term ''reclamation area'' means the surface area of a coal mine which has been returned to required contour and on which revegetation (specifically, seeding or planting) work has commenced.

(m) The term ''settleable solids'' is that matter measured by the volumetric method specified in § 434.64.

(n) The terms ''1-year, 2-year, and 10-year, 24-hour precipitation events'' means the maximum 24-hour precipitation event with a probable recurrence interval of once in one, two, and ten years respectively as defined by the National Weather Service and Technical Paper No. 40, ''Rainfall Frequency Altas of the U.S.,'' May 1961, or equivalent regional or rainfall probability information developed therefrom.

(o) The terms ''treatment facility'' and ''treatment system'' mean all structures which contain, convey, and as necessay, chemically or physically treat coal rine drainage, coal preparation plant process wastewater, or drainage from coal preparation plant associated areas, which remove pollutants regulated by this part from such waters. This includes all pipes, channels, ponds, basins, tanks and all other equipment serving such structures.

(p) The term ''coal refuse disposal pile'' means any coal refuse deposited on the earth and intended as permanent dispoal or long-term storage (greater than 180 days) of such material, but does not include coal refuse deposited within the active mining area or coal refuse never removed from the active mining area.

(q) The term ''controlled surface mine drainage'' means any surface mine drainage that is pumped or siphoned from the active mining area.

(r) The term ''abandoned mine'' means a mine where mining operations have occurred in the past and

(1) The applicable reclamation bond or financial assurance has been released or forfeited or

(2) If no reclamation bond or other financial assurance has been posted, no mining operations have occurred for five years or more.

(s) The term ''1-year, 24-hour precipitation event'' means the maximum 24-hour precipitation event with a probable recurrence interval of once in one year as defined by the National Weather Service and Technical Paper No. 40, ''Rainfall Frequency Atlas of the U.S.,'' May 1961, or equivalent regional or rainfall probability information developed therefrom.

(t) The Term ''2-year, 24-hour precipitation event'' means the maximum 24-hour precipitation event with a probable recurrence interval of once in two years as defined by the National Weather Service and Technical Paper No. 40, ''Rainfall Frequency Atlas of the U.S., ''May 1961, or equivalent regional or rainfall probability information developed therefrom.

Subpart B—Coal Preparation Plants and Coal Preparation Plant Associated Areas

§ 434.20 Applicability.

The provisions of this subpart are applicable to discharges from coal preparation plants and coal preparation plant association areas, as indicated, including discharges which are pumped, siphoned, or drained from the coal preparation plant water circuit and coal storage, refuse storage, and ancillary areas related to the cleaning or beneficiation of coal of any rank including, but not limited to, bituminous, lignite, and anthracite.

§ 434.21 [Reserved]

§ 434.22 Effluent limitation guidelines representing the degree of effluent reduction attainable by the application of the best practicable control technology currently available (BPT).

(a) Except as provided in 40 CFR 125.30–125.32, 40 CFR 401.17, and §§ 434.61, 434.62 and 434.63 of this part, the following limitations establish the concentration or quality of pollutants which may be discharged by any existing coal preparation plant and coal preparation plant associated areas subject to the provisions of this subpart after application of the best practicable control technology currently available if discharges from such point sources normally exhibit a pH of less than 6.0 prior to treatment:

BPT EFFLUENT LIMITATIONS

Pollutant or pollutant property	Maximum for any 1 day	Average of daily values for 30 consecutive days
	Concentration in mg/l	
Iron, total	7.0	3.5
Manganese, total	4.0	2.0
TSS	70	35
pH	[1]	[1]

[1] Within the range of 6.0 to 9.0 at all times.

(b) Except as provided in 40 CFR 125.30–125.32, 40 CFR 401.17 and §§ 434.61 and 434.63 of this part, the following limitations establish the concentration or quality of pollutants which may be discharged by any existing coal preparation plant and coal preparation plant associated areas subject to the provisions of this subpart after application of the best practicable control technology currently available if discharges from such point sources normally exhibit a pH equal to or greater than 6.0 prior to treatment:

BPT EFFLUENT LIMITATIONS

Pollutant or pollutant property	Maximum for any 1 day	Average of daily values for 30 consecutive days
	Concentration in mg/l	
Iron, total	7.0	3.5
TSS	70	35
pH	[1]	[1]

[1] Within the range of 6.0 to 9.0 at all times.

§ 434.23 Effluent limitations guidelines representing the degree of effluent reduction attainable by application of the best available technology economically achievable (BAT).

(a) Except as provided in 40 CFR 125.30–125.32, and §§ 434.61, 434.62 and 434.63 of this part, the following limitations establish the concentration or quality of pollutants which may be discharged by any existing coal preparation plant and coal preparation plant associated areas subject to the provisions of this subpart after application of the best available technology economically achievable if discharges from such point sources normally exhibit a pH of less than 6.0 prior to treatment:

BAT EFFLUENT LIMITATIONS

Pollutant or pollutant property	Maximum for any 1 day	Average of daily values for 30 consecutive days
	Concentration in mg/l	
Iron, total	7.0	3.5
Manganese, total	4.0	2.0

(b) Except as provided in 40 CFR 125.30–125.32, and §§ 434.61 and 434.63 of this part, the following limitations establish the concentration or quality of pollutants which may be discharged by any existing coal preparation plant and coal preparation plant associated areas

subject to the provisions of this subpart after application of the best available technology economically achievable if discharges from such point sources normally exhibit a pH equal to or greater than 6.0 prior to treatment:

BAT EFFLUENT LIMITATIONS

Pollutant or pollutant property	Maximum for any 1 day	Average of daily values for 30 consecutive days
	Concentration in mg/l	
Iron, total	7.0	3.5

§ 434.24 Effluent limitations guidelines representing the degree of effluent reduction attainable by the application of the best conventional pollutant control technology (BCT). [Reserved]

§ 434.25 New source performance standards (NSPS).

The following new source performance standards (NSPS) shall be achieved by any new source coal preparation plant and coal preparation plant associated areas, as indicated:

(a) Except as provided in 40 CFR 401.17 and §§ 434.61, 434.62 and 434.63 of this part, the following new source performance standards shall apply to discharges from new source coal preparation plants and new source coal preparation plant associated areas, if such discharges normally exhibit a pH of less than 6.0 prior to treatment:

NSPS EFFLUENT LIMITATIONS (MG/L)

Pollutant or pollutant property	Maximum for any 1 day	Average of daily values for 30 consecutive days
Iron, total	6.0	3.0
Manganese, total	4.0	2.0
TSS	70	35
pH	(1)	(1)

[1] 6.0–9.0 at all times.

(b) Except as provided in 40 CFR 401.17 and §§ 434.61, 434.62 and 434.63 of this part, the following new source performance standards shall apply to discharges from new source coal preparation plants and new source coal preparation plant associated areas, if such discharges normally exhibit a pH equal to or greater than 6.0 prior to treatment:

NSPS EFFLUENT LIMITATIONS (MG/L)

Pollutant or pollutant property	Maximum for any 1 day	Average of daily values for 30 consecutive days
Iron, total	6.0	3.0
TSS	70	35
pH	(1)	(1)

[1] 6.0–9.0 at all times.

Subpart C—Acid or Ferruginous Mine Drainage

§ 434.30 Applicability; description of the acid or ferruginous mine drainage subcategory.

The provisions of this subpart are applicable to acid or ferruginous mine drainage from an active mining area resulting from the mining of coal of any rank including, but not limited to, bituminous, lignite, and anthracite.

§ 434.31 [Reserved]

§ 434.32 Effluent limitations guidelines representing the degree of effluent reduction attainable by the application of the best practicable control technology currently available (BPT).

Except as provided in 40 CFR 125.30–125.32, 40 CFR 401.17, and §§ 434.61, 434.62 and 434.63 of this part, the following limitations establish the concentration or quality of pollutants which may be discharged by a point source subject to the provisions of this subpart after application of the best practicable control technology currently available:

BPT EFFLUENT LIMITATIONS

Pollutant or pollutant property	Maximum for any 1 day	Average of daily values for 30 consecutive days
	Concentration in mg/l	
Iron, total	7.0	3.5
Manganese, total	4.0	2.0
TSS	70.0	35.0
pH	(1)	(1)

[1] Within the range 6.0 to 9.0 at all times.

§ 434.33 Effluent limitations guidelines representing the degree of effluent reduction attainable by the application of the best available technology economically achievable (BAT).

Except as provided in 40 CFR 125.30–125.32, 40 CFR 401.17, and §§ 434.61, 434.62 and 434.63 of this part, the following limitations establish the concentration or quality of pollutants which may be discharged by a point source subject to the provisions of this subpart after application of the best available technology economically achievable:

BPT EFFLUENT LIMITATIONS

Pollutant or pollutant property	Maximum for any 1 day	Average of daily values for 30 consecutive days
	Concentration in mg/l	
Iron, total	7.0	3.5
Manganese, total	4.0	2.0

§ 434.34 Effluent limitations guidelines representing the degree of effluent reduction attainable by the application of the best conventional pollutant control technology (BCT). [Reserved]

§ 434.35 New source performance standards (NSPS).

Except as provided in 40 CFR 401.17, and §§ 434.61, 434.62 and 434.63 of this part, the following new source performance standards shall be achieved for any discharge from a new source subject to this subpart:

NSPS EFFLUENT LIMITATIONS

Pollutant or pollutant property	Maximum for any 1 day	Average of daily values for 30 consecutive days
	Concentration in mg/l	
Iron, total	6.0	3.0
Manganese, total	4.0	2.0
TSS	70.0	35.0
pH	(1)	(1)

[1] Within the range 6.0 to 9.0 at all times.

Subpart D—Alkaline Mine Drainage

§ 434.40 Applicability; description of the alkaline mine drainage subcategory.

The provisions of this subpart are applicable to alkaline mine drainage from an active mining area resulting from the mining of coal of any rank including, but not limited to, bituminous, lignite, and anthracite.

§ 434.41 [Reserved]

§ 434.42 Effluent limitations guidelines representing the degree of effluent reduction attainable by the application of the best practicable control technology currently available (BPT).

Except as provided in 40 CFR 125.30–125.32, 40 CFR 401.17, and §§ 434.61 and 434.63 of this part, the following limitations establish the concentration or quality of pollutants which may be discharged by a point source subject to the provisions of this subpart after application of the best practicable control technology currently available:

BPT EFFLUENT LIMITATIONS

Pollutant or pollutant property	Maximum for any 1 day	Average of daily values for 30 consecutive days
	Concentration in mg/l	
Iron, total	7.0	3.5
TSS	70.	35.
pH	(1)	(1)

[1] Within the range 6.0 to 9.0 at all times.

§ 434.43 Effluent limitations guidelines representing the degree of effluent reduction attainable by application of the best available technology economically achievable (BAT).

Except as provided in 40 CFR 125.30–125.32, and §§ 434.61 and 434.63 of this part, the following limitations establish the concentration or quality of pollutants which may be discharged by a point source subject to the provisions of this subpart after application of the best available technology economically achievable:

BAT EFFLUENT LIMITATIONS

Pollutant or pollutant property	Maximum for any 1 day	Average of daily values for 30 consecutive days
	Concentration in mg/l	
Iron, total	7.0	3.5

§ 434.44 Effluent limitations guidelines representing the degree of effluent reduction attainable by the application of the best conventional pollutant control technology (BCT). [Reserved]

§ 434.45 New source performance standards (NSPS).

Except as provided in 40 CFR 401.17 and §§ 434.61 and 434.63 of this part, the following new source performance standards shall be achieved for any discharge from a new source subject to this subpart:

NSPS EFFLUENT LIMITATIONS

Pollutant or pollutant property	Maximum for any 1 day	Average of daily values for 30 consecutive days
	Concentration in mg/l	
Iron, total	6.0	3.0
TSS	70.0	35.0
pH	(1)	(1)

[1] Within the range 6.0 to 9.0 at all times.

Subpart E—Post-Mining Areas

§ 434.50 Applicability.

The provisions of this subpart are applicable to discharges from post-mining areas, except as provided in subpart H—Western Alkaline Coal Mining of this part.

[67 FR 3406, Jan. 23, 2002]

§ 434.51 [Reserved]

§ 434.52 Effluent limitations quidelines representing the degree of effluent reduction attainable by the application of the best practicable control technology currently available (BPT).

(a) *Reclamation areas.* The limitations in this subsection apply to discharges from reclamation areas until the performance bond issued to the facility by the appropriate SMCRA authority has been released.

Except as provided in 40 CFR 125.30–125.32, 40 CFR 401.17 and §§ 434.61 and 434.63(d)(2) of this part, the following limitations establish the concentration or quality of pollutants which may be discharged by a point source subject to the provisions of this subsection after application of the best practicable control technology currently available:

BPT EFFLUENT LIMITATIONS

Pollutant or pollutant property	Limitations
Settleable Solids	0.5 ml/l maximum not to be exceeded.
pH	(1)

[1] Within the range 6.0 to 9.0 at all times.

(b) *Underground mine drainage.* The limitations in this subsection apply to discharges from the underground workings of underground mines until SMCRA bond release.

(1) Except as provided in 40 CFR 125.30–125.32, 40 CFR 401.17 and §§ 434.61, 434.62 and 434.63 of this part, the following limitations establish the concentration of quality of pollutants in acid or ferruginous mine drainage subject to the provisions of this subsection after application of the best practicable control technology currently available:

BPT EFFLUENT LIMITATIONS

Pollutant or pollutant property	Maximum for any 1 day	Average of daily values for 30 consecutive days
	Concentration in mg/l	
Iron, total	7.0	3.5
Manganese, total	4.0	2.0
TSS	70.0	35.0
pH	(1)	(1)

[1] Within the range 6.0 to 9.0 at all times.

(2) Except as provided in 40 CFR 125.30–125.32, 40 CFR 401.17, and §§ 434.61 and 434.63 of this part, the following limitations establish the concentration or quality of pollutants in alkaline mine drainage subject to the provisions of this subsection after application of the best practicable control technology currently available:

BPT EFFLUENT LIMITATIONS

Pollutant or pollutant property	Maximum for any 1 day	Average of daily values for 30 consecutive days
	Concentration in mg/l	
Iron, total	7.0	3.5
TSS	70.0	35.0
pH	(1)	(1)

[1] Within the range 6.0 to 9.0 at all times.

§ 434.53 Effluent limitations guidelines representing the degree of effluent reduction attainable by application of the best available technology economically achievable (BAT).

(a) *Reclamation areas.* The limitations of this subsection apply to discharges from reclamation areas until SMCRA bond release.

Except as provided in 40 CFR 125.30–125.32, and §§ 434.61 and 434.63(d)(2) of this part, the following limitations establish the concentration or quality of pollutants which may be discharged by a point source subject to the provisions of this subsection after application of the best available technology economically achievable:

BAT EFFLUENT LIMITATIONS

Pollutant or pollutant property	Limitations
Settleable solids	0.5 ml/l maximum not to be exceeded.

(b) *Underground mine drainage.* The limitations in this subsection apply to discharges from the underground workings of underground mines until SMCRA bond release.

(1) Except as provided in 40 CFR 125.30–125.32, and §§ 434.61, 434.62, and 434.63 of this part, the following limitations establish the concentration or quality of pollutants in acid or ferruginous mine drainage subject to the provisions of this subsection after application of the best available technology economically achievable:

BAT EFFLUENT LIMITATIONS

Pollutant or pollutant property	Maximum for any 1 day	Average of daily values for 30 consecutive days
	Concentration in mg/l	
Iron, total	7.0	3.5
Manganese, total	4.0	2.0

(2) Except as provided in 40 CFR 125.30–125.32, and §§ 434.61, and 434.63 of this part, the following limitations establish the concentration or quality of pollutants in alkaline mine drainage subject to the provisions of this subsection after application of the best available technology economically achievable:

BAT EFFLUENT LIMITATIONS

Pollutant or pollutant property	Maximum for any 1 day	Average of daily values for 30 consecutive days
	Concentration in mg/l	
Iron, total	7.0	3.5

§ 434.54 Effluent limitations guidelines representing the degree of effluent reduction attainable by the application of the best conventional pollutant control technology (BCT). [Reserved]

§ 434.55 New source performance standards (NSPS).

The following new source performance standards shall apply to the post-mining areas of all new source coal mines:

(a) *Reclamation areas.* The standards of this subsection apply to discharges from reclamation areas at new source coal mines until SMCRA bond release.

Except as provided in 40 CFR 401.17 and §§ 434.61 and 434.63 (d)(2) of this part, the following new source performance standards shall be achieved for a discharge subject to the provisions of this subsection:

NSPS EFFLUENT LIMITATIONS

Pollutant or pollutant property	Limitations
Settleable Solids	0.5 ml/1 maximum not to be exceeded.
pH	(1)

(1) Within the range 6.0 to 9.0 at all times.

(b) *Underground mine drainage.* The standards in this subsection apply to discharges from the underground workings of new source underground mines until bond release.

(1) Except as provided in 40 CFR 401.17 and §§ 434.61, 434.62, and 434.63 of this part, the following new source performance standards shall be achieved for the discharge of any acid or ferruginous mine drainage subject to this subsection:

NSPS EFFLUENT LIMITATIONS

Pollutant or pollutant property	Maximum for any 1 day	Average of daily values for 30 consecutive days
	Concentrations in mg/1	
Iron, total	6.0	3.0
Manganese, total	4.0	2.0
TSS	70.0	35.0
pH	(1)	(1)

1 Within the range 6.0 to 9.0 at all times.

(2) Except as provided in 40 CFR 401.17 and §§ 434.61 and 434.63 of this part, the following new source performance standards shall be achieved for the discharge of any alkaline mine drainage subject to this subsection:

NSPS EFFLUENT LIMITATIONS

Pollutant or pollutant property	Maximum for any 1 day	Average of daily values for 30 consecutive days
	Concentrations in mg/1	
Iron, total	6.0	3.0
TSS	70.0	35.0
pH	(1)	(1)

1 Within the range 6.0 to 9.0 at all times.

Subpart F—Miscellaneous Provisions

§ 434.60 Applicability.

The provisions of this subpart F apply to this part 434 as specified in subparts B, C, D, E and G of this part.

[67 FR 3406, Jan. 23, 2002]

§ 434.61 Commingling of waste streams.

Where waste streams from any facility covered by this part are combined for treatment or discharge with waste streams from another facility covered by this part, the concentration of each pollutant in the combined discharge may not exceed the most stringent limitations for that pollutant applicable to any component waste stream of the discharge.

§ 434.62 Alternate effluent limitation for pH.

Where the application of neutralization and sedimentation treatment technology results in inability to comply with the otherwise applicable manganese limitations, the permit issuer may allow the pH level in the final effluent to exceed 9.0 to a small extent in order that the manganese limitations can be achieved.

§ 434.63 Effluent limitations for precipitation events.

(a)(1) The alternate limitations specified in paragraph (a)(2) of this section apply with respect to:

(i) All discharges of alkaline mine drainage except discharges from underground workings of underground mines that are not commingled with other discharges eligible for these alternate limitations;

(ii) All discharges from steep slope areas, (as defined in section 515(d)(4) of the Surface Mining Control and Reclamation Act of 1977, as amended (SMCRA)), and from mountaintop removal operations (conducted pursuant to section 515(c) of SMCRA);

(iii) Discharges from coal preparation plants and preparation plant associated areas (excluding acid or ferruginous mine drainage from coal refuse disposal piles).

(2) Any discharge or increase in the volume of a discharge caused by precipitation within any 24 hour period less than or equal to the 10-year, 24-hour precipitation event (or snowmelt of equivalent volume) may comply with the following limitations instead of the otherwise applicable limitations:

EFFLUENT LIMITATIONS DURING PRECIPITATION

Pollutant or pollutant property	Effluent limitations
Settleable solids	0.5 ml/1 maximum not to be exceeded.
pH	6.0–9.0 at all times.

(b) The following alternate limitations apply with respect to acid or ferruginous drainage from coal refuse disposal piles:

Any discharge or increase in the volume of a discharge caused by precipitation within any 24 hour period greater than the 1-year, 24-hour precipitation event, but less than or equal to the 10-year, 24-hour precipitation event (or snowmelt of equivalent volume) may comply with the following limitations instead of the otherwise applicable limitations:

EFFLUENT LIMITATIONS DURING PRECIPITATION

Pollutant or pollutant property	Effluent limitations
Settleable solids	0.5 ml/1 maximum not to be exceeded.
pH	6.0–9.0 at all times.

(c) The following alternate limitations apply with respect to acid or ferruginous mine drainage, except for discharges addressed in paragraphs (a) (mountaintop removal and steep slope areas), (d) (controlled surface mine discharges) and (f) (discharges from underground workings of underground mines) of this section:

(1) Any discharge or increase in the volume of a discharge caused by precipitation within any 24 hour period less than or equal to the 2-year, 24-hour precipitation event (or snowmelt of equivalent volume) may comply with the following limitations instead of the otherwise applicable limitations:

EFFLUENT LIMITATIONS DURING PRECIPITATION

Pollutant or pollutant property	Effluent limitations
Iron, total	7.0 mg/l maximum for any 1 day.
Settleable solids	0.5 ml/l maximum not to be exceeded.
pH	6.0–9.0 at all times.

(2) Any discharge or increase in the volume of a discharge caused by precipitation within any 24 hour period greater than the 2-year, 24-hour precipitation event, but less than or equal to the 10-year, 24-hour precipitation event (or snowmelt of equivalent volume) may comply with the following limitations instead of the otherwise applicable limitations:

EFFLUENT LIMITATIONS DURING PRECIPITATION

Pollutant or pollutant property	Effluent limitations
Settleable solids	0.5 ml/l maximum not to be exceeded.
pH	6.0–9.0 at all times.

(d)(1) The alternate limitations specified in paragraph (d)(2) of this section apply with respect to all discharges described in paragraphs (a), (b) and (c) of this section *and* to:

(i) Discharges of acid or ferruginous mine drainage from underground workings of underground mines which are commingled with other discharges eligible for these alternate limitations; and

(ii) Controlled acid or ferruginous surface mine discharges; and

(iii) Discharges from reclamation areas.

(2) Any discharge or increase in the volume of a discharge caused by precipitation within any 24 hour period greater than the 10-year, 24-hour precipitation event (or snowmelt of equivalent volume) may comply with the following limitations instead of the otherwise applicable limitations:

EFFLUENT LIMITATIONS DURING PRECIPITATION

Pollutant or pollutant property	Effluent limitations
pH	6.0–9.0 at all times.

(e) The operator shall have the burden of proof that the discharge or increase in discharge was caused by the applicable precipitation event described in paragraphs (a), (b), (c), and (d) of this section.

(f) Discharges of mine drainage from underground workings of underground mines which are not commingled with discharges eligible for alternate limitations set forth in this section shall in no event be eligible for the alternate limitations set forth in this section.

§ 434.64 Procedure and method detection limit for measurement of settleable solids.

For the purposes of this part, the following procedure shall be used to determine settleable solids: Fill an Imhoff cone to the one-liter mark with a thoroughly mixed sample. Allow to settle undisturbed for 45 minutes. Gently stir along the inside surface of the cone with a stirring rod. Allow to settle undisturbed for 15 minutes longer. Record the volume of settled material in the cone as milliliters per liter. Where a separation of settleable and floating materials occurs, do not include the floating material in the reading. Notwithstanding any provision of 40 CFR part 136, the method detection limit for measuring settleable solids under this part shall be 0.4 ml/l.

§ 434.65 Modification of NPDES permits for new sources.

Any coal mine or coal preparation plant which was considered a new source under previous EPA regulations may, notwithstanding § 122.62 of this chapter, apply to have its NPDES permit modified to incorporate the revised new source performance standards.

Subpart G—Coal Remining

SOURCE: 67 FR 3406, Jan. 23, 2002, unless otherwise noted.

§ 434.70 Specialized definitions.

(a) The term *coal remining operation* means a coal mining operation at a site on which coal mining was previously conducted and where the site has been abandoned or the performance bond has been forfeited.

(b) The term *pollution abatement area* means the part of the permit area that is causing or contributing to the baseline pollution load of pre-existing discharges. The pollution abatement area must include, to the extent practicable, areas adjacent to and nearby the remining operation that also must be affected to reduce the pollution load of the pre-existing discharges and may include the immediate location of the pre-existing discharges.

(c) The term *pre-existing discharge* means any discharge resulting from mining activities that have been abandoned prior to the time of a remining permit application. This term shall include a pre-existing discharge that is relocated as a result of the implementation of best management practices (BMPs) contained in the Pollution Abatement Plan.

(d) The term *steep slope* means any slope above twenty degrees or such lesser slope as may be defined by the regulatory authority after consideration of soil, climate, and other characteristics of a region or State. This term does not apply to those situations in which an operator is mining on flat or gently rolling terrain, on which an occasional steep slope is encountered and through which the mining operation is to proceed, leaving a plain or predominantly flat area.

(e) The term *new source remining operation* means a remining operation at a coal mine where mining first commences after February 22, 2002 and subsequently becomes an abandoned mine.

§ 434.71 Applicability.

(a) This subpart applies to pre-existing discharges that are located within or are hydrologically connected to pollution abatement areas of a coal remining operation.

(b) A pre-existing discharge that is intercepted by active mining or that is commingled with waste streams from active mining areas for treatment is subject to the provisions of § 434.61 Commingling of waste streams. For the purposes of this subpart, § 434.61 requires compliance with applicable BPT, BAT, BCT, and NSPS effluent limitations in subparts C, D, and F of this part. Section 434.61 applies to the commingled waste stream only during

the time when the pre-existing discharge is intercepted by active mining or is commingled with active mine wastewater for treatment or discharge. After commingling has ceased, the pre-existing discharge is subject to the provisions of this part.

(c) In situations where coal remining operations seek reissuance of an existing remining permit with BPJ limitations and the regulatory authority determines that it is not feasible for a remining operator to re-establish baseline pollutant levels in accordance with the statistical procedures contained in Appendix B of this part, pre-existing discharge limitations at existing remining operations shall remain subject to baseline pollutant levels established during the original permit application.

(d) The effluent limitations in this subpart apply to pre-existing discharges until the appropriate SMCRA authority has authorized bond release.

§ 434.72 Effluent limitations attainable by the application of the best practicable control technology currently available (BPT).

(a) The operator must submit a site-specific Pollution Abatement Plan to the permitting authority for the pollution abatement area. The plan must be approved by the permitting authority and incorporated into the permit as an effluent limitation. The Pollution Abatement Plan must identify characteristics of the pollution abatement area and the pre-existing discharges. The Pollution Abatement Plan must be designed to reduce the pollution load from pre-existing discharges and must identify the selected best management practices (BMPs) to be used. The plan must describe the design specifications, construction specifications, maintenance schedules, criteria for monitoring and inspection, and expected performance of the BMPs. The BMPs must be implemented as specified in the plan.

(b) (1) Except as provided in 40 CFR 125.30 through 125.32 and paragraph (b)(2) of this section, the following effluent limits apply to pre-existing discharges:

EFFLUENT LIMITATIONS

Pollutant	Requirement
(i) Iron, total	May not exceed baseline loadings (as defined by Appendix B of this part).
(ii) Manganese, total	May not exceed baseline loadings (as defined by Appendix B of this part).
(iii) Acidity, net	May not exceed baseline loadings (as defined by Appendix B of this part).
(iv) TSS	During remining and reclamation, may not exceed baseline loadings (as defined by Appendix B of this part). Prior to bond release, the pre-existing discharge must meet the applicable standards for TSS or SS contained in Subpart E.[1]

[1] A pre-existing discharge is exempt from meeting standards in Subpart E of this part for TSS and SS when the permitting authority determines that Subpart E standards are infeasible or impractical based on the site-specific conditions of soil, climate, topography, steep slopes, or other baseline conditions provided that the operator demonstrates that significant reductions of TSS and SS will be achieved through the incorporation of sediment control BMPs into the Pollution Abatement Plan as required by paragraph (a) of this section.

(2) If the permitting authority determines that it is infeasible to collect samples for establishing the baseline pollutant levels pursuant to paragraph (b)(1) of this section, and that remining will result in significant improvement that would not otherwise occur, then the numeric effluent limitations in paragraph (b)(1) of this section do not apply. Pre-existing discharges for which it is infeasible to collect samples for determination of baseline pollutant levels include, but are not limited to, discharges that exist as a diffuse groundwater flow that cannot be assessed via sample collection; a base flow to a receiving stream that cannot be monitored separate from the receiving stream; a discharge on a steep or hazardous slope that is inaccessible for

sample collection; or, a number of pre-existing discharges so extensive that monitoring of individual discharges is infeasible.

§ 434.73 Effluent limitations attainable by application of the best available technology economically achievable (BAT).

Except as provided in 40 CFR 125.30 through 125.32 and 434.72(b)(2), a pre-existing discharge must comply with the effluent limitations listed in § 434.72(b) for net acidity, iron and manganese. The operator must also submit and implement a Pollution Abatement Plan as required in § 434.72(a) .

§ 434.74 Effluent limitations attainable by application of the best conventional pollutant control technology (BCT).

Except as provided in 40 CFR 125.30 through 125.32 and 434.72(b)(2), a pre-existing discharge must comply with the effluent limitations listed in § 434.72(b) for total suspended solids. The operator must also submit and implement a Pollution Abatement Plan as required in § 434.72(a).

§ 434.75 New source performance standards (NSPS).

Except as provided in § 434.72(b)(2), a pre-existing discharge from a new source remining operation must comply with the effluent limitations listed in § 434.72(b) for iron, manganese, acidity and total suspended solids. The operator must also submit and implement a Pollution Abatement Plan as required in § 434.72(a).

Subpart H—Western Alkaline Coal Mining

SOURCE: 67 FR 3407, Jan. 23, 2002, unless otherwise noted.

§ 434.80 Specialized definitions.

(a) The term *brushing and grubbing area* means the area where woody plant materials that would interfere with soil salvage operations have been removed or incorporated into the soil that is being salvaged.

(b) The term *regraded area* means the surface area of a coal mine that has been returned to required contour.

(c) The term *sediment* means undissolved organic and inorganic material transported or deposited by water.

(d) The term *sediment yield* means the sum of the soil losses from a surface minus deposition in macro-topographic depressions, at the toe of the hillslope, along field boundaries, or in terraces and channels sculpted into the hillslope.

(e) The term *topsoil stockpiling area* means the area outside the mined-out area where topsoil is temporarily stored for use in reclamation, including containment berms.

(f) The term *western coal mining operation* means a surface or underground coal mining operation located in the interior western United States, west of the 100th meridian west longitude, in an arid or semiarid environment with an average annual precipitation of 26.0 inches or less.

§ 434.81 Applicability.

(a) This subpart applies to alkaline mine drainage at western coal mining operations from reclamation areas, brushing and grubbing areas, topsoil stockpiling areas, and regraded areas.

(b) This subpart applies to drainage at western coal mining operations from reclamation areas, brushing and grubbing areas, topsoil stockpiling areas, and regraded areas where the discharge, before any treatment, meets all the following requirements:

(1) pH is equal to or greater than 6.0;

(2) Dissolved iron concentration is less than 10 mg/L; and

(3) Net alkalinity is greater than zero.

(c) The effluent limitations in this subpart apply until the appropriate SMCRA authority has authorized bond release.

§ 434.82 Effluent limitations attainable by the application of the best practicable control technology currently available (BPT).

Except as provided in 40 CFR 125.30 through 125.32, the following effluent limitations apply to mine drainage from applicable areas of western coal mining operations:

(a) The operator must submit a site-specific Sediment Control Plan to the

permitting authority that is designed to prevent an increase in the average annual sediment yield from pre-mined, undisturbed conditions. The Sediment Control Plan must be approved by the permitting authority and be incorporated into the permit as an effluent limitation. The Sediment Control Plan must identify best management practices (BMPs) and also must describe design specifications, construction specifications, maintenance schedules, criteria for inspection, as well as expected performance and longevity of the best management practices.

(b) Using watershed models, the operator must demonstrate that implementation of the Sediment Control Plan will result in average annual sediment yields that will not be greater than the sediment yield levels from pre-mined, undisturbed conditions. The operator must use the same watershed model that was, or will be, used to acquire the SMCRA permit.

(c) The operator must design, implement, and maintain BMPs in the manner specified in the Sediment Control Plan.

§ 434.83 Effluent limitations attainable by application of the best available technology economically achievable (BAT).

Except as provided in 40 CFR 125.30 through 125.32, any existing western coal mining operation with drainage subject to this subpart must meet the effluent limitations in § 434.82.

§ 434.84 Effluent limitations attainable by application of the best conventional pollutant control technology (BCT). [Reserved]

§ 434.85 New source performance standards (NSPS).

Any new source western coal mining operation with drainage subject to this subpart must meet the effluent limitations in § 434.82.

APPENDIX A TO PART 434—ALTERNATE STORM LIMITATIONS FOR ACID OR FERRUGINOUS MINE DRAINAGE

APPENDIX A
ALTERNATE STORM LIMITATIONS
FOR ACID OR FERRUGINOUS MINE DRAINAGE

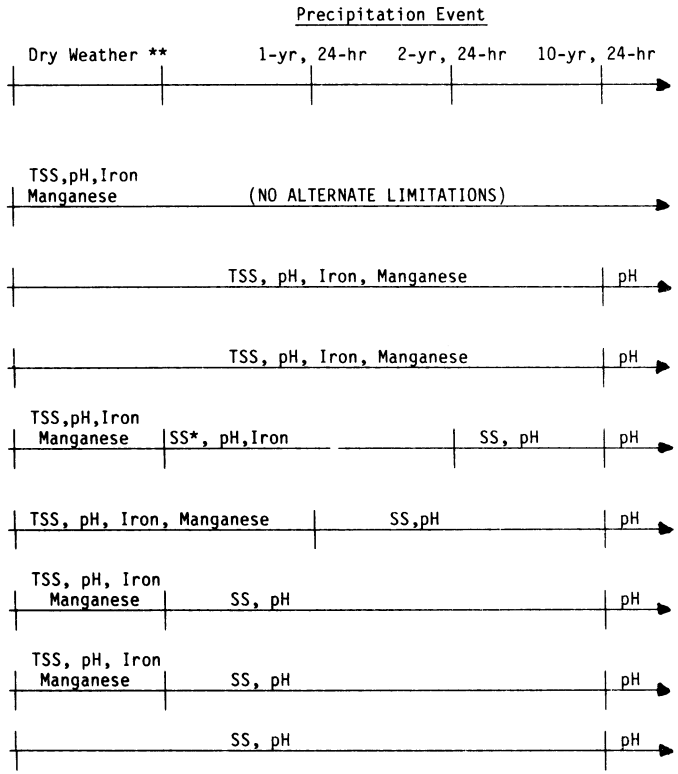

* SS = Settleable Solids
** Discharge caused by precipitation
\+ These categories do not differ from the Oct. 13, 1982 regulation.

APPENDIX B TO PART 434—BASELINE DETERMINATION AND COMPLIANCE MONITORING FOR PRE-EXISTING DISCHARGES AT REMINING OPERATIONS

I. GENERAL PROCEDURE REQUIREMENTS

a. This appendix presents the procedures to be used for establishing effluent limitations for pre-existing discharges at coal remining operations, in accordance with the requirements set forth in Subpart G; Coal Remining. The requirements specify that pollutant loadings of total iron, total manganese, total suspended solids, and net acidity in pre-existing discharges shall not exceed baseline pollutant loadings. The procedures described in this appendix shall be used for determining site-specific, baseline pollutant loadings, and for determining whether discharge loadings during coal remining operations have exceeded the baseline loading. Both a monthly (single-observation) procedure and an annual procedure shall be applied, as described below.

b. In order to sufficiently characterize pollutant loadings during baseline determination and during each annual monitoring period, it is required that at least one sample result be obtained per month for a period of 12 months.

c. Calculations described in this appendix must be applied to pollutant loadings. Each loading value is calculated as the product of a flow measurement and pollutant concentration taken on the same date at the same discharge sampling point, using standard units of flow and concentration (to be determined by the permitting authority). For example, flow may be measured in cubic feet per second, concentration in milligrams per liter, and the pollutant loading could be calculated in pounds per year.

d. Accommodating Data Below the Maximum Daily Limit at subpart C of this part. In the event that a pollutant concentration in the data used to determine baseline is lower than the daily maximum limitation established in subpart C of this part for active mine wastewater, the statistical procedures should not establish a baseline more stringent than the BPT and BAT effluent standards established in subpart C of this part. Therefore, if the total iron concentration in a baseline sample is below 7.0 mg/L, or the total manganese concentration is below 4.0 mg/L, the baseline sample concentration may be replaced with 7.0 mg/L and 4.0 mg/L, respectively, for the purposes of some of the statistical calculations in this Appendix B. The substituted values should be used for all methods in this Appendix B with the exception of the calculation of the interquartile range (R) in Method 1 for the annual trigger (Step 3), and in Method 2 for the single observation trigger (Step 3). The interquartile range (R) is the difference between the quartiles M_{-1} and M_1; these values should be calculated using actual loadings (based on measured concentrations) when they are used to calculate R. This should be done in order to account for the full range of variability in the data.

II. PROCEDURE FOR CALCULATING AND APPLYING A SINGLE-OBSERVATION (MONTHLY) TRIGGER

Two alternative methods are provided for calculating a single-observation trigger. One method must be selected and applied by the permitting authority for any given remining permit.

A. Method 1 for Calculating a Single Observation Trigger (L)

(1) Count the number of baseline observations taken for the pollutant of interest. Label this number n. In order to sufficiently characterize pollutant loadings during baseline determination and during each annual monitoring period, it is required that at least one sample result be obtained per month for a period of 12 months.

(2) Order all baseline loading observations from lowest to highest. Let the lowest number (minimum) be $x_{(1)}$, the next lowest be $x_{(2)}$, and so forth until the highest number (maximum) is $x_{(n)}$.

(3) If fewer than 17 baseline observations were obtained, then the single observation trigger (L) will equal the maximum of the baseline observations ($x_{(n)}$).

(4) If at least 17 baseline observations were obtained, calculate the median (M) of all baseline observations:

Instructions for calculation of a median of n observations:

If n is odd, then M equals $x_{(n/2+1/2)}$.

For example, if there are 17 observations, then $M = X_{(17/2+1/2)} = x_{(9)}$, the 9th highest observation.

If n is even, then M equals $0.5 * (x_{(n/2)} + x_{(n/2+1)})$.

For example, if there are 18 observations, then M equals 0.5 multiplied by the sum of the 9th and 10th highest observations.

(a) Next, calculate M_1 as the median of the subset of observations that range from the calculated M to the maximum $x_{(n)}$; that is, calculate the median of all x larger than or equal to M.

(b) Next, calculate M_2 as the median of the subset of observations that range from the calculated M_1 to $x_{(n)}$; that is, calculate the median of all x larger than or equal to M_1.

(c) Next, calculate M_3 as the median of the subset of observations that range from the calculated M_2 to $x_{(n)}$; that is, calculate the median of all x larger than or equal to M_2.

(d) Finally, calculate the single observation trigger (L) as the median of the subset of observations that range from the calculated M_3 to $x_{(n)}$.

NOTE: When subsetting the data for each of steps 3a–3d, the subset should include all observations greater than or equal to the median calculated in the previous step. If the median calculated in the previous step is not an actual observation, it is not included in the new subset of observations. The new median value will then be calculated using the median procedure, based on whether the number of points in the subset is odd or even.

(5) Method for applying the single observation trigger (L) to determine when the baseline level has been exceeded

If two successive monthly monitoring observations both exceed L, immediately begin weekly monitoring for four weeks (four weekly samples).

(a) If three or fewer of the weekly observations exceed L, resume monthly monitoring

(b) If all four weekly observations exceed L, the baseline pollution loading has been exceeded.

B. Method 2 for Calculating a Single Observation Trigger (L)

(1) Follow Method 1 above to obtain M_1 (the third quartile, that is, the 75th percentile).

(2) Calculate M_{-1} as the median of the baseline data which are less than or equal to the sample median M.

(3) Calculate interquartile range, $R = (M_1 - M_{-1})$.

(4) Calculate the single observation trigger L as

$L = M_1 + 3 * R$

(5) If two successive monthly monitoring observations both exceed L, immediately begin weekly monitoring for four weeks (four weekly samples).

(a) If three or fewer of the weekly observations exceed L, resume monthly monitoring

(b) If all four weekly observations exceed L, the baseline pollution loading has been exceeded.

III. PROCEDURE FOR CALCULATING AND APPLYING AN ANNUAL TRIGGER

A. Method 1 for Calculating and Applying an Annual Trigger (T)

(1) Calculate M and M_1 of the baseline loading data as described above under Method 1 for the single observation trigger.

(2) Calculate M_{-1} as the median of the baseline data which are less than or equal to the sample median M.

(3) Calculate the interquartile range, $R = (M_1 - M_{-1})$.

(4) The annual trigger for baseline (Tb) is calculated as:

$$Tb = M + \frac{(1.815 * R)}{\sqrt{n}}$$

where n is the number of baseline loading observations.

(5) To compare baseline loading data to observations from the annual monitoring period, repeat steps 1–3 for the set of monitoring observations. Label the results of the calculations M′ and R′. Let m be the number of monitoring observations.

(6) The subtle trigger (Tm) of the monitoring data is calculated as:

$$Tm = M' - \frac{(1.815 * R')}{\sqrt{m}}$$

(7) If Tm > Tb, the median loading of the monitoring observations has exceeded the baseline loading.

B. Method 2 for Calculating and Applying an Annual Trigger (T)

Method 2 applies the Wilcoxon-Mann-Whitney test to determine whether the median loading of the monitoring observations has exceeded the baseline median. No baseline value T is calculated.

(1) Steps for Conducting the Wilcoxon-Mann-Whitney Test

(a) Let n be the number of baseline loading observations taken, and let m be the number of monitoring loading observations taken. In order to sufficiently characterize pollutant loadings during baseline determination and during each annual monitoring period, it is required that at least one sample result be obtained per month for a period of 12 months.

(b) Order the combined baseline and monitoring observations from smallest to largest.

(c) Assign a rank to each observation based on the assigned order: the smallest observation will have rank 1, the next smallest will have rank 2, and so forth, up to the highest observation, which will have rank n + m.

(1) If two or more observations are tied (have the same value), then the average rank for those observations should be used. For example, suppose the following four values are being ranked:

3, 4, 6, 4

Since 3 is the lowest of the four numbers, it would be assigned a rank of 1. The highest of the four numbers is 6, and would be assigned a rank of 4. The other two numbers are both 4. Rather than assign one a rank of 2 and the other a rank of 3, the average of 2 and 3 (*i.e.*, 2.5) is given to both numbers.

(d) Sum all the assigned ranks of the n baseline observations, and let this sum be S_n.

(e) Obtain the critical value (C) from Table 1. When 12 monthly data are available for both baseline and monitoring (*i.e.*, n = 12 and m = 12), the critical value C is 99.

(f) Compare C to S_n. If S_n is less than C, then the monitoring loadings have exceeded the baseline loadings.

(2) Example Calculations for the Wilcoxon-Mann-Whitney Test

BASELINE DATA											
8.0	9.0	9.0	10.0	12.0	15.0	17.0	18.0	21.0	23.0	28.0	30.0
MONITORING DATA											
9.0	10.0	11.0	12.0	13.0	14.0	16.0	18.0	20.0	24.0	29.0	31.0
BASELINE RANKS											
1.0	3.0	3.0	5.5	8.5	12.0	14.0	15.5	18.0	19.0	21.0	23.0
MONITORING RANKS											
3.0	5.5	7.0	8.5	10.0	11.0	13.0	15.5	17.0	20.0	22.0	24.0

SUM OF RANKS FOR BASELINE IS SN = 143.5, CRITICAL VALUE IS $C_{n,m}$ = 99.

(3) Critical Values for the Wilcoxon-Mann-Whitney Test

(a) When n and m are less than 21, use Table 1.

In order to find the appropriate critical value, match column with correct n (number of baseline observations) to row with correct m (number of monitoring observations)*.

TABLE 1.—CRITICAL VALUES (C) OF THE WILCOXON-MANN-WHITNEY TEST

(for a one-sided test at the 0.001 significance level)

n m	10	11	12	13	14	15	16	17	18	19	20
10	66	79	93	109	125	142	160	179	199	220	243
11	68	82	96	112	128	145	164	183	204	225	248
12	70	84	99	115	131	149	168	188	209	231	253
13	73	87	102	118	135	153	172	192	214	236	259
14	75	89	104	121	138	157	176	197	218	241	265
15	77	91	107	124	142	161	180	201	223	246	270
16	79	94	110	127	145	164	185	206	228	251	276
17	81	96	113	130	149	168	189	211	233	257	281
18	83	99	116	134	152	172	193	215	238	262	287
19	85	101	119	137	156	176	197	220	243	268	293
20	88	104	121	140	160	180	202	224	248	273	299

(b) When n or m is greater than 20 and there are few ties, calculate an approximate critical value using the following formula and round the result to the next larger integer. Let N = n + m.

$$\text{CriticalValue} = 0.5 * n * (N+1) - 3.0902 * \sqrt{n * m\,(N+1)/12}$$

For example, this calculation provides a result of 295.76 for n = m = 20, and a result of 96.476 for n = m = 12. Rounding up produces approximate critical values of 296 and 97.

(c) When n or m is greater than 20 and there are many ties, calculate an approximate critical value using the following formula and round the result to the next larger integer. Let S be the sum of the squares of the ranks or average ranks of all N observations. Let N = n + m.

$$\text{CriticalValue} = 0.5 * n * (N+1) - 3.0902 * \sqrt{V}$$

In the preceding formula, calculate V using

$$V = \frac{n * m * S}{N * (N-1)} - \frac{n * m * (N+1)^2}{4 * (N-1)}$$

[67 FR 3408, Jan. 23, 2002]

PART 435—OIL AND GAS EXTRACTION POINT SOURCE CATEGORY

Subpart A—Offshore Subcategory

Sec.

435.10 Applicability; description of the offshore subcategory.
435.11 Specialized definitions.
435.12 Effluent limitations guidelines representing the degree of effluent reduction attainable by the application of the best practicable control technology currently available (BPT).
435.13 Effluent limitations guidelines representing the degree of effluent reduction attainable by the application of the best available technology economically achievable (BAT).
435.14 Effluent limitations guidelines representing the degree of effluent reduction attainable by the application of the best conventional pollutant control technology (BCT).
435.15 Standards of performance for new sources (NSPS).
APPENDIX 1 TO SUBPART A OF PART 435—STATIC SHEEN TEST
APPENDIX 2 TO SUBPART A OF PART 435—DRILLING FLUIDS TOXICITY TEST
APPENDIX 3 TO SUBPART A OF PART 435—PROCEDURE FOR MIXING BASE FLUIDS WITH SEDIMENTS
APPENDIX 4 TO SUBPART A OF PART 435—DETERMINATION OF BIODEGRADATION OF SYNTHETIC BASE FLUIDS IN A MARINE CLOSED BOTTLE TEST SYSTEM: SUMMARY OF MODIFICATIONS TO ISO 11734:1995
APPENDIX 5 TO SUBPART A OF PART 435—DETERMINATION OF CRUDE OIL CONTAMINATION IN NON-AQUEOUS DRILLING FLUIDS BY GAS CHROMATOGRAPHY/MASS SPECTROMETRY (GC/MS)
APPENDIX 6 TO SUBPART A OF PART 435—REVERSE PHASE EXTRACTION (RPE) METHOD FOR DETECTION OF OIL CONTAMINATION IN NON-AQUEOUS DRILLING FLUIDS (NAF)
APPENDIX 7 TO SUBPART A OF PART 435—API RECOMMENDED PRACTICE 13B–2
APPENDIX 8 TO SUBPART A OF PART 435—REFERENCE C_{16}–C_{18} INTERNAL OLEFIN DRILLING FLUID FORMULATION

Subpart B [Reserved]

Subpart C—Onshore Subcategory

435.30 Applicability; description of the onshore subcategory.
435.31 Specialized definitions.
435.32 Effluent limitations guidelines representing the degree of effluent reduction attainable by the application of the best practicable control technology currently available.

Subpart D—Coastal Subcategory

435.40 Applicability; description of the coastal subcategory.
435.41 Specialized definitions.
435.42 Effluent limitations guidelines representing the degree of effluent reduction attainable by the application of the best practicable control technology currently available (BPT).

435.43 Effluent limitations guidelines representing the degree of effluent reduction attainable by the application of the best available technology economically achievable (BAT).
435.44 Effluent limitations guidelines representing the degree of effluent reduction attainable by the application of the best conventional pollutant control technology (BCT).
435.45 Standards of performance for new sources (NSPS).
435.46 Pretreatment standards of performance for existing sources (PSES).
435.47 Pretreatment standards of performance for new sources (PSNS).
APPENDIX 1 TO SUBPART D OF PART 435—PROCEDURE FOR DETERMINING WHEN COASTAL COOK INLET OPERATORS QUALIFY FOR AN EXEMPTION FROM THE ZERO DISCHARGE REQUIREMENT FOR EMO-CUTTINGS AND SBF-CUTTINGS IN COASTAL COOK INLET, ALASKA

Subpart E—Agricultural and Wildlife Water Use Subcategory

435.50 Applicability; description of the beneficial use subcategory.
435.51 Specialized definitions.
435.52 Effluent limitations guidelines representing the degree of effluent reduction attainable by the application of the best practicable control technology currently available.

Subpart F—Stripper Subcategory

435.60 Applicability; description of the stripper subcategory.
435.61 Specialized definitions.

Subpart G—General Provisions

435.70 Applicability.

AUTHORITY: 33 U.S.C. 1311, 1314, 1316, 1317, 1318, 1342 and 1361.

SOURCE: 44 FR 22075, Apr. 13, 1979, unless otherwise noted.

Subpart A—Offshore Subcategory

SOURCE: 58 FR 12504, Mar. 4, 1993, unless otherwise noted.

§ 435.10 Applicability; description of the offshore subcategory.

The provisions of this subpart are applicable to those facilities engaged in field exploration, drilling, well production, and well treatment in the oil and gas industry which are located in waters that are seaward of the inner boundary of the territorial seas (''offshore'') as defined in section 502(g) of the Clean Water Act.

[61 FR 66123, Dec. 16, 1996]

§ 435.11 Specialized definitions.

For the purpose of this subpart:

(a) Except as provided below, the general definitions, abbreviations and methods of analysis set forth in 40 CFR part 401 shall apply to this subpart.

(b) *Average of daily values for 30 consecutive days* means the average of the daily values obtained during any 30 consecutive day period.

(c) *Base fluid* means the continuous phase or suspending medium of a drilling fluid formulation.

(d) *Base fluid retained on cuttings* as applied to BAT effluent limitations and NSPS refers to the American Petroleum Institute Recommended Practice 13B–2 supplemented with the specifications, sampling methods, and averaging method for retention values provided in Appendix 7 of Subpart A of this part.

(e) *Biodegradation rate* as applied to BAT effluent limitations and NSPS for drilling fluids and drill cuttings refers to the ISO 11734:1995 method: ''Water quality—Evaluation of the 'ultimate' anaerobic biodegradability of organic compounds in digested sludge—Method by measurement of the biogas production (1995 edition)'' supplemented with modifications in Appendix 4 of 40 CFR part 435, subpart A. This incorporation by reference was approved by the Director of the Federal Register in accordance with 5 U.S.C. 552(a) and 1 CFR part 51. Copies may be obtained from the American National Standards Institute, 11 West 42nd Street, 13th Floor, New York, NY 10036. Copies may be inspected at the Office of the Federal Register, 800 North Capitol Street, NW., Suite 700, Washington, DC. A copy may also be inspected at EPA's Water Docket, 401 M Street SW., Washington, DC 20460.

(f) *Daily values* as applied to produced water effluent limitations and NSPS means the daily measurements used to assess compliance with the maximum for any one day.

(g) *Deck drainage* means any waste resulting from deck washings, spillage, rainwater, and runoff from gutters and drains including drip pans and work

areas within facilities subject to this Subpart.

(h) *Development facility* means any fixed or mobile structure subject to this subpart that is engaged in the drilling of productive wells.

(i) *Diesel oil* refers to the grade of distillate fuel oil, as specified in the American Society for Testing and Materials Standard Specification for Diesel Fuel Oils D975–91, that is typically used as the continuous phase in conventional oil-based drilling fluids. This incorporation by reference was approved by the Director of the Federal Register in accordance with 5 U.S.C. 552(a) and 1 CFR part 51. Copies may be obtained from the American Society for Testing and Materials, 100 Barr Harbor Drive, West Conshohocken, PA, 19428. Copies may be inspected at the Office of the Federal Register, 800 North Capitol Street, NW., Suite 700, Washington, DC. A copy may also be inspected at EPA's Water Docket, 1200 Pennsylvania Ave., NW., Washington, DC 20460.

(j) *Domestic waste* means materials discharged from sinks, showers, laundries, safety showers, eye-wash stations, hand-wash stations, fish cleaning stations, and galleys located within facilities subject to this Subpart.

(k) *Drill cuttings* means the particles generated by drilling into subsurface geologic formations and carried out from the wellbore with the drilling fluid. Examples of drill cuttings include small pieces of rock varying in size and texture from fine silt to gravel. Drill cuttings are generally generated from solids control equipment and settle out and accumulate in quiescent areas in the solids control equipment or other equipment processing drilling fluid (*i.e.*, accumulated solids).

(1) *Wet drill cuttings* means the unaltered drill cuttings and adhering drilling fluid and formation oil carried out from the wellbore with the drilling fluid.

(2) *Dry drill cuttings* means the residue remaining in the retort vessel after completing the retort procedure specified in appendix 7 of subpart A of this part.

(l) *Drilling fluid* means the circulating fluid (mud) used in the rotary drilling of wells to clean and condition the hole and to counterbalance formation pressure. Classes of drilling fluids are:

(1) *Water-based drilling fluid* means the continuous phase and suspending medium for solids is a water-miscible fluid, regardless of the presence of oil.

(2) *Non-aqueous drilling fluid* means the continuous phase and suspending medium for solids is a water-immiscible fluid, such as oleaginous materials (*e.g.*, mineral oil, enhanced mineral oil, paraffinic oil, C_{16}–C_{18} internal olefins, and C_8–C_{16} fatty acid/2-ethylhexyl esters).

(i) *Oil-based* means the continuous phase of the drilling fluid consists of diesel oil, mineral oil, or some other oil, but contains no synthetic material or enhanced mineral oil.

(ii) *Enhanced mineral oil-based* means the continuous phase of the drilling fluid is enhanced mineral oil.

(iii) *Synthetic-based* means the continuous phase of the drilling fluid is a synthetic material or a combination of synthetic materials.

(m) *Enhanced mineral oil* as applied to enhanced mineral oil-based drilling fluid means a petroleum distillate which has been highly purified and is distinguished from diesel oil and conventional mineral oil in having a lower polycyclic aromatic hydrocarbon (PAH) content. Typically, conventional mineral oils have a PAH content on the order of 0.35 weight percent expressed as phenanthrene, whereas enhanced mineral oils typically have a PAH content of 0.001 or lower weight percent PAH expressed as phenanthrene.

(n) *Exploratory facility* means any fixed or mobile structure subject to this Subpart that is engaged in the drilling of wells to determine the nature of potential hydrocarbon reservoirs.

(o) *Formation oil* means the oil from a producing formation which is detected in the drilling fluid, as determined by the GC/MS compliance assurance method specified in appendix 5 of subpart A of this part when the drilling fluid is analyzed before being shipped offshore, and as determined by the RPE method specified in appendix 6 of subpart A of this part when the drilling fluid is analyzed at the offshore point of discharge. Detection of formation oil by the RPE method may be confirmed by the GC/

MS compliance assurance method, and the results of the GC/MS compliance assurance method shall supercede those of the RPE method.

(p) *M9IM* means those offshore facilities continuously manned by nine (9) or fewer persons or only intermittently manned by any number of persons.

(q) *M10* means those offshore facilities continuously manned by ten (10) or more persons.

(r) *Maximum* as applied to BAT effluent limitations and NSPS for drilling fluids and drill cuttings means the maximum concentration allowed as measured in any single sample of the barite for determination of cadmium and mercury content.

(s) *Maximum for any one day* as applied to BPT, BCT and BAT effluent limitations and NSPS for oil and grease in produced water means the maximum concentration allowed as measured by the average of four grab samples collected over a 24-hour period that are analyzed separately. Alternatively, for BAT and NSPS the maximum concentration allowed may be determined on the basis of physical composition of the four grab samples prior to a single analysis.

(t) *Maximum weighted mass ratio averaged over all NAF well sections* for BAT effluent limitations and NSPS for base fluid retained on cuttings means the weighted average base fluid retention for all NAF well sections as determined by the API Recommended Practice 13B–2, using the methods and averaging calculations presented in Appendix 7 of subpart A of this part.

(u) *Method 1654A* refers to Method 1654, Revision A, entitled ''PAH Content of Oil by HPLC/UV,'' December 1992, which is published in *Methods for the Determination of Diesel, Mineral, and Crude Oils in Offshore Oil and Gas Industry Discharges*, EPA–821–R–92–008. This incorporation by reference was approved by the Director of the Federal Register in accordance with 5 U.S.C. 552(a) and 1 CFR part 51. Copies may be obtained from the National Technical Information Service, Springfield, VA 22161, 703–605–6000. Copies may be inspected at the Office of the Federal Register, 800 North Capitol Street, NW., Suite 700, Washington, DC. A copy may also be inspected at EPA's Water Docket, 1200 Pennsylvania Ave., NW., Washington, DC 20460.

(v) *Minimum* as applied to BAT effluent limitations and NSPS for drilling fluids and drill cuttings means the minimum 96-hour LC_{50} value allowed as measured in any single sample of the discharged waste stream. *Minimum* as applied to BPT and BCT effluent limitations and NSPS for sanitary wastes means the minimum concentration value allowed as measured in any single sample of the discharged waste stream.

(w)(1) *New source* means any facility or activity of this subcategory that meets the definition of ''new source'' under 40 CFR 122.2 and meets the criteria for determination of new sources under 40 CFR 122.29(b) applied consistently with all of the following definitions:

(i) *Water area* as used in ''site'' in 40 CFR 122.29 and 122.2 means the water area and water body floor beneath any exploratory, development, or production facility where such facility is conducting its exploratory, development or production activities.

(ii) *Significant site preparation work* as used in 40 CFR 122.29 means the process of surveying, clearing or preparing an area of the water body floor for the purpose of constructing or placing a development or production facility on or over the site.

(2) ''New Source'' does not include facilities covered by an existing NPDES permit immediately prior to the effective date of these guidelines pending EPA issuance of a new source NPDES permit.

(x) *No discharge of free oil* means that waste streams may not be discharged that contain free oil as evidenced by the monitoring method specified for that particular stream, *e.g.*, deck drainage or miscellaneous discharges cannot be discharged when they would cause a film or sheen upon or discoloration of the surface of the receiving water; drilling fluids or cuttings may not be discharged when they fail the static sheen test defined in Appendix 1 of subpart A of this part.

(y) Parameters that are regulated in this Subpart and listed with approved methods of analysis in Table 1B at 40 CFR 136.3 are defined as follows:

(1) *Cadmium* means total cadmium.

(2) *Chlorine* means total residual chlorine.

(3) *Mercury* means total mercury.

(4) *Oil and Grease* means total recoverable oil and grease.

(z) *PAH (as phenanthrene)* means polynuclear aromatic hydrocarbons reported as phenanthrene.

(aa) *Produced sand* means the slurried particles used in hydraulic fracturing, the accumulated formation sands and scales particles generated during production. Produced sand also includes desander discharge from the produced water waste stream, and blowdown of the water phase from the produced water treating system.

(bb) *Produced water* means the water (brine) brought up from the hydrocarbon-bearing strata during the extraction of oil and gas, and can include formation water, injection water, and any chemicals added downhole or during the oil/water separation process.

(cc) *Production facility* means any fixed or mobile structure subject to this Subpart that is either engaged in well completion or used for active recovery of hydrocarbons from producing formations.

(dd) *Sanitary waste* means the human body waste discharged from toilets and urinals located within facilities subject to this Subpart.

(ee) *Sediment toxicity* as applied to BAT effluent limitations and NSPS for drilling fluids and drill cuttings refers to the ASTM E 1367–92 method: ''Standard Guide for Conducting 10-day Static Sediment Toxicity Tests with Marine and Estuarine Amphipods,'' 1992, with Leptocheirus plumulosus as the test organism and sediment preparation procedures specified in Appendix 3 of 40 CFR part 435, subpart A. This incorporation by reference was approved by the Director of the Federal Register in accordance with 5 U.S.C. 552(a) and 1 CFR part 51. Copies may be obtained from the American Society for Testing and Materials, 100 Barr Harbor Drive, West Conshohocken, PA, 19428. Copies may be inspected at the Office of the Federal Register, 800 North Capitol Street, NW., Suite 700, Washington, DC. A copy may also be inspected at EPA's Water Docket, 1200 Pennsylvania Ave., NW., Washington, DC 20460.

(ff) *Solids control equipment* means shale shakers, centrifuges, mud cleaners, and other equipment used to separate drill cuttings and/or stock barite solids from drilling fluid recovered from the wellbore.

(gg) *SPP toxicity* as applied to BAT effluent limitations and NSPS for drilling fluids and drill cuttings refers to the bioassay test procedure presented in Appendix 2 of subpart A of this part.

(hh) *Static sheen test* means the standard test procedure that has been developed for this industrial subcategory for the purpose of demonstrating compliance with the requirement of no discharge of free oil. The methodology for performing the static sheen test is presented in Appendix 1 of subpart A of this part.

(ii) *Stock barite* means the barite that was used to formulate a drilling fluid.

(jj) *Stock base fluid* means the base fluid that was used to formulate a drilling fluid.

(kk) *Synthetic material* as applied to synthetic-based drilling fluid means material produced by the reaction of specific purified chemical feedstock, as opposed to the traditional base fluids such as diesel and mineral oil which are derived from crude oil solely through physical separation processes. Physical separation processes include fractionation and distillation and/or minor chemical reactions such as cracking and hydro processing. Since they are synthesized by the reaction of purified compounds, synthetic materials suitable for use in drilling fluids are typically free of polycyclic aromatic hydrocarbons (PAH's) but are sometimes found to contain levels of PAH up to 0.001 weight percent PAH expressed as phenanthrene. Internal olefins and vegetable esters are two examples of synthetic materials suitable for use by the oil and gas extraction industry in formulating drilling fluids. Internal olefins are synthesized from the isomerization of purified straight-chain (linear) hydrocarbons such as C_{16}–C_{18} linear alpha olefins. C_{16}–C_{18} linear alpha olefins are unsaturated hydrocarbons with the carbon to carbon double bond in the terminal position. Internal olefins are typically formed from heating linear alpha olefins with

a catalyst. The feed material for synthetic linear alpha olefins is typically purified ethylene. Vegetable esters are synthesized from the acid-catalyzed esterification of vegetable fatty acids with various alcohols. EPA listed these two branches of synthetic fluid base materials to provide examples, and EPA does not mean to exclude other synthetic materials that are either in current use or may be used in the future. A synthetic-based drilling fluid may include a combination of synthetic materials.

(ll) *Well completion fluids* means salt solutions, weighted brines, polymers, and various additives used to prevent damage to the well bore during operations which prepare the drilled well for hydrocarbon production.

(mm) *Well treatment fluids* means any fluid used to restore or improve productivity by chemically or physically altering hydrocarbon-bearing strata after a well has been drilled.

(nn) *Workover fluids* means salt solutions, weighted brines, polymers, or other specialty additives used in a producing well to allow for maintenance, repair or abandonment procedures.

(oo) *4-day* LC_{50} as applied to the sediment toxicity BAT effluent limitations and NSPS means the concentration (milligrams/kilogram dry sediment) of the drilling fluid in sediment that is lethal to 50 percent of the Leptocheirus plumulosus test organisms exposed to that concentration of the drilling fluids after four days of constant exposure.

(pp) *10-day* LC_{50} as applied to the sediment toxicity BAT effluent limitations and NSPS means the concentration (milligrams/kilogram dry sediment) of the base fluid in sediment that is lethal to 50 percent of the Leptocheirus plumulosus test organisms exposed to that concentration of the base fluids after ten days of constant exposure.

(qq) *96-hour* LC_{50} means the concentration (parts per million) or percent of the suspended particulate phase (SPP) from a sample that is lethal to 50 percent of the test organisms exposed to that concentration of the SPP after 96 hours of constant exposure.

(rr) C_{16}–C_{18} *internal olefin* means a 65/35 blend, proportioned by mass, of hexadecene and octadecene, respectively. Hexadecene is an unsaturated hydrocarbon with a carbon chain length of 16, an internal double carbon bond, and is represented by the Chemical Abstracts Service (CAS) No. 26952–14–7. Octadecene is an unsaturated hydrocarbon with a carbon chain length of 18, an internal double carbon bond, and is represented by the Chemical Abstracts Service (CAS) No. 27070–58–2. (Properties available from the Chemical Abstracts Service, 2540 Olentangy River Road, PO Box 3012, Columbus, OH, 43210).

(ss) C_{16}–C_{18} *internal olefin drilling fluid* means a C_{16}–C_{18} internal olefin drilling fluid formulated as specified in Appendix 8 of subpart A of this part.

(tt) C_{12}–C_{14} *ester* and C_8 *ester* means the fatty acid/2-ethylhexyl esters with carbon chain lengths ranging from 8 to 16 and represented by the Chemical Abstracts Service (CAS) No. 135800–37–2. (Properties available from the Chemical Abstracts Service, 2540 Olentangy River Road, PO Box 3012, Columbus, OH, 43210)

[61 FR 66124, Dec. 16, 1996, as amended at 66 FR 6895, Jan. 22, 2001]

§ 435.12 Effluent limitations guidelines representing the degree of effluent reduction attainable by the application of the best practicable control technology currently available (BPT).

Except as provided in 40 CFR 125.30–32, any existing point source subject to this subpart must achieve the following effluent limitations representing the degree of effluent reduction attainable by the application of the best practicable control technology currently available:

BPT EFFLUENT LIMITATIONS—OIL AND GREASE

[In milligrams per liter]

Pollutant parameter waste source	Maximum for any 1 day	Average of values for 30 consecutive days shall not exceed	Residual chlorine minimum for any 1 day
Produced water	72	48	NA
Deck drainage	(1)	(1)	NA
Water-based:			
Drilling fluids	(1)	(1)	NA
Drill Cuttings	(1)	(1)	NA

BPT EFFLUENT LIMITATIONS—OIL AND GREASE—Continued

[In milligrams per liter]

Pollutant parameter waste source	Maximum for any 1 day	Average of values for 30 consecutive days shall not exceed	Residual chlorine minimum for any 1 day
Non-aqueous:			
Drilling fluids	No discharge	No discharge	NA
Drill Cuttings	(1)	(1)	NA
Well treatment fluids	(1)	(1)	NA
Sanitary:			
M10	NA	NA	2 1
M9IM 3	NA	NA	NA
Domestic	NA	NA	NA

1 No discharge of free oil.
2 Minimum of 1 mg/l and maintained as close to this concentration as possible.
3 There shall be no floating solids as a result of the discharge of these wastes.

[58 FR 12504, Apr. 13, 1979, as amended at 66 FR 6897, Jan. 22, 2001]

§ 435.13 Effluent limitations guidelines representing the degree of effluent reduction attainable by the application of the best available technology economically achievable (BAT).

Except as provided in 40 CFR 125.30–32, any existing point source subject to this subpart must achieve the following effluent limitations representing the degree of effluent reduction attainable by the application of the best available technology economically achievable (BAT):

BAT EFFLUENT LIMITATIONS

Waste source	Pollutant parameter	BAT effluent limitation
Produced water	Oil & grease	The maximum for any one day shall not exceed 42 mg/l; the average of daily values for 30 consecutive days shall not exceed 29 mg/l.

BAT EFFLUENT LIMITATIONS—Continued

Waste source	Pollutant parameter	BAT effluent limitation
Drilling fluids and drill cuttings:		
(A) For facilities located within 3 miles from shore.	.....	No discharge.1
(B) For facilities located beyond 3 miles from shore:.		
Water-based drilling fluids and associated drill cuttings.	SPP Toxicity	Minimum 96-hour LC_{50} of the SPP Toxicity Test 2 shall be 3% by volume.
	Free oil	No discharge.3
	Diesel oil	No discharge.
	Mercury	1 mg/kg dry weight maximum in the stock barite.
	Cadmium	3 mg/kg dry weight maximum in the stock barite.
Non-aqueous drilling fluids (NAFs).	.....	No discharge.
Drill cuttings associated with non-aqueous drilling fluids:		
Stock Limitations (C_{16}–C_{18} internal olefin).	Mercury	1 mg/kg dry weight maximum in the stock barite.
	Cadmium	3 mg/kg dry weight maximum in the stock barite.
	Polynuclear Aromatic Hydrocarbons (PAH).	PAH mass ratio 5 shall not exceed $1x10^{-5}$.
	Sediment toxicity.	Base fluid sediment toxicity ratio 6 shall not exceed 1.0.
	Biodegradation rate.	Biodegradation rate ratio 7 shall not exceed 1.0.
Discharge Limitations.	Diesel oil	No discharge.
	SPP Toxicity	Minimum 96-hour LC_{50} of the SPP Toxicity Test 2 shall be 3% by volume.
	Sediment toxicity.	Drilling fluid sediment toxicity ratio 8 shall not exceed 1.0.
	Formation Oil	No discharge.9

BAT EFFLUENT LIMITATIONS—Continued

Waste source	Pollutant parameter	BAT effluent limitation
	Base fluid retained on cuttings.	For NAFs that meet the stock limitations (C_{16}–C_{18} internal olefin) in this table, the maximum weighted mass ratio averaged over all NAF well sections shall be 6.9 g-NAF base fluid/100 g-wet drill cuttings.[10] For NAFs that meet the C_{12}–C_{14} ester or C_8 ester stock limitations in footnote 11 of this table, the maximum weighted mass ratio averaged over all NAF well sections shall be 9.4 g-NAF base fluid/100 g-wet drill cuttings.
Well treatment, completion, and workover fluids.	Oil and grease.	The maximum for any one day shall not exceed 42 mg/l; the average of daily values for 30 consecutive days shall not exceed 29 mg/l.
Deck drainage	Free oil	No discharge.[4]
Produced sand	.....	No discharge.
Domestic Waste	Foam	No discharge.

[1] All Alaskan facilities are subject to the drilling fluids and drill cuttings discharge limitations for facilities located beyond 3 miles offshore.

[2] As determined by the suspended particulate phase (SPP) toxicity test (Appendix 2 of subpart A of this part).

[3] As determined by the static sheen test (appendix 1).

[4] As determined by the presence of a film or sheen upon or a discoloration of the surface of the receiving water (visual sheen).

[5] PAH mass ratio = Mass (g) of PAH (as phenanthrene)/Mass (g) of stock base fluid as determined by EPA Method 1654, Revision A, (specified at § 435.11(u)) entitled ''PAH Content of Oil by HPLC/UV,'' December 1992, which is published in *Methods for the Determination of Diesel, Mineral, and Crude Oils in Offshore Oil and Gas Industry Discharges,* EPA–821–R–92–008. This incorporation by reference was approved by the Director of the Federal Register in accordance with 5 U.S.C. 552(a) and 1 CFR part 51. Copies may be obtained from the National Technical Information Service, Springfield, VA 22161, 703–605–6000. Copies may be inspected at the Office of the Federal Register, 800 North Capitol Street, NW., Suite 700, Washington, DC. A copy may also be inspected at EPA's Water Docket, 1200 Pennsylvania Ave., NW., Washington, DC 20460.

[6] Base fluid sediment toxicity ratio = 10-day LC_{50} of C_{16}–C_{18} internal olefin/10-day LC_{50} of stock base fluid as determined by ASTM E 1367–92 [specified at § 435.11(ee)] method: ''Standard Guide for Conducting 10-day Static Sediment Toxicity Tests with Marine and Estuarine Amphipods,'' 1992, after preparing the sediment according to the method specified in Appendix 3 of subpart A of this part. This incorporation by reference was approved by the Director of the Federal Register in accordance with 5 U.S.C. 552(a) and 1 CFR part 51. Copies may be obtained from the American Society for Testing and Materials, 100 Barr Harbor Drive, West Conshohocken, PA, 19428. Copies may be inspected at the Office of the Federal Register, 800 North Capitol Street, NW., Suite 700, Washington, DC. A copy may also be inspected at EPA's Water Docket, 1200 Pennsylvania Ave., NW., Washington, DC 20460.

[7] Biodegradation rate ratio = Cumulative gas production (ml) of C_{16}–C_{18} internal olefin/Cumulative gas production (ml) of stock base fluid, both at 275 days as determined by ISO 11734:1995 [specified at § 435.11(e)] method: ''Water quality—Evaluation of the 'ultimate' anaerobic biodegradability of organic compounds in digested sludge—Method by measurement of the biogas production (1995 edition)'' as modified for the marine environment (Appendix 4 of subpart A of this part). This incorporation by reference was approved by the Director of the Federal Register in accordance with 5 U.S.C. 552(a) and 1 CFR part 51. Copies may be obtained from the American National Standards Institute, 11 West 42nd Street, 13th Floor, New York, NY 10036. Copies may be inspected at the Office of the Federal Register, 800 North Capitol Street, NW., Suite 700, Washington, DC. A copy may also be inspected at EPA's Water Docket, 1200 Pennsylvania Ave., NW., Washington, DC 20460.

[8] Drilling fluid sediment toxicity ratio = 4-day LC_{50} of C_{16}–C_{18} internal olefin drilling fluid/4-day LC_{50} of drilling fluid removed from drill cuttings at the solids control equipment as determined by ASTM E 1367–92 (specified at § 435.11(ee)) method: ''Standard Guide for Conducting 10-day Static Sediment Toxicity Tests with Marine and Estuarine Amphipods,'' 1992, after preparing the sediment according to the method specified in Appendix 3 of subpart A of this part. This incorporation by reference was approved by the Director of the Federal Register in accordance with 5 U.S.C. 552(a) and 1 CFR part 51. Copies may be obtained from the American Society for Testing and Materials, 100 Barr Harbor Drive, West Conshohocken, PA, 19428. Copies may be inspected at the Office of the Federal Register, 800 North Capitol Street, NW., Suite 700, Washington, DC. A copy may also be inspected at EPA's Water Docket, 1200 Pennsylvania Ave., NW., Washington, DC 20460.

[9] As determined before drilling fluids are shipped offshore by the GC/MS compliance assurance method (Appendix 5 of subpart A of this part), and as determined prior to discharge by the RPE method (Appendix 6 of subpart A of this part) applied to drilling fluid removed from drill cuttings. If the operator wishes to confirm the results of the RPE method (Appendix 6 of subpart A of this part), the operator may use the GC/MS compliance assurance method (Appendix 5 of subpart A of this part). Results from the GC/MS compliance assurance method (Appendix 5 of subpart A of this part) shall supercede the results of the RPE method (Appendix 6 of subpart A of this part).

[10] Maximum permissible retention of non-aqueous drilling fluid (NAF) base fluid on wet drill cuttings averaged over drilling intervals using NAFs as determined by the API retort method (Appendix 7 of subpart A of this part). This limitation is applicable for NAF base fluids that meet the base fluid sediment toxicity ratio (Footnote 6), biodegradation rate ratio (Footnote 7), PAH, mercury, and cadmium stock limitations (C_{16}–C_{18} internal olefin) defined above in this table.

[11] Maximum permissible retention of non-aqueous drilling fluid (NAF) base fluid on wet drill cuttings average over drilling intervals using NAFs as determined by the API retort method (Appendix 7 of subpart A of this part). This limitation is applicable for NAF base fluids that meet the ester base fluid sediment toxicity ratio and ester biodegradation rate ratio stock limitations defined as: (a) ester base fluid sediment toxicity ratio = 10-day LC_{50} of C_{12}–C_{14} ester or C_8 ester /10-day LC_{50} of stock base fluid as determined by ASTM E 1367–92 (specified at § 435.11(ee)) method: ''Standard Guide for Conducting 10-day Static Sediment Toxicity Tests with Marine and Estuarine Amphipods,'' 1992, after preparing the sediment according to the method specified in Appendix 3 of subpart A of this part. This incorporation by reference was approved by the Director of the Federal Register in accordance with 5 U.S.C. 552(a) and 1 CFR part 51. Copies may be obtained from the American Society for Testing and Materials, 100 Barr Harbor Drive, West Conshohocken, PA, 19428. Copies may be inspected at the Office of the Federal Register, 800 North Capitol Street, NW., Suite 700, Washington, DC. A copy may also be inspected at EPA's Water Docket, 1200 Pennsylvania Ave., NW., Washington, DC 20460. (b) ester biodegradation rate ratio = Cumulative gas production (ml) of C_{12}–C_{14} ester or C_8 ester/Cumulative gas production (ml) of stock base fluid, both at 275 days as determined by ISO 11734:1995 (specified at § 435.11(e)) method: ''Water quality—Evaluation of the 'ultimate' anaerobic biodegradability of organic compounds in digested sludge—Method by measurement of the biogas production (1995 edition)'' as modified for the marine environment (Appendix 4 of subpart A of this part). This incorporation by reference was approved by the Director of the Federal Register in accordance with 5 U.S.C. 552(a) and 1 CFR part 51. Copies may be obtained from the American National Standards Institute, 11 West 42nd Street, 13th Floor, New York, NY 10036. Copies may be inspected at the Office of the Federal Register, 800 North Capitol Street, NW., Suite 700, Washington, DC. A copy may also be inspected at EPA's Water Docket, 1200 Pennsylvania Ave., NW., Washington, DC 20460. (c) PAH mass ratio (Footnote 5), mercury, and cadmium stock limitations (C_{16}–C_{18} internal olefin) defined above in this table.

[58 FR 12504, Apr. 13, 1979, as amended at 66 FR 6898, Jan. 22, 2001]

§ 435.14 Effluent limitations guidelines representing the degree of effluent reduction attainable by the application of the best conventional pollutant control technology (BCT).

Except as provided in 40 CFR 125.30–32, any existing point source subject to this subpart must achieve the following effluent limitations representing the degree of effluent reduction attainable by the application of the best conventional pollutant control technology (BCT):

BCT EFFLUENT LIMITATIONS

Waste source	Pollutant parameter	BCT effluent limitation
Produced water	Oil & grease	The maximum for any one day shall not exceed 72 mg/l; the average of values for 30 consecutive days shall not exceed 48 mg/l.
Drilling fluids and drill cuttings:		
(A) For facilities located within 3 miles from shore.	.....	No discharge.[1]

BCT EFFLUENT LIMITATIONS—Continued

Waste source	Pollutant parameter	BCT effluent limitation
(B) For facilities located beyond 3 miles from shore:.		
Water-based drilling fluids and associated drill cuttings.	Free Oil	No discharge.[2]
Non-aqueous drilling fluids.	.....	No discharge.
Drill cuttings associated with non-aqueous drilling fluids.	Free Oil	No discharge.[2]
Well treatment, completion and workover fluids.	Free oil	No discharge.[2]
Deck drainage	Free oil	No discharge.[3]
Produced sand	.....	No discharge.
Sanitary M10	Residual chlorine.	Minimum of 1 mg/l and maintained as close to this concentration as possible.
Sanitary M91M	Floating solids.	No discharge.
Domestic Waste	Floating solids.	No discharge.
	All other domestic waste.	See 33 CFR part 151.

[1] All Alaskan facilities are subject to the drilling fluids and drill cuttings discharge limitations for facilities located more than 3 miles offshore.

[2] As determined by the static sheen test (appendix 1).

[3] As determined by the presence of a film or sheen upon or a discoloration of the surface of the receiving water (visual sheen).

[58 FR 12504, Apr. 13, 1979, as amended at 66 FR 6899, Jan. 22, 2001]

§ 435.15 Standards of performance for new sources (NSPS).

Any new source subject to this subpart must achieve the following new source performance standards (NSPS):

NEW SOURCE PERFORMANCE STANDARDS

Waste source	Pollutant parameter	NSPS
Produced water	Oil and grease.	The maximum for any one day shall not exceed 42 mg/l; the average of daily values for 30 consecutive days shall not exceed 29 mg/l.
Drilling fluids and drill cuttings:		
(A) For facilities located within 3 miles from shore.	.....	No discharge.[1]

NEW SOURCE PERFORMANCE STANDARDS—Continued

Waste source	Pollutant parameter	NSPS
(B) For facilities located beyond 3 miles from shore:		
Water-based drilling fluids and associated drill cuttings.	SPP Toxicity	Minimum 96-hour LC_{50} of the SPP Toxicity Test[2] shall be 3% by volume.
	Free oil	No discharge.[3]
	Diesel oil	No discharge.
	Mercury	1mg/kg dry weight maximum in the stock barite.
	Cadmium	3 mg/kg dry weight maximum in the stock barite.
Non-aqueous drilling fluids.		No charge.
Drill cuttings associated with non-aqueous drilling fluids:		
Stock Limitations (C_{16}–C_{18} internal olefin.	Mercury	1mg/kg dry weight maximum in the stock barite.
	Cadmium	3 mg/kg dry weight maximum in the stock barite.
	Polynuclear Aromatic Hydrocarbons (PAH).	PAH mass ratio[5] shall not exceed 1×10^{-5}.
	Sediment toxicity.	Base fluid sediment toxicity ratio[6] shall not exceed 1.0.
	Biodegradation rate.	Biodegradation rate ratio[7] shall not exceed 1.0.
Discharge Limitations.	Diesel oil	No discharge.
	SPP Toxicity	Minimum 96-hour LC_{50} of the SPP Toxicity Test[2] shall be 3% by volume.
	Sediment toxicity.	Drilling fluid sediment toxicity ratio[8] shall not exceed 1.0.
	Formation Oil	No discharge.[9]
	Base fluid retained on cuttings.	For NAFs that meet the stock limitations (C_{16}–C_{18} internal olefin) in this table, the maximum weighted mass ratio averaged over all NAF well sections shall be 6.9 g–NAF base fluid/100 g-wet drill cuttings.[10] For NAFs that meet the C_{12}–C_{14} ester or C_8 ester stock limitations in footnote 11 of this table, the maximum weighted mass ratio averaged over all NAF well sections shall be 9.4 g–NAF base fluid/100 g-wet drill cuttings.
Well treatment, completion, and workover fluids.	Oil and grease.	The maximum for any one day shall not exceed 42 mg/l; the average of daily values for 30 consecutive days shall not exceed 29 mg/l.
Deck drainage	Free oil	No discharge.[4]
Produced sand		No discharge.
Sanitary M10	Residual chlorine.	Minimum of 1 mg/l and maintained as close to this as possible.
Sanitary M9IM	Floating solids.	No discharge.
Domestic Waste	Floating solids.	No discharge.
	Foam	No discharge.
	All other domestic wastes.	See 33 CFR part 151.

[1] All Alaskan facilities are subject to the drilling fluids and drill cuttings discharge standards for facilities located more than three miles offshore.

[2] As determined by the suspended particulate phase (SPP) toxicity test (Appendix 2 of subpart A of this part).

[3] As determined by the static sheen test (appendix 1).

[4] As determined by the presence of a film or sheen upon or a discoloration of the surface of the receiving water (visual sheen).

[5] PAH mass ratio = Mass (g) of PAH (as phenanthrene)/Mass (g) of stock base fluid as determined by EPA Method 1654, Revision A, (specified at § 435.11(u)) entitled ''PAH Content of Oil by HPLC/UV,'' December 1992, which is published in *Methods for the Determination of Diesel, Mineral, and Crude Oils in Offshore Oil and Gas Industry Discharges*, EPA–821–R–92–008. This incorporation by reference was approved by the Director of the Federal Register in accordance with 5 U.S.C. 552(a) and 1 CFR part 51. Copies may be obtained from the National Technical Information Service, Springfield, VA 22161, 703–605–6000. Copies may be inspected at the Office of the Federal Register, 800 North Capitol Street, NW., Suite 700, Washington, DC. A copy may also be inspected at EPA's Water Docket, 1200 Pennsylvania Ave., NW., Washington, DC 20460.

[6] Base fluid sediment toxicity ratio = 10-day LC_{50} of C_{16}–C_{18} internal olefin/10-day LC_{50} of stock base fluid as determined by ASTM E 1367–92 (specified at § 435.11(ee)) method: ''Standard Guide for Conducting 10-day Static Sediment Toxicity Tests with Marine and Estuarine Amphipods,'' 1992, after preparing the sediment according to the method specified in Appendix 3 of subpart A of this part. This incorporation by reference was approved by the Director of the Federal Register in accordance with 5 U.S.C. 552(a) and 1 CFR part 51. Copies may be obtained from the American Society for Testing and Materials, 100 Barr Harbor Drive, West Conshohocken, PA, 19428. Copies may be inspected at the Office of the Federal Register, 800 North Capitol Street, NW., Suite 700, Washington, DC. A copy may also be inspected at EPA's Water Docket, 1200 Pennsylvania Ave., NW., Washington, DC 20460.

[7] Biodegradation rate ratio = Cumulative gas production (ml) of C_{16}–C_{18} internal olefin/Cumulative gas production (ml) of stock base fluid, both at 275 days as determined by ISO 11734:1995 (specified at § 435.11(e)) method: ''Water quality—Evaluation of the 'ultimate' anaerobic biodegradability of organic compounds in digested sludge—Method by measurement of the biogas production (1995 edition)'' as modified for the marine environment (Appendix 4 of subpart A of this part). This incorporation by reference was approved by the Director of the Federal Register in accordance with 5 U.S.C. 552(a) and 1 CFR part 51. Copies may be obtained from the American National Standards Institute, 11 West 42nd Street, 13th Floor, New York, NY 10036. Copies may be inspected at the Office of the Federal Register, 800 North Capitol Street, NW., Suite 700, Washington, DC. A copy may also be inspected at EPA's Water Docket, 1200 Pennsylvania Ave., NW., Washington, DC 20460.

[8] Drilling fluid sediment toxicity ratio = 4-day LC_{50} of C_{16}–C_{18} internal olefin drilling fluid/4-day LC_{50} of drilling fluid removed from drill cuttings at the solids control equipment as determined by ASTM E 1367–92 (specified at § 435.11(ee)) method: ''Standard Guide for Conducting 10-day Static Sediment Toxicity Tests with Marine and Estuarine Amphipods,'' 1992, after preparing the sediment according to the method specified in Appendix 3 of subpart A of this part. This incorporation by reference was approved by the Director of the Federal Register in accordance with 5 U.S.C. 552(a) and 1 CFR part 51. Copies may be obtained from the American Society for Testing and Materials, 100 Barr Harbor Drive, West Conshohocken, PA, 19428. Copies may be inspected at the Office of the Federal Register, 800 North Capitol Street, NW., Suite 700, Washington, DC. A copy may also be inspected at EPA's Water Docket, 1200 Pennsylvania Ave., NW., Washington, DC 20460.

[9] As determined before drilling fluids are shipped offshore by the GC/MS compliance assurance method (Appendix 5 of subpart A of this part), and as determined prior to discharge by the RPE method (Appendix 6 of subpart A of this part) applied to drilling fluid removed from drill cuttings. If the operator wishes to confirm the results of the RPE method (Appendix 6 of subpart A of this part), the operator may use the GC/MS compliance assurance method (Appendix 5 of subpart A of this part). Results from the GC/MS compliance assurance method (Appendix 5 of subpart A of this part) shall supercede the results of the RPE method (Appendix 6 of subpart A of this part).

[10] Maximum permissible retention of non-aqueous drilling fluid (NAF) base fluid on wet drill cuttings averaged over drilling intervals using NAFs as determined by the API retort method (Appendix 7 of subpart A of this part). This limitation is applicable for NAF base fluids that meet the base fluid sediment toxicity ratio (Footnote 6), biodegradation rate ratio (Footnote 7), PAH, mercury, and cadmium stock limitations (C_{16}–C_{18} internal olefin) defined above in this table.

[11] Maximum permissible retention of non-aqueous drilling fluid (NAF) base fluid on wet drill cuttings average over drilling intervals using NAFs as determined by the API retort method (Appendix 7 of subpart A of this part). This limitation is applicable for NAF base fluids that meet the ester base fluid sediment toxicity ratio and ester biodegradation rate ratio stock limitations defined as: (a) Ester base fluid sediment toxicity ratio = 10-day LC_{50} of C_{12}–C_{14} ester or C_8 ester /10-day LC_{50} of stock base fluid as determined by ASTM E 1367–92 [specified at § 435.11(ee)] method: ''Standard Guide for Conducting 10-day Static Sediment Toxicity Tests with Marine and Estuarine Amphipods,'' 1992, after preparing the sediment according to the method specified in Appendix 3 of subpart A of this part. This incorporation by reference was approved by the Director of the Federal Register in accordance with 5 U.S.C. 552(a) and 1 CFR part 51. Copies may be obtained from the American Society for Testing and Materials, 100 Barr Harbor Drive, West Conshohocken, PA, 19428. Copies may be inspected at the Office of the Federal Register, 800 North Capitol Street, NW., Suite 700, Washington, DC. A copy may also be inspected at EPA's Water Docket, 1200 Pennsylvania Ave., NW., Washington, DC 20460; (b) Ester biodegradation rate ratio = Cumulative gas production (ml) of C_{12}–C_{14} ester or C_8 ester/Cumulative gas production (ml) of stock base fluid, both at 275 days as determined by ISO 11734:1995 (specified at § 435.11(e)) method: ''Water quality—Evaluation of the 'ultimate' anaerobic biodegradability of organic compounds in digested sludge—Method by measurement of the biogas production (1995 edition)'' as modified for the marine environment (Appendix 4 of subpart A of this part). This incorporation by reference was approved by the Director of the Federal Register in accordance with 5 U.S.C. 552(a) and 1 CFR part 51. Copies may be obtained from the American National Standards Institute, 11 West 42nd Street, 13th Floor, New York, NY 10036. Copies may be inspected at the Office of the Federal Register, 800 North Capitol Street, NW., Suite 700, Washington, DC. A copy may also be inspected at EPA's Water Docket, 1200 Pennsylvania Ave., NW., Washington, DC 20460; and (c) PAH mass ratio (Footnote 5), mercury, and cadmium stock limitations (C_{16}–C_{18} internal olefin) defined above in this table.

[58 FR 12504, Apr. 13, 1979, as amended at 66 FR 6900, Jan. 22, 2001; 66 FR 33134, June 20, 2001]

APPENDIX 1 TO SUBPART A OF PART 435—STATIC SHEEN TEST

1. Scope and Application

This method is to be used as a compliance test for the ''no discharge of free oil'' requirement for discharges of drilling fluids, drill cuttings, produced sand, and well treatment, completion and workover fluids. ''Free oil'' refers to any oil contained in a waste stream that when discharged will cause a film or sheen upon or a discoloration of the surface of the receiving water.

2. Summary of Method

15-mL samples of drilling fluids or well treatment, completion, and workover fluids, and 15-g samples (wet weight basis) of drill cuttings or produced sand are introduced into ambient seawater in a container having an air-to-liquid interface area of 1000 cm^2 (155.5 in^2). Samples are dispersed within the container and observations made no more than one hour later to ascertain if these materials cause a sheen, iridescence, gloss, or increased reflectance on the surface of the test seawater. The occurrence of any of these visual observations will constitute a demonstration that the tested material contains

''free oil,'' and therefore results in a prohibition of its discharge into receiving waters.

3. Interferences

Residual ''free oil'' adhering to sampling containers, the magnetic stirring bar used to mix the sample, and the stainless steel spatula used to mix the sample will be the principal sources of contamination problems. These problems should only occur if improperly washed and cleaned equipment are used for the test. The use of disposable equipment minimizes the potential for similar contamination from pipettes and the test container.

4. Apparatus, Materials, and Reagents

4.1 Apparatus

4.1.1 Sampling Containers: 1-liter polyethylene beakers and 1-liter glass beakers.

4.1.2 Graduated cylinder: 100-mL graduated cylinder required only for operations where predilution of mud discharges is required.

4.1.3 Plastic disposable weighing boats.

4.1.4 Triple-beam scale.

4.1.5 Disposable pipettes: 25-mL disposable pipettes.

4.1.6 Magnetic stirrer and stirring bar.

4.1.7 Stainless steel spatula.

4.1.8 Test container: Open plastic container whose internal cross-section parallel to its opening has an area of 1000 cm^2±50 cm^2 (155.5 ±7.75 in^2), and a depth of at least 13 cm (5 inches) and no more than 30 cm (11.8 inches).

4.2 Materials and Reagents.

4.2.1 Plastic liners for the test container: Oil-free, heavy-duty plastic trash can liners that do not inhibit the spreading of an oil film. Liners must be of sufficient size to completely cover the interior surface of the test container. Permittees must determine an appropriate local source of liners that do not inhibit the spreading of 0.05 mL of diesel fuel added to the lined test container under the test conditions and protocol described below.

4.2.2 Ambient receiving water.

5. Calibration

None currently specified.

6. Quality Control Procedures

None currently specified.

7. Sample Collection and Handling

7.1 Sampling containers must be thoroughly washed with detergent, rinsed a minimum of three times with fresh water, and allowed to air dry before samples are collected.

7.2 Samples of drilling fluid to be tested shall be taken at the shale shaker after cuttings have been removed. The sample volume should range between 200 mL and 500 mL.

7.3 Samples of drill cuttings will be taken from the shale shaker screens with a clean spatula or similar instrument and placed in a glass beaker. Cuttings samples shall be collected prior to the addition of any washdown water and should range between 200 g and 500 g.

7.4 Samples of produced sand must be obtained from the solids control equipment from which the discharge occurs on any given day and shall be collected prior to the addition of any washdown water; samples should range between 200 g and 500 g.

7.5 Samples of well treatment, completion, and workover fluids must be obtained from the holding facility prior to discharge; the sample volume should range between 200 mL and 500 mL.

7.6 Samples must be tested no later than 1 hour after collection.

7.7 Drilling fluid samples must be mixed in their sampling containers for 5 minutes prior to the test using a magnetic bar stirrer. If predilution is imposed as a permit condition, the sample must be mixed at the same ratio with the same prediluting water as the discharged muds and stirred for 5 minutes.

7.8 Drill cuttings must be stirred and well mixed by hand in their sampling containers prior to testing, using a stainless steel spatula.

8. Procedure

8.1 Ambient receiving water must be used as the ''receiving water'' in the test. The temperature of the test water shall be as close as practicable to the ambient conditions in the receiving water, not the room temperature of the observation facility. The test container must have an air-to-liquid interface area of 1000 ±50 cm^2. The surface of the water should be no more than 1.27 cm (.5 inch) below the top of the test container.

8.2 Plastic liners shall be used, one per test container, and discarded afterwards. Some liners may inhibit spreading of added oil; operators shall determine an appropriate local source of liners that do not inhibit the spreading of the oil film.

8.3 A 15-mL sample of drilling fluid or well treatment, completion, and workover fluids must be introduced by pipette into the test container 1 cm below the water surface. Pipettes must be filled and discharged with test material prior to the transfer of test material and its introduction into test containers. The test water/test material mixture must be stirred using the pipette to distribute the test material homogeneously throughout the test water. The pipette must be used only once for a test and then discarded.

8.4 Drill cuttings or produced sand should be weighed on plastic weighing boats; 15-g

samples must be transferred by scraping test material into the test water with a stainless steel spatula. Drill cuttings shall not be prediluted prior to testing. Also, drilling fluids and cuttings will be tested separately. The weighing boat must be immersed in the test water and scraped with the spatula to transfer any residual material to the test container. The drill cuttings or produced sand must be stirred with the spatula to an even distribution of solids on the bottom of the test container.

8.5 Observations must be made no later than 1 hour after the test material is transferred to the test container. Viewing points above the test container should be made from at least three sides of the test container, at viewing angles of approximately 60° and 30° from the horizontal. Illumination of the test container must be representative of adequate lighting for a working environment to conduct routine laboratory procedures. It is recommended that the water surface of the test container be observed under a fluorescent light source such as a dissecting microscope light. The light source shall be positioned above and directed over the entire surface of the pan.

8.6 Detection of a ''silvery'' or ''metallic'' sheen or gloss, increased reflectivity, visual color, iridescence, or an oil slick on the water surface of the test container surface shall constitute a demonstration of ''free oil.'' These visual observations include patches, streaks, or sheets of such altered surface characteristics. If the free oil content of the sample approaches or exceeds 10%, the water surface of the test container may lack color, a sheen, or iridescence, due to the increased thickness of the film; thus, the observation for an oil slick is required. The surface of the test container shall not be disturbed in any manner that reduces the size of any sheen or slick that may be present.

If an oil sheen or slick occurs on less than one-half of the surface area after the sample is introduced to the test container, observations will continue for up to 1 hour. If the sheen or slick increases in size and covers greater than one-half of the surface area of the test container during the observation period, the discharge of the material shall cease. If the sheen or slick does not increase in size to cover greater than one-half of the test container surface area after one hour of observation, discharge may continue and additional sampling is not required.

If a sheen or slick occurs on greater than one-half of the surface area of the test container after the test material is introduced, discharge of the tested material shall cease. The permittee may retest the material causing the sheen or slick. If subsequent tests do not result in a sheen or slick covering greater than one-half of the surface area of the test container, discharge may continue.

APPENDIX 2 TO SUBPART A OF PART 435—DRILLING FLUIDS TOXICITY TEST

I. Sample Collection

The collection and preservation methods for drilling fluids (muds) and water samples presented here are designed to minimize sample contamination and alteration of the physical or chemical properties of the samples due to freezing, air oxidation, or drying.

I–A Apparatus

(1) The following items are required for water and drilling mud sampling and storage:

a. Acid-rinsed linear-polyethylene bottles or other appropriate noncontaminating drilling mud sampler.

b. Acid-rinsed linear-polyethylene bottles or other appropriate noncontaminating water sampler.

c. Acid-rinsed linear-polyethylene bottles or other appropriate noncontaminated vessels for water and mud samples.

d. Ice chests for preservation and shipping of mud and water samples.

I–B. Water Sampling

(1) Collection of water samples shall be made with appropriate acid-rinsed linear-polyethylene bottles or other appropriate non-contaminating water sampling devices. Special care shall be taken to avoid the introduction of contaminants from the sampling devices and containers. Prior to use, the sampling devices and containers should be thoroughly cleaned with a detergent solution, rinsed with tap water, soaked in 10 percent hydrochloric acid (HCl) for 4 hours, and then thoroughly rinsed with glass-distilled water.

I–C. Drilling Mud Sampling

(1) Drilling mud formulations to be tested shall be collected from active field systems. Obtain a well-mixed sample from beneath the shale shaker after the mud has passed through the screens. Samples shall be stored in polyethylene containers or in other appropriate uncontaminated vessels. Prior to sealing the sample containers on the platform, flush as much air out of the container by filling it with drilling fluid sample, leaving a one inch space at the top.

(2) Mud samples shall be immediately shipped to the testing facility on blue or wet ice (do not use dry ice) and continuously maintained at 0–4 °C until the time of testing.

(3) Bulk mud samples shall be thoroughly mixed in the laboratory using a 1000 rpm high shear mixer and then subdivided into individual, small wide-mouthed (e.g., one or two liter) non-contaminating containers for storage.

(4) The drilling muds stored in the laboratory shall have any excess air removed by flushing the storage containers with nitrogen under pressure anytime the containers are opened. Moreover, the sample in any container opened for testing must be thoroughly stirred using a 1000 rpm high shear mixer prior to use.

(5) Most drilling mud samples may be stored for periods of time longer than 2 weeks prior to toxicity testing provided that proper containers are used and proper condition are maintained.

II. Suspended Particulate Phase Sample Preparation

(1) Mud samples that have been stored under specified conditions in this protocol shall be prepared for tests within three months after collection. The SPP shall be prepared as detailed below.

II–-A Apparatus

(1) The following items are required:

a. Magnetic stir plates and bars.

b. Several graduated cylinders, ranging in volume from 10 mL to 1 L

c. Large (15 cm) powder funnels.

d. Several 2-liter graduated cylinders.

e. Several 2-liter large mouth graduated Erlenmeyer flasks.

(2) Prior to use, all glassware shall be thoroughly cleaned. Wash all glassware with detergent, rinse five times with tap water, rinse once with acetone, rinse several times with distilled or deionized water, place in a clean 10-percent (or stronger) HCl acid bath for a minimum of 4 hours, rinse five times with tap water, and then rinse five times with distilled or deionized water. For test samples containing mineral oil or diesel oil, glassware should be washed with petroleum ether to assure removal of all residual oil.

NOTE: If the glassware with nytex cups soaks in the acid solution longer than 24 hours, then an equally long deionized water soak should be performed.

II–B Test Seawater Sample Preparation

(1) Diluent seawater and exposure seawater samples are prepared by filtration through a 1.0 micrometer filter prior to analysis.

(2) Artificial seawater may be used as long as the seawater has been prepared by standard methods or ASTM methods, has been properly ''seasoned,'' filtered, and has been diluted with distilled water to the same specified 20±2 ppt salinity and 20±2 °C temperature as the ''natural'' seawater.

II–C Sample Preparation

(1) The pH of the mud shall be tested prior to its use. If the pH is less than 9, if black spots have appeared on the walls of the sample container, or if the mud sample has a foul odor, that sample shall be discarded. Subsample a manageable aliquot of mud from the well-mixed original sample. Mix the mud and filtered test seawater in a volumetric mud-to-water ratio of 1 to 9. This is best done by the method of volumetric displacement in a 2–L, large mouth, graduated Erlenmeyer flask. Place 1000 mL of seawater into the graduated Erlenmeyer flask. The mud subsample is then carefully added via a powder funnel to obtain a total volume of 1200 mL. (A 200 mL volume of the mud will now be in the flask).

The 2–L, large mouth, graduated Erlenmeyer flask is then filled to the 2000 mL mark with 800 mL of seawater, which produces a slurry with a final ratio of one volume drilling mud to nine volumes water. If the volume of SPP required for testing or analysis exceeds 1500 to 1600 mL, the initial volumes should be proportionately increased. Alternatively, several 2–L drill mud/water slurries may be prepared as outlined above and combined to provide sufficient SPP.

(2) Mix this mud/water slurry with magnetic stirrers for 5 minutes. Measure the pH and, if necessary, adjust (decrease) the pH of the slurry to within 0.2 units of the seawater by adding 6N HCl while stirring the slurry. Then, allow the slurry to settle for 1 hour. Record the amount of HCl added.

(3) At the end of the settling period, carefully decant (do not siphon) the Suspended Particulate Phase (SPP) into an appropriate container. Decanting the SPP is one continuous action. In some cases no clear interface will be present; that is, there will be no solid phase that has settled to the bottom. For those samples the entire SPP solution should be used when preparing test concentrations. However, in those cases when no clear interface is present, the sample must be remixed for five minutes. This insures the homogeneity of the mixture prior to the preparation of the test concentrations. In other cases, there will be samples with two or more phases, including a solid phase. For those samples, carefully and continuously decant the supernatant until the solid phase on the bottom of the flask is reached. The decanted solution is defined to be 100 percent SPP. Any other concentration of SPP refers to a percentage of SPP that is obtained by volumetrically mixing 100 percent SPP with seawater.

(4) SPP samples to be used in toxicity tests shall be mixed for 5 minutes and must not be preserved or stored.

(5) Measure the filterable and unfilterable residue of each SPP prepared for testing. Measure the dissolved oxygen (DO) and pH of the SPP. If the DO is less than 4.9 ppm, aerate the SPP to at least 4.9 ppm which is 65 percent of saturation. Maximum allowable aeration time is 5 minutes using a generic commercial air pump and air stone. Neutralize the pH of the SPP to a pH 7.8±.1 using

a dilute HCl solution. If too much acid is added to lower the pH saturated NaOH may be used to raise the pH to 7.8±.1 units. Record the amount of acid or NaOH needed to lower/raise to the appropriate pH. Three repeated DO and pH measurements are needed to insure homogeneity and stability of the SPP. Preparation of test concentrations may begin after this step is complete.

(6) Add the appropriate volume of 100 percent SPP to the appropriate volume of seawater to obtain the desired SPP concentration. The control is seawater only. Mix all concentrations and the control for 5 minutes by using magnetic stirrers. Record the time; and, measure DO and pH for Day 0. Then, the animals shall be randomly selected and placed in the dishes in order to begin the 96-hour toxicity test.

III. Guidance for Performing Suspended Particulate Phase Toxicity Tests Using Mysidopsis bahia

III–A Apparatus

(1) Items listed by Borthwick [1] are required for each test series, which consists of one set of control and test containers, with three replicates of each.

III–B Sample Collection Preservation

(1) Drilling muds and water samples are collected and stored, and the suspended particulate phase prepared as described in section 1–C.

III–C Species Selection

(1) The Suspended Particulate Phase (SPP) tests on drilling muds shall utilize the test species *Mysidopsis bahia*. Test animals shall be 3 to 6 days old on the first day of exposure. Whatever the source of the animals, collection and handling should be as gentle as possible. Transportation to the laboratory should be in well-aerated water from the animal culture site at the temperature and salinity from which they were cultured. Methods for handling, acclimating, and sizing bioassay organisms given by Borthwick [1] and Nimmo [2] shall be followed in matters for which no guidance is given here.

III–D Experimental Conditions

(1) Suspended particulate phase (SPP) tests should be conducted at a salinity of 20±2 ppt. Experimental temperature should be 20±2 °C. Dissolved oxygen in the SPP shall be raised to or maintained above 65 percent of saturation prior to preparation of the test concentrations. Under these conditions of temperature and salinity, 65 percent saturation is a DO of 5.3 ppm. Beginning at Day 0-before the animals are placed in the test containers DO, temperature, salinity, and pH shall be measured every 24 hours. DO should be reported in milligrams per liter.

(2) Aeration of test media is required during the entire test with a rate estimated to be 50–140 cubic centimeters/minute. This air flow to each test dish may be achieved through polyethylene tubing (0.045-inch inner diameter and 0.062-inch outer diameter) by a small generic aquarium pump. The delivery method, surface area of the aeration stone, and flow characteristics shall be documented. All treatments, including control, shall be the same.

(3) Light intensity shall be 1200 microwatts/cm^2 using cool white fluorescent bulbs with a 14-hr light and 10-hr dark cycle. This light/dark cycle shall also be maintained during the acclimation period and the test.

III–E Experimental Procedure

(1) Wash all glassware with detergent, rinse five times with tap water, rinse once with acetone, rinse several times with distilled or deionized water, place in a clean 10 percent HCl acid bath for a minimum of 4 hours, rinse five times with tap water, and then rinse five times with distilled water.

(2) Establish the definitive test concentration based on results of a range finding test. A minimum of five test concentrations plus a negative and positive (reference toxicant) control is required for the definitive test. To estimate the LC–50, two concentrations shall be chosen that give (other than zero and 100 percent) mortality above and below 50 percent.

(3) Twenty organisms are exposed in each test dish. Nytex® cups shall be inserted into every test dish prior to adding the animals. These ''nylon mesh screen'' nytex holding cups are fabricated by gluing a collar of 363-micrometer mesh nylon screen to a 15-centimeter wide Petri dish with silicone sealant. The nylon screen collar is approximately 5 centimeters high. The animals are then placed into the test concentration within the confines of the Nytex cups.

(4) Individual organisms shall be randomly assigned to treatment. A randomization procedure is presented in section V of this protocol. Make every attempt to expose animals of approximately equal size. The technique described by Borthwick [1], or other suitable substitutes, should be used for transferring specimens. Throughout the test period, mysids shall be fed daily with approximately 50 *Artemia* (brine shrimp) nauplii per mysid. This will reduce stress and decrease cannibalism.

(5) Cover the dishes, aerate, and incubate the test containers in an appropriate test chamber. Positioning of the test containers holding various concentrations of test solution should be randomized if incubator arrangement indicates potential position difference. The test medium is not replaced during the 96-hour test.

(6) Observations may be attempted at 4, 6 and 8 hours; they must be attempted at 0, 24, 48, and 72 hours and must be made at 96 hours. Attempts at observations refers to placing a test dish on a light table and visually counting the animals. Do not lift the ''nylon mesh screen'' cup out of the test dish to make the observation. No unnecessary handling of the animals should occur during the 96 hour test period. DO and pH measurements must also be made at 0, 24, 48, 72, and 96 hours. Take and replace the test medium necessary for the DO and pH measurements outside of the nytex cups to minimize stresses on the animals.

(7) At the end of 96 hours, all live animals must be counted. Death is the end point, so the number of living organisms is recorded. Death is determined by lack of spontaneous movement. All crustaceans molt at regular intervals, shedding a complete exoskeleton. Care should be taken not to count an exoskeleton. Dead animals might decompose or be eaten between observations. Therefore, always count living, not dead animals. If daily observations are made, remove dead organisms and molted exoskeletons with a pipette or forceps. Care must be taken not to disturb living organisms and to minimize the amount of liquid withdrawn.

IV. Methods for Positive Control Tests (Reference Toxicant)

(1) Sodium lauryl sulfate (dodecyl sodium sulfate) is used as a reference toxicant for the positive control. The chemical used should be approximately 95 percent pure. The source, lot number, and percent purity shall be reported.

(2) Test methods are those used for the drilling fluid tests, except that the test material was prepared by weighing one gram sodium lauryl sulfate on an analytical balance, adding the chemical to a 100-milliliter volumetric flask, and bringing the flask to volume with deionized water. After mixing this stock solution, the test mixtures are prepared by adding 0.1 milliliter of the stock solution for each part per million desired to one liter of seawater.

(3) The mixtures are stirred briefly, water quality is measured, animals are added to holding cups, and the test begins. Incubation and monitoring procedures are the same as those for the drilling fluids.

V. Randomization Procedure

V–A Purpose and Procedure

(1) The purpose of this procedure is to assure that mysids are impartially selected and randomly assigned to six test treatments (five drilling fluid or reference toxicant concentrations and a control) and impartially counted at the end of the 96-hour test. Thus, each test setup, as specified in the randomization procedure, consists of 3 replicates of 20 animals for each of the six treatments, i.e., 360 animals per test. Figure 1 is a flow diagram that depicts the procedure schematically and should be reviewed to understand the over-all operation. The following tasks shall be performed in the order listed.

(2) Mysids are cultured in the laboratory in appropriate units. If mysids are purchased, go to Task 3.

(3) Remove mysids from culture tanks (6, 5, 4, and 3 days before the test will begin, i.e. Tuesday, Wednesday, Thursday, and Friday if the test will begin on Monday) and place them in suitably large maintenance containers so that they can swim about freely and be fed.

NOTE: Not every detail (the definition of suitably large containers, for example) is provided here. Training and experience in aquatic animal culture and testing will be required to successfully complete these tests.

Figure 1
Mysid Randomization Procedure

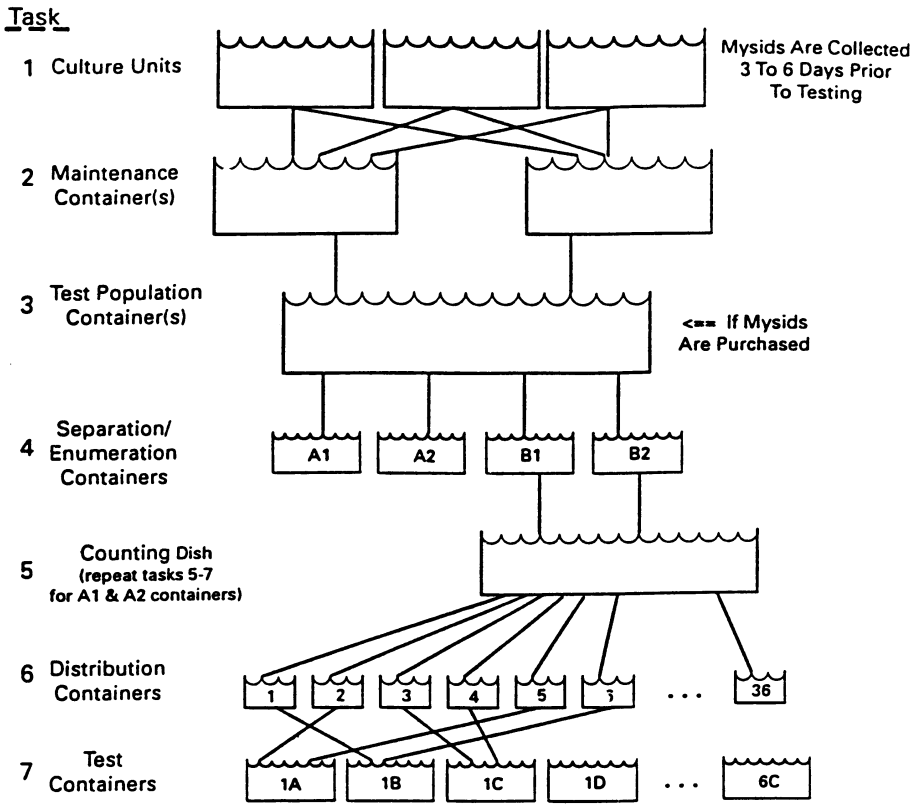

(4) Remove mysids from maintenance containers and place all animals in a single container. The intent is to have homogeneous test population of mysids of a known age (3–6 days old).

(5) For each toxicity test, assign two suitable containers (500-milliliter (mL) beakers are recommended) for mysid separation/enumeration. Label each container (A1, A2, B1, B2, and C1, C2, for example, if two drilling fluid tests and a reference toxicant test are to be set up on one day). The purpose of this task is to allow the investigator to obtain a close estimate of the number of animals available for testing and to prevent unnecessary crowding of the mysids while they are being counted and assigned to test containers. Transfer the mysids from the large test population container to the labeled separation and enumeration containers but do not place more than 200 mysids in a 500-mL beaker. Be impartial in transferring the mysids; place approximately equal numbers of animals (10–15 mysids is convenient) in each container in a cyclic manner rather than placing the maximum number each container at one time.

NOTE: It is important that the animals not be unduly stressed during this selection and assignment procedure. Therefore, it will probably be necessary to place all animals (except the batch immediately being assigned to test containers) in mesh cups with flowing seawater or in large volume containers with aeration. The idea is to provide the animals with near optimal conditions to avoid additional stress.

(6) Place the mysids from the two labeled enumeration containers assigned to a specific test into one or more suitable containers to be used as counting dishes (2-liter Carolina dishes are suggested). Because of the time required to separate, count, and assign mysids, two or more people may be involved in completing this task. If this is done, two or more counting dishes may be used, but the investigator must make sure that approximately equal numbers of mysids from each labeled container are placed in each counting dish.

(7) By using a large-bore, smooth-tip glass pipette, select mysids from the counting dish(es) and place them in the 36 individually numbered distribution containers (10-ml beakers are suggested). The mysids are assigned two at a time to the 36 containers by using a randomization schedule similar to the one presented below. At the end of selection/assignment round 1, each container will contain two mysids; at the end of round 2, they will contain four mysids; and so on until each contains ten mysids.

EXAMPLE OF A RANDOMIZATION SCHEDULE

Selection/assignment round (2 mysids each)	Place mysid in the numbered distribution containers in the random order shown
1	8, 21, 6, 28, 33, 32, 1, 3, 10, 9, 4, 14, 23, 2, 34, 22, 36, 27, 5, 30, 35, 24, 12, 25, 11, 17, 19, 26, 31, 7, 20, 15, 18, 13, 16, 29.
2	35, 18, 5, 12, 32, 34, 22, 3, 9, 16, 26, 13, 20, 28, 6, 21, 24, 30, 8, 31, 7, 23, 2, 15, 25, 17, 1, 11, 27, 4, 19, 36, 10, 33, 14, 29.
3	7, 19, 14, 11, 34, 21, 25, 27, 17, 18, 6, 16, 29, 2, 32, 10, 4, 20, 3, 9, 1, 5, 28, 24, 31, 15, 22, 13, 33, 26, 36, 12, 8, 30, 35, 23.
4	30, 2, 18, 5, 8, 27, 10, 25, 4, 20, 26, 15, 31, 36, 35, 23, 11, 29, 16, 17, 28, 1, 33, 14, 9, 34, 7, 3, 12, 22, 21, 6, 19, 24, 32, 13.
5	34, 28, 16, 17, 10, 12, 1, 36, 20, 18, 15, 22, 2, 4, 19, 23, 27, 29, 25, 21, 30, 3, 9, 33, 32, 6, 14, 11, 35, 24, 26, 7, 31, 5, 13, 8.

(8) Transfer mysids from the 36 distribution containers to 18 labeled test containers in random order. A label is assigned to each of the three replicates (A, B, C) of the six test concentrations. Count and record the 96 hour response in an impartial order.

(9) Repeat tasks 5–7 for each toxicity test. A new random schedule should be followed in Tasks 6 and 7 for each test.

NOTE: If a partial toxicity test is conducted, the procedures described above are appropriate and should be used to prepare the single test concentration and control, along with the reference toxicant test.

V–B. Data Analysis and Interpretation

(1) Complete survival data in all test containers at each observation time shall be presented in tabular form. If greater than 10 percent mortality occurs in the controls, all data shall be discarded and the experiment repeated. Unacceptably high control mortality indicates the presence of important stresses on the organisms other than the material being tested, such as injury or disease, stressful physical or chemical conditions in the containers, or improper handling, acclimation, or feeding. If 10 percent mortality or less occurs in the controls, the data may be evaluated and reported.

(2) A definitive, full bioassay conducted according to the EPA protocol is used to estimate the concentration that is lethal to 50 percent of the test organisms that do not die naturally. This toxicity measure is known as the median lethal concentration, or LC–50. The LC–50 is adjusted for natural mortality or natural responsiveness. The maximum likelihood estimation procedure with the adjustments for natural responsiveness as given by D.J. Finney, in *Probit Analysis* 3rd edition, 1971, Cambridge University Press, chapter 7, can be used to obtain the probit model estimate of the LC–50 and the 95 percent fiducial (confidence) limits for the LC–50. These estimates are obtained using the logarithmic transform of the concentration. The heterogeneity factor (Finney 1971, pages 70–72) is not used. For a test material to pass the toxicity test, according to the requirements stated in the offshore oil and gas extraction industry BAT effluent limitations and NSPS, the LC–50, adjusted for natural responsiveness, must be greater than 3 percent suspended particulate phase (SPP) concentration by volume unadjusted for the 1 to 9 dilution. Other toxicity test models may be used to obtain toxicity estimates provided the modeled mathematical expression for the lethality rate must increase continuously with concentration. The lethality rate is modeled to increase with concentration to reflect an assumed increase in toxicity with concentration even though the observed lethality may not increase uniformly because of the unpredictable animal response fluctuations.

(3) The range finding test is used to establish a reasonable set of test concentrations in order to run the definitive test. However, if the lethality rate changes rapidly over a narrow range of concentrations, the range finding assay may be too coarse to establish

an adequate set of test concentrations for a definitive test.

(4) The EPA Environmental Research Laboratory in Gulf Breeze, Florida prepared a Research and Development Report entitled Acute Toxicity of Eight Drilling Fluids to Mysid Shrimp (*Mysidopsis bahia*), May 1984 EPA–600/3–84–067. The Gulf Breeze data for drilling fluid number 1 are displayed in Table 1 for purposes of an example of the probit analysis described above. The SAS Probit Procedure (SAS Institute, Statistical Analysis System, Cary, North Carolina, 1982) was used to analyze these data. The 96-hour LC50 adjusted for the estimated spontaneous mortality rate is 3.3 percent SPP with 95 percent limits of 3.0 and 3.5 percent SPP with the 1 to 9 dilution. The estimated spontaneous mortality rate based on all of the data is 9.6 percent.

TABLE 1.—LISTING OF ACUTE TOXICITY TEST DATA (AUGUST 1983 TO SEPTEMBER 1983) WITH EIGHT GENERIC DRILLING FLUIDS AND MYSID SHRIMP

[fluid N2=1]

Percent concentration	Number exposed	Number dead (96 hours)	Number alive (96 hours)
0	60	3	57
1	60	11	49
2	60	11	49
3	60	25	35
4	60	48	12
5	60	60	0

V–C. The Partial Toxicity Test for Evaluation of Test Material

(1) A partial test conducted according to EPA protocol can be used economically to demonstrate that a test material passes the toxicity test. The partial test cannot be used to estimate the LC–50 adjusted for natural response.

(2) To conduct a partial test follow the test protocol for preparation of the test material and organisms. Prepare the control (zero concentration), one test concentration (3 percent suspended particulate phase) and the reference toxicant according to the methods of the full test. A range finding test is not used for the partial test.

(3) Sixty test organisms are used for each test concentration. Find the number of test organisms killed in the control (zero percent SPP) concentration in the column labeled X_0 of Table 2. If the number of organisms in the control (zero percent SPP) exceeds the table values, then the test is unacceptable and must be repeated. If the number of organisms killed in the 3 percent test concentration is less than or equal to corresponding number in the column labeled X_1 then the test material passes the partial toxicity test. Otherwise the test material fails the toxicity test.

(4) Data shall be reported as percent suspended particulate phase.

TABLE 2

X_0	X_1
0	22
1	22
2	23
3	23
4	24
5	24
6	25

VI. References

1. Borthwick, Patrick W. 1978. Methods for acute static toxicity tests with mysid shrimp (*Mysidopsis bahia*). Bioassay Procedures for the Ocean Disposal Permit Program, [EPA–600/9–78–010:] March.

2. Nimmo, D.R., T.L. Hamaker, and C.A. Somers. 1978. Culturing the mysid (*Mysidopsis bahia*) in flowing seawater or a static system. Bioassay Procedures for the Ocean Disposal Permit Program, [EPA–600/9–78–010]: March.

3. American Public Health Association et al. 1980. Standard Methods for the Examination of Water and Wastewater. Washington, DC, 15th Edition: 90–99.

4. U.S. Environmental Protection Agency, September 1991. Methods for Measuring the Acute Toxicity of Effluents and Receiving Waters to Freshwater and Marine Organisms. EPA/600/4–90/027. Washington, DC, 4th Edition.

5. Finney, D.J. Probit Analysis. Cambridge University Press; 1971.

6. U.S. Environmental Protection Agency, May 1984. Acute Toxicity of Eight Drilling Fluids to Mysid Shrimp (*Mysidopsis bahia*). EPA–600/3–84–067.

APPENDIX 3 TO SUBPART A OF PART 435—PROCEDURE FOR MIXING BASE FLUIDS WITH SEDIMENTS

This procedure describes a method for amending uncontaminated and nontoxic (control) sediments with the base fluids that are used to formulate synthetic-based drilling fluids and other non-aqueous drilling fluids. Initially, control sediments shall be press-sieved through a 2000 micron mesh sieve to remove large debris. Then press-sieve the sediment through a 500 micron sieve to remove indigenous organisms that may prey on the test species or otherwise confound test results. Homogenize control sediment to limit the effects of settling that may have occurred during storage. Sediments should be homogenized before density determinations and addition of base fluid to control sediment. Because base fluids are

strongly hydrophobic and do not readily mix with sediment, care must be taken to ensure base fluids are thoroughly homogenized within the sediment. All concentrations are weight-to-weight (mg of base fluid to kg of dry control sediment). Sediment and base fluid mixing shall be accomplished by using the following method.

1. Determine the wet to dry ratio for the control sediment by weighing approximately 10 g subsamples of the screened and homogenized wet sediment into tared aluminum weigh pans. Dry sediment at 105 °C for 18–24 h. Remove sediment and cool in a desiccator until a constant weight is achieved. Reweigh the samples to determine the dry weight. Determine the wet/dry ratio by dividing the net wet weight by the net dry weight:

[Wet Sediment Weight (g)]/[Dry Sediment Weight (g)] = Wet to Dry Ratio [1]

2. Determine the density (g/mL) of the wet control or dilution sediment. This shall be used to determine total volume of wet sediment needed for the various test treatments.

[Mean Wet Sediment Weight (g)]/[Mean Wet Sediment Volume (mL)] = Wet Sediment Density (g/mL) [2]

3. To determine the amount of base fluid needed to obtain a test concentration of 500 mg base fluid per kg dry sediment use the following formulas:

Determine the amount of wet sediment required:

[Wet Sediment Density (g/mL)] × [Volume of Sediment Required per Concentration (mL)] = Weight Wet Sediment Required per Conc. (g) [3]

Determine the amount of dry sediment in kilograms (kg) required for each concentration:

{[Wet Sediment per Concentration (g)]/[Mean Wet to Dry Ratio]} × (1kg/1000g) = Dry Weight Sediment (kg) [4]

Finally, determine the amount of base fluid required to spike the control sediment at each concentration:

[Conc. Desired (mg/kg)] × [Dry Weight Sediment (kg)] = Base Fluid Required (mg) [5]

For spiking test substances other than pure base fluids (*e.g.*, whole mud formulations), determine the spike amount as follows:

[Conc. Desired (mL/kg)] × [Dry Weight Sediment (kg)] × [Test Substance Density (g/mL)] = Test Substance Required (g) [6]

4. For primary mixing, place appropriate amounts of weighed base fluid into stainless mixing bowls, tare the vessel weight, then add sediment and mix with a high-shear dispersing impeller for 9 minutes. The concentration of base fluid in sediment from this mix, rather than the nominal concentration, shall be used in calculating LC_{50} values.

5. Tests for homogeneity of base fluid in sediment are to be performed during the procedure development phase. Because of difficulty of homogeneously mixing base fluid with sediment, it is important to demonstrate that the base fluid is evenly mixed with sediment. The sediment shall be analyzed for total petroleum hydrocarbons (TPH) using EPA Methods 3550A and 8015M, with samples taken both prior to and after distribution to replicate test containers. Base-fluid content is measured as TPH. After mixing the sediment, a minimum of three replicate sediment samples shall be taken prior to distribution into test containers. After the test sediment is distributed to test containers, an additional three sediment samples shall be taken from three test containers to ensure proper distribution of base fluid within test containers. Base-fluid content results shall be reported within 48 hours of mixing. The coefficient of variation (CV) for the replicate samples must be less than 20%. If base-fluid content results are not within the 20% CV limit, the test sediment shall be remixed. Tests shall not begin until the CV is determined to be below the maximum limit of 20%. During the test, a minimum of three replicate containers shall be sampled to determine base-fluid content during each sampling period.

6. Mix enough sediment in this way to allow for its use in the preparation of all test concentrations and as a negative control. When commencing the sediment toxicity test, range-finding tests may be required to determine the concentrations that produce a toxic effect if these data are otherwise unavailable. The definitive test shall bracket the LC_{50}, which is the desired endpoint. The results for the base fluids shall be reported in mg of base fluid per kg of dry sediment.

REFERENCES

American Society for Testing and Materials (ASTM). 1996. Standard Guide for Collection, Storage, Characterization, and Manipulation of Sediments for Toxicological Testing. ASTM E 1391–94. Annual Book of ASTM Standards, Volume 11.05, pp. 805–825.

Ditsworth, G.R., D.W. Schults and J.K.P. Jones. 1990. Preparation of benthic substrates for sediment toxicity testing, Environ. Toxicol. Chem. 9:1523–1529.

Suedel, B.C., J.H. Rodgers, Jr. and P.A. Clifford. 1993. Bioavailability of fluoranthene in freshwater sediment toxicity tests. Environ. Toxicol. Chem. 12:155–165.

U.S. EPA. 1994. Methods for Assessing the Toxicity of Sediment-associated Contaminants with Estuarine and Marine Amphipods. EPA/600/R–94/025. Office of Research and Development, Washington, DC.

[66 FR 6901, Jan. 22, 2001]

APPENDIX 4 TO SUBPART A OF PART 435—DETERMINATION OF BIODEGRADATION OF SYNTHETIC BASE FLUIDS IN A MARINE CLOSED BOTTLE TEST SYSTEM: SUMMARY OF MODIFICATIONS TO ISO 11734:1995

The six modifications specified in this Appendix shall apply to the determination of the biodegradability of synthetic base fluids as measured by ISO 11734:1995. These modifications make the test more applicable to a marine environment and are listed below:

1. The laboratory shall use sea water in place of freshwater media.

1.1 The sea water may be either natural or synthetic. The allowable salinity range is 20–30 ppt.

1.2 To reduce the shock to the microorganisms in the sediment, the salinity of the sediment's porewater shall be between 20–30 ppt.

2. The laboratory shall use natural marine or estuarine sediments in place of digested sludge as an inoculum. The VS of the sediments must be no less than 2%.

2.1 Sediment should be used for testing as soon as possible after field collection. If required, the laboratory can store the sediment for a maximum period of two months prior to use. The test sediment shall be stored in the dark at 4 °C.

2.2 The laboratory shall use the sediment mixing procedure specified in Appendix 3 to Subpart A of part 435 to spike the test sediment with base fluids. The final concentration will be 2000 mg carbon/Kg dry weight sediment. No less than 25 g dry weight of the spiked sediment shall be used per 125 ml serum bottle. The volume of sediment and seawater in the bottle shall be 75 ml.

3. The temperature of incubation shall be 29±1 °C.

4. The pH is maintained at the level of natural sea water, not at 7.0 as referenced in ISO 11734:1995.

5. The optional use of a trace metals solution as specified in method ISO 11734:1995 shall not be used as part of these test modifications.

6. The laboratory shall conduct the test for 275 days. The laboratory may seek approval of alternate test durations under the approval procedures specified at 40 CFR 136.4 and 136.5. Any modification of this method, beyond those expressly permitted, shall be considered a major modification subject to application and approval of alternate test procedures under 40 CFR 136.4 and 136.5.

[66 FR 6901, Jan. 22, 2001]

APPENDIX 5 TO SUBPART A OF PART 435—DETERMINATION OF CRUDE OIL CONTAMINATION IN NON-AQUEOUS DRILLING FLUIDS BY GAS CHROMATOGRAPHY/MASS SPECTROMETRY (GC/MS)

1.0 SCOPE AND APPLICATION

1.1 This method determines crude (formation) oil contamination, or other petroleum oil contamination, in non-aqueous drilling fluids (NAFs) by comparing the gas chromatography/mass spectrometry (GC/MS) fingerprint scan and extracted ion scans of the test sample to that of an uncontaminated sample.

1.2 This method can be used for monitoring oil contamination of NAFs or monitoring oil contamination of the base fluid used in the NAF formulations.

1.3 Any modification of this method beyond those expressly permitted shall be considered as a major modification subject to application and approval of alternative test procedures under 40 CFR 136.4 and 136.5.

1.4 The gas chromatography/mass spectrometry portions of this method are restricted to use by, or under the supervision of analysts experienced in the use of GC/MS and in the interpretation of gas chromatograms and extracted ion scans. Each laboratory that uses this method must generate acceptable results using the procedures described in Sections 7, 9.2, and 12 of this appendix.

2.0 SUMMARY OF METHOD

2.1 Analysis of NAF for crude oil contamination is a step-wise process. The analyst first performs a qualitative assessment of the presence or absence of crude oil in the sample. If crude oil is detected during this qualitative assessment, the analyst must perform a quantitative analysis of the crude oil concentration.

2.2 A sample of NAF is centrifuged to obtain a solids free supernate.

2.3 The test sample is prepared by removing an aliquot of the solids free supernate, spiking it with internal standard, and analyzing it using GC/MS techniques. The components are separated by the gas chromatograph and detected by the mass spectrometer.

2.4 Qualitative identification of crude oil contamination is performed by comparing the Total Ion Chromatograph (TIC) scans and Extracted Ion Profile (EIP) scans of test sample to that of uncontaminated base fluids, and examining the profiles for chromatographic signatures diagnostic of oil contamination.

2.5 The presence or absence of crude oil contamination observed in the full scan profiles and selected extracted ion profiles determines further sample quantitation and reporting requirements.

2.6 If crude oil is detected in the qualitative analysis, quantitative analysis must be performed by calibrating the GC/MS using a designated NAF spiked with known concentrations of a designated oil.

2.7 Quality is assured through reproducible calibration and testing of GC/MS system and through analysis of quality control samples.

3.0 Definitions

3.1 A NAF is one in which the continuous— phase is a water immiscible fluid such as an oleaginous material (e.g., mineral oil, enhance mineral oil, paraffinic oil, or synthetic material such as olefins and vegetable esters).

3.2 TIC—Total Ion Chromatograph.

3.3 EIP—Extracted Ion Profile.

3.4 TCB—1,3,5-trichlorobenzene is used as the internal standard in this method.

3.5 SPTM—System Performance Test Mix standards are used to establish retention times and monitor detection levels.

4.0 Interferences and Limitations

4.1 Solvents, reagents, glassware, and other sample processing hardware may yield artifacts and/or elevated baselines causing misinterpretation of chromatograms.

4.2 All Materials used in the analysis shall be demonstrated to be free from interferences by running method blanks. Specific selection of reagents and purification of solvents by distillation in all-glass systems may be required.

4.3 Glassware shall be cleaned by rinsing with solvent and baking at 400 °C for a minimum of 1 hour.

4.4 Interferences may vary from source to source, depending on the diversity of the samples being tested.

4.5 Variations in and additions of base fluids and/or drilling fluid additives (emulsifiers, dispersants, fluid loss control agents, etc.) might also cause interferences and misinterpretation of chromatograms.

4.6 Difference in light crude oils, medium crude oils, and heavy crude oils will result in different responses and thus different interpretation of scans and calculated percentages.

5.0 Safety

5.1 The toxicity or carcinogenicity of each reagent used in this method has not been precisely determined; however each chemical shall be treated as a potential health hazard. Exposure to these chemicals should be reduced to the lowest possible level.

5.2 Unknown samples may contain high concentration of volatile toxic compounds. Sample containers should be opened in a hood and handled with gloves to prevent exposure. In addition, all sample preparation should be conducted in a fume hood to limit the potential exposure to harmful contaminates.

5.3 This method does not address all safety issues associated with its use. The laboratory is responsible for maintaining a safe work environment and a current awareness file of OSHA regulations regarding the safe handling of the chemicals specified in this method. A reference file of material safety data sheets (MSDSs) shall be available to all personnel involved in these analyses. Additional references to laboratory safety can be found in References 16.1 through 16.3.

5.4 NAF base fluids may cause skin irritation, protective gloves are recommended while handling these samples.

6.0 Apparatus and Materials

Note: Brand names, suppliers, and part numbers are for illustrative purposes only. No endorsement is implied. Equivalent performance may be achieved using apparatus and materials other than those specified here, but demonstration of equivalent performance meeting the requirements of this method is the responsibility of the laboratory.

6.1 Equipment for glassware cleaning.

6.1.1 Laboratory sink with overhead fume hood.

6.1.2 Kiln—Capable of reaching 450 °C within 2 hours and holding 450 °C within ±10 °C, with temperature controller and safety switch (Cress Manufacturing Co., Santa Fe Springs, CA B31H or X31TS or equivalent).

6.2 Equipment for sample preparation.

6.2.1 Laboratory fume hood.

6.2.2 Analytical balance—Capable of weighing 0.1 mg.

6.2.3 Glassware.

6.2.3.1 Disposable pipettes—Pasteur, 150 mm long by 5 mm ID (Fisher Scientific 13–678–6A, or equivalent) baked at 400 °C for a minimum of 1 hour.

6.2.3.2 Glass volumetric pipettes or gas tight syringes—1.0-mL ± 1% and 0.5-mL ± 1%.

6.2.3.3 Volumetric flasks—Glass, class A, 10-mL, 50-mL and 100-mL.

6.2.3.4—Sample vials—Glass, 1- to 3-mL (baked at 400 °C for a minimum of 1 hour) with PTFE-lined screw or crimp cap.

6.2.3.5 Centrifuge and centrifuge tubes—Centrifuge capable of 10,000 rpm, or better, (International Equipment Co., IEC Centra MP4 or equivalent) and 50-mL centrifuge tubes (Nalgene, Ultratube, Thin Wall 25×89 mm, #3410–2539).

6.3 Gas Chromatograph/Mass Spectrometer (GC/MS):

6.3.1 Gas Chromatograph—An analytical system complete with a temperature-programmable gas chromatograph suitable for split/splitless injection and all required accessories, including syringes, analytical columns, and gases.

6.3.1.1 Column—30 m (or 60 m) × 0.32 mm ID (or 0.25 mm ID) 1μm film thickness (or 0.25μm film thickness) silicone-coated fused-silica capillary column (J&W Scientific DB–5 or equivalent).

6.3.2 Mass Spectrometer—Capable of scanning from 35 to 500 amu every 1 sec or less, using 70 volts (nominal) electron energy in the electron impact ionization mode (Hewlett Packard 5970MS or comparable).

6.3.3 GC/MS interface—the interface is a capillary-direct interface from the GC to the MS.

6.3.4—Data system—A computer system must be interfaced to the mass spectrometer. The system must allow the continuous acquisition and storage on machine-readable media of all mass spectra obtained throughout the duration of the chromatographic program. The computer must have software that can search any GC/MS data file for ions of a specific mass and that can plot such ion abundance versus retention time or scan number. This type of plot is defined as an Extracted Ion Current Profile (EIP). Software must also be available that allows integrating the abundance in any total ion chromatogram (TIC) or EIP between specified retention time or scan-number limits. It is advisable that the most recent version of the EPA/NIST Mass Spectral Library be available.

7.0 Reagents and Standards

7.1 Methylene chloride—Pesticide grade or equivalent. Use when necessary for sample dilution.

7.2 Standards—Prepare from pure individual standard materials or purchase as certified solutions. If compound purity is 96% or greater, the weight may be used without correction to compute the concentration of the standard.

7.2.1 Crude Oil Reference—Obtain a sample of a crude oil with a known API gravity. This oil shall be used in the calibration procedures.

7.2.2 Synthetic Base Fluid—Obtain a sample of clean internal olefin (IO) Lab drilling fluid (as sent from the supplier—has not been circulated downhole). This drilling fluid shall be used in the calibration procedures.

7.2.3 Internal standard—Prepare a 0.01 g/mL solution of 1,3,5-trichlorobenzene (TCB). Dissolve 1.0 g of TCB in methylene chloride and dilute to volume in a 100-mL volumetric flask. Stopper, vortex, and transfer the solution to a 150-mL bottle with PTFE-lined cap. Label appropriately, and store at –5 °C to 20 °C. Mark the level of the meniscus on the bottle to detect solvent loss.

7.2.4 GC/MS system performance test mix (SPTM) standards—The SPTM standards shall contain octane, decane, dodecane, tetradecane, tetradecene, toluene, ethylbenzene, 1,2,4-trimethylbenzene, 1-methylnaphthalene and 1,3-dimethylnaphthalene. These compounds can be purchased individually or obtained as a mixture (i.e. Supelco, Catalog No. 4–7300). Prepare a high concentration of the SPTM standard at 62.5 mg/mL in methylene chloride. Prepare a medium concentration SPTM standard at 1.25 mg/mL by transferring 1.0 mL of the 62.5 mg/mL solution into a 50 mL volumetric flask and diluting to the mark with methylene chloride. Finally, prepare a low concentration SPTM standard at 0.125 mg/mL by transferring 1.0 mL of the 1.25 mg/mL solution into a 10-mL volumetric flask and diluting to the mark with methylene chloride.

7.2.5 Crude oil/drilling fluid calibration standards—Prepare a 4-point crude oil/drilling fluid calibration at concentrations of 0% (no spike—clean drilling fluid), 0.5%, 1.0%, and 2.0% by weight according to the procedures outlined in this appendix using the Reference Crude Oil:

7.2.5.1 Label 4 jars with the following identification: Jar 1—0%Ref-IOLab, Jar 2—0.5%Ref-IOLab, Jar 3—1%Ref-IOLab, and Jar 4—2%Ref-IOLab.

7.2.5.2 Weigh 4, 50-g aliquots of well mixed IO Lab drilling fluid into each of the 4 jars.

7.2.5.3 Add Reference Oil at 0.5%, 1.0%, and 2.0% by weight to jars 2, 3, and 4 respectively. Jar 1 shall not be spiked with Reference Oil in order to retain a ''0%'' oil concentration.

7.2.5.4 Thoroughly mix the contents of each of the 4 jars, using clean glass stirring rods.

7.2.5.5 Transfer (weigh) a 30-g aliquot from Jar 1 to a labeled centrifuge tube. Centrifuge the aliquot for a minimum of 15 min at approximately 15,000 rpm, in order to obtain a solids free supernate. Weigh 0.5 g of the supernate directly into a tared and appropriately labeled GC straight vial. Spike the 0.5-g supernate with 500 μL of the 0.01g/mL 1,3,5-trichlorobenzene internal standard solution (*see* Section 7.2.3 of this appendix), cap with a Teflon lined crimp cap, and vortex for ca. 10 sec.

7.2.5.6 Repeat step 7.2.5.5 except use an aliquot from Jar 2.

7.2.5.7 Repeat step 7.2.5.5 except use an aliquot from Jar 3.

7.2.5.8 Repeat step 7.2.5.5 except use an aliquot from Jar 4.

7.2.5.9 These 4 crude/oil drilling fluid calibration standards are now used for qualitative and quantitative GC/MS analysis.

7.2.6 Precision and recovery standard (mid level crude oil/drilling fluid calibration standard)—Prepare a mid point crude oil/

drilling fluid calibration using IO Lab drilling fluid and Reference Oil at a concentration of 1.0% by weight. Prepare this standard according to the procedures outlined in Section 7.2.5.1 through 7.2.5.5 of this appendix, with the exception that only ''Jar 3'' needs to be prepared. Remove and spike with internal standard, as many 0.5-g aliquots as needed to complete the GC/MS analysis (*see* Section 11.6 of this appendix—bracketing authentic samples every 12 hours with precision and recovery standard) and the initial demonstration exercise described in Section 9.2 of this appendix.

7.2.7 Stability of standards

7.2.7.1 When not used, standards shall be stored in the dark, at −5 to −20 °C in screw-capped vials with PTFE-lined lids. Place a mark on the vial at the level of the solution so that solvent loss by evaporation can be detected. Bring the vial to room temperature prior to use.

7.2.7.2 Solutions used for quantitative purposes shall be analyzed within 48 hours of preparation and on a monthly basis thereafter for signs of degradation. A standard shall remain acceptable if the peak area remains within ±15% of the area obtained in the initial analysis of the standard.

8.0 Sample Collection Preservation and Storage

8.1 Collect NAF and base fluid samples in 100- to 200-mL glass bottles with PTFE- or aluminum foil lined caps.

8.2 Samples collected in the field shall be stored refrigerated until time of preparation.

8.3 Sample and extract holding times for this method have not yet been established. However, based on initial experience with the method, samples should be analyzed within seven to ten days of collection and extracts should be analyzed within seven days of preparation.

8.4 After completion of GC/MS analysis, extracts shall be refrigerated at 4 °C until further notification of sample disposal.

9.0 Quality Control

9.1 Each laboratory that uses this method is required to operate a formal quality assurance program (Reference 16.4). The minimum requirements of this program shall consist of an initial demonstration of laboratory capability, and ongoing analysis of standards, and blanks as a test of continued performance, analyses of spiked samples to assess accuracy and analysis of duplicates to assess precision. Laboratory performance shall be compared to established performance criteria to determine if the results of analyses meet the performance characteristics of the method.

9.1.1 The analyst shall make an initial demonstration of the ability to generate acceptable accuracy and precision with this method. This ability shall be established as described in Section 9.2 of this appendix.

9.1.2 The analyst is permitted to modify this method to improve separations or lower the cost of measurements, provided all performance requirements are met. Each time a modification is made to the method, the analyst is required to repeat the calibration (Section 10.4 of this appendix) and to repeat the initial demonstration procedure described in Section 9.2 of this appendix.

9.1.3 Analyses of blanks are required to demonstrate freedom from contamination. The procedures and criteria for analysis of a blank are described in Section 9.3 of this appendix.

9.1.4 Analysis of a matrix spike sample is required to demonstrate method accuracy. The procedure and QC criteria for spiking are described in Section 9.4 of this appendix.

9.1.5 Analysis of a duplicate field sample is required to demonstrate method precision. The procedure and QC criteria for duplicates are described in Section 9.5 of this appendix.

9.1.6 Analysis of a sample of the clean NAF(s) (as sent from the supplier—i.e., has not been circulated downhole) used in the drilling operations is required.

9.1.7 The laboratory shall, on an ongoing basis, demonstrate through calibration verification and the analysis of the precision and recovery standard (Section 7.2.6 of this appendix) that the analysis system is in control. These procedures are described in Section 11.6 of this appendix.

9.1.8 The laboratory shall maintain records to define the quality of data that is generated.

9.2 Initial precision and accuracy—The initial precision and recovery test shall be performed using the precision and recovery standard (1% by weight Reference Oil in IO Lab drilling fluid). The laboratory shall generate acceptable precision and recovery by performing the following operations.

9.2.1 Prepare four separate aliquots of the precision and recovery standard using the procedure outlined in Section 7.2.6 of this appendix. Analyze these aliquots using the procedures outlined in Section 11 of this appendix.

9.2.2 Using the results of the set of four analyses, compute the average recovery (X) in weight percent and the standard deviation of the recovery(s) for each sample.

9.2.3 If s and X meet the acceptance criteria of 80% to 110%, system performance is acceptable and analysis of samples may begin. If, however, s exceeds the precision limit or X falls outside the range for accuracy, system performance is unacceptable. In this event, review this method, correct the problem, and repeat the test.

9.2.4 Accuracy and precision—The average percent recovery (P) and the standard deviation of the percent recovery (Sp) Express

the accuracy assessment as a percent recovery interval from $P–2S_p$ to $P+2S_p$. For example, if P=90% and S_p=10% for four analyses of crude oil in NAF, the accuracy interval is expressed as 70% to 110%. Update the accuracy assessment on a regular basis.

9.3 Blanks—Rinse glassware and centrifuge tubes used in the method with 30 mL of methylene chloride, remove a 0.5-g aliquot of the solvent, spike it with the 500 µL of the internal standard solution (Section 7.2.3 of this appendix) and analyze a 1-µL aliquot of the blank sample using the procedure in Section 11 of this appendix. Compute results per Section 12 of this appendix.

9.4 Matrix spike sample—Prepare a matrix spike sample according to procedure outlined in Section 7.2.6 of this appendix. Analyze the sample and calculate the concentration (% oil) in the drilling fluid and % recovery of oil from the spiked drilling fluid using the methods described in Sections 11 and 12 of this appendix.

9.5 Duplicates—A duplicate field sample shall be prepared according to procedures outlined in Section 7.3 of this appendix and analyzed according to Section 11 of this appendix. The relative percent difference (RPD) of the calculated concentrations shall be less than 15%.

9.5.1 Analyze each of the duplicates per the procedure in Section 11 of this appendix and compute the results per Section 12 of this appendix.

9.5.2 Calculate the relative percent difference (RPD) between the two results per the following equation:

$$RPD = [D_1 - D_2]/[(D_1 + D_2)/2] \times 100 \quad [1]$$

where:

D_1 = Concentration of crude oil in the sample; and

D_2 = Concentration of crude oil in the duplicate sample.

9.5.3 If the RPD criteria are not met, the analytical system shall be judged to be out of control, and the problem must be immediately identified and corrected, and the sample batch re-analyzed.

9.6 Prepare the clean NAF sample according to procedures outlined in Section 7.3 of this appendix. Ultimately the oil-equivalent concentration from the TIC or EIP signal measured in the clean NAF sample shall be subtracted from the corresponding authentic field samples in order to calculate the true contaminant concentration (% oil) in the field samples (*see* Section 12 of this appendix).

9.7 The specifications contained in this method can be met if the apparatus used is calibrated properly, and maintained in a calibrated state. The standards used for initial precision and recovery (Section 9.2 of this appendix) and ongoing precision and recovery (Section 11.6 of this appendix) shall be identical, so that the most precise results will be obtained. The GC/MS instrument will provide the most reproducible results if dedicated to the setting and conditions required for the analyses given in this method.

9.8 Depending on specific program requirements, field replicates and field spikes of crude oil into samples may be required when this method is used to assess the precision and accuracy of the sampling and sample transporting techniques.

10.0 CALIBRATION

10.1 Establish gas chromatographic/mass spectrometer operating conditions given in Table 1 of this appendix. Perform the GC/MS system hardware-tune as outlined by the manufacture. The gas chromatograph shall be calibrated using the internal standard technique.

NOTE: Because each GC is slightly different, it may be necessary to adjust the operating conditions (carrier gas flow rate and column temperature and temperature program) slightly until the retention times in Table 2 of this appendix are met.

TABLE 1.—GAS CHROMATOGRAPH/MASS SPECTROMETER (GC/MS) OPERATION CONDITIONS

Parameter	Setting
Injection pot	280 °C
Transfer line	280 °C
Detector	280 °C
Initial Temperature	50 °C
Initial Time	5 minutes
Ramp	50 to 300 °C @ 5 °C per minute
Final Temperature	300 °C
Final Hold	20 minutes or until all peaks have eluted
Carrier Gas	Helium
Flow rate	As required for standard operation
Split ratio	As required to meet performance criteria (~1:100)
Mass range	35 to 600 amu

TABLE 2.—APPROXIMATE RETENTION TIME FOR COMPOUNDS

Compound	Approximate retention time (minutes)
Toluene	5.6
Octane, n – C_8	7.2
Ethylbenzene	10.3
1,2,4-Trimethylbenzene	16.0
Decane, – C_{10}	16.1
TCB (Internal Standard)	21.3
Dodecane, – C_{12}	22.9
1-Methylnaphthalene	26.7
1-Tetradecene	28.4
Tetradecane, – C_{14}	28.7
1,3-Dimethylnaphthalene	29.7

10.2 Internal standard calibration procedure—1,3,5-trichlorobenzene (TCB) has been shown to be free of interferences from diesel

and crude oils and is a suitable internal standard.

10.3 The system performance test mix standards prepared in Section 7.2.4 of this appendix shall be used to establish retention times and establish qualitative detection limits.

10.3.1 Spike a 500-mL aliquot of the 1.25 mg/mL SPTM standard with 500 µL of the TCB internal standard solution.

10.3.2 Inject 1.0 µL of this spiked SPTM standard onto the GC/MS in order to demonstrate proper retention times. For the GC/MS used in the development of this method, the ten compounds in the mixture had typical retention times shown in Table 2 of this appendix. Extracted ion scans for m/z 91 and 105 showed a maximum abundance of 400,000.

10.3.3 Spike a 500-mL aliquot of the 0.125 mg/mL SPTM standard with 500 µL of the TCB internal standard solution.

10.3.4 Inject 1.0 µL of this spiked SPTM standard onto the GC/MS to monitor detectable levels. For the GC/MS used in the development of this test, all ten compounds showed a minimum peak height of three times signal to noise. Extracted ion scans for m/z 91 and 105 showed a maximum abundance of 40,000.

10.4 GC/MS crude oil/drilling fluid calibration—There are two methods of quantification: Total Area Integration (C_8–C_{13}) and EIP Area Integration using m/z's 91 and 105. The Total Area Integration method should be used as the primary technique for quantifying crude oil in NAFs. The EIP Area Integration method should be used as a confirmatory technique for NAFs. However, the EIP Area Integration method shall be used as the primary method for quantifying oil in enhanced mineral oil (EMO) based drilling fluid. Inject 1.0 µL of each of the four crude oil/drilling fluid calibration standards prepared in Section 7.2.5 of this appendix into the GC/MS. The internal standard should elute approximately 21–22 minutes after injection. For the GC/MS used in the development of this method, the internal standard peak was (35 to 40)% of full scale at an abundance of about 3.5e+07.

10.4.1 Total Area Integration Method—For each of the four calibration standards obtain the following: Using a straight baseline integration technique, obtain the total ion chromatogram (TIC) area from C_8 to C_{13}. Obtain the TIC area of the internal standard (TCB). Subtract the TCB area from the C_8–C_{13} area to obtain the true C_8–C_{13} area. Using the C_8–C_{13} and TCB areas, and known internal standard concentration, generate a linear regression calibration using the internal standard method. The r^2 value for the linear regression curve shall be greater than or equal to 0.998. Some synthetic fluids might have peaks that elute in the window and would interfere with the analysis. In this case the integration window can be shifted to other areas of scan where there are no interfering peaks from the synthetic base fluid.

10.4.2 EIP Area Integration—For each of the four calibration standards generate Extracted Ion Profiles (EIPs) for m/z 91 and 105. Using straight baseline integration techniques, obtain the following EIP areas:

10.4.2.1 For m/z 91 integrate the area under the curve from approximately 9 minutes to 21–22 minutes, just prior to but not including the internal standard.

10.4.2.2 For m/z 105 integrate the area under the curve from approximately 10.5 minutes to 26.5 minutes.

10.4.2.3 Obtain the internal standard area from the TCB in each of the four calibration standards, using m/z 180.

10.4.2.4 Using the EIP areas for TCB, m/z 91 and m/z105, and the known concentration of internal standard, generate linear regression calibration curves for the target ions 91 and 105 using the internal standard method. The r^2 value for each of the EIP linear regression curves shall be greater than or equal to 0.998.

10.4.2.5 Some base fluids might produce a background level that would show up on the extracted ion profiles, but there should not be any real peaks (signal to noise ratio of 1:3) from the clean base fluids.

11.0 Procedure

11.1 Sample Preparation—

11.1.1 Mix the authentic field sample (drilling fluid) well. Transfer (weigh) a 30-g aliquot of the sample to a labeled centrifuge tube.

11.1.2 Centrifuge the aliquot for a minimum of 15 min at approximately 15,000 rpm, in order to obtain a solids free supernate.

11.1.3 Weigh 0.5 g of the supernate directly into a tared and appropriately labeled GC straight vial.

11.1.4 Spike the 0.5-g supernate with 500 µL of the 0.01g/mL 1,3,5-trichlorobenzene internal standard solution (*see* Section 7.2.3 of this appendix), cap with a Teflon lined crimp cap, and vortex for ca. 10 sec.

11.1.5 The sample is ready for GC/MS analysis.

11.2 Gas Chromatography.

Table 1 of this appendix summarizes the recommended operating conditions for the GC/MS. Retention times for the n-alkanes obtained under these conditions are given in Table 2 of this appendix. Other columns, chromatographic conditions, or detectors may be used if initial precision and accuracy requirements (Section 9.2 of this appendix) are met. The system shall be calibrated according to the procedures outlined in Section 10 of this appendix, and verified every 12 hours according to Section 11.6 of this appendix.

11.2.1 Samples shall be prepared (extracted) in a batch of no more than 20 samples. The batch shall consist of 20 authentic samples, 1 blank (Section 9.3 of this appendix), 1 matrix spike sample (9.4), and 1 duplicate field sample (9.5), and a prepared sample of the corresponding clean NAF used in the drilling process.

11.2.2 An analytical sequence shall be analyzed on the GC/MS where the 3 SPTM standards (Section 7.2.4 of this appendix) containing internal standard are analyzed first, followed by analysis of the four GC/MS crude oil/drilling fluid calibration standards (Section 7.2.5 of this appendix), analysis of the blank, matrix spike sample, the duplicate sample, the clean NAF sample, followed by the authentic samples.

11.2.3 Samples requiring dilution due to excessive signal shall be diluted using methylene chloride.

11.2.4 Inject 1.0 μL of the test sample or standard into the GC, using the conditions in Table 1 of this appendix.

11.2.5 Begin data collection and the temperature program at the time of injection.

11.2.6 Obtain a TIC and EIP fingerprint scans of the sample (Table 3 of this appendix).

11.2.7 If the area of the C_8 to C_{13} peaks exceeds the calibration range of the system, dilute a fresh aliquot of the test sample weighing 0.50-g and re-analyze.

11.2.8 Determine the C_8 to C_{13} TIC area, the TCB internal standard area, and the areas for the m/z 91 and 105 EIPs. These shall be used in the calculation of oil concentration in the samples (see Section 12 of this appendix).

TABLE 3.—RECOMMENDED ION MASS NUMBERS

Selected ion mass numbers	Corresponding aromatic compounds	Typical rentention time (minutes)
91	Methylbenzene	6.0
	Ethylbenzene	10.3
	1,4-Dimethylbenzene.	10.9
	1,3-Dimethylbenzene.	10.9
	1,2-Dimethylbenzene.	11.9
105	1,3,5-Trimethylbenzene.	15.1
	1,2,4-Trimethylbenzene.	16.0
	1,2,3-Trimethylbenzene.	17.4
156	2,6-Dimethylnaphthalene.	28.9
	1,2-Dimethylnaphthalene.	29.4
	1,3-Dimethylnaphthalene.	29.7

11.2.9 Observe the presence of peaks in the EIPs that would confirm the presence of any target aromatic compounds. Using the EIP areas and EIP linear regression calibrations compare the abundance of the aromatic peaks, and if appropriate, determine approximate crude oil contamination in the sample for each of the target ions.

11.3 Qualitative Identification—See Section 17 of this appendix for schematic flowchart.

11.3.1 Qualitative identification shall be accomplished by comparison of the TIC and EIP area data from an authentic sample to the TIC and EIP area data from the calibration standards (Section 12.4 of this appendix). Crude oil shall be identified by the presence of C_{10} to C_{13} n-alkanes and corresponding target aromatics.

11.3.2 Using the calibration data, establish the identity of the C_8 to C_{13} peaks in the chromatogram of the sample. Using the calibration data, establish the identity of any target aromatics present on the extracted ion scans.

11.3.3 Crude oil is not present in a detectable amount in the sample if there are no target aromatics seen on the extracted ion scans. The experience of the analyst shall weigh heavily in the determination of the presence of peaks at a signal-to-noise ratio of 3 or greater.

11.3.4 If the chromatogram shows n-alkanes from C_8 to C_{13} and target aromatics to be present, contamination by crude oil or diesel shall be suspected and quantitative analysis shall be determined. If there are no n-alkanes present that are not seen on the blank, and no target aromatics are seen, the sample can be considered to be free of contamination.

11.4 Quantitative Identification—

11.4.1 Determine the area of the peaks from C_8 to C_{13} as outlined in the calibration section (10.4.1 of this appendix). If the area of the peaks for the sample is greater than that for the clean NAF (base fluid) use the crude oil/drilling fluid calibration TIC linear regression curve to determine approximate crude oil contamination.

11.4.2 Using the EIPs outlined in Section 10.4.2 of this appendix, determine the presence of any target aromatics. Using the integration techniques outlined in Section 10.4.2 of this appendix, obtain the EIP areas for m/z 91 and 105. Use the crude oil/drilling fluid calibration EIP linear regression curves to

determine approximate crude oil contamination.

11.5 Complex Samples—

11.5.1 The most common interferences in the determination of crude oil can be from mineral oil, diesel oil, and proprietary additives in drilling fluids.

11.5.2 Mineral oil can typically be identified by its lower target aromatic content, and narrow range of strong peaks.

11.5.3 Diesel oil can typically be identified by low amounts of n-alkanes from C_7 to C_9, and the absence of n-alkanes greater than C_{25}.

11.5.4 Crude oils can usually be distinguished by the presence of high aromatics, increased intensities of C_8 to C_{13} peaks, and/or the presence of higher hydrocarbons of C_{25} and greater (which may be difficult to see in some synthetic fluids at low contamination levels).

11.5.4.1 Oil condensates from gas wells are low in molecular weight and will normally produce strong chromatographic peaks in the C_8–C_{13} range. If a sample of the gas condensate crude oil from the formation is available, the oil can be distinguished from other potential sources of contamination by using it to prepare a calibration standard.

11.5.4.2 Asphaltene crude oils with API gravity 20 may not produce chromatographic peaks strong enough to show contamination at levels of the calibration. Extracted ion peaks should be easier to see than increased intensities for the C_8 to C_{13} peaks. If a sample of asphaltene crude from the formation is available, a calibration standard shall be prepared.

11.6 System and Laboratory Performance—

11.6.1 At the beginning of each 8-hour shift during which analyses are performed, GC crude oil/drilling fluid calibration and system performance test mixes shall be verified. For these tests, analysis of the medium-level calibration standard (1-% Reference Oil in IO Lab drilling fluid, and 1.25 mg/mL SPTM with internal standard) shall be used to verify all performance criteria. Adjustments and/or re-calibration (per Section 10 of this appendix) shall be performed until all performance criteria are met. Only after all performance criteria are met may samples and blanks be analyzed.

11.6.2 Inject 1.0 μL of the medium-level GC/MS crude oil/drilling fluid calibration standard into the GC instrument according to the procedures in Section 11.2 of this appendix. Verify that the linear regression curves for both TIC area and EIP areas are still valid using this continuing calibration standard.

11.6.3 After this analysis is complete, inject 1.0 μL of the 1.25 mg/mL SPTM (containing internal standard) into the GC instrument and verify the proper retention times are met (*see* Table 2 of this appendix).

11.6.4 Retention times—Retention time of the internal standard. The absolute retention time of the TCB internal standard shall be within the range 21.0 ± 0.5 minutes. Relative retention times of the n-alkanes: The retention times of the n-alkanes relative to the TCB internal standard shall be similar to those given in Table 2 of this appendix.

12.0 CALCULATIONS

The concentration of oil in NAFs drilling fluids shall be computed relative to peak areas between C_8 and C_{13} (using the Total Area Integration method) or total peak areas from extracted ion profiles (using the Extracted Ion Profile Method). In either case, there is a measurable amount of peak area, even in clean drilling fluid samples, due to spurious peaks and electrometer ''noise'' that contributes to the total signal measured using either of the quantification methods. In this procedure, a correction for this signal is applied, using the blank or clean sample correction technique described in American Society for Testing Materials (ASTM) Method D–3328–90, Comparison of Waterborne Oil by Gas Chromatography. In this method, the ''oil equivalents'' measured in a blank sample by total area gas chromatography are subtracted from that determined for a field sample to arrive at the most accurate measure of oil residue in the authentic sample.

12.1 Total Area Integration Method

12.1.1 Using C_8 to C_{13} TIC area, the TCB area in the clean NAF sample and the TIC linear regression curve, compute the oil equivalent concentration of the C_8 to C_{13} retention time range in the clean NAF.

NOTE: The actual TIC area of the C_8 to C_{13} is equal to the C_8 to C_{13} area minus the area of the TCB.

12.1.2 Using the corresponding information for the authentic sample, compute the oil equivalent concentration of the C_8 to C_{13} retention time range in the authentic sample.

12.1.3 Calculate the concentration (% oil) of oil in the sample by subtracting the oil equivalent concentration (% oil) found in the clean NAF from the oil equivalent concentration (% oil) found in the authentic sample.

12.2 EIP Area Integration Method

12.2.1 Using either m/z 91 or 105 EIP areas, the TCB area in the clean NAF sample, and the appropriate EIP linear regression curve, compute the oil equivalent concentration of the in the clean NAF.

12.2.2 Using the corresponding information for the authentic sample, compute its oil equivalent concentration.

12.2.3 Calculate the concentration (% oil) of oil in the sample by subtracting the oil equivalent concentration (% oil) found in the

clean NAF from the oil equivalent concentration (% oil) found in the authentic sample.

13.0 METHOD PERFORMANCE

13.1 Specification in this method are adopted from EPA Method 1663, Differentiation of Diesel and Crude Oil by GC/FID (Reference 16.5).

13.2 Single laboratory method performance using an Internal Olefin (IO) drilling fluid fortified at 0.5% oil using a 35 API gravity oil was:

Precision and accuracy 94±4%
Accuracy interval—86.3% to 102%
Relative percent difference in duplicate analysis—6.2%

14.0 POLLUTION PREVENTION

14.1 The solvent used in this method poses little threat to the environment when recycled and managed properly.

15.0 WASTE MANAGEMENT

15.1 It is the laboratory's responsibility to comply with all federal, state, and local regulations governing waste management, particularly the hazardous waste identification rules and land disposal restriction, and to protect the air, water, and land by minimizing and controlling all releases from fume hoods and bench operations. Compliance with all sewage discharge permits and regulations is also required.

15.2 All authentic samples (drilling fluids) failing the RPE (fluorescence) test (indicated by the presence of fluorescence) shall be retained and classified as contaminated samples. Treatment and ultimate fate of these samples is not outlined in this SOP.

15.3 For further information on waste management, consult ''The Waste Management Manual for Laboratory Personnel'', and ''Less is Better: Laboratory Chemical Management for Waste Reduction'', both available from the American Chemical Society's Department of Government Relations and Science Policy, 1155 16th Street NW, Washington, DC 20036.

16.0 REFERENCES

16.1 Carcinogens—''Working With Carcinogens.'' Department of Health, Education, and Welfare, Public Health Service, Centers for Disease Control (available through National Technical Information Systems, 5285 Port Royal Road, Springfield, VA 22161, document no. PB–277256): August 1977.

16.2 ''OSHA Safety and Health Standards, General Industry [29 CFR 1910], Revised.'' Occupational Safety and Health Administration, OSHA 2206. Washington, DC: January 1976.

16.3 ''Handbook of Analytical Quality Control in Water and Wastewater Laboratories.'' USEPA, EMSSL–CI, EPA–600/4–79–019. Cincinnati, OH: March 1979.

16.4 ''Method 1663, Differentiation of Diesel and Crude Oil by GC/FID, Methods for the Determination of Diesel, Mineral, and Crude Oils in Offshore Oil and Gas Industry Discharges, EPA 821–R–92–008, Office of Water Engineering and Analysis Division, Washington, DC: December 1992.

[66 FR 6901, Jan. 22, 2001]

APPENDIX 6 TO SUBPART A OF PART 435—REVERSE PHASE EXTRACTION (RPE) METHOD FOR DETECTION OF OIL CONTAMINATION IN NON-AQUEOUS DRILLING FLUIDS (NAF)

1.0 SCOPE AND APPLICATION

1.1 This method is used for determination of crude or formation oil, or other petroleum oil contamination, in non-aqueous drilling fluids (NAFs).

1.2 This method is intended as a positive/negative test to determine a presence of crude oil in NAF prior to discharging drill cuttings from offshore production platforms.

1.3 This method is for use in the Environmental Protection Agency's (EPA's) survey and monitoring programs under the Clean Water Act, including monitoring of compliance with the Gulf of Mexico NPDES General Permit for monitoring of oil contamination in drilling fluids.

1.4 This method has been designed to show positive contamination for 5% of representative crude oils at a concentration of 0.1% in drilling fluid (vol/vol), 50% of representative crude oils at a concentration of 0.5%, and 95% of representative crude oils at a concentration of 1%.

1.5 Any modification of this method, beyond those expressly permitted, shall be considered a major modification subject to application and approval of alternate test procedures under 40 CFR Parts 136.4 and 136.5.

1.6 Each laboratory that uses this method must demonstrate the ability to generate acceptable results using the procedure in Section 9.2 of this appendix.

2.0 SUMMARY OF METHOD

2.1 An aliquot of drilling fluid is extracted using isopropyl alcohol.

2.2 The mixture is allowed to settle and then filtered to separate out residual solids.

2.3 An aliquot of the filtered extract is charged onto a reverse phase extraction (RPE) cartridge.

2.4 The cartridge is eluted with isopropyl alcohol.

2.5 Crude oil contaminates are retained on the cartridge and their presence (or absence) is detected based on observed fluorescence using a black light.

3.0 DEFINITIONS

3.1 A NAF is one in which the continuous phase is a water immiscible fluid such as an oleaginous material (e.g., mineral oil, enhance mineral oil, paraffinic oil, or synthetic material such as olefins and vegetable esters).

4.0 INTERFERENCES

4.1 Solvents, reagents, glassware, and other sample-processing hardware may yield artifacts that affect results. Specific selection of reagents and purification of solvents may be required.

4.2 All materials used in the analysis shall be demonstrated to be free from interferences under the conditions of analysis by running laboratory reagent blanks as described in Section 9.5 of this appendix.

5.0 SAFETY

5.1 The toxicity or carcinogenicity of each reagent used in this method has not been precisely determined; however, each chemical shall be treated as a potential health hazard. Exposure to these chemicals should be reduced to the lowest possible level. Material Safety Data Sheets (MSDSs) shall be available for all reagents.

5.2 Isopropyl alcohol is flammable and should be used in a well-ventilated area.

5.3 Unknown samples may contain high concentration of volatile toxic compounds. Sample containers should be opened in a hood and handled with gloves to prevent exposure. In addition, all sample preparation should be conducted in a well-ventilated area to limit the potential exposure to harmful contaminants. Drilling fluid samples should be handled with the same precautions used in the drilling fluid handling areas of the drilling rig.

5.4 This method does not address all safety issues associated with its use. The laboratory is responsible for maintaining a safe work environment and a current awareness file of OSHA regulations regarding the safe handling of the chemicals specified in this method. A reference file of material safety data sheets (MSDSs) shall be available to all personnel involved in these analyses. Additional information on laboratory safety can be found in References 16.1–16.2.

6.0 EQUIPMENT AND SUPPLIES

NOTE: Brand names, suppliers, and part numbers are for illustrative purposes only. No endorsement is implied. Equivalent performance may be achieved using apparatus and materials other than those specified here, but demonstration of equivalent performance that meets the requirements of this method is the responsibility of the laboratory.

6.1 Sampling equipment.

6.1.1 Sample collection bottles/jars—New, pre-cleaned bottles/jars, lot-certified to be free of artifacts. Glass preferable, plastic acceptable, wide mouth approximately 1–L, with Teflon-lined screw cap.

6.2 Equipment for glassware cleaning.

6.2.1 Laboratory sink.

6.2.2 Oven—Capable of maintaining a temperature within ±5 °C in the range of 100–250 °C.

6.3 Equipment for sample extraction.

6.3.1 Vials—Glass, 25 mL and 4 mL, with Teflon-lined screw caps, baked at 200–250 °C for 1–h minimum prior to use.

6.3.2 Gas-tight syringes—Glass, various sizes, 0.5 mL to 2.5 mL (if spiking of drilling fluids with oils is to occur).

6.3.3 Auto pipetters—various sizes, 0.1 mL, 0.5 mL, 1 to 5 mL delivery, and 10 mL delivery, with appropriate size disposable pipette tips, calibrated to within ±0.5%.

6.3.4 Glass stirring rod.

6.3.5 Vortex mixer.

6.3.6 Disposable syringes—Plastic, 5 mL.

6.3.7 Teflon syringe filter, 25-mm, 0.45µm pore size—Acrodisc® CR Teflon (or equivalent).

6.3.8 Reverse Phase Extraction C_{18} Cartridge—Waters Sep-Pak®Plus, C_{18} Cartridge, 360 mg of sorbent (or equivalent).

6.3.9 SPE vacuum manifold—Supelco Brand, 12 unit (or equivalent). Used as support for cartridge/syringe assembly only. Vacuum apparatus not required.

6.4 Equipment for fluorescence detection.

6.4.1 Black light—UV Lamp, Model UVG 11, Mineral Light Lamp, Shortwave 254 nm, or Longwave 365 nm, 15 volts, 60 Hz, 0.16 amps (or equivalent).

6.4.2 Black box—cartridge viewing area. A commercially available ultraviolet viewing cabinet with viewing lamp, or alternatively, a cardboard box or equivalent, approximately 14″×7.5″×7.5″ in size and painted flat black inside. Lamp positioned in fitted and sealed slot in center on top of box. Sample cartridges sit in a tray, ca. 6″ from lamp. Cardboard flaps cut on top panel and side of front panel for sample viewing and sample cartridge introduction, respectively.

6.4.3 Viewing platform for cartridges. Simple support (hand made vial tray—black in color) for cartridges so that they do not move during the fluorescence testing.

7.0 REAGENTS AND STANDARDS

7.1 Isopropyl alcohol—99% purity.

7.2 NAF—Appropriate NAF as sent from the supplier (has not been circulated downhole). Use the clean NAF corresponding to the NAF being used in the current drilling operation.

7.3 Standard crude oil—NIST SRM 1582 petroleum crude oil.

8.0 Sample Collection, Preservation, and Storage

8.1 Collect approximately one liter of representative sample (NAF, which has been circulated downhole) in a glass bottle or jar. Cover with a Teflon lined cap. To allow for a potential need to re-analyze and/or re-process the sample, it is recommended that a second sample aliquot be collected.

8.2 Label the sample appropriately.

8.3 All samples must be refrigerated at 0–4 °C from the time of collection until extraction (40 CFR Part 136, Table II).

8.4 All samples must be analyzed within 28 days of the date and time of collection (40 CFR Part 136, Table II).

9.0 Quality Control

9.1 Each laboratory that uses this method is required to operate a formal quality assurance program (Reference 16.3). The minimum requirements of this program consist of an initial demonstration of laboratory capability, and ongoing analyses of blanks and spiked duplicates to assess accuracy and precision and to demonstrate continued performance. Each field sample is analyzed in duplicate to demonstrate representativeness.

9.1.1 The analyst shall make an initial demonstration of the ability to generate acceptable accuracy and precision with this method. This ability is established as described in Section 9.2 of this appendix.

9.1.2 Preparation and analysis of a set of spiked duplicate samples to document accuracy and precision. The procedure for the preparation and analysis of these samples is described in Section 9.4 of this appendix.

9.1.3 Analyses of laboratory reagent blanks are required to demonstrate freedom from contamination. The procedure and criteria for preparation and analysis of a reagent blank are described in Section 9.5 of this appendix.

9.1.4 The laboratory shall maintain records to define the quality of the data that is generated.

9.1.5 Accompanying QC for the determination of oil in NAF is required per analytical batch. An analytical batch is a set of samples extracted at the same time, to a maximum of 10 samples. Each analytical batch of 10 or fewer samples must be accompanied by a laboratory reagent blank (Section 9.5 of this appendix), corresponding NAF reference blanks (Section 9.6 of this appendix), a set of spiked duplicate samples blank (Section 9.4 of this appendix), and duplicate analysis of each field sample. If greater than 10 samples are to be extracted at one time, the samples must be separated into analytical batches of 10 or fewer samples.

9.2 Initial demonstration of laboratory capability. To demonstrate the capability to perform the test, the analyst shall analyze two representative unused drilling fluids (e.g., internal olefin-based drilling fluid, vegetable ester-based drilling fluid), each prepared separately containing 0.1%, 1%, and 2% or a representative oil. Each drilling fluid/concentration combination shall be analyzed 10 times, and successful demonstration will yield the following average results for the data set:

0.1% oil—Detected in <20% of samples
1% oil—Detected in >75% of samples
2% oil—Detected in >90% of samples

9.3 Sample duplicates.

9.3.1 The laboratory shall prepare and analyze (Section 11.2 and 11.4 of this appendix) each authentic sample in duplicate, from a given sampling site or, if for compliance monitoring, from a given discharge.

9.3.2 The duplicate samples must be compared versus the prepared corresponding NAF blank.

9.3.3 Prepare and analyze the duplicate samples according to procedures outlined in Section 11 of this appendix.

9.3.4 The results of the duplicate analyses are acceptable if each of the results give the same response (fluorescence or no fluorescence). If the results are different, sample non-homogenicity issues may be a concern. Prepare the samples again, ensuring a well-mixed sample prior to extraction. Analyze the samples once again.

9.3.5 If different results are obtained for the duplicate a second time, the analytical system is judged to be out of control and the problem shall be identified and corrected, and the samples re-analyzed.

9.4 Spiked duplicates—Laboratory prepared spiked duplicates are analyzed to demonstrate acceptable accuracy and precision.

9.4.1 Preparation and analysis of a set of spiked duplicate samples with each set of no more than 10 field samples is required to demonstrate method accuracy and precision and to monitor matrix interferences (interferences caused by the sample matrix). A field NAF sample expected to contain less than 0.5% crude oil (and documented to not fluoresce as part of the sample batch analysis) shall be spiked with 1% (by volume) of suitable reference crude oil and analyzed as field samples, as described in Section 11 of this appendix. If no low-level drilling fluid is available, then the unused NAF can be used as the drilling fluid sample.

9.5 Laboratory reagent blanks—Laboratory reagent blanks are analyzed to demonstrate freedom from contamination.

9.5.1 A reagent blank is prepared by passing 4 mL of the isopropyl alcohol through a Teflon syringe filter and collecting the filtrate in a 4-mL glass vial. A Sep Pak® C_{18} cartridge is then preconditioned with 3 mL of isopropyl alcohol. A 0.5-mL aliquot of the filtered isopropyl alcohol is added to the syringe barrel along with 3.0 mL of isopropyl alcohol. The solvent is passed through the

preconditioned Sep Pak® cartridge. An additional 2-mL of isopropyl alcohol is eluted through the cartridge. The cartridge is now considered the ''reagent blank'' cartridge and is ready for viewing (analysis). Check the reagent blank cartridge under the black light for fluorescence. If the isopropyl alcohol and filter are clean, no fluorescence will be observed.

9.5.2 If fluorescence is detected in the reagent blank cartridge, analysis of the samples is halted until the source of contamination is eliminated and a prepared reagent blank shows no fluorescence under a black light. All samples shall be associated with an uncontaminated method blank before the results may be reported for regulatory compliance purposes.

9.6 NAF reference blanks—NAF reference blanks are prepared from the NAFs sent from the supplier (NAF that has not been circulated downhole) and used as the reference when viewing the fluorescence of the test samples.

9.6.1 A NAF reference blank is prepared identically to the authentic samples. Place a 0.1 mL aliquot of the ''clean'' NAF into a 25-mL glass vial. Add 10 mL of isopropyl alcohol to the vial. Cap the vial. Vortex the vial for approximately 10 sec. Allow the solids to settle for approximately 15 minutes. Using a 5-mL syringe, draw up 4 mL of the extract and filter it through a PTFE syringe filter, collecting the filtrate in a 4-mL glass vial. Precondition a Sep Pak® C_{18} cartridge with 3 mL of isopropyl alcohol. Add a 0.5-mL aliquot of the filtered extract to the syringe barrel along with 3.0 mL of isopropyl alcohol. Pass the extract and solvent through the preconditioned Sep Pak® cartridge. Pass an additional 2-mL of isopropyl alcohol through the cartridge. The cartridge is now considered the NAF blank cartridge and is ready for viewing (analysis). This cartridge is used as the reference cartridge for determining the absence or presence of fluorescence in all authentic drilling fluid samples that originate from the same NAF. That is, the specific NAF reference blank cartridge is put under the black light along with a prepared cartridge of an authentic sample originating from the same NAF material. The fluorescence or absence of fluorescence in the authentic sample cartridge is determined relative to the NAF reference cartridge.

9.6.2 Positive control solution, equivalent to 1% crude oil contaminated mud extract, is prepared by dissolving 87 mg of standard crude oil into 10.00 mL of methylene chloride. Then mix 40 μL of this solution into 10.00 mL of IPA. Transfer 0.5 mL of this solution into a preconditioned C18 cartridge, followed by 2 ml of IPA.

10.0 Calibration and Standardization

10.1 Calibration and standardization methods are not employed for this procedure.

11.0 Procedure

This method is a screening-level test. Precise and accurate results can be obtained only by strict adherence to all details.

11.1 Preparation of the analytical batch.

11.1.1 Bring the analytical batch of samples to room temperature.

11.1.2 Using a large glass stirring rod, mix the authentic sample thoroughly.

11.1.3 Using a large glass stirring rod, mix the clean NAF (sent from the supplier) thoroughly.

11.2 Extraction.

11.2.1 Using an automatic positive displacement pipetter and a disposable pipette tip transfer 0.1-mL of the authentic sample into a 25-mL vial.

11.2.2 Using an automatic pipetter and a disposable pipette tip dispense a 10-mL aliquot of solvent grade isopropyl alcohol (IPA) into the 25 mL vial.

11.2.3 Cap the vial and vortex the vial for ca. 10–15 seconds.

11.2.4 Let the sample extract stand for approximately 5 minutes, allowing the solids to separate.

11.2.5 Using a 5-mL disposable plastic syringe remove 4 mL of the extract from the 25-mL vial.

11.2.6 Filter 4 mL of extract through a Teflon syringe filter (25-mm diameter, 0.45 μm pore size), collecting the filtrate in a labeled 4-mL vial.

11.2.7 Dispose of the PFTE syringe filter.

11.2.8 Using a black permanent marker, label a Sep Pak® C_{18} cartridge with the sample identification.

11.2.9 Place the labeled Sep Pak® C_{18} cartridge onto the head of a SPE vacuum manifold.

11.2.10 Using a 5-mL disposable plastic syringe, draw up exactly 3-mL (air free) of isopropyl alcohol.

11.2.11 Attach the syringe tip to the top of the C_{18} cartridge.

11.2.12 Condition the C_{18} cartridge with the 3-mL of isopropyl alcohol by depressing the plunger slowly.

NOTE: Depress the plunger just to the point when no liquid remains in the syringe barrel. Do not force air through the cartridge. Collect the eluate in a waste vial.

11.2.13 Remove the syringe temporarily from the top of the cartridge, then remove the plunger, and finally reattach the syringe barrel to the top of the C_{18} cartridge.

11.2.14 Using automatic pipetters and disposable pipette tips, transfer 0.5 mL of the filtered extract into the syringe barrel, followed by a 3.0-mL transfer of isopropyl alcohol to the syringe barrel.

11.2.15 Insert the plunger and slowly depress it to pass only the extract and solvent through the preconditioned C_{18} cartridge.

NOTE: Depress the plunger just to the point when no liquid remains in the syringe barrel. Do not force air through the cartridge. Collect the eluate in a waste vial.

11.2.16 Remove the syringe temporarily from the top of the cartridge, then remove the plunger, and finally reattach the syringe barrel to the top of the C_{18} cartridge.

11.2.17 Using an automatic pipetter and disposable pipette tip, transfer 2.0 mL of isopropyl alcohol to the syringe barrel.

11.2.18 Insert the plunger and slowly depress it to pass the solvent through the C_{18} cartridge.

NOTE: Depress the plunger just to the point when no liquid remains in the syringe barrel. Do not force air through the cartridge. Collect the eluate in a waste vial.

11.2.19 Remove the syringe and labeled C_{18} cartridge from the top of the SPE vacuum manifold.

11.2.20 Prepare a reagent blank according to the procedures outlined in Section 9.5 of this appendix.

11.2.21 Prepare the necessary NAF reference blanks for each type of NAF encountered in the field samples according to the procedures outlined in Section 9.6 of this appendix.

11.2.22 Prepare the positive control (1% crude oil equivalent) according to Section 9.6.2 of this appendix.

11.3 Reagent blank fluorescence testing.

11.3.1 Place the reagent blank cartridge in a black box, under a black light.

11.3.2 Determine the presence or absence of fluorescence for the reagent blank cartridge. If fluorescence is detected in the blank, analysis of the samples is halted until the source of contamination is eliminated and a prepared reagent blank shows no fluorescence under a black light. All samples must be associated with an uncontaminated method blank before the results may be reported for regulatory compliance purposes.

11.4 Sample fluorescence testing.

11.4.1 Place the respective NAF reference blank (Section 9.6 of this appendix) onto the tray inside the black box.

11.4.2 Place the authentic field sample cartridge (derived from the same NAF as the NAF reference blank) onto the tray, adjacent and to the right of the NAF reference blank.

11.4.3 Turn on the black light.

11.4.4 Compare the fluorescence of the sample cartridge with that of the negative control cartridge (NAF blank, Section 9.6.1 of this appendix) and positive control cartridge (1% crude oil equivalent, Section 9.6.2 of this appendix).

11.4.5 If the fluorescence of the sample cartridge is equal to or brighter than the positive control cartridge (1% crude oil equivalent, Section 9.6.2 of this appendix), the sample is considered contaminated. Otherwise, the sample is clean.

12.0 DATA ANALYSIS AND CALCULATIONS

Specific data analysis techniques and calculations are not performed in this SOP.

13.0 METHOD PERFORMANCE

This method was validated through a single laboratory study, conducted with rigorous statistical experimental design and interpretation (Reference 16.4).

14.0 POLLUTION PREVENTION

14.1 The solvent used in this method poses little threat to the environment when recycled and managed properly.

15.0 WASTE MANAGEMENT

15.1 It is the laboratory's responsibility to comply with all Federal, State, and local regulations governing waste management, particularly the hazardous waste identification rules and land disposal restriction, and to protect the air, water, and land by minimizing and controlling all releases from bench operations. Compliance with all sewage discharge permits and regulations is also required.

15.2 All authentic samples (drilling fluids) failing the fluorescence test (indicated by the presence of fluorescence) shall be retained and classified as contaminated samples. Treatment and ultimate fate of these samples is not outlined in this SOP.

15.3 For further information on waste management, consult ''The Waste Management Manual for Laboratory Personnel,'' and ''Less is Better: Laboratory Chemical Management for Waste Reduction,'' both available from the American Chemical Society's Department of Government Relations and Science Policy, 1155 16th Street, NW, Washington, DC 20036.

16.0 REFERENCES

16.1 ''Carcinogen—Working with Carcinogens,'' Department of Health, Education, and Welfare, Public Health Service, Center for Disease Control, National Institute for Occupational Safety and Health, Publication No. 77–206, August 1977.

16.2 ''OSHA Safety and Health Standards, General Industry,'' (29 CFR 1910), Occupational Safety and Health Administration, OSHA 2206 (Revised, January 1976).

16.3 ''Handbook of Analytical Quality Control in Water and Wastewater Laboratories,'' USEPA, EMSL-Ci, Cincinnati, OH 45268, EPA–600/4–79–019, March 1979.

16.4 Report of the Laboratory Evaluation of Static Sheen Test Replacements—Reverse Phase Extraction (RPE) Method for Detecting Oil Contamination in Synthetic Based Mud (SBM). October 1998. Available from

API, 1220 L Street, NW, Washington, DC 20005–4070, 202–682–8000.

[66 FR 6901, Jan. 22, 2001; 66 FR 30811, June 8, 2001]

APPENDIX 7 TO SUBPART A OF PART 435—API RECOMMENDED PRACTICE 13B–2

1. DESCRIPTION

a. This procedure is specifically intended to measure the amount of non-aqueous drilling fluid (NAF) base fluid from cuttings generated during a drilling operation. This procedure is a retort test which measures all oily material (NAF base fluid) and water released from a cuttings sample when heated in a calibrated and properly operating ''Retort'' instrument.

b. In this retort test a known mass of cuttings is heated in the retort chamber to vaporize the liquids associated with the sample. The NAF base fluid and water vapors are then condensed, collected, and measured in a precision graduated receiver.

NOTE: Obtaining a representative sample requires special attention to the details of sample handling (e.g., location, method, frequency). See Addendum A and B for minimum requirements for collecting representative samples. Additional sampling procedures in a given area may be specified by the NPDES permit controlling authority.

2. EQUIPMENT

a. Retort instrument—The recommended retort instrument has a 50-cm^3 volume with an external heating jacket.

Retort Specifications:

1. Retort assembly—retort body, cup and lid.

(a) Material: 303 stainless steel or equivalent.

(b) Volume: Retort cup with lid.

Cup Volume: 50-cm^3.

Precision: ±0.25-cm^3.

2. Condenser—capable of cooling the oil and water vapors below their liquification temperature.

3. Heating jacket—nominal 350 watts.

4. Temperature control—capable of limiting temperature of retort to at least 930 °F (500 °C) and enough to boil off all NAFs.

b. Liquid receiver (10-cm^3, 20-cm^3)—the 10-cm^3 and 20-cm^3 receivers are specially designed cylindrical glassware with rounded bottom to facilitate cleaning and funnel-shaped top to catch falling drops. For compliance monitoring under the NPDES program, the analyst shall use the 10-cm^3 liquid receiver with 0.1 ml graduations to achieve greater accuracy.

1. Receiver specifications:

Total volume: 10-cm^3, 20-cm^3.

Precision (0 to 100%): ±0.05 cm^3, ±0.05 cm^3.

Outside diameter: 10-mm, 13-mm.

Wall thickness: 1.5±0.1mm, 1.2±0.1mm.

Frequency of graduation marks (0 to 100%): 0.10-cm^3, 0.10-cm^3.

Calibration: To contain ''TC'' @ 20 °C.

Scale: cm^3, cm^3

2. Material—Pyrex® or equivalent glass.

c. Toploading balance—capable of weighing 2000 g and precision of at least 0.1 g. Unless motion is a problem, the analyst shall use an electronic balance. Where motion is a problem, the analyst may use a triple beam balance.

d. Fine steel wool (No. 000)—for packing retort body.

e. Thread sealant lubricant: high temperature lubricant, e.g. Never-Seez® or equivalent.

f. Pipe cleaners—to clean condenser and retort stem.

g. Brush—to clean receivers.

h. Retort spatula—to clean retort cup.

i. Corkscrew—to remove spent steel wool.

3. PROCEDURE

a. Clean and dry the retort assembly and condenser.

b. Pack the retort body with steel wool.

c. Apply lubricant/sealant to threads of retort cup and retort stem.

d. Weigh and record the total mass of the retort cup, lid, and retort body with steel wool. This is mass (A), grams.

e. Collect a representative cuttings sample (*see* NOTE in Section 1 of this appendix).

f. Partially fill the retort cup with cuttings and place the lid on the cup.

g. Screw the retort cup (with lid) onto the retort body, weigh and record the total mass. This is mass (B), grams.

h. Attach the condenser. Place the retort assembly into the heating jacket.

i. Weigh and record the mass of the clean and dry liquid receiver. This is mass (C), grams. Place the receiver below condenser outlet.

j. Turn on the retort. Allow it to run a minimum of 1 hour.

NOTE: If solids boil over into receiver, the test shall be rerun. Pack the retort body with a greater amount of steel wool and repeat the test.

k. Remove the liquid receiver. Allow it to cool. Record the volume of water recovered. This is (V), cm^3.

NOTE: If an emulsion interface is present between the oil and water phases, heating the interface may break the emulsion. As a suggestion, remove the retort assembly from the heating jacket by grasping the condenser. Carefully heat the receiver along the emulsion band by gently touching the receiver for short intervals with the hot retort assembly. Avoid boiling the liquids. After the emulsion interface is broken, allow the liquid receiver to cool. Read the water volume at the lowest point of the meniscus.

l. Weigh and record the mass of the receiver and its liquid contents (oil plus water). This is mass (D), grams.

m. Turn off the retort. Remove the retort assembly and condenser from the heating jacket and allow them to cool. Remove the condenser.

n. Weigh and record the mass of the cooled retort assembly without the condenser. This is mass (E), grams.

o. Clean the retort assembly and condenser.

4. CALCULATIONS

a. Calculate the mass of oil (NAF base fluid) from the cuttings as follows:

1. Mass of the wet cuttings sample (M_w) equals the mass of the retort assembly with the wet cuttings sample (B) minus the mass of the empty retort assembly (A).

$M_w = B - A$ [1]

2. Mass of the dry retorted cuttings (M_D) equals the mass of the cooled retort assembly (E) minus the mass of the empty retort assembly (A).

$M_D = E - A$ [2]

3. Mass of the NAF base fluid (M_{BF}) equals the mass of the liquid receiver with its contents (D) minus the sum of the mass of the dry receiver (C) and the mass of the water (V).

$M_{BF} = D - (C + V)$ [3]

NOTE: Assuming the density of water is 1 g/cm^3, the volume of water is equivalent to the mass of the water.

b. Mass balance requirement:

The sum of M_D, M_{BF}, and V shall be within 5% of the mass of the wet sample.

$(M_D + M_{BF} + V)/M_w = 0.95$ to 1.05 [4]

The procedure shall be repeated if this requirement is not met.

c. Reporting oil from cuttings:

1. Assume that all oil recovered is NAF base fluid.

2. The mass percent NAF base fluid retained on the cuttings ($\%BF_i$) for the sampled discharge ''i'' is equal to 100 times the mass of the NAF base fluid (M_{BF}) divided by the mass of the wet cuttings sample (M_w).

$\%BF_i = (M_{BF}/M_w) \times 100$ [5]

Operators discharging small volume NAF-cuttings discharges which do not occur during a NAF-cuttings discharge sampling interval (i.e., displaced interfaces, accumulated solids in sand traps, pit clean-out solids, or centrifuge discharges while cutting mud weight) shall either: (a) Measure the mass percent NAF base fluid retained on the cuttings ($\%BF_{SVD}$) for each small volume NAF-cuttings discharges; or (b) use a default value of 25% NAF base fluid retained on the cuttings.

3. The mass percent NAF base fluid retained on the cuttings is determined for all cuttings wastestreams and includes fines discharges and any accumulated solids discharged [*see* Section 4.c.6 of this appendix for procedures on measuring or estimating the mass percent NAF base fluid retained on the cuttings (%BF) for dual gradient drilling seafloor discharges performed to ensure proper operation of subsea pumps].

4. A mass NAF-cuttings discharge fraction (X, unitless) is calculated for all NAF-cuttings, fines, or accumulated solids discharges every time a set of retorts is performed (*see* Section 4.c.6 of this appendix for procedures on measuring or estimating the mass NAF-cuttings discharge fraction (X) for dual gradient drilling seafloor discharges performed to ensure proper operation of subsea pumps). The mass NAF-cuttings discharge fraction (X) combines the mass of NAF-cuttings, fines, or accumulated solids discharged from a particular discharge over a set period of time with the total mass of NAF-cuttings, fines, or accumulated solids discharged into the ocean during the same period of time (*see* Addendum A and B of this appendix). The mass NAF-cuttings discharge fraction (X) for each discharge is calculated by direct measurement as:

$X_i = (F_i)/(G)$ [6]

where:

X_i = Mass NAF-cuttings discharge fraction for NAF-cuttings, fines, or accumulated solids discharge ''i'', (unitless)

F_i = Mass of NAF-cuttings discharged from NAF-cuttings, fines, or accumulated solids discharge ''i'' over a specified period of time (*see* Addendum A and B of this appendix), (kg)

G = Mass of all NAF-cuttings discharges into the ocean during the same period of time as used to calculate F_i, (kg)

If an operator has more than one point of NAF-cuttings discharge, the mass faction (X_i) must be determined by: (a) Direct measurement (*see* Equation 6 of this Appendix); (b) using the following default values of 0.85 and 0.15 for the cuttings dryer (e.g., horizontal centrifuge, vertical centrifuge, squeeze press, High-G linear shakers) and fines removal unit (e.g., decanting centrifuges, mud cleaners), respectively, when the operator is only discharging from the cuttings dryer and the fines removal unit; or (c) using direct measurement of ''F_i'' (*see* Equation 6 of this Appendix) for fines and accumulated solids, using Equation 6A of this Appendix to calculate ''G_{EST}'' for use as ''G'' in Equation 6 of this Appendix, and calculating the mass (kg) of NAF-cuttings discharged from the cuttings dryer (F_i) as the difference between the mass of ''G_{EST}'' calculated in Equation 6A of this appendix (kg) and the sum of all fines and accumulated solids mass directly measured (kg) (*see* Equation 6 of this Appendix).

G_{EST} = Estimated mass of all NAF-cuttings discharges into the ocean during the same period of time as used to calculate F_i (*see* Equation 6 of this Appendix), (kg) [6A]

where:

G_{EST} = Hole Volume (bbl) × (396.9 kg/bbl) × (1 + Z/100)

Z = The base fluid retained on cuttings limitation or standard (%) which apply to the NAF being discharge (*see* §§435.13. and 435.15).

Hole Volume (bbl) = [Cross-Section Area of NAF interval (in^2)] × Average Rate of Penetration (feet/hr) × period of time (min) used to calculate F_i (*see* Equation 6 of this Appendix) × (1 hr/60 min) × (1 bbl/5.61 ft^3) × (1 ft/12 in)^2

Cross-Section Area of NAF interval (in^2) = (3.14 × [Bit Diameter (in)]^2)/4

Bit Diameter (in) = Diameter of drilling bit for the NAF interval producing drilling cuttings during the same period of time as used to calculate F_i (*see* Equation 6 of this Appendix)

Average Rate of Penetration (feet/hr) = Arithmetic average of rate of penetration into the formation during the same period of time as used to calculate F_i (*see* Equation 6 of this Appendix)

NOTE: Operators with one NAF-cuttings discharge may set the mass NAF-cuttings discharge fraction (X_i) equal to 1.0.

5. Each NAF-cuttings, fines, or accumulated solids discharge has an associated mass percent NAF base fluid retained on cuttings value (%BF) and mass NAF-cuttings discharge fraction (X) each time a set of retorts is performed. A single total mass percent NAF base fluid retained on cuttings value ($\%BF_T$) is calculated every time a set of retorts is performed. The single total mass percent NAF base fluid retained on cuttings value ($\%BF_T$) is calculated as:

$$\%BF_{T,j} = \Sigma(X_i)\times(\%BF_i) \quad [7]$$

where:

$\%BF_{T,j}$ = Total mass percent NAF base fluid retained on cuttings value for retort set ''j'' (unitless as percentage, %)

X_i = Mass NAF-cuttings discharge fraction for NAF-cuttings, fines, or accumulated solids discharge ''i'', (unitless)

$\%BF_i$ = Mass percent NAF base fluid retained on the cuttings for NAF-cuttings, fines, or accumulated solids discharge ''i'' , (unitless as percentage, %)

NOTE: $\Sigma X_i = 1$.

Operators with one NAF-cuttings discharge may set $\%BF_{T,j}$ equal to $\%BF_i$.

6. Operators performing dual gradient drilling operations may require seafloor discharges of large cuttings (>¼′) to ensure the proper operation of subsea pumps (e.g., electrical submersible pumps). Operators performing dual gradient drilling operations which lead to seafloor discharges of large cuttings for the proper operation of subsea pumps shall either: (a) Measure the mass percent NAF base fluid retained on cuttings value (%BF) and mass NAF-cuttings discharge fraction (X) for seafloor discharges each time a set of retorts is performed; (b) use the following set of default values, (%BF=14%; X=0.15); or (c) use a combination of (a) and (b) (e.g., use a default value for %BF and measure X).

Additionally, operators performing dual gradient drilling operations which lead to seafloor discharges of large cuttings for the proper operation of subsea pumps shall also perform the following tasks:

(a) Use side scan sonar or shallow seismic to determine the presence of high density chemosynthetic communities. Chemosynthetic communities are assemblages of tube worms, clams, mussels, and bacterial mats that occur at natural hydrocarbon seeps or vents, generally in water depths of 500 meters or deeper. Seafloor discharges of large cuttings for the proper operation of subsea pumps shall not be permitted within 1000 feet of a high density chemosynthetic community.

(b) Seafloor discharges of large cuttings for the proper operation of subsea pumps shall be visually monitored and documented by a Remotely Operated Vehicle (ROV) within the tether limit (approximately 300 feet). The visual monitoring shall be conducted prior to each time the discharge point is relocated (cuttings discharge hose) and conducted along the same direction as the discharge hose position. Near-seabed currents shall be obtained at the time of the visual monitoring.

(c) Seafloor discharges of large cuttings for the proper operation of subsea pumps shall be directed within a 150 foot radius of the wellbore.

7. The weighted mass ratio averaged over all NAF well sections ($\%BF_{well}$) is the compliance value that is compared with the ''maximum weighted mass ratio averaged over all NAF well sections'' BAT discharge limitations (*see* the table in §435.13 and footnote 5 of the table in §435.43) or the ''maximum weighted mass ratio averaged over all NAF well sections'' NSPS discharge limitations (*see* the table in §435.15 and footnote 5 of the table in §435.45). The weighted mass ratio averaged over all NAF well sections ($\%BF_{well}$) is calculated as the arithmetic average of all total mass percent NAF base fluid retained on cuttings values ($\%BF_T$) and is given by the following expression:

$$\%BF_{well} = [j=1 \text{ to } j=n\ \Sigma\ (\%BF_{T,j})]/n \quad [8]$$

where:

$\%BF_{well}$ = Weighted mass ratio averaged over all NAF well sections (unitless as percentage, %)

$\%BF_{T,j}$ = Total mass percent NAF base fluid retained on cuttings value for retort set ''j'' (unitless as percentage, %)

n = Total number of retort sets performed over all NAF well sections (unitless)

Small volume NAF-cuttings discharges which do not occur during a NAF-cuttings discharge sampling interval (i.e., displaced interfaces, accumulated solids in sand traps, pit clean-out solids, or centrifuge discharges while cutting mud weight) shall be mass averaged with the arithmetic average of all total mass percent NAF base fluid retained on cuttings values (see Equation 8 of this Appendix). An additional sampling interval shall be added to the calculation of the weighted mass ratio averaged over all NAF well sections ($\%BF_{well}$). The mass fraction of the small volume NAF-cuttings discharges (X_{SVD}) will be determined by dividing the mass of the small volume NAF-cuttings discharges (F_{SVD}) by the total mass of NAF-cuttings discharges for the well drilling operation ($G_{WELL} + F_{SVD}$).

$X_{SVD} = F_{SVD} / (G_{WELL} + F_{SVD})$ [9]

where:

X_{SVD} = mass fraction of the small volume NAF-cuttings discharges (unitless)

F_{SVD} = mass of the small volume NAF-cuttings discharges (kg)

G_{WELL} = mass of total NAF-cuttings from the well (kg)

The mass of small volume NAF-cuttings discharges (F_{SVD}) shall be determined by multiplying the density of the small volume NAF-cuttings discharges (ρ_{svd}) times the volume of the small volume NAF-cuttings discharges (V_{SVD}).

$F_{SVD} = \rho_{svd} \times V_{SVD}$ [10]

where:

F_{SVD} = mass of small volume NAF-cuttings discharges (kg)

ρ_{svd} = density of the small volume NAF-cuttings discharges (kg/bbl)

V_{SVD} = volume of the small volume NAF-cuttings discharges (bbl)

The density of the small volume NAF-cuttings discharges shall be measured. The volume of small volume discharges (V_{SVD}) shall be either: (a) Be measured or (b) use default values of 10 bbl of SBF for each interface loss and 75 bbl of SBM for pit cleanout per well.

The total mass of NAF-cuttings discharges for the well (G_{WELL}) shall be either: (a) Measured; or (b) calculated by multiplying 1.0 plus the arithmetic average of all total mass percent NAF base fluid retained on cuttings values [see Equation 8 of this Appendix] times the total hole volume (V_{WELL}) for all NAF well sections times a default value for the density the formation of 2.5 g/cm³ (396.9 kg/bbl).

$$G_{WELL} = (1 + (\left[i = 1 \text{ to } j = n \sum (\%BF_{T,j})\right] / n)) \times V_{WELL}(\text{bbl}) \times 396.9(\text{kg/bbl}) \qquad [11]$$

where:

G_{WELL} = total mass of NAF-cuttings discharges for the well (kg)

$[j = 1 \text{ to } j = n\ \Sigma(\%BF_{T,j})]/n$ = see Equation 8 of this Appendix (unitless as a percentage)

V_{WELL} = total hole volume (V_{WELL}) for all NAF well sections (bbl)

The total hole volume of NAF well sections (V_{WELL}) will be calculated as:

$$V_{WELL}\ (\text{barrels}) = \sum \frac{\text{Bit diameter (in)}^2}{1029} \times \text{change in measured depth (ft)} \qquad [12]$$

For wells where small volume discharges associated with cuttings are made, $\%BF_{WELL}$ becomes:

$$\%BF_{WELL} = ((1 - X_{SVD}) \times \left[i = 1 \text{ to } j = n \sum \left(\%BF_{T,j}\right)\right] / n\ \ ) + X_{SVD} \times \%BF_{SVD} \qquad [13]$$

NOTE: See Addendum A and B to determine the sampling frequency to determine the total number of retort sets required for all NAF well sections.

8. The total number of retort sets (n) is increased by 1 for each sampling interval (*see* Section 2.4, Addendum A of this appendix) when all NAF cuttings, fines, or accumulated solids for that sampling interval are retained for no discharge. A zero discharge interval shall be at least 500 feet up to a maximum of three per day. This action has the effect of setting the total mass percent NAF base fluid retained on cuttings value ($\%BF_T$) at zero for that NAF sampling interval when all NAF cuttings, fines, or accumulated solids are retained for no discharge.

9. Operators that elect to use the Best Management Practices (BMPs) for NAF-cuttings shall use the procedures outlined in Addendum B.

ADDENDUM A TO APPENDIX 7 TO SUBPART A OF PART 435—SAMPLING OF CUTTINGS DISCHARGE STREAMS FOR USE WITH API RECOMMENDED PRACTICE 13B–2

1.0 SAMPLING LOCATIONS

1.1 Each NAF-cuttings waste stream that discharges into the ocean shall be sampled and analyzed as detailed in Appendix 7. NAF-cuttings discharges to the ocean may include discharges from primary shakers, secondary shakers, cuttings dryer, fines removal unit, accumulated solids, and any other cuttings separation device whose NAF-cuttings waste is discharged to the ocean. NAF-cuttings wastestreams not directly discharged to the ocean (*e.g.*, NAF-cuttings generated from shake shakers and sent to a cuttings dryer for additional processing) do not require sampling and analysis.

1.2 The collected samples shall be representative of each NAF-cuttings discharge. Operators shall conduct sampling to avoid the serious consequences of error (*i.e.*, bias or inaccuracy). Operators shall collect NAF-cuttings samples near the point of origin and before the solids and liquid fractions of the stream have a chance to separate from one another. For example, operators shall collect shale shaker NAF-cuttings samples at the point where NAF-cuttings are coming off the shale shaker and not from a holding container downstream where separation of larger particles from the liquid can take place.

1.3 Operators shall provide a simple schematic diagram of the solids control system and sample locations to the NPDES permit controlling authority.

2.0 TYPE OF SAMPLE AND SAMPLING FREQUENCY

2.1 Each NAF-cuttings, fines, or accumulated solids discharge has an associated mass percent NAF base fluid retained on cuttings value (%BF) and mass NAF-cuttings discharge fraction (X) for each sampling interval (*see* Section 2.4 of this addendum). Operators shall collect a single discrete NAF-cuttings sample for each NAF-cuttings waste stream discharged to the ocean during every sampling interval.

2.2 Operators shall use measured depth in feet from the Kelly bushing when samples are collected.

2.3 The NAF-cuttings samples collected for the mass fraction analysis (*see* Equation 6, Appendix 7 of Subpart A of this part) shall also be used for the retort analysis (*see* Equations 1–5, Appendix 7 of Subpart A of this part).

2.4 Operators shall collect and analyze at least one set of NAF-cuttings samples per day while discharging. Operators engaged in fast drilling (*i.e.*, greater than 500 linear NAF feet advancement of drill bit per day) shall collect and analyze one set of NAF-cuttings samples per 500 linear NAF feet of footage drilled. Operators are not required to collect and analyze more than three sets of NAF-cuttings samples per day (*i.e.*, three sampling intervals). Operators performing zero discharge of all NAF-cuttings (*i.e.*, all NAF cuttings, fines, or accumulated solids retained for no discharge) shall use the following periods to count sampling intervals: (1) One sampling interval per day when drilling is less than 500 linear NAF feet advancement of drill bit per day; and (2) one sampling interval per 500 linear NAF feet of footage drilled with a maximum of three sampling intervals per day.

2.5 The operator shall measure the individual masses (F_i, kg) and sum total mass (G, kg) (*see* Equation 6, Appendix 7 of subpart A of this part) over a representative period of time (*e.g.*, <10 minutes) during steady-state conditions for each sampling interval (*see* Section 2.4 of this addendum). The operator shall ensure that all NAF-cuttings are capture for mass analysis during the same sampling time period (*e.g.*, <10 minutes) at approximately the same time (*i.e.*, all individual mass samples collected within one hour of each other).

2.6 Operators using Best Management Practices (BMPs) to control NAF-cuttings discharges shall follow the procedures in Addendum B to Appendix 7 of subpart A of 40 CFR 435.

3.0 SAMPLE SIZE AND HANDLING

3.1 The volume of each sample depends on the volumetric flow rate (cm^3/s) of the NAF-cuttings stream and the sampling time period (*e.g.*, <10 minutes). Consequently, different solids control equipment units producing different NAF-cuttings waste streams at different volumetric flow rates will produce different size samples for the same period of time. Operators shall use appropriately sized sample containers for each NAF-cuttings waste stream to ensure no NAF-cuttings are spilled during sample collection. Operators shall use the same time period (*e.g.*, <10 minutes) to collect NAF-cuttings samples from each NAF-cuttings waste stream. Each NAF-cuttings sample size shall be at least one gallon. Operators shall clearly mark each container to identify each NAF-cuttings sample.

3.2 Operators shall not decant, heat, wash, or towel the NAF-cuttings to remove NAF base fluid before mass and retort analysis.

3.3 Operators shall first calculate the mass of each NAF-cuttings sample and perform the mass ratio analysis (*see* Equation 6, Appendix 7 of subpart A of this part). Operators with only one NAF-cuttings discharge may skip this step (*see* Section 4.c.4, Appendix 7 of subpart A of this part).

3.4 Operators shall homogenize (*e.g.*, stirring, shaking) each NAF-cuttings sample prior to placing a sub-sample into the retort

cup. The bottom of the NAF-cuttings sample container shall be examined to be sure that solids are not sticking to it.

3.5 Operators shall then calculate the NAF base fluid retained on cuttings using the retort procedure (*see* Equations 1–5, Appendix 7 of subpart A of this part). Operators shall start the retort analyses no more than two hours after collecting the first individual mass sample for the sampling interval .

3.6 Operators shall not discharge any sample before successfully completing the mass and retort analyses [i.e., mass balance requirements (*see* Section 4.b, Appendix 7 of subpart A of this part) are satisfied]. Operators shall immediately re-run the retort analyses if the mass balance requirements (*see* Equation 4, Appendix 7 of subpart A of this part) are not within a tolerance of 5% (*see* Section 4.b, Equation 4, Appendix 7 of subpart A of this part).

4.0 Calculations

4.1 Operators shall calculate a set of mass percent NAF base fluid retained on cuttings values (%BF) and mass NAF-cuttings discharge fractions (X) for each NAF-cuttings waste stream (*see* Section 1.1 of this addendum) for each sampling interval (*see* Section 2.4 of this addendum) using the procedures outlined in Appendix 7 of subpart A of this part.

4.2 Operators shall tabulate the following data for each individual NAF-cuttings sample: (1) Date and time of NAF-cuttings sample collection; (2) time period of NAF-cuttings sample collection (*see* Section 3.1 of this addendum); (3) mass and volume of each NAF-cuttings sample; (4) measured depth (feet) at NAF-cuttings sample collection (*see* Section 2.2 of this addendum); (5) respective linear feet of hole drilled represented by the NAF-cuttings sample (feet); and (6) the drill bit diameter (inches) used to generate the NAF-cuttings sample cuttings.

4.3 Operators shall calculate a single total mass percent NAF base fluid retained on cuttings value ($\%BF_T$) for each sampling interval (*see* Section 2.4 of this addendum) using the procedures outlined in Appendix 7 of Subpart A of this part.

4.4 Operators shall tabulate the following data for each total mass percent NAF base fluid retained on cuttings value ($\%BF_T$) for each NAF-cuttings sampling interval: (1) Date and starting and stopping times of NAF-cuttings sample collection and retort analyses; (2) measured depth of well (feet) at start of NAF-cuttings sample collection (*see* Section 2.2 of this addendum); (3) respective linear feet of hole drilled represented by the NAF-cuttings sample (feet); (4) the drill bit diameter (inches) used to generate the NAF-cuttings sample cuttings; and (5) annotation when zero discharge of NAF-cuttings is performed.

4.5 Operators shall calculate the weighted mass ratio averaged over all NAF well sections ($\%BF_{well}$) using the procedures outlined in Appendix 7 of Subpart A of this part.

4.6 Operators shall tabulate the following data for each weighted mass ratio averaged over all NAF well sections ($\%BF_{well}$) for each NAF well: (1) Starting and stopping dates of NAF well sections; (2) measured depth (feet) of all NAF well sections; (3) total number of sampling intervals (*see* Section 2.4 and Section 2.6 of this addendum); (4) number of sampling intervals tabulated during any zero discharge operations; (5) total volume of zero discharged NAF-cuttings over entire NAF well sections; and (6) identification of whether BMPs were employed (*see* Addendum B of Appendix 7 of subpart A of this part).

Addendum B to Appendix 7 to Subpart A of Part 435— Best Management Practices (BMPs) for use with API Recommended Practice 13B–2

1.0 Overview of BMPs

1.1 Best Management Practices (BMPs) are inherently pollution prevention practices. BMPs may include the universe of pollution prevention encompassing production modifications, operational changes, material substitution, materials and water conservation, and other such measures. BMPs include methods to prevent toxic and hazardous pollutants from reaching receiving waters. Because BMPs are most effective when organized into a comprehensive facility BMP Plan, operators shall develop a BMP in accordance with the requirements in this addendum.

1.2 The BMP requirements contained in this appendix were compiled from several Regional permits, an EPA guidance document (i.e., Guidance Document for Developing Best Management Practices (BMP)'' (EPA 833–B–93–004, U.S. EPA, 1993)), and draft industry BMPs. These common elements represent the appropriate mix of broad directions needed to complete a BMP Plan along with specific tasks common to all drilling operations.

1.3 Operators are not required to use BMPs if all NAF-cuttings discharges are monitored in accordance with Appendix 7 of Subpart A of this part.

2.0 BMP Plan Purpose and Objectives

2.1 Operators shall design the BMP Plan to prevent or minimize the generation and the potential for the discharge of NAF from the facility to the waters of the United States through normal operations and ancillary activities. The operator shall establish specific objectives for the control of NAF by conducting the following evaluations.

2.2 The operator shall identify and document each NAF well that uses BMPs before

starting drilling operations and the anticipated total feet to be drilled with NAF for that particular well.

2.3 Each facility component or system controlled through use of BMPs shall be examined for its NAF-waste minimization opportunities and its potential for causing a discharge of NAF to waters of the United States due to equipment failure, improper operation, natural phenomena (e.g., rain, snowfall).

2.4 For each NAF wastestream controlled through BMPs where experience indicates a reasonable potential for equipment failure (e.g., a tank overflow or leakage), natural condition (e.g., precipitation), or other circumstances to result in NAF reaching surface waters, the BMP Plan shall include a prediction of the total quantity of NAF which could be discharged from the facility as a result of each condition or circumstance.

3.0 BMP Plan Requirements

3.1 The BMP Plan may reflect requirements within the pollution prevention requirements required by the Minerals Management Service (*see* 30 CFR 250.300) or other Federal or State requirements and incorporate any part of such plans into the BMP Plan by reference.

3.2 The operator shall certify that its BMP Plan is complete, on-site, and available upon request to EPA or the NPDES Permit controlling authority. This certification shall identify the NPDES permit number and be signed by an authorized representative of the operator. This certification shall be kept with the BMP Plan. For new or modified NPDES permits, the certification shall be made no later than the effective date of the new or modified permit. For existing NPDES permits, the certification shall be made within one year of permit issuance.

3.3 The BMP Plan shall:

3.3.1 Be documented in narrative form, and shall include any necessary plot plans, drawings or maps, and shall be developed in accordance with good engineering practices. At a minimum, the BMP Plan shall contain the planning, development and implementation, and evaluation/reevaluation components. Examples of these components are contained in ''Guidance Document for Developing Best Management Practices (BMP)'' (EPA 833–B–93–004, U.S. EPA, 1993).

3.3.2 Include the following provisions concerning BMP Plan review.

3.3.2.1 Be reviewed by permittee's drilling engineer and offshore installation manager (OIM) to ensure compliance with the BMP Plan purpose and objectives set forth in Section 2.0.

3.3.2.2 Include a statement that the review has been completed and that the BMP Plan fulfills the BMP Plan purpose and objectives set forth in Section 2.0. This statement shall have dated signatures from the permittee's drilling engineer and offshore installation manager and any other individuals responsible for development and implementation of the BMP Plan.

3.4 Address each component or system capable of generating or causing a release of significant amounts of NAF and identify specific preventative or remedial measures to be implemented.

4.0 BMP Plan Documentation

4.1 The operator shall maintain a copy of the BMP Plan and related documentation (e.g., training certifications, summary of the monitoring results, records of NAF-equipment spills, repairs, and maintenance) at the facility and shall make the BMP Plan and related documentation available to EPA or the NPDES Permit controlling authority upon request.

5.0 BMP Plan Modification

5.1 For those NAF wastestreams controlled through BMPs, the operator shall amend the BMP Plan whenever there is a change in the facility or in the operation of the facility which materially increases the generation of those NAF-wastes or their release or potential release to the receiving waters.

5.2 At a minimum the BMP Plan shall be reviewed once every five years and amended within three months if warranted. Any such changes to the BMP Plan shall be consistent with the objectives and specific requirements listed in this addendum. All changes in the BMP Plan shall be reviewed by the permittee's drilling engineer and offshore installation manager.

5.3 At any time, if the BMP Plan proves to be ineffective in achieving the general objective of preventing and minimizing the generation of NAF-wastes and their release and potential release to the receiving waters and/or the specific requirements in this addendum, the permit and/or the BMP Plan shall be subject to modification to incorporate revised BMP requirements.

6.0 Specific Pollution Prevention Requirements for NAF Discharges Associated with Cuttings

6.1 The following specific pollution prevention activities are required in a BMP Plan when operators elect to control NAF discharges associated with cuttings by a set of BMPs.

6.2 Establishing programs for identifying, documenting, and repairing malfunctioning NAF equipment, tracking NAF equipment repairs, and training personnel to report and evaluate malfunctioning NAF equipment.

6.3 Establishing operating and maintenance procedures for each component in the

solids control system in a manner consistent with the manufacturer's design criteria.

6.4 Using the most applicable spacers, flushes, pills, and displacement techniques in order to minimize contamination of drilling fluids when changing from water-based drilling fluids to NAF and vice versa.

6.5 A daily retort analysis shall be performed (in accordance with Appendix 7 to subpart A of Part 435) during the first 0.33 X feet drilled with NAF where X is the anticipated total feet to be drilled with NAF for that particular well. The retort analyses shall be documented in the well retort log. The operators shall use the calculation procedures detailed in Appendix 7 to subpart A of part 435 (*see* Equations 1 through 8) to determine the arithmetic average ($\%BF_{well}$) of the retort analyses taken during the first 0.33 X feet drilled with NAF.

6.5.1 When the arithmetic average ($\%BF_{well}$) of the retort analyses taken during the first 0.33 X feet drilled with NAF is less than or equal to the base fluid retained on cuttings limitation or standard (*see* §§ 435.13 and 435.15), retort monitoring of cuttings may cease for that particular well. The same BMPs and drilling fluid used during the first 0.33 X feet shall be used for all remaining NAF sections for that particular well.

6.5.2 When the arithmetic average ($\%BF_{well}$) of the retort analyses taken during the first 0.33 X feet drilled with NAF is greater the base fluid retained on cuttings limitation or standard (*see* §§ 435.13 and 435.15), retort monitoring shall continue for the following (second) 0.33 X feet drilled with NAF where X is the anticipated total feet to be drilled with NAF for that particular well. The retort analyses for the first and second 0.33 X feet shall be documented in the well retort log.

6.5.2.1 When the arithmetic average ($\%BF_{well}$) of the retort analyses taken during the first 0.66 X feet (i.e., retort analyses taken from first and second 0.33 X feet) drilled with NAF is less than or equal to the base fluid retained on cuttings limitation or standard (*see* §§ 435.13 and 435.15), retort monitoring of cuttings may cease for that particular well. The same BMPs and drilling fluid used during the first 0.66 X feet shall be used for all remaining NAF sections for that particular well.

6.5.2.2 When the arithmetic average ($\%BF_{well}$) of the retort analyses taken during the first 0.66 X feet (i.e., retort analyses taken from first and second 0.33 X feet) drilled with NAF is greater than the base fluid retained on cuttings limitation or standard (*see* §§ 435.13 and 435.15), retort monitoring shall continue for all remaining NAF sections for that particular well. The retort analyses for all NAF sections shall be documented in the well retort log.

6.5.3 When the arithmetic average ($\%BF_{well}$) of the retort analyses taken over all NAF sections for the entire well is greater that the base fluid retained on cuttings limitation or standard (*see* §§ 435.13 and 435.15), the operator is in violation of the base fluid retained on cuttings limitation or standard and shall submit notification of these monitoring values in accordance with NPDES permit requirements. Additionally, the operator shall, as part of the BMP Plan, initiate a reevaluation and modification to the BMP Plan in conjunction with equipment vendors and/or industry specialists.

6.5.4 The operator shall include retort monitoring data and dates of retort-monitored and non-retort-monitored NAF-cuttings discharges managed by BMPs in their NPDES permit reports.

6.6 Establishing mud pit and equipment cleaning methods in such a way as to minimize the potential for building-up drill cuttings (including accumulated solids) in the active mud system and solids control equipment system. These cleaning methods shall include but are not limited to the following procedures.

6.6.1 Ensuring proper operation and efficiency of mud pit agitation equipment.

6.6.2 Using mud gun lines during mixing operations to provide agitation in dead spaces.

6.6.3 Pumping drilling fluids off of drill cuttings (including accumulated solids) for use, recycle, or disposal before using wash water to dislodge solids.

[66 FR 6901, Jan. 22, 2001; 66 FR 30811, June 8, 2001]

APPENDIX 8 TO SUBPART A OF PART 435—REFERENCE C_{16}–C_{18} INTERNAL OLEFIN DRILLING FLUID FORMULATION

The reference C_{16}–C_{18} internal olefin drilling fluid used to determine the drilling fluid sediment toxicity ratio and compliance with the BAT sediment toxicity discharge limitation (*see* § 435.13) and NSPS (*see* § 435.15) shall be formulated to meet the specifications in Table 1 of this appendix.

Drilling fluid sediment toxicity ratio = 4-day LC_{50} of C_{16}–C_{18} internal olefin drilling fluid/4-day LC_{50} of drilling fluid removed from cuttings at the solids control equipment as determined by ASTM E1367–92 [incorporated by reference and specified at § 435.11(ee)] and supplemented with the sediment preparation procedure (Appendix 3 of subpart A of this part).

TABLE 1.—PROPERTIES FOR REFERENCE C_{16}–C_{18} IOS SBF USED IN DISCHARGE SEDIMENT TOXICITY TESTING

Mud weight of SBF discharged with cuttings (pounds per gallon)	Reference C_{16}–C_{18} IOs SBF (pounds per gallon)	Reference C_{16}–C_{18} IOs SBF synthetic to water ratio (%)
8.5–11	9.0	75/25
11–14	11.5	80/20
>14	14.5	85/15
Plastic Viscosity (PV), centipoise (cP)	12–30	
Yield Point (YP), pounds/100 sq. ft	10–20	
10-second gel, pounds/100 sq. ft	8–15	
10-minute gel, pounds/100 sq. ft	12–30	
Electrical stability, V	>300	

[66 FR 6901, Jan. 22, 2001]

Subpart B [Reserved]

Subpart C—Onshore Subcategory

§ 435.30 Applicability; description of the onshore subcategory.

The provisions of this subpart are applicable to those facilities engaged in the production, field exploration, drilling, well completion and well treatment in the oil and gas extraction industry which are located landward of the inner boundary of the territorial seas as defined in 40 CFR 125.1(gg) and which are not included within subpart D, E, or F, *Provided, however,* That the applicability of this subpart to (a) facilities in existence on April 13, 1979 or thereafter engaged in the production, field exploration, drilling, well completion and well treatment in the oil and gas extraction industry which are located on land and which would have been considered ''coastal'' as defined under the interim final regulations for this industry (40 CFR 435.41, 41 FR 44942, October 13, 1976) or which are (b) located in the Santa Maria Basin of California is suspended.

(Secs. 301, 304(b) and 501 of the Clean Water Act as amended, 33 U.S.C. 1251 *et seq.)*

[44 FR 22075, Apr. 13, 1979, as amended at 47 FR 31555, July 21, 1982]

§ 435.31 Specialized definitions.

For the purpose of this subpart:

(a) The general definitions, abbreviations, and methods of analysis set forth in 40 CFR part 401 shall apply to this subpart.

§ 435.32 Effluent limitations guidelines representing the degree of effluent reduction attainable by the application of the best practicable control technology currently available.

Except as provided in §§ 125.30 through 125.32, any existing point source subject to this subpart shall achieve the following effluent limitations representing the degree of effluent reduction attainable by the application of the best practicable control technology currently available (BPT): there shall be no discharge of waste water pollutants into navigable waters from any source associated with production, field exploration, drilling, well completion, or well treatment (i.e., produced water, drilling muds, drill cuttings, and produced sand).

[60 FR 33966, June 29, 1995]

Subpart D—Coastal Subcategory

SOURCE: 61 FR 66125, Dec. 16, 1996, unless otherwise noted.

§ 435.40 Applicability; description of the coastal subcategory.

The provisions of this subpart are applicable to those facilities engaged in field exploration, drilling, well production, and well treatment in the oil and gas industry in areas defined as ''coastal.'' The term ''coastal'' shall mean:

(a) Any location in or on a water of the United States landward of the inner boundary of the territorial seas; or

(b)(1) Any location landward from the inner boundary of the territorial seas and bounded on the inland side by the

line defined by the inner boundary of the territorial seas eastward of the point defined by 89°45′ West Longitude and 29°46′ North Latitude and continuing as follows west of that point:

Direction to west longitude	Direction to north latitude
West, 89°48′	North, 29°50′.
West, 90°12′	North, 30°06′.
West, 90°20′	South, 29°35′.
West, 90°35′	South, 29°30′.
West, 90°43′	South, 29°25′.
West, 90°57′	North, 29°32′.
West, 91°02′	North, 29°40′.
West, 91°14′	South, 29°32′.
West, 91°27′	North, 29°37′.
West, 91°33′	North, 29°46′.
West, 91°46′	North, 29°50′.
West, 91°50′	North, 29°55′.
West, 91°56′	South, 29°50′.
West, 92°10′	South, 29°44′.
West, 92°55′	North, 29°46′.
West, 93°15′	North, 30°14′.
West, 93°49′	South, 30°07′.
West, 94°03′	South, 30°03′.
West, 94°10′	South, 30°00′.
West, 94°20′	South, 29°53′.
West, 95°00′	South, 29°35′.
West, 95°13′	South, 29°28′.
East, 95°08′	South, 29°15′.
West, 95°11′	South, 29°08′.
West, 95°22′	South, 28°56′.
West, 95°30′	South, 28°55′.
West, 95°33′	South, 28°49′.
West, 95°40′	South, 28°47′.
West, 96°42′	South, 28°41′.
East, 96°40′	South, 28°28′.
West, 96°54′	South, 28°20′.
West, 97°03′	South, 28°13′.
West, 97°15′	South, 27°58′.
West, 97°40′	South, 27°45′.
West, 97°46′	South, 27°28′.
West, 97°51′	South, 27°22′.
East, 97°46′	South, 27°14′.
East, 97°30′	South, 26°30′.
East, 97°26′	South, 26°11′.

(2) East to 97°19′ West Longitude and Southward to the U.S.-Mexican border.

§ 435.41 Specialized definitions.

For the purpose of this subpart:

(a) Except as provided below, the general definitions, abbreviations and methods of analysis set forth in 40 CFR part 401 shall apply to this subpart.

(b) *Average of daily values for 30 consecutive days* means the average of the daily values obtained during any 30 consecutive day period.

(c) *Base fluid* means the continuous phase or suspending medium of a drilling fluid formulation.

(d) *Base fluid retained on cuttings* as applied to BAT effluent limitations and NSPS refers to the American Petroleum Institute Recommended Practice 13B–2 supplemented with the specifications, sampling methods, and averaging method for retention values provided in Appendix 7 of subpart A of this part.

(e) *Biodegradation rate* as applied to BAT effluent limitations and NSPS for drilling fluids and drill cuttings refers to the ISO 11734:1995 method: ''Water quality—Evaluation of the 'ultimate' anaerobic biodegradability of organic compounds in digested sludge—Method by measurement of the biogas production (1995 edition)'' (Available from the American National Standards Institute, 11 West 42nd Street, 13th Floor, New York, NY 10036) supplemented with modifications in Appendix 4 of subpart A of this part.

(f) *Cook Inlet* refers to coastal locations north of the line between Cape Douglas on the West and Port Chatham on the east.

(g) *Daily values* as applied to produced water effluent limitations and NSPS means the daily measurements used to assess compliance with the maximum for any one day.

(h) *Deck drainage* means any waste resulting from deck washings, spillage, rainwater, and runoff from gutters and drains including drip pans and work areas within facilities subject to this Subpart.

(i) *Development facility* means any fixed or mobile structure subject to this Subpart that is engaged in the drilling of productive wells.

(j) *Dewatering effluent* means wastewater from drilling fluids and drill cuttings dewatering activities (including but not limited to reserve pits or other tanks or vessels, and chemical or mechanical treatment occurring during the drilling solids separation/recycle/disposal process).

(k) *Diesel oil* refers to the grade of distillate fuel oil, as specified in the American Society for Testing and Materials Standard Specification for Diesel Fuel Oils D975–91, that is typically used as the continuous phase in conventional oil-based drilling fluids. This incorporation by reference was approved by the Director of the Federal Register in accordance with 5 U.S.C. 552(a) and 1 CFR part 51. Copies may be obtained from the American Society for Testing and Materials, 1916 Race

Street, Philadelphia, PA 19103. Copies may be inspected at the Office of the Federal Register, 800 North Capitol Street, NW., Suite 700, Washington, DC. A copy may also be inspected at EPA's Water Docket, 401 M Street SW., Washington, DC 20460.

(l) *Domestic waste* means the materials discharged from sinks, showers, laundries, safety showers, eye-wash stations, hand-wash stations, fish cleaning stations, and galleys located within facilities subject to this Subpart.

(m) *Drill cuttings* means the particles generated by drilling into subsurface geologic formations and carried out from the wellbore with the drilling fluid. Examples of drill cuttings include small pieces of rock varying in size and texture from fine silt to gravel. Drill cuttings are generally generated from solids control equipment and settle out and accumulate in quiescent areas in the solids control equipment or other equipment processing drilling fluid (i.e., accumulated solids).

(1) *Wet drill cuttings* means the unaltered drill cuttings and adhering drilling fluid and formation oil carried out from the wellbore with the drilling fluid.

(2) *Dry drill cuttings* means the residue remaining in the retort vessel after completing the retort procedure specified in Appendix 7 of subpart A of this part.

(n) *Drilling fluid* means the circulating fluid (mud) used in the rotary drilling of wells to clean and condition the hole and to counterbalance formation pressure. Classes of drilling fluids are:

(1) *Water-based drilling fluid* means the continuous phase and suspending medium for solids is a water-miscible fluid, regardless of the presence of oil.

(2) *Non-aqueous drilling fluid* means the continuous phase and suspending medium for solids is a water-immiscible fluid, such as oleaginous materials (e.g., mineral oil, enhanced mineral oil, paraffinic oil, C_{16}–C_{18} internal olefins, and C_8–C_{16} fatty acid/2-ethylhexyl esters).

(i) *Oil-based* means the continuous phase of the drilling fluid consists of diesel oil, mineral oil, or some other oil, but contains no synthetic material or enhanced mineral oil.

(ii) *Enhanced mineral oil-based* means the continuous phase of the drilling fluid is enhanced mineral oil.

(iii) *Synthetic-based* means the continuous phase of the drilling fluid is a synthetic material or a combination of synthetic materials.

(o) *Enhanced mineral oil* as applied to enhanced mineral oil-based drilling fluid means a petroleum distillate which has been highly purified and is distinguished from diesel oil and conventional mineral oil in having a lower polycyclic aromatic hydrocarbon (PAH) content. Typically, conventional mineral oils have a PAH content on the order of 0.35 weight percent expressed as phenanthrene, whereas enhanced mineral oils typically have a PAH content of 0.001 or lower weight percent PAH expressed as phenanthrene.

(p) *Exploratory facility* means any fixed or mobile structure subject to this Subpart that is engaged in the drilling of wells to determine the nature of potential hydrocarbon reservoirs.

(q) *Formation oil* means the oil from a producing formation which is detected in the drilling fluid, as determined by the GC/MS compliance assurance method specified in Appendix 5 of subpart A of this part when the drilling fluid is analyzed before being shipped offshore, and as determined by the RPE method specified in Appendix 6 of subpart A of this part when the drilling fluid is analyzed at the offshore point of discharge. Detection of formation oil by the RPE method may be confirmed by the GC/MS compliance assurance method, and the results of the GC/MS compliance assurance method shall supercede those of the RPE method.

(r) *Garbage* means all kinds of victual, domestic, and operational waste, excluding fresh fish and parts thereof, generated during the normal operation of coastal oil and gas facility and liable to be disposed of continuously or periodically, except dishwater, graywater, and those substances that are defined or listed in other Annexes to MARPOL 73/78. A copy of MARPOL may be inspected at EPA's Water Docket; 1200 Pennsylvania Ave., NW., Washington, DC 20460.

(s) *M9IM* means those offshore facilities continuously manned by nine (9) or fewer persons or only intermittently manned by any number of persons.

(t) *M10* means those offshore facilities continuously manned by ten (10) or more persons.

(u) *Maximum* as applied to BAT effluent limitations and NSPS for drilling fluids and drill cuttings means the maximum concentration allowed as measured in any single sample of the barite for determination of cadmium and mercury content.

(v) *Maximum for any one day* as applied to BPT, BCT and BAT effluent limitations and NSPS for oil and grease in produced water means the maximum concentration allowed as measured by the average of four grab samples collected over a 24-hour period that are analyzed separately. Alternatively, for BAT and NSPS the maximum concentration allowed may be determined on the basis of physical composition of the four grab samples prior to a single analysis.

(w) *Minimum* as applied to BAT effluent limitations and NSPS for drilling fluids and drill cuttings means the minimum 96-hour LC_{50} value allowed as measured in any single sample of the discharged waste stream. *Minimum* as applied to BPT and BCT effluent limitations and NSPS for sanitary wastes means the minimum concentration value allowed as measured in any single sample of the discharged waste stream.

(x)(1) *New source* means any facility or activity of this subcategory that meets the definition of ''new source'' under 40 CFR 122.2 and meets the criteria for determination of new sources under 40 CFR 122.29(b) applied consistently with all of the following definitions:

(i) *Water area* as used in ''site'' in 40 CFR 122.29 and 122.2 means the water area and water body floor beneath any exploratory, development, or production facility where such facility is conducting its exploratory, development or production activities.

(ii) *Significant site preparation work* as used in 40 CFR 122.29 means the process of surveying, clearing or preparing an area of the water body floor for the purpose of constructing or placing a development or production facility on or over the site.

(2) ''New Source'' does not include facilities covered by an existing NPDES permit immediately prior to the effective date of these guidelines pending EPA issuance of a new source NPDES permit.

(y) *No discharge of free oil* means that waste streams may not be discharged that contain free oil as evidenced by the monitoring method specified for that particular stream, e.g., deck drainage or miscellaneous discharges cannot be discharged when they would cause a film or sheen upon or discoloration of the surface of the receiving water; drilling fluids or cuttings may not be discharged when they fail the static sheen test defined in Appendix 1 of subpart A of this part.

(z) Parameters that are regulated in this subpart and listed with approved methods of analysis in Table 1B at 40 CFR 136.3 are defined as follows:

(1) *Cadmium* means total cadmium.

(2) *Chlorine* means total residual chlorine.

(3) *Mercury* means total mercury.

(4) *Oil and Grease* means total recoverable oil and grease.

(aa) *Produced sand* means the slurried particles used in hydraulic fracturing, the accumulated formation sands and scales particles generated during production. Produced sand also includes desander discharge from the produced water waste stream, and blowdown of the water phase from the produced water treating system.

(bb) *Produced water* means the water (brine) brought up from the hydrocarbon-bearing strata during the extraction of oil and gas, and can include formation water, injection water, and any chemicals added downhole or during the oil/water separation process.

(cc) *Production facility* means any fixed or mobile structure subject to this subpart that is either engaged in well completion or used for active recovery of hydrocarbons from producing formations. It includes facilities that are engaged in hydrocarbon fluids separation even if located separately from wellheads.

(dd) *Sanitary waste* means the human body waste discharged from toilets and

urinals located within facilities subject to this subpart.

(ee) *SPP toxicity* as applied to BAT effluent limitations and NSPS for drilling fluids and drill cuttings refers to the bioassay test procedure presented in Appendix 2 of subpart A of this part.

(ff) *Static sheen test* means the standard test procedure that has been developed for this industrial subcategory for the purpose of demonstrating compliance with the requirement of no discharge of free oil. The methodology for performing the static sheen test is presented in Appendix 1 of subpart A of this part.

(gg) *Stock barite* means the barite that was used to formulate a drilling fluid.

(hh) *Synthetic material* as applied to synthetic-based drilling fluid means material produced by the reaction of specific purified chemical feedstock, as opposed to the traditional base fluids such as diesel and mineral oil which are derived from crude oil solely through physical separation processes. Physical separation processes include fractionation and distillation and/or minor chemical reactions such as cracking and hydro processing. Since they are synthesized by the reaction of purified compounds, synthetic materials suitable for use in drilling fluids are typically free of polycyclic aromatic hydrocarbons (PAH's) but are sometimes found to contain levels of PAH up to 0.001 weight percent PAH expressed as phenanthrene. Internal olefins and vegetable esters are two examples of synthetic materials suitable for use by the oil and gas extraction industry in formulating drilling fluids. Internal olefins are synthesized from the isomerization of purified straight-chain (linear) hydrocarbons such as C_{16}–C_{18} linear alpha olefins. C_{16}–C_{18} linear alpha olefins are unsaturated hydrocarbons with the carbon to carbon double bond in the terminal position. Internal olefins are typically formed from heating linear alpha olefins with a catalyst. The feed material for synthetic linear alpha olefins is typically purified ethylene. Vegetable esters are synthesized from the acid-catalyzed esterification of vegetable fatty acids with various alcohols. EPA listed these two branches of synthetic fluid base materials to provide examples, and EPA does not mean to exclude other synthetic materials that are either in current use or may be used in the future. A synthetic-based drilling fluid may include a combination of synthetic materials.

(ii) *Well completion fluids* means salt solutions, weighted brines, polymers, and various additives used to prevent damage to the well bore during operations which prepare the drilled well for hydrocarbon production.

(jj) *Well treatment fluids* means any fluid used to restore or improve productivity by chemically or physically altering hydrocarbon-bearing strata after a well has been drilled.

(kk) *Workover fluids* means salt solutions, weighted brines, polymers, or other specialty additives used in a producing well to allow for maintenance, repair or abandonment procedures.

(ll) *96-hour LC_{50}* means the concentration (parts per million) or percent of the suspended particulate phase (SPP) from a sample that is lethal to 50 percent of the test organisms exposed to that concentration of the SPP after 96 hours of constant exposure.

[61 FR 66125, Dec. 16, 1996; 62 FR 1681, Jan. 13, 1997, as amended at 66 FR 6914, Jan. 22, 2001]

§ 435.42 Effluent limitations guidelines representing the degree of effluent reduction attainable by the application of the best practicable control technology currently available (BPT).

Except as provided in 40 CFR 125.30–125.32, any existing point source subject to this Subpart must achieve the following effluent limitations representing the degree of effluent reduction attainable by the application of the best practicable control technology currently available.

BPT EFFLUENT LIMITATIONS—OIL AND GREASE

[In milligrams per liter]

Pollutant parameter waste source	Maximum for any 1 day	Average of values for 30 consecutive days shall not exceed	Residual chlorine minimum for any 1 day
Produced water	72	48	NA
Deck drainage	(1)	(1)	NA
Water-based:			
Drilling fluids	(1)	(1)	NA
Drill Cuttings	(1)	(1)	NA
Non-aqueous:			
Drilling fluids	No discharge	No discharge	NA
Drill Cuttings	(1)	(1)	NA
Well treatment, workover, and completion fluids	(1)	(1)	NA
Sanitary:			
M10	NA	NA	[2] 1
M9IM [3]	NA	NA	NA
Domestic [3]	NA	NA	NA
Produced sand	Zero discharge	Zero discharge	NA

[1] No discharge of free oil.
[2] Minimum of 1 mg/l and maintained as close to this concentration as possible.
[3] There shall be no floating solids as a result of the discharge of these wastes.

[61 FR 66125, Dec. 16, 1996, as amended at 66 FR 6916, Jan. 22, 2001]

§ 435.43 Effluent limitations guidelines representing the degree of effluent reduction attainable by the application of the best available technology economically achievable (BAT).

Except as provided in 40 CFR 125.30–125.32, any existing point source subject to this Subpart must achieve the following effluent limitations representing the degree of effluent reduction attainable by the application of the best available technology economically achievable (BAT):

BAT EFFLUENT LIMITATIONS

Stream	Pollutant parameter	BAT effluent limitations
Produced Water:		
(A) All coastal areas except Cook Inlet		No discharge.
(B) Cook Inlet	Oil & Grease	The maximum for any one day shall not exceed 42 mg/l, and the 30-day average shall not exceed 29 mg/l.
Drilling Fluids, Drill Cuttings, and Dewatering Effluent: [1]		
(A) All coastal areas except Cook Inlet		No discharge.
(B) Cook Inlet:.		
Water-based drilling fluids, drill cuttings, and dewatering effluent.	SPP Toxicity	Minimum 96-hour LC_{50} of the SPP Toxicity Test [4] shall be 3% by volume.
	Free oil	No discharge.[2]
	Diesel oil	No discharge.
	Mercury	1 mg/kg dry weight maximum in the stock barite.
	Cadmium	3 mg/kg dry weight maximum in the stock barite.
Non-aqueous drilling fluids and dewatering effluent.		No discharge.
Drill cuttings associated with non-aqueous drilling fluids.		No discharge.[5]
Well Treatment, Workover and Completion Fluids:		
(A) All coastal areas except Cook Inlet		No discharge.
(B) Cook Inlet	Oil & Grease	The maximum for any one day shall not exceed 42 mg/l, and the 30-day average shall not exceed 29 mg/l.
Produced Sand		No discharge.
Deck Drainage	Free Oil [3]	No discharge.

BAT EFFLUENT LIMITATIONS—Continued

Stream	Pollutant parameter	BAT effluent limitations
Domestic Waste	Foam	No discharge.

[1] BAT limitations for dewatering effluent are applicable prospectively, BAT limitations in this rule are not applicable to discharges of dewatering effluent from reserve pits which as of the effective date of this rule no longer receive drilling fluids and drill cuttings. Limitations on such discharges shall be determined by the NPDES permit issuing authority.
[2] As determined by the static sheen test (see appendix 1 to 40 CFR Part 435, subpart A).
[3] As determined by the presence of a film or sheen upon or a discoloration of the surface of the receiving water (visual sheen).
[4] As determined by the suspended particulate phase (SPP) toxicity test (*see* Appendix 2 of Subpart A of this part).
[5] When Cook Inlet operators cannot comply with this no discharge requirement due to technical limitations (*see* Appendix 1 of Subpart D of this part), Cook Inlet operators shall meet the same stock limitations (C_{16}-C_{18} internal olefin) and discharge limitations for drill cuttings associated with non-aqueous drilling fluids for operators in Offshore waters (*see* § 435.13) in order to discharge drill cuttings associated with non-aqueous drilling fluids.

[61 FR 66125, Dec. 16, 1996; 62 FR 1681, Jan. 13, 1997, as amended at 66 FR 6917, Jan. 22, 2001]

§ 435.44 Effluent limitations guidelines representing the degree of effluent reduction attainable by the application of the best conventional pollutant control technology (BCT).

Except as provided in 40 CFR 125.30–125.32, any existing point source subject to this Subpart must achieve the following effluent limitations representing the degree of effluent reduction attainable by the application of the best conventional pollutant control technology (BCT):

BCT EFFLUENT LIMITATIONS

Stream	Pollutant parameter	BCT effluent limitations
Produced Water (all facilities)	Oil & Grease	The maximum for any one day shall not exceed 72 mg/l and the 30-day average shall not exceed 48 mg/l.
Drilling Fluids and Drill Cuttings and Dewatering Effluent:[1]		
All facilities except Cook Inlet		No discharge.
Cook Inlet:.		
Water-based drilling fluids, drill cuttings, and dewatering effluent.	Free Oil	No discharge.[2]
Non-aqueous drilling fluids and dewatering effluent.		No discharge.
Drill cuttings associated with non-aqueous drilling fluids.	Free Oil	No discharge.[2]
Well Treatment, Workover and Completion Fluids.	Free Oil	No discharge.[2]
Produced Sand		No discharge.
Deck Drainage	Free Oil	No discharge.[3]
Sanitary Waste:		
Sanitary M10	Residual Chlorine	Minimum of 1 mg/l maintained as close to this concentration as possible.
Sanitary M91M	Floating Solids	No discharge.
Domestic Waste	Floating Solids and garbage	No discharge of Floating Solids or garbage.

[1] BCT limitations for dewatering effluent are applicable prospectively. BCT limitations in this rule are not applicable to discharges of dewatering effluent from reserve pits which as of the effective date of this rule no longer receive drilling fluids and drill cuttings. Limitations on such discharges shall be determined by the NPDES permit issuing authority.
[2] As determined by the static sheen test (see appendix 1 to 40 CFR part 435, subpart A).
[3] As determined by the presence of a film or sheen upon or a discoloration of the surface of the receiving water (visual sheen).

[61 FR 66125, Dec. 16, 1996; 62 FR 1682, Jan. 13, 1997, as amended at 66 FR 6917, Jan. 22, 2001]

§ 435.45 Standards of performance for new sources (NSPS).

Any new source subject to this subpart must achieve the following new source performance standards (NSPS):

NSPS EFFLUENT LIMITATIONS

Stream	Pollutant parameter	NSPS effluent limitations
Produced Water:		
(A) All coastal areas except Cook Inlet		No discharge.
(B) Cook Inlet	Oil & Grease	The maximum for any one day shall not exceed 42 mg/l, and the 30-day average shall not exceed 29 mg/l.
Drilling Fluids, Drill Cuttings, and Dewatering Effluent: [1]		
(A) All coastal areas except Cook Inlet		No discharge.
(B) Cook Inlet:.		
Water-based drilling fluids, drill cuttings, and dewatering effluent.	SPP Toxicity	Minimum 96-hour LC_{50} of the SPP Toxicity Test [4] shall be 3% by volume.
	Free oil	No discharge.[2]
	Diesel oil	No discharge.
	Mercury	1 mg/kg dry weight maximum in the stock barite.
	Cadmium	3 mg/kg dry weight maximum in the stock barite.
Non-aqueous drilling fluids and dewatering effluent.		No discharge.
Drill cuttings associated with non-aqueous drilling fluids.		No discharge.[5]
Well Treatment, Workover and Completion Fluids:		
(A) All coastal areas except Cook Inlet		No discharge.
(B) Cook Inlet	Oil & Grease	The maximum for any one day shall not exceed 42 mg/l, and the 30-day average shall not exceed 29 mg/l.
Produced Sand		No discharge.
Deck Drainage	Free Oil [3]	No discharge.
Sanitary Waste		
Sanitary M10	Residual Chlorine	Minimum of 1 mg/l and maintained as close to this concentration as possible.
Sanitary M9IM	Floating Solids	No discharge.
Domestic Waste	Floating Solids, Garbage and Foam.	No discharge of floating solids or garbage or foam.

[1] NSPS limitations for dewatering effluent are applicable prospectively. NSPS limitations in this rule are not applicable to discharges of dewatering effluent from reserve pits which as of the effective date of this rule no longer receive drilling fluids and drill cuttings. Limitations on such discharges shall be determined by the NPDES permit issuing authority.
[2] As determined by the static sheen test (see appendix 1 to 40 CFR Part 435, subpart A).
[3] As determined by the presence of a film or sheen upon or a discoloration of the surface of the receiving water (visual sheen).
[4] As determined by the suspended particulate phase (SPP) toxicity test (*see* Appendix 2 of subpart A of this part).
[5] When Cook Inlet operators cannot comply with this no discharge requirement due to technical limitations (*see* Appendix 1 of subpart D of this part), Cook Inlet operators shall meet the same stock limitations (C_{16}–C_{18} internal olefin) and discharge limitations for drill cuttings associated with non-aqueous drilling fluids for operators in Offshore waters (*see* § 435.15) in order to discharge drill cuttings associated with non-aqueous drilling fluids.

[61 FR 66125, Dec. 16, 1996; 62 FR 1682, Jan. 13, 1997, as amended at 66 FR 6918, Jan. 22, 2001]

§ 435.46 Pretreatment standards of performance for existing sources (PSES).

Except as provided in 40 CFR 403.7 and 403.13, any existing source with discharges subject to this subpart that introduces pollutants into a publicly owned treatment works must comply with 40 CFR part 403 and achieve the following pretreatment standards for existing sources (PSES).

PSES EFFLUENT LIMITATIONS

Stream	Pollutant parameter	PSES effluent limitations
Produced Water		No discharge.

PSES EFFLUENT LIMITATIONS—Continued

Stream	Pollutant parameter	PSES effluent limitations
Drilling Fluids and Drill Cuttings Well Treatment.		
Workover and Completion Fluids.		No discharge.
Produced Sand		No discharge.
Deck Drainage		No discharge.

§ 435.47 Pretreatment standards of performance for new sources (PSNS).

Except as provided in 40 CFR 403.7 and 403.13, any new source with discharges subject to this subpart that introduces pollutants into a publicly

owned treatment works must comply with 40 CFR part 403 and achieve the following pretreatment standards for new sources (PSNS).

PSNS EFFLUENT LIMITATIONS

Stream	Pollutant parameter	PSNS effluent limitations
Produced Water (all facilities).	.....	No discharge.
Drilling fluids and Drill Cuttings.	.....	No discharge.
Well Treatment, Workover and Completion Fluids.	.....	No discharge.
Produced Sand	.....	No discharge.
Deck Drainage	.....	No discharge.

APPENDIX 1 TO SUBPART D OF PART 435—PROCEDURE FOR DETERMINING WHEN COASTAL COOK INLET OPERATORS QUALIFY FOR AN EXEMPTION FROM THE ZERO DISCHARGE REQUIREMENT FOR EMO-CUTTINGS AND SBF-CUTTINGS IN COASTAL COOK INLET, ALASKA

1.0 SCOPE AND APPLICATION

This appendix is to be used to determine whether a Cook Inlet, Alaska, operator in Coastal waters (Coastal Cook Inlet operator) qualifies for the exemption to the zero discharge requirement established by 40 CFR 435.43 and 435.45 for drill cuttings associated with the following non-aqueous drilling fluids: enhanced mineral oil based drilling fluids (EMO-cuttings) and synthetic-based drilling fluids (SBF-cuttings). Coastal Cook Inlet operators are prohibited from discharging oil-based drilling fluids. This appendix is intended to define those situations under which technical limitations preclude Coastal Cook Inlet operators from complying with the zero discharge requirement for EMO-cuttings and SBF-cuttings. Coastal Cook Inlet operators that qualify for this exemption may be authorized to discharge EMO-cuttings and SBF-cuttings subject to the limitations applicable to operators in Offshore waters (*see* subpart A of this part).

2.0 METHOD

2.1 Any Coastal Cook Inlet operator must achieve the zero discharge limit for EMO-cuttings and SBF-cuttings unless it successfully demonstrates that technical limitations prevent it from being able to dispose of its EMO-cuttings or SBF-cuttings through on-site annular disposal, injection into a Class II underground injection control (UIC) well, or onshore land application.

2.2 To successfully demonstrate that technical limitations prevent it from being able to dispose of its EMO-cuttings or SBF-cuttings through on-site annular disposal, a Coastal Cook Inlet operator must show that it has been unable to establish formation injection in nearby wells that were initially considered for annular or dedicated disposal of EMO-cuttings or SBF-cuttings or prove to the satisfaction of the Alaska Oil and Gas Conservation Commission (AOGCC) that the EMO-cuttings or SBF-cuttings will be confined to the formation disposal interval. This demonstration must include:

a. Documentation, including engineering analysis, that shows (1) an inability to establish formation injection (e.g., formation is too tight), (2) an inability to confine EMO-cuttings or SBF-cuttings in disposal formation (e.g., no confining zone or adequate barrier to confine wastes in formation), or (3) the occurrence of high risk emergency (e.g., mechanical failure of well, loss of ability to inject that risks loss of well which would cause significant economic harm or create a substantial risk to safety); and

b. A risk analysis of alternative disposal options, including environmental assessment, human health and safety, and economic impact, that shows discharge as the lowest risk option.

2.3 To successfully demonstrate that technical limitations prevent it from being able to dispose of its EMO-cuttings or SBF-cuttings through injection into a Class II UIC well, a Coastal Cook Inlet operator must show that it has been unable to establish injection into a Class II UIC well or prove to the satisfaction of the Alaska Oil and Gas Conservation Commission (AOGCC) that the EMO-cuttings or SBF-cuttings will be confined to the formation disposal interval. This demonstration must include:

a. Documentation, including engineering analysis, that shows the inability to confine EMO-cuttings or SBF-cuttings in a Class II UIC well (e.g., no confining zone or adequate barrier to confine wastes in formation);

b. Documentation demonstrating that no Class II UIC well is accessible (e.g., operator does not own, competitor will not allow injection); and

c. A risk analysis of alternative disposal option, including environmental assessment, human health and safety, and economic impact, that shows discharge as the lowest risk option.

2.4 To successfully demonstrate that technical limitations prevent it from being able to dispose of its EMO-cuttings or SBF-cuttings through land application, a Coastal Cook Inlet operator must show that it has been unable to handle drilling waste or dispose of EMO-cuttings or SBF-cuttings at an appropriate land disposal site. This demonstration must include:

a. Documentation of site restrictions that preclude land application (e.g., no land disposal sites available);

b. Documentation of the platform's lack of capacity for adequate storage of EMO-cuttings or SBF-cuttings (e.g., limited storage or room for cuttings transfer); or

c. Documentation of inability to transfer EMO-cuttings or SBF-cuttings from platform to land for disposal (e.g., extremely low tides, high wave action).

3.0 PROCEDURE

3.1 Except as described in Section 3.2 of this appendix, a Coastal Cook Inlet operator believing that it qualifies for the exemption to the zero discharge requirement for EMO-cuttings or SBF-cuttings must apply for and obtain an individual NPDES permit prior to discharging EMO-cuttings or SBF-cuttings to waters of the United States.

3.2 Discharges occurring as the result a high risk emergency (e.g., mechanical failure of well, loss of ability to inject that risks loss of well which would cause significant economic harm or safety) may be authorized by a general NPDES permit provided that:

a. The Coastal Cook Inlet operator satisfactorily demonstrates to EPA Region 10 the fulfillment of the other exemption requirements described in Section 2.0 of this appendix, or

b. The general permit allows for high risk emergency discharges and provides Reporting Requirements to EPA Region 10 immediately upon commencing discharge.

[66 FR 6918, Jan. 22, 2001]

Subpart E—Agricultural and Wildlife Water Use Subcategory

§ 435.50 Applicability; description of the beneficial use subcategory.

The provisions of this subpart are applicable to those onshore facilities located in the continental United States and west of the 98th meridian for which the produced water has a use in agriculture or wildlife propagation when discharged into navigable waters. These facilities are engaged in the production, drilling, well completion, and well treatment in the oil and gas extraction industry.

§ 435.51 Specialized definitions.

For the purpose of this subpart:

(a) Except as provided below, the general definitions, abbreviations, and methods of analysis set forth in 40 CFR part 401 shall apply to this subpart.

(b) The term ''onshore'' shall mean all land areas landward of the territorial seas as defined in 40 CFR 125.1(gg).

(c) The term ''use in agricultural or wildlife propagation'' means that the produced water is of good enough quality to be used for wildlife or livestock watering or other agricultural uses and that the produced water is actually put to such use during periods of discharge.

§ 435.52 Effluent limitations guidelines representing the degree of effluent reduction attainable by the application of the best practicable control technology currently available.

Except as provided in §§ 125.30 through 125.32, any existing point source subject to this subpart shall achieve the following effluent limitations representing the degree of effluent reduction attainable by the application of the best practicable control technology currently available (BPT):

(a) There shall be no discharge of waste pollutants into navigable waters from any source (other than produced water) associated with production, field exploration, drilling, well completion, or well treatment (i.e., drilling muds, drill cuttings, and produced sands).

(b) Produced water discharges shall not exceed the following daily maximum limitation:

Effluent characteristics:	Effluent limitation (mg/l).
Oil and Grease:	35.

[44 FR 22075, Apr. 13, 1979, as amended at 60 FR 33967, June 29, 1995]

Subpart F—Stripper Subcategory

§ 435.60 Applicability; description of the stripper subcategory.

The provisions of this subpart are applicable to those onshore facilities which produce 10 barrels per well per calendar day or less of crude oil and which are operating at the maximum feasible rate of production and in accordance with recognized conservation practices. These facilities are engaged in production, and well treatment in the oil and gas extraction industry.

§ 435.61 Specialized definitions.

For the purpose of this subpart:

(a) Except as provided below, the general definitions, abbreviations, and

methods of analysis set forth in 40 CFR part 401 shall apply to this subpart.

(b) The term ''onshore'' shall mean all land areas landward of the inner boundary of the territorial seas as defined in 40 CFR 125.1(gg).

(c) The term ''well'' shall means crude oil producing wells and shall not include gas wells or wells injecting water for disposal or for enchanced recovery of oil or gas.

(d) The term ''gas well'' shall mean any well which produces natural gas in a ratio to the petroleum liquids produced greater than 15,000 cubic feet of gas per 1 barrel (42 gallons) of petroleum liquids.

Subpart G—General Provisions

§ 435.70 Applicability.

(a) *Purpose*. This subpart is intended to prevent oil and gas facilities, for which effluent limitations guidelines and standards, new source performance standards, or pretreatment standards have been promulgated under this part, from circumventing the effluent limitations guidelines and standards applicable to those facilities by moving effluent produced in one subcategory to another subcategory for disposal under less stringent requirements than intended by this part.

(b) *Applicability*. The effluent limitations and standards applicable to an oil and gas facility shall be determined as follows:

(1) An Oil and Gas facility, operator, or its agent or contractor may move its wastewaters from a facility located in one subcategory to another subcategory for treatment and return it to a location covered by the original subcategory for disposal. In such case, the effluent limitations guidelines, new source performance standards, or pretreatment standards for the original subcategory apply.

(2) An Oil and Gas facility, operator, or its agent or contractor may move its wastewaters from a facility located in one subcategory to another subcategory for disposal or treatment and disposal, provided:

(i) If an Oil and Gas facility, operator or its agent or contractor moves wastewaters from a wellhead located in one subcategory to another subcategory where oil and gas facilities are governed by less stringent effluent limitations guidelines, new source performance standards, or pretreatment standards, the more stringent effluent limitations guidelines, new source performance standards, or pretreatment standards applicable to the subcategory where the wellhead is located shall apply.

(ii) If an Oil and Gas facility, operator or its agent moves effluent from a wellhead located in one subcategory to another subcategory where oil and gas facilities are governed by more stringent effluent limitations guidelines, new source performance standards, or pretreatment standards, the more stringent effluent limitations guidelines, new source performance standards, or pretreatment standards applicable at the point of discharge shall apply.

[61 FR 66129, Dec. 16, 1996]

PART 436—MINERAL MINING AND PROCESSING POINT SOURCE CATEGORY

Subpart A—Dimension Stone Subcategory [Reserved]

Subpart B—Crushed Stone Subcategory

Sec.
436.20 Applicability; description of the crushed stone subcategory.
436.21 Specialized definitions.
436.22 Effluent limitations guidelines representing the degree of effluent reduction attainable by the application of the best practicable control technology currently available.

Subpart C—Construction Sand and Gravel Subcategory

436.30 Applicability; description of the construction sand and gravel subcategory.
436.31 Specialized definitions.
436.32 Effluent limitations guidelines representing the degree of effluent reduction attainable by the application of the best practicable control technology currently available.

Subpart D—Industrial Sand Subcategory

436.40 Applicability; description of the industrial sand subcategory.
436.41 Specialized definitions.
436.42 Effluent limitations guidelines representing the degree of effluent reduction

attainable by the application of the best practicable control technology currently available.

Subpart E—Gypsum Subcategory

436.50 Applicability; description of the gypsum subcategory.
436.51 Specialized definitions.
436.52 Effluent limitations guidelines representing the degree of effluent reduction attainable by the application of the best practicable control technology currently available.

Subpart F—Asphaltic Mineral Subcategory

436.60 Applicability; description of the asphaltic mineral subcategory.
436.61 Specialized definitions.
436.62 Effluent limitations guidelines representing the degree of effluent reduction attainable by the application of the best practicable control technology currently available.

Subpart G—Asbestos and Wollastonite Subcategory

436.70 Applicability; description of the asbestos and wollastonite subcategory.
436.71 Specialized definitions.
436.72 Effluent limitations guidelines representing the degree of effluent reduction attainable by the application of the best practicable control technology currently available.

Subpart H—Lightweight Aggregates Subcategory [Reserved]

Subpart I—Mica and Sericite Subcategory [Reserved]

Subpart J—Barite Subcategory

436.100 Applicability; description of the barite subcategory.
436.101 Specialized definitions.
436.102 Effluent limitations guidelines representing the degree of effluent reduction attainable by the application of the best practicable control technology currently available.

Subpart K—Fluorspar Subcategory

436.110 Applicability; description of the fluorspar subcategory.
436.111 Specialized definitions.
436.112 Effluent limitations guidelines representing the degree of effluent reduction attainable by the application of the best practicable control technology currently available.

Subpart L—Salines From Brine Lakes Subcategory

436.120 Applicability; description of the salines from brine lakes subcategory.
436.121 Specialized definitions.
436.122 Effluent limitations guidelines representing the degree of effluent reduction attainable by the application of the best practicable control technology currently available.

Subpart M—Borax Subcategory

436.130 Applicability; description of the borax subcategory.
436.131 Specialized definitions.
436.132 Effluent limitations guidelines representing the degree of effluent reduction attainable by the application of the best practicable control technology currently available.

Subpart N—Potash Subcategory

436.140 Applicability; description of the potash subcategory.
436.141 Specialized definitions.
436.142 Effluent limitations guidelines representing the degree of effluent reduction attainable by the application of the best praticable control technology currently available.

Subpart O—Sodium Sulfate Subcategory

436.150 Applicability; description of the sodium sulfate subcategory.
436.151 Specialized definitions.
436.152 Effluent limitations guidelines representing the degree of effluent reduction attainable by the application of the best practicable control technology currently available.

Subpart P—Trona Subcategory [Reserved]

Subpart Q—Rock Salt Subcategory [Reserved]

Subpart R—Phosphate Rock Subcategory

436.180 Applicability; description of the phosphate rock subcategory.
436.181 Specialized definitions.
436.182 Effluent limitations guidelines representing the degree of effluent reduction attainable by the application of the best practicable control technology currently available.
436.183–436.184 [Reserved]
436.185 Standards of performance for new sources.

Subpart S—Frasch Sulfur Subcategory

436.190 Applicability; description of the Frasch sulfur subcategory.

436.191 Specialized definitions.
436.192 Effluent limitations guidelines representing the degree of effluent reduction attainable by the application of the best practicable control technology currently available.

Subpart T—Mineral Pigments Subcategory [Reserved]

Subpart U—Lithium Subcategory [Reserved]

Subpart V—Bentonite Subcategory

436.220 Applicability; description of the bentonite subcategory.
436.221 Specialized definitions.
436.222 Effluent limitations guidelines representing the degree of effluent reduction attainable by the application of the best practicable control technology currently available.

Subpart W—Magnesite Subcategory

436.230 Applicability; description of the magnesite subcategory.
436.231 Specialized definitions.
436.232 Effluent limitations guidelines representing the degree of effluent reduction attainable by the application of the best practicable control technology currently available.

Subpart X—Diatomite Subcategory

436.240 Applicability; description of the diatomite subcategory.
436.241 Specialized definitions.
436.242 Effluent limitations guidelines representing the degree of effluent reduction attainable by the application of the best practicable control technology currently available.

Subpart Y—Jade Subcategory

436.250 Applicability; description of the jade subcategory.
436.251 Specialized definitions.
436.252 Effluent limitations guidelines representing the degree of effluent reduction attainable by the application of the best practicable control technology currently available.

Subpart Z—Novaculite Subcategory

436.260 Applicability; description of the novaculite subcategory.
436.261 Specialized definitions.
436.262 Effluent limitations guidelines representing the degree of effluent reduction attainable by the application of the best practicable control technology currently available.

Subpart AA—Fire Clay Subcategory [Reserved]

Subpart AB—Attapulgite and Montmorillonite Subcategory [Reserved]

Subpart AC—Kyanite Subcategory [Reserved]

Subpart AD—Shale and Common Clay Subcategory [Reserved]

Subpart AE—Aplite Subcategory [Reserved]

Subpart AF—Tripoli Subcategory

436.310 Applicability; description of the tripoli subcategory.
436.321 Specialized definitions.
436.322 Effluent limitations guidelines representing the degree of effluent reduction attainable by the application of the best practicable control technology currently available.

Subpart AG—Kaolin Subcategory [Reserved]

Subpart AH—Ball Clay Subcategory [Reserved]

Subpart AI—Feldspar Subcategory [Reserved]

Subpart AJ—Talc, Steatite, Soapstone and Pyrophyllite Subcategory [Reserved]

Subpart AK—Garnet Subcategory [Reserved]

Subpart AL—Graphite Subcategory

436.380 Applicability; description of the graphite subcategory.
436.381 Specialized definitions.
436.382 Effluent limitations guidelines representing the degree of effluent reduction attainable by the application of the best practicable control technology currently available.

AUTHORITY: Secs. 301, 304 (b) and (c), Federal Water Pollution Control Act, as amended (33 U.S.C. 1251, 1311, 1314 (b) and (c), 86 Stat. 816 *et seq.*, Pub. L. 92–500) (the Act).

SOURCE: 40 FR 48657, Oct. 16, 1975, unless otherwise noted.

Subpart A—Dimension Stone Subcategory [Reserved]

Subpart B—Crushed Stone Subcategory

SOURCE: 42 FR 35849, July 12, 1977, unless otherwise noted.

§ 436.20 Applicability; description of the crushed stone subcategory.

The provisions of this subpart are applicable to the mining or quarrying and the processing of crushed and broken stone and riprap. This subpart includes all types of rock and stone. Rock and stone that is crushed or broken prior to the extraction of a mineral are elsewhere covered. The processing of calcite, however, in conjunction with the processing of crushed and broken limestone or dolomite is included in this subpart.

§ 436.21 Specialized definitions.

For the purpose of this subpart:

(a) Except as provided below, the general definitions, abbreviations and methods of analysis set forth in part 401 of this chapter shall apply to this subpart.

(b) The term ''mine dewatering'' shall mean any water that is impounded or that collects in the mine and is pumped, drained or otherwise removed from the mine through the efforts of the mine operator. However, if a mine is also used for treatment of process generated waste water, discharges of commingled water from the facilities shall be deemed discharges of process generated waste water.

(c) The term ''10-year 24-hour precipitation event'' shall mean the maximum 24-hour precipitation event with a probable reoccurrence interval of once in 10 years. This information is available in ''Weather Bureau Technical Paper No. 40,'' May 1961 and ''NOAA Atlas 2,'' 1973 for the 11 Western States, and may be obtained from the National Climatic Center of the Environmental Data Service, National Oceanic and Atmospheric Administration, U.S. Department of Commerce.

(d) The term ''mine'' shall mean an area of land, surface or underground, actively mined for the production of crushed and broken stone from natural deposits.

(e) The term ''process generated waste water'' shall mean any waste water used in the slurry transport of mined material, air emissions control, or processing exclusive of mining. The term shall also include any other water which becomes commingled with such waste water in a pit, pond, lagoon, mine, or other facility used for treatment of such waste water.

§ 436.22 Effluent limitations guidelines representing the degree of effluent reduction attainable by the application of the best practicable control technology currently available.

(a) Except as provided in §§ 125.30 through 125.32, and subject to the provisions of paragraphs (b) and (c) of this section, any existing point source subject to this subpart shall achieve the following effluent limitations representing the degree of effluent reduction attainable by the application of the best practicable control technology currently available (BPT):

(1) Discharges of process generated waste water pollutants from facilities that recycle waste water for use in processing shall not exceed the following limitations:

Effluent characteristic	Effluent limitations	
	Maximum for any 1 day	Average of daily values for 30 consecutive days shall not exceed—
pH	(1)	(1)

[1] Within the range 6.0 to 9.0.

(2) Mine dewatering discharges shall not exceed the following limitations:

Effluent characteristic	Effluent limitations	
	Maximum for any 1 day	Average of daily values for 30 consecutive days shall not exceed—
pH	(1)	(1)

[1] Within the range 6.0 to 9.0.

(b) Any overflow from facilities governed by this subpart shall not be subject to the limitations of paragraph (a) of this section if the facilities are designed, constructed and maintained to contain or treat the volume of waste water which would result from a 10-year 24-hour precipitation event.

(c) In the case of a discharge into receiving waters for which the pH, if unaltered by man's activities, is or

would be less than 6.0 and water quality criteria in water quality standards approved under the Act authorize such lower pH, the pH limitations for such discharge may be adjusted downward to the pH water quality criterion for the receiving waters. In no case shall a pH limitation outside the range 5.0 to 9.0 be permitted.

[42 FR 35849, July 12, 1977, as amended at 44 FR 76793, Dec. 28, 1979; 60 FR 33967, June 29, 1995; 60 FR 35796, July 11, 1995]

Subpart C—Construction Sand and Gravel Subcategory

SOURCE: 42 FR 35850, July 12, 1977, unless otherwise noted.

§ 436.30 Applicability; description of the construction sand and gravel subcategory.

The provisions of this subpart are applicable to the mining and the processing of sand and gravel for construction or fill uses, except that on-board processing of dredged sand and gravel which is subject to the provisions of 33 CFR part 230 of this chapter will not be governed by the provisions of this subpart.

§ 436.31 Specialized definitions.

For the purpose of this subpart:

(a) Except as provided below, the general definitions, abbreviations and methods of analysis set forth in part 401 of this chapter shall apply to this subpart.

(b) The term ''mine dewatering'' shall mean any water that is impounded or that collects in the mine and is pumped, drained or otherwise removed from the mine through the efforts of the mine operator. This term shall also include wet pit overflows caused solely by direct rainfall and ground water seepage. However, if a mine is also used for treatment of process generated waste water, discharges of commingled water from the mine shall be deemed discharges of process generated waste water.

(c) The term ''10-year 24-hour precipitation event'' shall mean the maximum 24 hour precipitation event with a probable reoccurrence interval of once in 10 years. This information is available in ''Weather Bureau Technical Paper No. 40,'' May 1961 and ''NOAA Atlas 2,'' 1973 for the 11 Western States, and may be obtained from the National Climatic Center of the Environmental Data Service, National Oceanic and Atmospheric Administration, U.S. Department of Commerce.

(d) The term ''mine'' shall mean an area of land, surface or underground, actively mined for the production of sand and gravel from natural deposits.

(e) The term ''process generated waste water'' shall mean any waste water used in the slurry transport of mined material, air emissions control, or processing exclusive of mining. The term shall also include any other water which becomes commingled with such waste water in a pit, pond, lagoon, mine or other facility used for treatment of such waste water. The term does not include waste water used for the suction dredging of deposits in a body of water and returned directly to the body of waste without being used for other purposes or combined with other waste water.

§ 436.32 Effluent limitations guidelines representing the degree of effluent reduction attainable by the application of the best practicable control technology currently available.

(a) Except as provided in §§ 125.30 through 125.32, and subject to the provisions of paragraphs (b) and (c) of this section, any existing point source subject to this subpart shall achieve the following effluent limitations representing the degree of effluent reduction attainable by the application of the best practicable control technology currently available (BPT):

(1) Discharges of process generated waste water pollutants from facilities that recycle waste water for use in processing shall not exceed the following limitations:

Effluent characteristic	Effluent limitations	
	Maximum for any 1 day	Average of daily values for 30 consecutive days shall not exceed—
pH	(1)	(1)

[1] Within the range 6.0 to 9.0.

(2) Mine dewatering discharges shall not exceed the following limitations:

Effluent characteristic	Effluent limitations	
	Maximum for any 1 day	Average of daily values for 30 consecutive days shall not exceed—
pH	(1)	(1)

[1] Within the range 6.0 to 9.0.

(b) Any overflow from facilities governed by this subpart shall not be subject to the limitations of paragraph (a) of this section if the facilities are designed, constructed and maintained to contain or treat the volume of waste water which would result from a 10-year 24-hour precipitation event.

(c) In the case of a discharge into receiving waters for which the pH, if unaltered by man's activities, is or would be less than 6.0 and water quality criteria in water quality standards approved under the Act authorize such lower pH, the pH limitation for such discharge may be adjusted downward to the pH water quality criterion for the receiving waters. In no case shall a pH limitation outside the range 5.0 to 9.0 be permitted.

[42 FR 35850, July 12, 1977, as amended at 44 FR 76793, Dec. 28, 1979; 60 FR 33967, June 29, 1995; 60 FR 35796, July 11, 1995]

Subpart D—Industrial Sand Subcategory

SOURCE: 42 FR 35851, July 12, 1977, unless otherwise noted.

§ 436.40 Applicability; description of the industrial sand subcategory.

The provisions of this subpart are applicable to the mining and the processing of sand and gravel for uses other than construction and fill. These uses include, but are not limited to glass-making, molding, abrasives, filtration, refractories, and refractory bonding.

§ 436.41 Specialized definitions.

For the purpose of this subpart:

(a) Except as provided below, the general definitions, abbreviations, and methods of analysis set forth in part 401 of this chapter shall apply to this subpart.

(b) The term ''mine dewatering'' shall mean any water that is impounded or that collects in the mine and is pumped, drained, or otherwise removed from the mine through the efforts of the mine operator. This term shall also include wet pit overflows caused solely by direct rainfall and ground water seepage. However, if a mine is also used for the treatment of process generated waste water, discharges of commingled water from the mine shall be deemed discharges of process generated waste water.

(c) The term ''10-year 24-hour precipitation event'' shall mean the maximum 24 hour precipitation event with a probable reoccurrence interval of once in 10 years. This information is available in ''Weather Bureau Technical Paper No. 40,'' May 1961 and ''NOAA Atlas 2,'' 1973 for the 11 Western States, and may be obtained from the National Climatic Center of the Environmental Data Service, National Oceanic and Atmospheric Administration, U.S. Department of Commerce.

(d) The term ''mine'' shall mean an area of land actively mined for the production of sand and gravel from natural deposits.

(e) The term ''process generated waste water'' shall mean any waste water used in the slurry transport of mined material, air emissions control, or processing exclusive of mining. The term shall also include any other water which becomes commingled with such waste water in a pit, pond, lagoon, mine or other facility used for treatment of such waste water. The terms does not include waste water used for the suction dredging of deposits in a body of water and returned directly to the body of water without being used for other purposes or combined with other waste water.

§ 436.42 Effluent limitations guidelines representing the degree of effluent reduction attainable by the application of the best practicable control technology currently available.

(a) Except as provided in §§ 125.30 through 125.32, and subject to the provisions of paragraphs (b) and (c) of this section, any existing point source subject to this subpart shall achieve the following effluent limitations representing the degree of effluent reduction attainable by the application of the best practicable control technology currently available (BPT):

(1) With the exception of operation using HF flotation, discharges of process waste water pollutants from facilities that recycle waste water, for use in the processing shall not exceed the following limitations:

Effluent characteristic	Effluent limitations	
	Maximum for any 1 day	Average of daily values for 30 consecutive days shall not exceed—
TSS	45 mg/l	25 mg/l.
pH	(1)	(1)

[1] Within the range 6.0 to 9.0.

(2) Except as provided in paragraphs (a) (1) and (3) of this section, there shall be no discharge of process generated waste water pollutants into navigable waters.

(3) Process generated waste water from facilities employing HF flotation shall not exceed the following limitations:

[Metric units, kg/kkg of total product; English units, lb/1,000 lb of total product]

Effluent characteristic	Effluent limitations	
	Maximum for any 1 day	Average of daily values for 30 consecutive days shall not exceed—
TSS	0.046	0.023
Total fluoride	.006	.003
pH	(1)	(1)

[1] Within the range 6.0 to 9.0.

(4) Mine dewatering discharges shall not exceed the following limitations:

Effluent characteristic	Effluent limitations	
	Maximum for any 1 day	Average of daily values for 30 consecutive days shall not exceed—
TSS	45 mg/l	25 mg/l.
pH	(1)	(1)

[1] Within the range 6.0 to 9.0.

(b) Any overflow from facilities governed by this subpart shall not be subject to the limitations of paragraph (a) of this section if the facilities are designed, constructed and maintained to contain or treat the volume of waste water which would result from a 10-year 24-hour precipitation event.

(c) In the case of a discharge into receiving waters for which the pH, if unaltered by man's activities, is or would be less than 6.0 and water quality criteria in water quality standards approved under the Act authorize such lower pH, the pH limitation for such discharge may be adjusted downward to the pH water quality criterion for the receiving waters. In no case shall a pH limitation outside the range 5.0 to 9.0 be permitted.

[42 FR 35851, July 12, 1977, as amended at 60 FR 33967, June 29, 1995; 60 FR 35796, July 11, 1995]

Subpart E—Gypsum Subcategory

§ 436.50 Applicability; description of the gypsum subcategory.

The provisions of this subpart are applicable to the processing of gypsum.

§ 436.51 Specialized definitions.

For the purpose of this subpart:

(a) Except as provided below, the general definitions, abbreviations and methods of analysis set forth in part 401 of this chapter shall apply to this subpart.

§ 436.52 Effluent limitations guidelines representing the degree of effluent reduction attainable by the application of the best practicable control technology currently available.

Except as provided in §§ 125.30 through 125.32, any existing point source subject to this subpart shall achieve the following effluent limitations representing the degree of effluent reduction attainable by the application of the best practicable control technology currently available (BPT):

(a) For operations not employing wet air emissions control scrubbers there shall be no discharge of process generated waste water pollutants into navigable waters.

(b) Only that volume of water resulting from precipitation that exceeds the maximum safe surge capacity of a process waste water impoundment may be discharged from that impoundment. The height difference between the maximum safe surge capacity level and the normal operating level must be greater than the inches of rain representing the 10-year, 24-hour rainfall event as established by the National Climatic

Center, National Oceanic and Atmospheric Administration for the locality in which such impoundment is located.

[40 FR 48657, Oct. 16, 1975, as amended at 60 FR 33967, June 29, 1995]

Subpart F—Asphaltic Mineral Subcategory

§ 436.60 Applicability; description of the asphaltic mineral subcategory.

The provisions of this subpart are applicable to the processing of bituminous limestone, oil-impregnated diatomite and oilsonite not primarily as an energy source.

§ 436.61 Specialized definitions.

For the purpose of this subpart:

(a) Except as provided below, the general definitions, abbreviations and methods of analysis set forth in part 401 of this chapter shall apply to this subpart.

§ 436.62 Effluent limitations guidelines representing the degree of effluent reduction attainable by the application of the best practicable control technology currently available.

Except as provided in §§ 125.30 through 125.32, any existing point source subject to this subpart shall achieve the following effluent limitations representing the degree of effluent reduction attainable by the application of the best practicable control technology currently available (BPT):

(a) Subject to the provisions of the following paragraphs of this section, there shall be no discharge of process generated waste water pollutants into navigable waters.

(b) Only that volume of water resulting from precipitation that exceeds the maximum safe surge capacity of a process waste water impoundment may be discharged from that impoundment. The height difference between the maximum safe surge capacity level and the normal operating level must be greater than the inches of rain representing the 10-year, 24-hour rainfall event as established by the National Climatic Center, National Oceanic and Atmospheric Administration for the locality in which such impoundment is located.

[40 FR 48657, Oct. 16, 1975, as amended at 60 FR 33967, June 29, 1995]

Subpart G—Asbestos and Wollastonite Subcategory

§ 436.70 Applicability; description of the asbestos and wollastonite subcategory.

The provisions of this subpart are applicable to the processing of asbestos and wollastonite.

§ 436.71 Specialized definitions.

For the purpose of this subpart:

(a) Except as provided below, the general definitions, abbreviations and methods of analysis set forth in part 401 of this chapter shall apply to this subpart.

§ 436.72 Effluent limitations guidelines representing the degree of effluent reduction attainable by the application of the best practicable control technology currently available.

Except as provided in §§ 125.30 through 125.32, any existing point source subject to this subpart shall achieve the following effluent limitations representing the degree of effluent reduction attainable by the application of the best practicable control technology currently available (BPT):

(a) Subject to the provisions of the following paragraphs of this section, there shall be no discharge of process generated waste water pollutants into navigable waters.

(b) Only that volume of water resulting from precipitation that exceeds the maximum safe surge capacity of a process waste water impoundment may be discharged from that impoundment. The height difference between the maximum safe surge capacity level and the normal operating level must be greater than the inches of rain representing the 10-year, 24-hour rainfall event as established by the National Climatic

Center, National Oceanic and Atmospheric Administration for the locality in which such impoundment is located.

[40 FR 48657, Oct. 16, 1975, as amended at 60 FR 33967, June 29, 1995]

Subpart H—Lightweight Aggregates Subcategory [Reserved]

Subpart I—Mica and Sericite Subcategory [Reserved]

Subpart J—Barite Subcategory

§ 436.100 Applicability; description of the barite subcategory.

The provisions of this subpart are applicable to the processing of barite.

§ 436.101 Specialized definitions.

For the purpose of this subpart:

(a) Except as provided below, the general definitions, abbreviations and methods of analysis set forth in part 401 of this chapter shall apply to this subpart.

§ 436.102 Effluent limitations guidelines representing the degree of effluent reduction attainable by the application of the best practicable control technology currently available.

Except as provided in §§ 125.30 through 125.32, any existing point source subject to this subpart shall achieve the following effluent limitations representing the degree of effluent reduction attainable by the application of the best practicable control technology currently available (BPT): For operations not employing wet processes or flotation processes there shall be no discharge of process generated waste water pollutants into navigable waters.

[60 FR 33967, June 29, 1995]

Subpart K—Fluorspar Subcategory

§ 436.110 Applicability; description of the fluorspar subcategory.

The provisions of this subpart are applicable to the processing of fluorspar.

§ 436.111 Specialized definitions.

For the purpose of this subpart:

(a) Except as provided below, the general definitions, abbreviations and methods of analysis set forth in part 401 of this chapter shall apply to this subpart.

§ 436.112 Effluent limitations guidelines representing the degree of effluent reduction attainable by the application of the best practicable control technology currently available.

Except as provided in §§ 125.30 through 125.32, any existing point source subject to this subpart shall achieve the following effluent limitations representing the degree of effluent reduction attainable by the application of the best practicable control technology currently available (BPT): For operations not employing heavy media separation or flotation processes there shall be no discharge of process generated waste water pollutants into navigable waters.

[60 FR 33967, June 29, 1995]

Subpart L—Salines From Brine Lakes Subcategory

§ 436.120 Applicability; description of the salines from brine lakes subcategory.

The provisions of this subpart are applicable to the processing of salines from brine lakes.

§ 436.121 Specialized definitions.

For the purpose of this subpart:

(a) Except as provided below, the general definitions, abbreviations and methods of analysis set forth in part 401 of this chapter shall apply to this subpart.

§ 436.122 Effluent limitations guidelines representing the degree of effluent reduction attainable by the application of the best practicable control technology currently available.

(a) Except as provided in §§ 125.30 through 125.32, and subject to the provisions of paragraph (b) of this section, any existing point source subject to this subpart shall achieve the following effluent limitations representing the

degree of effluent reduction attainable by the application of the best practicable control technology currently available (BPT): there shall be no discharge of process waste water pollutants into navigable waters.

(b) The limitations specified in paragraph (a) of this section shall be applied on a net basis if the discharge is in compliance with § 125.28 of this chapter ''the source of the applicant's water supply is the same body of water into which the discharge is made * * *''.

[40 FR 48657, Oct. 16, 1975, as amended at 60 FR 33968, June 29, 1995; 60 FR 35796, July 11, 1995]

Subpart M—Borax Subcategory

§ 436.130 Applicability; description of the borax subcategory.

The provisions of this subpart are applicable to the processing of borate minerals. Borax obtained from brine lakes is regulated in the salines from brine lakes subcategory (subpart L of this part).

§ 436.131 Specialized definitions.

For the purpose of this subpart:

(a) Except as provided below, the general definitions, abbreviations and methods of analysis set forth in part 401 of this chapter shall apply to this subpart.

§ 436.132 Effluent limitations guidelines representing the degree of effluent reduction attainable by the application of the best practicable control technology currently available.

(a) Except as provided in §§ 125.30 through 125.32, and subject to the provisions of paragraph (b) of this section, any existing point source subject to this subpart shall achieve the following effluent limitations representing the degree of effluent reduction attainable by the application of the best practicable control technology currently available (BPT): there shall be no discharge of process waste water pollutants into navigable waters.

(b) Only that volume of water resulting from precipitation that exceeds the maximum safe surge capacity of a process waste water impoundment may be discharged from that impoundment. The height difference between the maximum safe surge capacity level and the normal operating level must be greater than the inches of rain representing the 10-year, 24-hour rainfall event as established by the National Climatic Center, National Oceanic and Atmospheric Administration for the locality in which such impoundment is located.

[40 FR 48657, Oct. 16, 1975, as amended at 60 FR 33968, June 29, 1995; 60 FR 35796, July 11, 1995]

Subpart N—Potash Subcategory

AUTHORITY: Sec. 306, Federal Water Pollution Control Act, as amended.

§ 436.140 Applicability; description of the potash subcategory.

The provisions of this subpart are applicable to the processing of potash. Potash obtained from brine lakes is regulated in the saline from brine lakes subcategory (subpart L of this part).

§ 436.141 Specialized definitions.

For the purpose of this subpart:

(a) Except as provided below, the general definitions, abbreviations and methods of analysis set forth in part 401 of this chapter shall apply to this subpart.

§ 436.142 Effluent limitations guidelines representing the degree of effluent reduction attainable by the application of the best practicable control technology currently available.

(a) Except as provided in §§ 125.30 through 125.32, and subject to the provisions of paragraph (b) of this section, any existing point source subject to this subpart shall achieve the following effluent limitations representing the degree of effluent reduction attainable by the application of the best practicable control technology currently available (BPT): there shall be no discharge of process waste water pollutants into navigable waters.

(b) Only that volume of water resulting from precipitation that exceeds the maximum safe surge capacity of a process waste water impoundment may be discharged from that impoundment.

The height difference between the maximum safe surge capacity level and the normal operating level must be greater than the inches of rain representing the 10-year, 24-hour rainfall event as established by the National Climatic Center, National Oceanic and Atmospheric Administration for the locality in which such impoundment is located.

[40 FR 48657, Oct. 16, 1975, as amended at 60 FR 33968, June 29, 1995; 60 FR 35796, July 11, 1995]

Subpart O—Sodium Sulfate Subcategory

§ 436.150 Applicability; description of the sodium sulfate subcategory.

The provisions of this subpart are applicable to the processing of sodium sulfate. Sodium sulfate obtained from brine lakes is regulated in the salines from brine lakes subcategory (subpart L of this part).

§ 436.151 Specialized definitions.

For the purpose of this subpart:

(a) Except as provided below, the general definitions, abbreviations and methods of analysis set forth in part 401 of this chapter shall apply to this subpart.

§ 436.152 Effluent limitations guidelines representing the degree of effluent reduction attainable by the application of the best practicable control technology currently available.

(a) Except as provided in §§ 125.30 through 125.32, and subject to the provisions of paragraph (b) of this section, any existing point source subject to this subpart shall achieve the following effluent limitations representing the degree of effluent reduction attainable by the application of the best practicable control technology currently available (BPT): there shall be no discharge of process waste water pollutants into navigable waters.

(b) Only that volume of water resulting from precipitation that exceeds the maximum safe surge capacity of a process waste water impoundment may be discharged from that impoundment. The height difference between the maximum safe surge capacity level and the normal operating level must be greater than the inches of rain representing the 10-year, 24-hour rainfall event as established by the National Climatic Center, National Oceanic and Atmospheric Administration for the locality in which such impoundment is located.

[40 FR 48657, Oct. 16, 1975, as amended at 60 FR 33968, June 29, 1995; 60 FR 35796, July 11, 1995]

Subpart P—Trona Subcategory [Reserved]

Subpart Q—Rock Salt Subcategory [Reserved]

Subpart R—Phosphate Rock Subcategory

AUTHORITY: Sec. 306, Federal Water Pollution Control Act, as amended.

§ 436.180 Applicability; description of the phosphate rock subcategory.

The provisions of this subpart are applicable to the mining and the processing of phosphate bearing rock, ore or earth for the phosphate content.

[43 FR 9809, Mar. 10, 1978]

§ 436.181 Specialized definitions.

For the purpose of this subpart:

(a) Except as provided below, the general definitions, abbreviations and methods of analysis set forth in 40 CFR part 401 shall apply to this subpart.

(b) The term ''mine dewatering'' shall mean any water that is impounded or that collects in the mine and is pumped, drained or otherwise removed from the mine through the efforts of the mine operator.

(c) The term ''10-year 24-hour precipitation event'' shall mean the maximum 24 hour precipitation event with a probable reoccurrence interval of once in 10 years. This information is available in ''Weather Bureau Technical Paper No. 40,'' May 1961 and ''NOAA Atlas 2,'' 1973 for the 11 Western States, and may be obtained from the National Climatic Center of the Environmental Data Service, National Oceanic and Atmospheric Administration, U.S. Department of Commerce.

(d) The term ''mine'' shall mean an area of land, surface or underground,

actively used for or resulting from the extraction of a mineral from natural deposits.

(e) The term ''process generated waste water'' shall mean any waste water used in the slurry transport of mined material, air emissions control, or processing exclusive of mining. The term shall also include any other water which becomes commingled with such waste water in a pit, pond lagoon, mine, or other facility used for settling or treatment of such waste water.

[43 FR 9809, Mar. 10, 1978]

§ 436.182 Effluent limitations guidelines representing the degree of effluent reduction attainable by the application of the best practicable control technology currently available.

(a) Except as provided in §§ 125.30 through 125.32, and subject to the provisions of paragraph (b) of this section, any existing point source subject to this subpart shall achieve the following effluent limitations representing the degree of effluent reduction attainable by the application of the best practicable control technology currently available (BPT):

(1) Discharges of process generated waste water and mine dewatering discharges, shall not exceed the following limitations:

Effluent characteristic	Effluent limitations	
	Maximum for any 1 day	Average of daily values for 30 consecutive days shall not exceed—
TSS	60 mg/l	30 mg./l.
pH	(1)	(1)

[1] Within the range 6.0 to 9.0.

(b) Any overflow from facilities governed by this subpart shall not be subject to the limitations of paragraph (a) of this section if the facilities are designed, constructed and maintained to contain or treat the volume of waste water which would result from a 10-year 24-hour precipitation event.

[42 FR 35852, July 12, 1977, as amended at 60 FR 33968, June 29, 1995; 60 FR 35796, July 11, 1995]

§§ 436.183–436.184 [Reserved]

§ 436.185 Standards of performance for new sources.

(a) Subject to the provisions of paragraph (b) of this section, the following limitations establish the quantity or quality of pollutants or pollutant properties, controlled by this section, which may be discharged by a point source subject to the provisions of this subpart after application of the best available demonstrated control technology.

(1) Discharges of process generated waste water and mine dewatering discharges, shall not exceed the following limitations:

Effluent characteristic	Effluent limitations	
	Maximum for any 1 day	Average of daily values for 30 consecutive days shall not exceed—
TSS	60 mg/l	30 mg/l.
pH	(1)	(1)

[1] Within the range 6.0 to 9.0.

(b) Any overflow from facilities governed by this subpart shall not be subject to the limitations of paragraph (a) of this section if the facilities are designed, constructed and maintained to contain or treat the volume of waste water which would result from a 10-year 24-hour precipitation event.

[43 FR 9810, Mar. 10, 1978]

Subpart S—Frasch Sulfur Subcategory

§ 436.190 Applicability; description of the Frasch sulfur subcategory.

The provisions of this subpart are applicable to the processing of sulfur on shore and in marshes and estuaries by the Frasch process. Not covered are sulfur refining operations that are not performed at the mining and collection site.

§ 436.191 Specialized definitions.

For the purpose of this subpart:

(a) Except as provided below, the general definitions, abbreviations and methods of analysis set forth in part 401 of this chapter shall apply to this subpart.

§ 436.192 Effluent limitations guidelines representing the degree of effluent reduction attainable by the application of the best practicable control technology currently available.

(a) Except as provided in §§ 125.30 through 125.32, and subject to the provisions of paragraph (b) of this section for operations mining anhydrite deposits, any existing point source subject to this subpart shall achieve the following effluent limitations representing the degree of effluent reduction attainable by the application of the best practicable control technology currently available (BPT): there shall be no discharge of process waste water pollutants into navigable waters.

(b) Only that volume of water resulting from precipitation that exceeds the maximum safe surge capacity of a process waste water impoundment may be discharged from that impoundment. The height difference between the maximum safe surge capacity level and the normal operating level must be greater than the inches of rain representing the 10-year, 24-hour rainfall event as established by the National Climatic Center, National Oceanic and Atmospheric Administration for the locality in which such impoundment is located.

[40 FR 48657, Oct. 16, 1975, as amended at 60 FR 33968, June 29, 1995; 60 FR 35796, July 11, 1995]

Subpart T—Mineral Pigments Subcategory [Reserved]

Subpart U—Lithium Subcategory [Reserved]

Subpart V—Bentonite Subcategory

§ 436.220 Applicability; description of the bentonite subcategory.

The provisions of this subpart are applicable to the processing of bentonite.

§ 436.221 Specialized definitions.

For the purpose of this subpart:

(a) Except as provided below, the general definitions, abbreviations and methods of analysis set forth in part 401 of this chapter shall apply to this subpart.

§ 436.222 Effluent limitations guidelines representing the degree of effluent reduction attainable by the application of the best practicable control technology currently available.

Except as provided in §§ 125.30 through 125.32, any existing point source subject to this subpart shall achieve the following effluent limitations representing the degree of effluent reduction attainable by the application of the best practicable control technology currently available (BPT): There shall be no discharge of process generated waste water pollutants into navigable waters.

[60 FR 33968, June 29, 1995]

Subpart W—Magnesite Subcategory

§ 436.230 Applicability; description of the magnesite subcategory.

The provisions of this subpart are applicable to the processing of naturally occurring magnesite ore.

§ 436.231 Specialized definitions.

For the purpose of this subpart:

(a) Except as provided below, the general definitions, abbreviations and methods of analysis set forth in part 401 of this chapter shall apply to this subpart.

§ 436.232 Effluent limitations guidelines representing the degree of effluent reduction attainable by the application of the best practicable control technology currently available.

(a) Except as provided in §§ 125.30 through 125.32, and subject to the provisions of paragraph (b) of this section, any existing point source subject to this subpart shall achieve the following effluent limitations representing the degree of effluent reduction attainable by the application of the best practicable control technology currently available (BPT): There shall be no discharge of process generated waste water pollutants into navigable waters.

(b) Only that volume of water resulting from precipitation that exceeds the maximum safe surge capacity of a process waste water impoundment may be discharged from that impoundment.

The height difference between the maximum safe surge capacity level and the normal operating level must be greater than the inches of rain representing the 10-year, 24-hour rainfall event as established by the National Climatic Center, National Oceanic and Atmospheric Administration for the locality in which such impoundment is located.

[40 FR 48657, Oct. 16, 1975, as amended at 60 FR 33968, June 29, 1995; 60 FR 35796, July 11, 1995]

Subpart X—Diatomite Subcategory

§ 436.240 Applicability; description of the diatomite subcategory.

The provisions of this subpart are applicable to the processing of diatomite.

§ 436.241 Specialized definitions.

For the purpose of this subpart:

(a) Except as provided below, the general definitions, abbreviations and methods of analysis set forth in part 401 of this chapter shall apply to this subpart.

§ 436.242 Effluent limitations guidelines representing the degree of effluent reduction attainable by the application of the best practicable control technology currently available.

(a) Except as provided in §§ 125.30 through 125.32, and subject to the provisions of paragraph (b) of this section, any existing point source subject to this subpart shall achieve the following effluent limitations representing the degree of effluent reduction attainable by the application of the best practicable control technology currently available (BPT): there shall be no discharge of process generated waste water pollutants into navigable waters.

(b) Only that volume of water resulting from precipitation that exceeds the maximum safe surge capacity of a process waste water impoundment may be discharged from that impoundment. The height difference between the maximum safe surge capacity level and the normal operating level must be greater than the inches of rain representing the 10-year, 24-hour rainfall event as established by the National Climatic Center, National Oceanic and Atmospheric Administration for the locality in which such impoundment is located.

[40 FR 48657, Oct. 16, 1975, as amended at 60 FR 33968, June 29, 1995; 60 FR 35796, July 11, 1995]

Subpart Y—Jade Subcategory

§ 436.250 Applicability; description of the jade subcategory.

The provisions of this subpart are applicable to the processing of jade.

§ 436.251 Specialized definitions.

For the purpose of this subpart:

(a) Except as provided below, the general definitions, abbreviations and methods of analysis set forth in part 401 of this chapter shall apply to this subpart.

§ 436.252 Effluent limitations guidelines representing the degree of effluent reduction attainable by the application of the best practicable control technology currently available.

(a) Except as provided in §§ 125.30 through 125.32, and subject to the provisions of paragraph (b) of this section, any existing point source subject to this subpart shall achieve the following effluent limitations representing the degree of effluent reduction attainable by the application of the best practicable control technology currently available (BPT): there shall be no discharge of process generated waste water pollutants into navigable waters.

(b) Only that volume of water resulting from precipitation that exceeds the maximum safe surge capacity of a process waste water impoundment may be discharged from that impoundment. The height difference between the maximum safe surge capacity level and the normal operating level must be greater than the inches of rain representing the 10-year, 24-hour rainfall event as established by the National Climatic Center, National Oceanic and Atmospheric Administration for the locality in which such impoundment is located.

[40 FR 48657, Oct. 16, 1975, as amended at 60 FR 33969, June 29, 1995; 60 FR 35796, July 11, 1995]

Subpart Z—Novaculite Subcategory

§ 436.260 Applicability; description of the novaculite subcategory.

The provisions of this subpart are applicable to the processing of novaculite.

§ 436.261 Specialized definitions.

For the purpose of this subpart:

(a) Except as provided below, the general definitions, abbreviations and methods of analysis set forth in part 401 of this chapter shall apply to this subpart.

§ 436.262 Effluent limitations guidelines representing the degree of effluent reduction attainable by the application of the best practicable control technology currently available.

(a) Except as provided in §§ 125.30 through 125.32, and subject to the provisions of paragraph (b) of this section, any existing point source subject to this subpart shall achieve the following effluent limitations representing the degree of effluent reduction attainable by the application of the best practicable control technology currently available (BPT): There shall be no discharge of process generated waste water pollutants into navigable waters.

(b) Only that volume of water resulting from precipitation that exceeds the maximum safe surge capacity of a process waste water impoundment may be discharged from that impoundment. The height difference between the maximum safe surge capacity level and the normal operating level must be greater than the inches of rain representing the 10-year, 24-hour rainfall event as established by the National Climatic Center, National Oceanic and Atmospheric Administration for the locality in which such impoundment is located.

[40 FR 48657, Oct. 16, 1975, as amended at 60 FR 33969, June 29, 1995; 60 FR 35796, July 11, 1995]

Subpart AA—Fire Clay Subcategory [Reserved]

Subpart AB—Attapulgite and Montmorillonite Subcategory [Reserved]

Subpart AC—Kyanite Subcategory [Reserved]

Subpart AD—Shale and Common Clay Subcategory [Reserved]

Subpart AE—Aplite Subcategory [Reserved]

Subpart AF—Tripoli Subcategory

§ 436.310 Applicability; description of the tripoli subcategory.

The provisions of this subpart are applicable to the processing of tripoli.

§ 436.321 Specialized definitions.

For the purpose of this subpart:

(a) Except as provided below, the general definitions, abbreviations and methods of analysis set forth in part 401 of this chapter shall apply to this subpart.

§ 436.322 Effluent limitations guidelines representing the degree of effluent reduction attainable by the application of the best practicable control technology currently available.

Except as provided in §§ 125.30 through 125.32, any existing point source subject to this subpart shall achieve the following effluent limitations representing the degree of effluent reduction attainable by the application of the best practicable control technology currently available (BPT): For operations not employing wet processes there shall be no discharge of process generated waste water pollutants into navigable waters.

[60 FR 33969, June 29, 1995]

Subpart AG—Kaolin Subcategory [Reserved]

Subpart AH—Ball Clay Subcategory [Reserved]

Subpart AI—Feldspar Subcategory [Reserved]

Subpart AJ—Talc, Steatite, Soapstone and Pyrophyllite Subcategory [Reserved]

Subpart AK—Garnet Subcategory [Reserved]

Subpart AL—Graphite Subcategory

§ 436.380 Applicability; description of the graphite subcategory.

The provisions of this subpart are applicable to the mining and processing of naturally occurring graphite.

§ 436.381 Specialized definitions.

For the purpose of this subpart:

(a) Except as provided below, the general definitions, abbreviations and methods of analysis set forth in part 401 of this chapter shall apply to this subpart.

(b) The term ''mine drainage'' shall mean any water drained, pumped or siphoned from a mine.

§ 436.382 Effluent limitations guidelines representing the degree of effluent reduction attainable by the application of the best practicable control technology currently available.

(a) Except as provided in §§ 125.30 through 125.32, and subject to the provisions of paragraph (b) of this section, any existing point source subject to this subpart shall achieve the following effluent limitations representing the degree of effluent reduction attainable by the application of the best practicable control technology currently available (BPT):

Effluent characteristic	Effluent limitations	
	Maximum for any 1 day	Average of daily values for 30 consecutive days shall not exceed—
TSS	20 mg/l	10 mg/l.
Total Fe	2 mg/l	1 mg/l.
pH	(1)	(1)

[1] Within the range 6.0 to 9.0.

(b) Only that volume of water resulting from precipitation that exceeds the maximum safe surge capacity of a process waste water impoundment may be discharged from that impoundment. The height difference between the maximum safe surge capacity level and the normal operating level must be greater than the inches of rain representing the 10-year, 24-hour rainfall event as established by the National Climatic Center, National Oceanic and Atmospheric Administration for the locality in which such impoundment is located.

[40 FR 48657, Oct. 16, 1975, as amended at 60 FR 33969, June 29, 1995; 60 FR 35796, July 11, 1995]

PART 437—THE CENTRALIZED WASTE TREATMENT POINT SOURCE CATEGORY

Sec.
437.1 General applicability.
437.2 General definitions.
437.3 General pretreatment standards.
437.4 Monitoring requirements.

Subpart A—Metals Treatment and Recovery

437.10 Applicability.
437.11 Effluent limitations attainable by the application of the best practicable control technology currently available (BPT).
437.12 Effluent limitations attainable by the application of the best conventional pollutant control technology (BCT).
437.13 Effluent limitations attainable by the application of the best available technology economically achievable (BAT).
437.14 New source performance standards (NSPS).
437.15 Pretreatment standards for existing sources (PSES).
437.16 Pretreatment standards for new sources (PSNS).

Subpart B—Oils Treatment and Recovery

437.20 Applicability.

437.21 Effluent limitations attainable by the application of the best practicable control technology currently available (BPT).
437.22 Effluent limitations attainable by the application of the best conventional pollutant control technology (BCT).
437.23 Effluent limitations attainable by the application of the best available technology economically achievable (BAT).
437.24 New source performance standards (NSPS).
437.25 Pretreatment standards for existing sources (PSES).
437.26 Pretreatment standards for new sources (PSNS).

Subpart C—Organics Treatment and Recovery

437.30 Applicability.
437.31 Effluent limitations attainable by the application of the best practicable control technology currently available (BPT).
437.32 Effluent limitations attainable by the application of the best conventional pollutant control technology (BCT).
437.33 Effluent limitations attainable by the application of the best available technology economically achievable (BAT).
437.34 New source performance standards (NSPS).
437.35 Pretreatment standards for existing sources (PSES).
437.36 Pretreatment standards for new sources (PSNS).

Subpart D—Multiple Wastestreams

437.40 Applicability.
437.41 Special Definitions.
437.42 Effluent limitations attainable by the application of the best practicable control technology currently available (BPT).
437.43 Effluent limitations attainable by the application of the best conventional pollutant control technology (BCT).
437.44 Effluent limitations attainable by the application of the best available technology economically achievable (BAT).
437.45 New source performance standards (NSPS).
437.46 Pretreatment standards for existing sources (PSES).
437.47 Pretreatment standards for new sources (PSNS).

AUTHORITY: Secs 301, 304, 306, 307, 308, 402, and 501 of the Clean Water Act, as amended; 33 U.S.C. 1311, 1314, 1316, 1317, 1318, 1342, and 1361.

SOURCE: 65 FR 81300, Dec. 22, 2000, unless otherwise noted.

§ 437.1 General applicability.

(a) Except as provided in paragraphs (b), (c), or (d) of this section, this part applies to that portion of wastewater discharges from a centralized waste treatment (CWT) facility that results from any of the following activities:

(1) Treatment and recovery of hazardous or non-hazardous industrial metal-bearing wastes, oily wastes and organic-bearing wastes received from off-site; and

(2) The treatment of CWT wastewater.

(b) This part does not apply to the following discharges of wastewater from a CWT facility:

(1) Wastewater from the treatment of wastes that are generated on-site when the wastes generated on-site are otherwise subject to another part of subchapter N.

(2) Wastewater from the treatment of wastes that are generated off-site if the discharger: a) demonstrates that the off-site wastes are generated at a facility that is subject to the same provisions in 40 CFR subchapter N as non-CWT wastes generated at the CWT facility or b) demonstrates that the off-site wastes are of similar nature and the treatment of such wastes are compatible with the treatment of non-CWT wastes generated and treated at the CWT.

(3) Wastewater from the treatment of wastes received from off-site via conduit (*e.g.*, pipelines, channels, ditches, trenches, etc.) from the facility that generates the wastes unless the resulting wastewaters are commingled with other wastewaters subject to this provision. A facility that acts as a waste collection or consolidation center is not a facility that generates wastes.

(4) Wastewater from product stewardship activities, the treatment of sanitary wastes and wastes of domestic origin including chemical toilet wastes, septage, and restaurant wastes or thermal drying of POTW biosolids. Product stewardship activities for purposes of this provision are limited to the following activities at a manufacturing facility: acceptance for treatment or recovery of its unused products, shipping and storage containers with product residues and off-spec products.

(5) Wastewater from solids recovery operations so long as the wastes recovered are from non-industrial sources, and recovery of the wastes does not generate a wastewater or leach appreciable metal or organic chemicals or petroleum-based oil and grease into the water. Examples of solids recovery operations to which this subpart would not apply include, but are not limited to, the recycling of aluminum cans, glass and plastic bottles.

(6) Wastewater from scrap metal processing or auto salvage operations.

(7) Wastewater from transfer stations or municipal recycling centers.

(8) Wastewater from the treatment of, or recovery of material from, animal or vegetable fats/oils from grease traps or interceptors generated by facilities engaged in food service activities.

(9) Wastewater from the treatment of, or recovery of material from, off-site wastes generated by facilities engaged only in food processing.

(10) Wastewater from facilities that are subject to 40 CFR part 442. Wastewater resulting from the treatment of off-site wastewater generated in cleaning transportation equipment (or on-site wastewater generated in cleaning equipment) along with other off-site wastes (subject to this part) not generated in cleaning transportation equipment is, however, subject to this part.

(11) Wastewater resulting from solvent recovery operations if the solvent recovery operations involve the separation of solvent mixtures by distillation.

(12) Wastewater from facilities that are engaged exclusively in centralized silver recovery from used photographic or x-ray materials activities. The discharge resulting from centralized silver recovery from used photographic or x-ray materials that is treated at a CWT facility along with other off-site wastestreams (subject to this part) is subject to this part.

(13) Wastewater from facilities that accept off-site wastes only for treatability studies, research and development, or chemical or physical analysis. The wastewater resulting from treatability studies, research and development, or chemical or physical analysis that is treated at a CWT facility along with other off-site wastestreams (subject to this part) is subject to this part.

(c) This part also does not apply to the following activities:

(1) ''Dry'' fuel blending operations, ''dry'' waste solidification/stabilization operations, ''dry'' used oil filter or oily absorbents recycling operations, or ''dry'' high temperature metals recovery operations. However, this part does apply to wastewater discharges from a CWT resulting from any of these operations that do produce wastewater.

(2) The discharge of marine generated wastes including wash water from equipment and tank cleaning, ballast water, bilge water, and other wastes generated (while operating on inland, coastal, or open waters or while berthed) as part of routine ship maintenance and operation as long as they are treated and discharged at the ship servicing facility where it is off-loaded. The discharges resulting from the treatment of marine generated wastes that are off-loaded and subsequently sent to a centralized waste treatment facility at a separate location are, however, subject to this part.

(3) Discharge of wastewater from land treatment units or land application operations.

(4) Discharge of wastewater from facilities that are engaged exclusively in landfilling activities and/or the treatment of landfill wastewaters (whether generated on or off-site). The discharge resulting from the treatment of landfill wastewater, whether generated on-site or off-site, treated at CWT facilities along with other off-site waste is, however, subject to this part.

(5) Discharge of wastewater from facilities that are engaged exclusively in incineration activities. The discharge resulting from the treatment of off-site wastewater generated in the incineration of industrial waste that is treated at a CWT facility along with other off-site wastestreams (subject to this part) is subject to this part.

(d) Notwithstanding paragraph (a) of this section, the provisions of this part are not applicable to any metals treatment and recovery wastewater discharges which are subject to the secondary metals provisions of 40 CFR

part 421, the Nonferrous Metals Manufacturing Point Source Category. These secondary metals subcategories are Subpart C (Secondary Aluminum Smelting Subcategory), Subpart F (Secondary Copper Subcategory), Subpart L (Secondary Silver Subcategory), Subpart M (Secondary Lead Subcategory), Subpart P (Primary and Secondary Germanium and Gallium Subcategory), Subpart Q (Secondary Indium Subcategory), Subpart R (Secondary Mercury Subcategory), Subpart T (Secondary Molybdenum and Vanadium Subcategory), Subpart V (Secondary Nickel Subcategory), Subpart X (Secondary Precious Metals Subcategory), Subpart Z (Secondary Tantalum Subcategory), Subpart AA (Secondary Tin Subcategory), Subpart AB (Primary and Secondary Titanium Subcategory), Subpart AC (Secondary Tungsten and Cobalt Subcategory), and Subpart AD (secondary Uranium Subcategory).

§ 437.2 General definitions.

As used in this part:

(a) The general definitions and abbreviations in 40 CFR part 401 apply to this part.

(b) *Alternative effluent limitations or pretreatment standards* mean effluent limitations determined on a case-by-case basis under section 402(a)(1) of the CWA or pretreatment standards developed as local limits by the control authority under 40 CFR § 403.6(c) that apply to the discharge of wastewater subject to this provision. The permit writer (or control authority) will calculate these limitations or standards using a ''building block'' approach or the ''combined wastestream formula.'' Under this approach, the permit writer (or control authority) will develop flow-weighted effluent limitations or standards for the treated combined wastestream by applying the limitations or standards in 40 CFR subchapter N that would otherwise apply to a particular wastestream received from off-site if the wastestream were treated and discharged from the facility at which it was generated.

(c) *Centralized waste treatment (CWT) facility* means any facility that treats (for disposal, recycling or recovery of material) any hazardous or non-hazardous industrial wastes, hazardous or non-hazardous industrial wastewater, and/or used material received from off-site. ''CWT facility'' includes both a facility that treats waste received exclusively from off-site and a facility that treats wastes generated on-site as well as waste received from off-site. For example, an organic chemical manufacturing plant may, in certain circumstances, be a CWT facility if it treats industrial wastes received from offsite as well as industrial waste generated at the organic chemical manufacturing plant. CWT facilities may also include re-refiners and may be owned by the federal government.

(d) *Centralized waste treatment wastewater* means any wastewater generated as a result of CWT activities. CWT wastewater sources may include, but are not limited to: liquid waste receipts, solubilization water, used oil emulsion-breaking wastewater, tanker truck/drum/roll-off box washes, equipment washes, air pollution control scrubber blow-down, laboratory-derived wastewater, on-site landfill wastewaters, and contaminated storm water.

(e) *Contaminated storm water* means storm water which comes in direct contact with CWT wastes, the waste handling and treatment areas, or other centralized waste treatment wastewater as defined in paragraph (d) of this section.

(f) *Discharger* means a facility that discharges wastewater directly to waters of the United States or introduces wastewater to a publicly-owned treatment works.

(g) *Dry* means not producing a wastewater.

(h) *Equivalent treatment* means a wastewater treatment system that achieves comparable pollutant removals to the applicable treatment technology selected as the basis for the limitations and pretreatment standards. Comparable removals may be demonstrated through literature, treatability tests, or self-monitoring data.

(i) *Fuel blending* means the process of combining waste, wastewater, or used material for the purpose of regenerating a fuel for reuse. However, fuel blending may be loosely applied to any

process where recovered hydrocarbons are combined as a fuel product where some pretreatment operations generate wastewater.

(j) *High temperature metals recovery* means a metals recovery process in which solid forms of metal-containing materials are processed with a heat-based pyrometallurgical technology to produce a metal product.

(k) *Marine generated waste* means any waste, wastewater, and/or used material generated as part of the normal maintenance and operation of a ship, boat, or barge operating on inland, coastal, or open waters, or while berthed.

(l) *Metal-bearing wastes* means wastes and/or used materials from manufacturing or processing facilities or other commercial operations that contain significant quantities of metal pollutants, but not significant quantities of oil and grease (generally less than 100 mg/L). Examples of these wastes are spent electroplating baths and sludges, metal-finishing rinse water and sludges, chromate wastes, blow-down water and sludges from air pollution control, spent anodizing solutions, incineration air pollution control wastewaters, waste liquid mercury, cyanide containing wastes greater than 136 mg/L, and waste acids and bases with or without metals.

(m) *Multiple wastestream CWT facility* means a CWT facility which accepts waste in more than one CWT subcategory (metals, oils, or organics) and combines any portion of these different subcategory wastes at any point prior to the compliance discharge sampling location.

(n) *Off-site* means outside the boundaries of a facility.

(o) *Oily absorbent recycling* means the process of recycling oil-soaked or contaminated disposable rags, paper, or pads for the purpose of regenerating a fuel for reuse.

(p) *Oily wastes* means wastes and/or used materials that contain oil and grease (generally at or in excess of 100 mg/L) from manufacturing or processing facilities or other commercial operations. Examples of these wastes are used oils, oil-water emulsions or mixtures, lubricants, coolants, contaminated groundwater clean-up from petroleum sources, used petroleum products, oil spill clean-up, bilge water, rinse/wash waters from petroleum sources, interceptor wastes, off-specification fuels, underground storage tank remediation waste, and tank clean out from petroleum or oily sources.

(q) *On-site* means within the boundaries of a facility. A facility may encompass land areas that are bisected by public thoroughfares but are under the control of a common owner.

(r) *Organic wastes* means wastes and/or used materials that contain organic pollutants, but not a significant quantity of oil and grease (generally less than 100 mg/L) from manufacturing or processing facilities or other commercial operations. Examples of these wastes are landfill leachate, contaminated groundwater clean-up from non-petroleum sources, solvent-bearing wastes, off-specification organic product, still bottoms, byproduct glycols, wastewater from paint washes, wastewater from adhesives and/or epoxies, wastewater from chemical product operations, and tank clean-out from organic, non-petroleum sources.

(s) The following regulated parameters are listed with approved methods of analysis in Table 1B at 40 CFR 136.3, and are defined as follows:

(1) *Antimony* means total antimony.

(2) *Arsenic* means total arsenic.

(3) *Barium* means total barium.

(4) BOD_5 means 5-day biochemical oxygen demand.

(5) *Cadmium* means total cadmium.

(6) *Chromium* means total chromium.

(7) *Cobalt* means total cobalt.

(8) *Copper* means total copper.

(9) *Cyanide* means total cyanide.

(10) *Lead* means total lead.

(11) *Mercury* means total mercury.

(12) *Molybdenum* means total molybdenum.

(13) *Nickel* means total nickel.

(14) *O&G* means total recoverable oil and grease (n-hexane extractable material).

(15) *Selenium* means total selenium.

(16) *Silver* means total silver.

(17) *Tin* means total tin.

(18) *Titanium* means total titanium.

(19) *TSS* means total suspended solids.

(20) *Vanadium* means total vanadium.

(21) *Zinc* means total zinc.

(t) The following regulated parameters are listed with approved methods of analysis in Table 1C at 40 CFR 136.3:

(1) Bis(2-ethylhexyl) phthalate.

(2) Butylbenzyl phthalate.

(3) Fluoranthene.

(4) Phenol.

(5) 2,4,6-trichlorophenol.

(u) The following regulated parameters are listed with approved methods of analysis (Methods 625 and 1625) at 40 CFR 136.3, Appendix A:

(1) Acetone.

(2) Acetophenone.

(3) Aniline.

(4) 2-Butanone.

(5) Carbazole.

(6) o-Cresol.

(7) p-Cresol.

(8) n-Decane.

(9) 2,3-dichloroaniline.

(10) n-Octadecane.

(11) Pyridine.

(v) *Pipeline* means an open or closed conduit used for the conveyance of material. A pipeline includes a channel, pipe, tube, trench, or ditch, or fixed delivery system.

(w) *Product stewardship* means a manufacturer's treatment or recovery of its own unused products, shipping and storage containers with product residues, off-specification products, and does not include spent or used materials from use of its products.

(x) *Re-refining* means the processing of used oil using distillation, hydrotreating, and/or other treatment employing acid, caustic, solvent, clay and/or chemicals in order to produce high quality base stock for lubricants or other petroleum products.

(y) *Recovery* means the recycling or processing of a waste, wastewater or used material such that the material, or a portion thereof, may be reused or converted to a raw material, intermediate, or product. Recovery does not include the re-use of treated or untreated wastewater in place of potable or pure water in industrial processes such as the use of secondary POTW effluents as non-contact cooling water, storm water in place of process water, or the re-use of spent chemicals in place of virgin treatment chemicals.

(z) *Solidification* means the addition of sorbents to convert liquid or semi-liquid waste to a solid by means of adsorption, absorption or both. The process is usually accompanied by stabilization.

(aa) *Solvent recovery* includes fuel blending operations and the recycling of spent solvents through separation of solvent mixtures in distillation columns. Solvent recovery may require an additional, pretreatment step prior to distillation.

(bb) *Stabilization* means a waste process that decreases the mobility of waste constituents by means of a chemical reaction. For the purpose of this rule, chemical precipitation is not a technique for stabilization.

(cc) *Treatment* means any method, technique, or process designed to change the physical, chemical or biological character or composition of any metal-bearing, oily, or organic wastes to neutralize such wastes; to render such wastes amenable to discharge; or to recover energy or recover metal, oil, or organic content from the wastes. Treatment does not include (a) the re-use of treated or untreated wastewater in place of potable or pure water in industrial processes such as the use of secondary POTW effluents as non-contact cooling water or storm water in place of process water or (b) the re-use of treated or untreated spent chemicals (such as pickle liquor) as treatment chemicals.

(dd) *Non-contaminated storm water* means storm water which does not come in direct contact with CWT wastes, the waste handling and treatment areas, or other CWT wastewater that is defined in paragraph (d) of this section.

(ee) *Used oil filter recycling* means crushing and draining of used oil filters of entrained oil and/or shredding and separation of used oil filters.

(ff) *Waste* includes aqueous, non-aqueous, and solid waste, wastewater, and/or used material.

§ 437.3 General pretreatment standards.

Any source subject to this part that introduces process wastewater pollutants into a publicly owned treatment works (POTW) must comply with 40 CFR part 403.

§ 437.4 Monitoring requirements.

(a) Permit compliance monitoring is required for each regulated parameter.

(b) Any CWT facility that discharges wastewater resulting from the treatment of metal-bearing waste, oily waste, or organic-bearing waste must monitor as follows:

(1) Facilities subject to more than one subpart of this part must monitor for compliance for each subpart after treatment and before mixing of the waste with wastes of any other subpart. Alternatively, a multiple wastestream subcategory facility may certify that it provides equivalent treatment as defined in § 437.2(h) for the applicable waste and monitor for compliance with the applicable set of multiple wastestream subcategory limitations after mixing.

(2) Facilities subject to one or more subpart of this part must monitor for compliance with the applicable subpart after treatment and before mixing of the waste with wastes of any other subpart, uncontaminated storm water, or wastewater subject to another effluent limitation or standard in Subchapter N. If, however, the facility can demonstrate to the receiving POTW or permitting authority the capability of achieving the effluent limitation or standard for each subpart after treatment and before mixing with other wastestreams, the facility may monitor for compliance after mixing. In the case of a facility which elects to comply with the applicable set of multiple wastestream subcategory limitations or standards, it is only subject to one subpart.

(3) When a CWT facility treats any waste receipt that contains cyanide at a concentration higher than 136 mg/L, the CWT facility must monitor for cyanide after cyanide treatment and before dilution with other wastestreams. If, however, the facility can demonstrate to the receiving POTW or permitting authority the capability of achieving the cyanide limitation or standard after cyanide treatment and before mixing with other wastestreams, the facility may monitor for compliance after mixing.

Subpart A—Metals Treatment and Recovery

§ 437.10 Applicability.

(a) Except as provided in § 437.1(b), (c), or (d) or in paragraph (b) of this section, this subpart applies to that portion of the discharge of wastewater from a CWT facility that results from the treatment of, or recovery of metals from, both metal-bearing wastes received from off-site and other CWT wastewater associated with the treatment of, or recovery of metal-bearing wastes.

(b) In order to ensure appropriate treatment rather than dilution of dissimilar wastes, an NPDES permit writer or control authority may require a new source or an existing facility subject to this subpart to achieve alternative effluent limitations and standards as defined in § 437.2(b) in the following circumstances:

(1) The facility receives, on a continuing basis, flows of process wastewater from five or fewer facilities subject to 40 CFR Subchapter N limitations and standards; and

(2) The process wastewater flows received for treatment at the facility have relatively consistent pollutant profiles.

§ 437.11 Effluent limitations attainable by the application of the best practicable control technology currently available (BPT).

(a) Except as provided in 40 CFR 125.30 through 125.32 or 437.10(b), any existing point source subject to this subpart must achieve the following effluent limitations representing the application of BPT:

BPT LIMITATIONS

Regulated parameter	Maximum daily [1]	Maximum monthly avg.[1]
Conventional Parameters		
O&G	205	50.2
pH	([2])	([2])
TSS	60.0	31.0
Metal Parameters		
Antimony	0.249	0.206
Arsenic	0.162	0.104
Cadmium	0.474	0.0962
Chromium	15.5	3.07
Cobalt	0.192	0.124
Copper	4.14	1.06

BPT LIMITATIONS—Continued

Regulated parameter	Maximum daily [1]	Maximum monthly avg.[1]
Lead	1.32	0.283
Mercury	0.00234	0.000739
Nickel	3.95	1.45
Selenium	1.64	0.408
Silver	0.120	0.0351
Tin	0.409	0.120
Titanium	0.0947	0.0618
Vanadium	0.218	0.0662
Zinc	2.87	0.641

[1] mg/L (ppm).
[2] Within the range 6 to 9.

(b) The following in-plant limitations apply to metal-bearing wastewater containing cyanide:

IN-PLANT LIMITATIONS

Regulated parameter	Maximum daily [1]	Maximum monthly avg.[1]
Cyanide	500	178

[1] mg/L (ppm).

§ 437.12 Effluent limitations attainable by the application of the best conventional pollutant control technology (BCT).

Except as provided in 40 CFR 125.30 through 125.32 or 437.10(b), any existing point source subject to this subpart must achieve the following effluent limitations representing the application of BCT: Limitations for oil and grease, pH, and TSS are the same as the corresponding limitation specified in § 437.11(a).

§ 437.13 Effluent limitations attainable by the application of the best available technology economically achievable (BAT).

(a) Except as provided in 40 CFR 125.30 through 125.32 or 437.10(b), any existing point source subject to this subpart must achieve the following effluent limitations representing the application of BAT: Limitations for antimony, arsenic, cadmium, chromium, cobalt, copper, lead, mercury, nickel, selenium, silver, tin, titanium, vanadium, and zinc are the same as the corresponding limitation specified in § 437.11(a).

(b) In-plant standards for cyanide are the same as the limitations specified in § 437.11(b).

§ 437.14 New source performance standards (NSPS).

(a) Except as provided in § 437.10(b), any new source subject to this subpart must achieve the following performance standards:

PERFORMANCE STANDARDS

Regulated parameter	Maximum daily [1]	Maximum monthly avg. [1]
Contentional Parameters		
O&G	205	50.2
pH	([2])	([2])
TSS	29.6	11.3
Metal Parameters		
Antimony	0.111	0.0312
Arsenic	0.0993	0.0199
Cadmium	0.782	0.163
Chromium	0.167	0.0522
Cobalt	0.182	0.0703
Copper	0.659	0.216
Lead	1.32	0.283
Mercury	0.000641	0.000246
Nickel	0.794	0.309
Selenium	0.176	0.0698
Silver	0.0318	0.0122
Tin	0.0955	0.0367
Titanium	0.0159	0.00612
Vanadium	0.0628	0.0518
Zinc	0.657	0.252

[1] mg/L (ppm).
[2] Within the range 6 to 9.

(b) In-plant standards for cyanide are the same as the limitations specified in § 437.11(b).

§ 437.15 Pretreatment standards for existing sources (PSES).

(a) Except as provided in 40 CFR 403.7, 403.13 or 437.10(b), and no later than December 22, 2003, any existing source subject to this subpart must achieve the following pretreatment standards: Standards for antimony, arsenic, cadmium, chromium, cobalt, copper, lead, mercury, nickel, selenium, silver, tin, titanium, vanadium, and zinc are the same as the corresponding limitation specified in § 437.11(a).

(b) In-plant standards for cyanide are the same as the limitations specified in § 437.11(b).

§ 437.16 Pretreatment standards for new sources (PSNS).

(a) Except as provided in 40 CFR 403.7 or 437.10(b), any new source subject to

this subpart must achieve the following pretreatment standards: Standards for antimony, arsenic, cadmium, chromium, cobalt, copper, lead, mercury, nickel, selenium, silver, tin, titanium, vanadium, and zinc are the same as the corresponding limitation specified in § 437.11(a)

(b) In-plant standards for cyanide are the same as the limitations specified in § 437.11(b).

Subpart B—Oils Treatment and Recovery

§ 437.20 Applicability.

(a) Except as provided in § 437.1(b), (c), or (d) or in paragraph (b) of this section, this subpart applies to that portion of the discharge of wastewater from a CWT facility that results from the treatment or recovery of oil from both oily wastes received from off-site and other CWT wastewater associated with the treatment of, or recovery of oily wastes.

(b) In order to ensure appropriate treatment rather than dilution of dissimilar wastes, an NPDES permit writer or control authority may require a new source or an existing source subject to this subpart to achieve alternative effluent limitations and standards, as defined in § 437.2(b), in the following circumstances:

(1) The facility receives, on a continuing basis, flows of process wastewater from five or fewer facilities subject to 40 CFR Subchapter N limitations and standards; and

(2) The process wastewater flows received for treatment at the facility have relatively consistent pollutant profiles.

§ 437.21 Effluent limitations attainable by the application of the best practicable control technology currently available (BPT).

Except as provided in 40 CFR 125.30 through 125.32 or 437.20(b), any existing point source subject to this subpart must achieve the following effluent limitations representing the application of BPT:

BPT LIMITATIONS

Regulated parameter	Maximum daily [1]	Maximum monthly avg.[1]
Conventional Parameters		
O&G	127	38.0
pH	([2])	([2])
TSS	74.1	30.6
Metal Parameters		
Antimony	0.237	0.141
Arsenic	2.95	1.33
Barium	0.427	0.281
Cadmium	0.0172	0.0102
Chromium	0.746	0.323
Cobalt	56.4	18.8
Copper	0.500	0.242
Lead	0.350	0.160
Mercury	0.0172	0.00647
Molybdenum	3.50	2.09
Tin	0.335	0.165
Titanium	0.0510	0.0299
Zinc	8.26	4.50
Organic Parameters		
Bis(2-ethylhexyl) phthalate	0.215	0.101
Butylbenzyl phthalate	0.188	0.0887
Carbazole	0.598	0.276
n-Decane	0.948	0.437
Fluoranthene	0.0537	0.0268
n-Octadecane	0.589	0.302

[1] mg/L (ppm).
[2] Within the range 6 to 9.

§ 437.22 Effluent limitations attainable by the application of the best conventional pollutant control technology (BCT).

Except as provided in 40 CFR 125.30 through 125.32 or 437.20(b), any existing point source subject to this subpart must achieve the following effluent limitations attainable by the application of BCT: Limitations for O&G, pH, and TSS are the same as the corresponding limitation specified in § 437.21.

§ 437.23 Effluent limitations attainable by the application of the best available technology economically achievable (BAT).

Except as provided in 40 CFR 125.30 through 125.32 or 437.20(b), any existing point source subject to this subpart must achieve the following effluent limitations by the application of BAT: Limitations for antimony, arsenic, barium, cadmium, chromium, cobalt, copper, lead, mercury, molybdenum, tin, titanium, zinc, butylbenzyl phthalate, carbazole, n-decane, bis(2-ethylhexyl)

phthalate, fluoranthene, and n-octadecane are the same as the corresponding limitation specified in § 437.21.

§ 437.24 New source performance standards (NSPS).

Except as provided in § 437.20(b), any new source subject to this subpart must achieve the following performance standards: Standards for oil and grease, pH, TSS, antimony, arsenic, barium, cadmium, chromium, cobalt, copper, lead, mercury, molybdenum, tin, titanium, zinc, butylbenzyl phthalate, carbazole, n-decane, bis(2-ethylhexyl) phthalate, fluoranthene, and n-octadecane are the same as the corresponding limitation specified in § 437.21.

§ 437.25 Pretreatment standards for existing sources (PSES).

Except as provided in 40 CFR 403.7, 403.13 or § 437.20(b), and no later than December 22, 2003, any existing source subject to this subpart must achieve the following pretreatment standards:

PRETREATMENT STANDARDS (PSES)

Regulated parameter	Maximum daily [1]	Maximum monthly avg.[1]
Metal Parameters		
Antimony	0.237	0.141
Barium	0.427	0.281
Chromium	0.947	0.487
Cobalt	56.4	18.8
Copper	0.405	0.301
Lead	0.222	0.172
Molybdenum	3.50	2.09
Tin	0.249	0.146
Zinc	6.95	4.46
Organic Parameters		
Bis(2-ethylhexyl) phthalate	0.267	0.158
Carbazole	0.392	0.233
n-Decane	5.79	3.31
Fluoranthene	0.787	0.393
n-Octadecane	1.22	0.925

[1] mg/L (ppm).

§ 437.26 Pretreatment standards for new sources (PSNS).

Except as provided in 40 CFR 403.7 or § 437.20(b), any new source subject to this subpart must achieve the following pretreatment standards: Standards for antimony, barium, chromium, cobalt, copper, lead, molybdenum, tin, zinc, carbazole, n-decane, bis(2-ethylhexyl) phthalate, fluoranthene, and n-octadecane are the same as the corresponding limitation specified in § 437.21.

Subpart C—Organics Treatment and Recovery

§ 437.30 Applicability.

(a) Except as provided in § 437.1(b), (c), or (d) or in paragraph (b) of this section, this subpart applies to that portion of the discharge of wastewater from a CWT facility that results from the treatment of, or recovery of organic material from, both organic wastes received from off-site and other CWT wastewater associated with the treatment of, or recovery of organic wastes.

(b) In order to ensure appropriate treatment rather than dilution of dissimilar wastes, an NPDES permit writer or control authority may require a new source or an existing facility subject to § 437.30 to achieve alternative effluent limitations and standards as defined in § 437.2 (h) in the following circumstances:

(1) The facility receives, on a continuing basis, flows of process wastewater from five or fewer facilities subject to 40 CFR Subchapter N limitations and standards; and

(2) The process wastewater flows received for treatment at the facility have relatively consistent pollutant profiles.

§ 437.31 Effluent limitations attainable by the application of the best practicable control technology currently available (BPT).

Except as provided in 40 CFR 125.30 through 125.32 or § 437.30(b), any existing point source subject to this subpart must achieve the following effluent limitations representing the application of BPT:

BPT LIMITATIONS

Regulated parameter	Maximum daily [1]	Maximum monthly avg.[1]
Conventional Parameters		
BOD_5	163	53.0
pH	([2])	([2])
TSS	216	61.3

BPT LIMITATIONS—Continued

Regulated parameter	Maximum daily [1]	Maximum monthly avg.[1]
Metal Parameters		
Antimony	0.928	0.679
Copper	0.865	0.757
Molybdenum	1.01	0.965
Zinc	0.497	0.420
Organic Parameters		
Acetone	30.2	7.97
Acetophenone	0.114	0.0562
Aniline	0.0333	0.0164
2–Butanone	4.81	1.85
o-Cresol	1.92	0.561
p-Cresol	0.698	0.205
2,3–Dichloroaniline	0.0731	0.0361
Phenol	3.65	1.08
Pyridine	0.370	0.182
2,4,6–Trichlorophenol	0.155	0.106

[1] mg/L (ppm).
[2] Within the range 6 to 9.

§ 437.32 Effluent limitations attainable by the application of the best conventional pollutant control technology (BCT).

Except as provided in 40 CFR 125.30 through 125.32 or § 437.30(b), any existing point source subject to this subpart must achieve the following effluent limitations representing the application of BCT: Limitations for BOD_5, pH, and TSS are the same as the corresponding limitation specified in § 437.31.

§ 437.33 Effluent limitations attainable by the application of the best available technology economically achievable (BAT).

Except as provided in 40 CFR 125.30 through 125.32 or § 437.30(b), any existing point source subject to this subpart must achieve limitations representing the application of BAT: Limitations for antimony, copper, molybdenum, zinc, acetone, acetophenone, aniline, 2-butanone, o-cresol, p-cresol, 2,3-dichloroaniline, phenol, pyridine, and 2,4,6-trichlorophenol are the same as the corresponding limitation specified in § 437.31.

§ 437.34 New source performance standards (NSPS).

Except as provided in § 437.30(b), any new source subject to this subpart must achieve the following new source performance standards: Standards for BOD_5, pH, TSS, antimony, copper, molybdenum, zinc, acetone, acetophenone, aniline, 2-butanone, o-cresol, p-cresol, 2,3-dichloroaniline, phenol, pyridine, and 2,4,6-trichlorophenol are the same as the corresponding limitation specified in § 437.31.

§ 437.35 Pretreatment standards for existing sources (PSES).

Except as provided in 40 CFR 403.7, 403.13 or § 437.30(b), and no later than December 22, 2003, any existing source subject to this subpart must achieve the following pretreatment standards: Standards for molybdenum, 2,3-dichloroaniline, o-cresol, p-cresol, 2,4,6-trichlorophenol are the same as the corresponding limitation specified in § 437.31.

§ 437.36 Pretreatment standards for new sources (PSNS).

Except as provided in 40 CFR 403.7 or § 437.30(b), any new source subject to this subpart must achieve the following pretreatment standards: Standards for molybdenum, 2,3-dichloroaniline, o-cresol, p-cresol, 2,4,6-trichlorophenol are the same as the corresponding limitation specified in § 437.31.

Subpart D—Multiple Wastestreams

§ 437.40 Applicability.

(a) Except as provided in § 437.1(b), (c), or (d) or in paragraph (b) of this section, facilities that treat wastes subject to more than one of the previous Subparts must comply with either provisions of this subpart or the applicable provisions of Subpart A, B, or C. The provisions of this subpart are applicable to that portion of wastewater discharges from a centralized waste treatment facility that results from mixing any combination of treated or untreated waste otherwise subject to Subpart A, Subpart B, or Subpart C of this part only if a facility requests the permit writer or control authority to develop Subpart D limitations (or standards) and establishes that it provides equivalent treatment as defined in § 437.2(h).

(b) In order to ensure appropriate treatment rather than dilution of dissimilar wastes, an NPDES permit writer or control authority may require a

new or existing facility subject to paragraph (a) of this section to achieve alternative effluent limitations or standards as defined in § 437.2 (b) in the following circumstances:

(1) The facility receives, on a continuing basis, flows of process wastewater from five or fewer facilities subject to 40 CFR Subchapter N limitations and standards; and

(2) The process wastewater flows received for treatment at the facility have relatively consistent pollutant profiles.

§ 437.41 Special definitions.

(a) Initial Certification Statement for this subpart means a written submission to the appropriate permitting authority (either the local control authority (the POTW) or NPDES permit writer) that is signed by the responsible corporate officer as defined in 40 CFR 403.12(l) or 40 CFR 122.22. The statement must:

(1) List and describe the subcategories of wastes accepted for treatment at the facility;

(2) List and describe the treatment systems in-place at the facility and conditions under which the treatment systems are operated for the subcategories of wastes accepted for treatment at the facility;

(3) Include information and supporting data establishing that these treatment systems will achieve equivalent treatment.

(b) Periodic Certification Statement for this subpart means a written submission to the appropriate permitting authority (the local control authority (the POTW) or NPDES permit writer) which certifies that the facility is operating its treatment systems to provide equivalent treatment as set forth in the initial certification. In the event that the facility has modified its treatment systems, the facility should submit a description of the modified systems and information and supporting data to establish that the modified system will achieve equivalent treatment. The periodic certification statement must be signed by the responsible corporate officer as defined in 40 CFR 403.12(l) or 40 CFR 122.22.

(c) On-site Compliance Paperwork for this subpart means data or information retained in the offices of the facility which supports the initial and periodic certification statements. This Paperwork must:

(1) List and describe the subcategory wastes being accepted for treatment at the facility;

(2) List and describe the treatment systems in-place at the facility, modifications to the treatment systems and the conditions under which the systems are operated for the subcategories of wastes accepted for treatment at the facility;

(3) Provide information and supporting data establishing that these treatment systems will achieve equivalent treatment;

(4) Describe the procedures it follows to ensure that its treatment systems are well-operated and maintained; and

(5) Explain why the procedures it has adopted will ensure its treatment systems are well-operated and maintained.

§ 437.42 Effluent limitations attainable by the application of the best practicable control technology currently available (BPT).

(a) Except as provided in 40 CFR 125.30 through 125.32 or § 437.40(b), any existing facility subject to this subpart which combines treated or untreated wastes from subparts A, B, or C of this part may be subject to Multiple Wastestream Subcategory effluent limitations representing the application of BPT set forth in paragraphs (b), (c), (d), or (e) of this section if the discharger agrees to the following conditions in its NPDES permit:

(1) The discharger will meet the applicable Multiple Wastestream Subcategory limitations set forth in (b), (c), (d) or (e);

(2) The discharger will notify its NPDES permit writer at the time of renewal or modification of its permit, of its desire to be subject to the Multiple Waste Subcategory by submitting to the NPDES permit writer an initial certification statement as described in § 437.41(a);

(3) The discharger will submit to its NPDES permitting authority a periodic certification statement as described in § 437.41(b) once a year; and

(4) The discharger will maintain at the office of the facility and make available for inspection the on-site compliance paperwork as described in § 437.41(c).

(b) Combined waste receipts from subparts A, B, and C of this part. (1) As provided in § 437.42(a), any existing point source subject to this paragraph must achieve the following effluent limitations representing the application of BPT:

BPT LIMITATIONS

Regulated parameter	Maximum daily [1]	Maximum monthly avg.[1]
Conventional Parameters		
BOD_5	163	53.0
O&G	127	38.0
pH	([2])	([2])
TSS	74.1	30.6
Metal Parameters		
Antimony	0.237	0.141
Arsenic	0.162	0.104
Barium	0.427	0.281
Cadmium	0.0172	0.0102
Chromium	0.746	0.323
Cobalt	0.192	0.124
Copper	0.500	0.242
Lead	0.350	0.160
Mercury	0.00234	0.000739
Molybdenum	1.01	0.965
Nickel	3.95	1.45
Selenium	1.64	0.408
Silver	0.120	0.0351
Tin	0.409	0.120
Titanium	0.0510	0.0299
Vanadium	0.218	0.0662
Zinc	0.497	0.420
Organic Parameters		
Acetone	30.2	7.97
Acetophenone	0.114	0.0562
Aniline	0.0333	0.0164
Bis(2-ethylhexyl) phthalate	0.215	0.101
2-Butanone	4.81	1.85
Butylbenzyl phthalate	0.188	0.0887
Carbazole	0.598	0.276
o-Cresol	1.92	0.561
p-Cresol	0.698	0.205
n-Decane	0.948	0.437
2,3-Dichloroaniline	0.0731	0.0361
Fluoranthene	0.0537	0.0268
n-Octadecane	0.589	0.302
Phenol	3.65	1.08
Pyridine	0.370	0.182
2,4,6-Trichlorophenol	0.155	0.106

[1] mg/L (ppm).
[2] OSC Within the range 6 to 9.

(2) The following in-plant limitations apply to metal-bearing wastewater containing cyanide:

IN-PLANT LIMITATIONS

Regulated parameter	Maximum daily [1]	Maximum monthly avg. [1]
Cyanide	500	178

[1] mg/L (ppm).

(c) Combined waste receipts from subparts A and B of this part. (1) As provided in § 437.42(a), any existing point source subject to this paragraph must achieve the following effluent limitations representing the application of BPT:

BPT LIMITATIONS

Regulated parameter	Maximum daily [1]	Maximum monthly avg. [1]
Conventional Parameters		
O&G	127	38.0
pH	([2])	([2])
TSS	74.1	30.6
Metal Parameters		
Antimony	0.237	0.141
Arsenic	0.162	0.104
Barium	0.427	0.281
Cadmium	0.0172	0.0102
Chromium	0.746	0.323
Cobalt	0.192	0.124
Copper	0.500	0.242
Lead	0.350	0.160
Mercury	0.00234	0.000739
Molybdenum	3.50	2.09
Nickel	3.95	1.45
Selenium	1.64	0.408
Silver	0.120	0.0351
Tin	0.409	0.120
Titanium	0.0510	0.0299
Vanadium	0.218	0.0662
Zinc	2.87	0.641
Organic Parameters		
Bis(2-ethylhexyl) phthalate	0.215	0.101
Butylbenzyl phthalate	0.188	0.0887
Carbazole	0.598	0.276
n-Decane	0.948	0.437
Fluoranthene	0.0537	0.0268
n-Octadecane	0.589	0.302

[1] mg/L (ppm).
[2] Within the range 6 to 9.

(2) The following in-plant limitations apply to metal-bearing wastewater containing cyanide:

IN-PLANT LIMITATIONS

Regulated parameter	Maximum daily [1]	Maximum monthly avg. [1]
Cyanide	500	178

[1] mg/L (ppm).

(d) Combined waste receipts from subparts A and C of this part. (1) As provided in § 437.42(a), any existing point source subject to this paragraph must achieve the following effluent limitations representing the application of BPT:

BPT LIMITATIONS

Regulated parameter	Maximum daily [1]	Maximum monthly avg. [1]
Conventional Parameters		
BOD_5	163	3.0
O&G	205	50.2
pH	([2])	([2])
TSS	60.0	31.0
Metal Parameters		
Antimony	0.249	0.206
Arsenic	0.162	0.104
Cadmium	0.474	0.0962
Chromium	15.5	3.07
Cobalt	0.192	0.124
Copper	0.865	0.757
Lead	1.32	0.283
Mercury	0.00234	0.000739
Molybdenum	1.01	0.965
Nickel	3.95	1.45
Selenium	1.64	0.408
Silver	0.120	0.0351
Tin	0.409	0.120
Titanium	0.0947	0.0618
Vanadium	0.218	0.0662
Zinc	0.497	0.420
Organic Parameters		
Acetone	30.2	7.97
Acetophenone	0.114	0.0562
Aniline	0.0333	0.0164
2-Butanone	4.81	1.85
o-Cresol	1.92	0.561
p-Cresol	0.698	0.205
2,3-Dichloroaniline	0.0731	0.0361
Phenol	3.65	1.08
Pyridine	0.370	0.182
2,4,6-Trichlorophenol	0.155	0.106

[1] mg/L (ppm).
[2] Within the range 6 to 9.

(2) The following in-plant limitations apply to metal-bearing wastewater containing cyanide:

IN-PLANT LIMITATIONS

Regulated parameter	Maximum daily [1]	Maximum monthly avg.[1]
Cyanide	500	178

[1] mg/L)ppm).

(e) Combined waste receipts from subparts B and C of this part. As provided in § 437.42(a), any existing point source subject to this paragraph must achieve the following effluent limitations representing the application of BPT:

BPT LIMITATIONS

Regulated parameter	Maximum daily [1]	Maximum monthly avg. [1]
Conventional Parameters		
BOD_5	163	53.0
O&G	127	38.0
pH	([2])	([2])
TSS	74.1	30.6
Metal Parameters		
Antimony	0.237	0.141
Arsenic	2.95	1.33
Barium	0.427	0.281
Cadmium	0.0172	0.0102
Chromium	0.746	0.323
Cobalt	56.4	18.8
Copper	0.500	0.242
Lead	0.350	0.160
Mercury	0.0172	0.00647
Molybdenum	1.01	0.965
Tin	0.335	0.165
Titanium	0.0510	0.0299
Zinc	0.497	0.420
Organic Parameters		
Acetone	30.2	7.97
Acetophenone	0.114	0.0562
Aniline	0.0333	0.0164
Bis(2-ethylhexyl) phthalate	0.215	0.101
2–Butanone	4.81	1.85
Butylbenzyl phthalate	0.188	0.0887
Carbazole	0.598	0.276
o-Cresol	1.92	0.561
p-Cresol	0.698	0.205
n-Decane	0.948	0.437
2,3–Dichloroaniline	0.0731	0.0361
Fluoranthene	0.0537	0.0268
n-Octadecane	0.589	0.302
Phenol	3.65	1.08
Pyridine	0.370	0.182
2,4,6–Trichlorophenol	0.155	0.106

[1] mg/L (ppm).
[2] Within the range 6 to 9.

§ 437.43 Effluent limitations attainable by the application of the best conventional pollutant control technology (BCT).

(a) Except as provided in 40 CFR 125.30 through 125.32 or 437.40(b), any existing facility subject to this subpart which combines treated or untreated wastes from subparts A, B, or C of this part may be subject to Multiple Wastestream Subcategory effluent limitations representing the application of BCT set forth in paragraphs (b), (c), (d), or (e) of this section if the discharger agrees to the following conditions in its NPDES permit:

(1) The discharger will meet the applicable Multiple Wastestream Subcategory limitations set forth in paragraphs (b), (c), (d) or (e) of this section;

(2) The discharger will notify its NPDES permit writer at the time of renewal or modification of its permit, of its desire to be subject to the Multiple Waste Subcategory by submitting to the NPDES permit writer an initial certification statement as described in § 437.41(a);

(3) The discharger will submit to its NPDES permitting authority a periodic certification statement as described in § 437.41(b) once a year; and

(4) The discharger will maintain at the office of the facility and make available for inspection the on-site compliance paperwork as described in § 437.41(c).

(b) Combined waste receipts from subparts A, B and C of this part: Limitations for BOD_5, O&G, pH, and TSS are the same as the corresponding limitation specified in § 437.42(b).

(c) Combined waste receipts from subparts A and B of this part: Limitations for O&G, pH, and TSS are the same as the corresponding limitation specified in § 437.42(c).

(d) Combined waste receipts from subparts A and C of this part: Limitations for BOD_5, O&G, pH, and TSS are the same as the corresponding limitation specified in § 437.42(d).

(e) Combined waste receipts from subparts B and C of this part: Limitations for BOD_5, O&G, pH, and TSS are the same as the corresponding limitation specified in § 437.42(e).

§ 437.44 Effluent limitations attainable by the application of the best available technology economically achievable (BAT).

(a) Except as provided in 40 CFR 125.30 through 125.32 or 437.40(b), any existing facility subject to this subpart which combines treated or untreated wastes from subparts A, B, or C of this part may be subject to Multiple Wastestream Subcategory effluent limitations representing the application of BAT set forth in paragraphs (b), (c), (d), or (e) of this section if the discharger agrees to the following conditions in its NPDES permit:

(1) The discharger will meet the applicable Multiple Wastestream Subcategory limitations set forth in paragraphs (b), (c), (d) or (e) of this section;

(2) The discharger will notify its NPDES permit writer at the time of renewal or modification of its permit, of its desire to be subject to the Multiple Waste Subcategory by submitting to the NPDES permit writer an initial certification statement as described in § 437.41(a);

(3) The discharger will submit to its NPDES permitting authority a periodic certification statement as described in § 437.41(b) once a year; and

(4) The discharger will maintain at the office of the facility and make available for inspection the on-site compliance paperwork as described in § 437.41(c).

(b) Combined waste receipts from subparts A, B and C of this part. (1) Limitations for the following parameters are the same as the corresponding limitation specified in § 437.42(b)(1):

Organic parameters	Metal parameters
Acetone	Antimony.
Acetophenone	Arsenic.
Aniline	Barium.
bis (2-ethylhexyl) phthalate	Cadmium.
2-Butanone	Chromium.
Butylbenzyl phthalate	Cobalt.
Carbazole	Copper.
o-Cresol	Lead.
p-Cresol	Mercury.
n-Decane	Molybdenum.
2,3-dichloroaniline	Nickel.
Fluoranthene	Selenium.
n-Octadecane	Silver.
Phenol	Tin.
Pyridine	Titanium.
2,4,6-trichlorophenol	Vanadium.
	Zinc.

(2) The in-plant limitations that apply to metal-bearing wastewater containing cyanide are the same as the corresponding limitations specified in § 437.42(b)(2).

(c) Combined waste receipts from subparts A and B of this part. (1) Limitations for the following parameters are the same as the corresponding limitation specified in § 437.42(c)(1):

Organic parameters	Metal parameters
Bis (2-ethylhexyl) phthalate	Antimony.
Butylbenzyl phthalate	Arsenic.
Carbazole	Barium.
n-Decane	Cadmium.
Fluoranthene	Chromium.

Organic parameters	Metal parameters
n-Octadecane	Cobalt. Copper. Lead. Mercury. Molybdenum. Nickel. Selenium. Silver. Tin. Titanium. Vanadium. Zinc.

(2) The in-plant limitations that apply to metal-bearing wastewater containing cyanide are the same as the corresponding limitations specified in § 437.42(c)(2).

(d) Combined waste receipts from subparts A and C of this part. (1) Limitations for the following parameters are the same as the corresponding limitation specified in § 437.42(d)(1):

Organic parameters	Metal parameters
Acetone	Antimony.
Acetophenone	Arsenic.
Aniline	Cadmium.
2-Butanone	Chromium.
o-Cresol	Cobalt.
p-Cresol	Copper.
Phenol	Lead.
Pyridine	Mercury.
2,4,6-trichlorophenol	Molybdenum.
	Nickel.
	Selenium.
	Silver.
	Tin.
	Titanium.
	Vanadium.
	Zinc.

(2) The in-plant limitations that apply to metal-bearing wastewater containing cyanide are the same as the corresponding limitations specified in § 437.42(e)(2).

(e) Combined waste receipts from subparts B and C of this part. Limitations for the following parameters are the same as the corresponding limitation specified in § 437.42(e):

Organic parameters	Metal parameters
Acetone	Antimony.
Acetophenone	Arsenic.
Aniline	Barium.
Bis(2-ethylhexyl) phthalate	Cadmium.
2-Butanone	Chromium.
Butylbenzyl phthalate	Cobalt.
Carbazole	Copper.
o-Cresol	Lead.
p-Cresol	Mercury.
n-Decane	Molybdenum.
2,3-dichloroaniline	Tin.
Fluoranthene	Titanium.
n-Octadecane	Zinc.
Phenol	
Pyridine	
2,4,6-trichlorophenol	

§ 437.45 New source performance standards (NSPS).

(a) Except as provided in § 437.40(b), any new source subject to this subpart which combines treated or untreated wastes from subparts A, B, or C of this part may be subject to Multiple Wastestream Subcategory effluent limitations representing the application of NSPS set forth in paragraphs (b), (c), (d), or (e) of this section if the discharger agrees to the following conditions in its NPDES permit:

(1) The discharger will meet the applicable Multiple Wastestream Subcategory limitations set forth in paragraphs (b), (c), (d) or (e) of this section;

(2) The discharger will notify its NPDES permit writer at the time of submitting its application for permit, of its desire to be subject to the Multiple Waste Subcategory by submitting to the NPDES permit writer an initial certification statement as described in § 437.41(a);

(3) The discharger will submit to its NPDES permitting authority a periodic certification statement as described in § 437.41(b) once a year; and

(4) The discharger will maintain at the office of the facility and make available for inspection the on-site compliance paperwork as described in § 437.41(c).

(b) Combined waste receipts from subparts A, B and C of this part. (1) As provided in § 437.45(a), any new source subject to this paragraph must achieve the following performance standards:

PERFORMANCE STANDARDS

Regulated parameter	Maximum daily [1]	Maximum monthly avg.[1]
Conventional Parameters		
BOD_5	163	53.0
O&G	127	38.0
pH	([2])	([2])
TSS	29.6	11.3
Metal Parameters		
Antimony	0.111	0.0312
Arsenic	0.0993	0.0199
Barium	0.427	0.281

PERFORMANCE STANDARDS—Continued

Regulated parameter	Maximum daily [1]	Maximum monthly avg.[1]
Cadmium	0.0172	0.0102
Chromium	0.167	0.0522
Cobalt	0.182	0.0703
Copper	0.659	0.216
Lead	0.350	0.160
Mercury	0.000641	0.000246
Molybdenum	1.01	0.965
Nickel	0.794	0.309
Selenium	0.176	0.0698
Silver	0.0318	0.0122
Tin	0.0955	0.0367
Titanium	0.0159	0.00612
Vanadium	0.0628	0.0518
Zinc	0.657	0.252
Organic Parameters		
Acetone	30.2	7.97
Acetophenone	0.114	0.0562
Aniline	0.0333	0.0164
Bis(2-ethylhexyl) phthalate	0.215	0.101
2-Butanone	4.81	1.85
Butylbenzyl phthalate	0.188	0.0887
Carbazole	0.598	0.276
o-Cresol	1.92	0.561
p-Cresol	0.698	0.205
n-Decane	0.948	0.437
2,3-Dichloroaniline	0.0731	0.0361
Fluoranthene	0.0537	0.0268
n-Octadecane	0.589	0.302
Phenol	3.65	1.08
Pyridine	0.370	0.182
2,4,6-Trichlorophenol	0.155	0.106

[1] mg/L (ppm).
[2] Within the range 6 to 9.

(2) The following in-plant limitations apply to metal-bearing wastewater containing cyanide:

IN-PLANT LIMITATIONS

Regulated parameter	Maximum daily [1]	Maximum monthly avg.[1]
Cyanide	500	178

[1] mg/L (ppm).

(c) Combined waste receipts from subparts A and B of this part. (1) As provided in § 437.45(a), any new source subject to this paragraph must achieve the following standards:

PERFORMANCE STANDARDS

Regulated parameter	Maximum daily[1]	Maximum monthly avg.[1]
Conventional Parameters		
O&G	127	38.0
pH	([2])	([2])
TSS	29.6	11.3
Metal Parameters		
Antimony	0.111	0.0312

PERFORMANCE STANDARDS—Continued

Regulated parameter	Maximum daily[1]	Maximum monthly avg.[1]
Arsenic	0.0993	0.0199
Barium	0.427	0.281
Cadmium	0.0172	0.0102
Chromium	0.167	0.0522
Cobalt	0.182	0.0703
Copper	0.659	0.216
Lead	0.350	0.160
Mercury	0.000641	0.000246
Molybdenum	3.50	2.09
Nickel	0.794	0.309
Selenium	0.176	0.0698
Silver	0.0318	0.0122
Tin	0.0955	0.0367
Titanium	0.0159	0.00612
Vanadium	0.0628	0.0518
Zinc	0.657	0.252
Organic Parameters		
Bis(2-ethylhexyl) phthalate	0.215	0.101
Butylbenzyl phthalate	0.188	0.0887
Carbazole	0.598	0.276
n-Decane	0.948	0.437
Fluoranthene	0.0537	0.0268
n-Octadecane	0.589	0.302

[1] mg/L (ppm).
[2] Within the range 6 to 9.

(2) The following in-plant limitations apply to metal-bearing wastewater containing cyanide:

IN-PLANT LIMITATIONS

Regulated parameter	Maximum daily[1]	Maximum monthly avg.[1]
Cyanide	500	178

[1] 1 mg/L (ppm).

(d) Combined waste receipts from subparts A and C of this part. (1) As provided in § 437.45(a), any new source subject to this paragraph must achieve the following performance standards:

PERFORMANCE STANDARDS

Regulated parameter	Maximum daily [1]	Maximum monthly avg.[1]
Conventional Parameters		
BOD_5	163	53.0
O&G	205	50.2
pH	([2])	([2])
TSS	29.6	11.3
Metal Parameters		
Antimony	0.111	0.0312
Arsenic	0.0993	0.0199
Cadmium	0.782	0.163
Chromium	0.167	0.0522
Cobalt	0.182	0.0703
Copper	0.659	0.216
Lead	1.32	0.283
Mercury	0.000641	0.000246

PERFORMANCE STANDARDS—Continued

Regulated parameter	Maximum daily [1]	Maximum monthly avg.[1]
Molybdenum	1.01	0.965
Nickel	0.794	0.309
Selenium	0.176	0.0698
Silver	0.0318	0.0122
Tin	0.0955	0.0367
Titanium	0.0159	0.00612
Vanadium	0.0628	0.0518
Zinc	0.657	0.252
Organic Parameters		
Acetone	30.2	7.97
Acetophenone	0.114	0.0562
Aniline	0.0333	0.0164
2-Butanone	4.81	1.85
o-Cresol	1.92	0.561
p-Cresol	0.698	0.205
2,3-Dichloroaniline	0.0731	0.0361
Phenol	3.65	1.08
Pyridine	0.370	0.182
2,4,6-Trichlorophenol	0.155	0.106

[1] mg/L (ppm).
[2] Within the range 6 to 9.

(2) The following in-plant limitations apply to metal-bearing wastewater containing cyanide:

IN-PLANT LIMITATIONS

Regulated parameter	Maximum daily [1]	Maximum monthly avg.[1]
Cyanide	500	178

[1] mg/L (ppm).

(e) Combined waste receipts from subparts B and C of this part. As provided in § 437.45(a), any new source subject to this paragraph must achieve the following performance standards:

PERFORMANCE STANDARDS

Regulated parameter	Maximum daily [1]	Maximum monthly avg. [1]
Conventional Parameters		
BOD_5	163	53.0
O&G	127	38.0
pH	(2)	(2)
TSS	74.1	30.6
Metal Parameters		
Antimony	0.237	0.141
Arsenic	2.95	1.33
Barium	0.427	0.281
Cadmium	0.0172	0.0102
Chromium	0.746	0.323
Cobalt	56.4	18.8
Copper	0.500	0.242
Lead	0.350	0.160
Mercury	0.0172	0.00647
Molybdenum	1.01	0.965
Tin	0.335	0.165
Titanium	0.0510	0.0299
Zinc	0.497	0.420
Organic Parameters		
Acetone	30.2	7.97
Acetophenone	0.114	0.0562
Aniline	0.0333	0.0164
Bis(2-ethylhexyl) phthalate	0.215	0.101
2-Butanone	4.81	1.85
Butylbenzyl phthalate	0.188	0.0887
Carbazole	0.598	0.276
o-Cresol	1.92	0.561
p-Cresol	0.698	0.205
n-Decane	0.948	0.437
2,3-Dichloroaniline	0.0731	0.0361
Fluoranthene	0.0537	0.0268
n-Octadecane	0.589	0.302
Phenol	3.65	1.08
Pyridine	0.370	0.182
2,4,6-Trichlorophenol	0.155	0.106

[1] mg/L (ppm).
[2] Within the range 6 to 9.

§ 437.46 Pretreatment standards for existing sources (PSES)

(a) Except as provided in 40 CFR 403.7, 403.13 or 437.40(b), any new source subject to this subpart which combines treated or untreated wastes from subparts A, B, or C of this part may be subject to Multiple Wastestream Subcategory pretreatment standards representing the application of PSES set forth in paragraphs (b), (c), (d), or (e) of this section if the discharger agrees to the following conditions in its permit:

(1) The discharger will meet the applicable Multiple Wastestream

Subcategory standards set forth in paragraphs (b), (c), (d) or (e) of this section;

(2) The discharger will notify its local control authority of its desire to be subject to the Multiple Waste Subcategory by submitting to the local control authority an initial certification statement as described in § 437.41(a);

(3) The discharger will submit to its local control authority a periodic certification statement as described in § 437.41(b) once a year; and

(4) The discharger will maintain at the office of the facility and make available for inspection the on-site compliance paperwork as described in § 437.41(c).

(b) Combined waste receipts from subparts A, B and C of this part. (1) As

provided in § 437.46(a), and no later than [Insert date—three years after publication], any existing source subject to this paragraph must achieve the following pretreatment standards:

PRETREATMENT STANDARDS (PSES)

Regulated parameter	Maximum daily [1]	Maximum monthly avg.[1]
Metal Parameters		
Antimony	0.237	0.141
Arsenic	0.162	0.104
Barium	0.427	0.281
Cadmium	0.474	0.0962
Chromium	0.947	0.487
Cobalt	0.192	0.124
Copper	0.405	0.301
Lead	0.222	0.172
Mercury	0.00234	0.000739
Molybdenum	1.01	0.965
Nickel	3.95	1.45
Selenium	1.64	0.408
Silver	0.120	0.0351
Tin	0.409	0.120
Titanium	0.0947	0.0618
Vanadium	0.218	0.0662
Zinc	2.87	0.641
Organic Parameters		
Bis(2-ethylhexyl) phthalate	0.267	0.158
Carbazole	0.392	0.233
o-Cresol	1.92	0.561
p-Cresol	0.698	0.205
n-Decane	5.79	3.31
2,3-Dichloroaniline	0.0731	0.0361
Fluoranthene	0.787	0.393
n-Octadecane	1.22	0.925
2,4,6-Trichlorophenol	0.155	0.106

[1] mg/L (ppm).

(2) The following in-plant limitations apply to metal-bearing wastewater containing cyanide:

IN-PLANT LIMITATIONS

Regulated parameter	Maximum daily [1]	Maximum monthly avg.[1]
Cyanide	500	178

[1] mg/L (ppm).

(c) Combined waste receipts from subparts A and B of this part. (1) As provided in § 437.46(a), and no later than December 22, 2003, any existing source subject to this paragraph must achieve the following pretreatment standards:

PRETREATMENT STANDARDS (PSES)

Regulated parameter	Maximum daily[1]	Maximum monthly avg.[1]
Metal Parameters		
Antimony	0.237	0.141

PRETREATMENT STANDARDS (PSES)—Continued

Regulated parameter	Maximum daily[1]	Maximum monthly avg.[1]
Arsenic	0.162	0.104
Barium	0.427	0.281
Cadmium	0.474	0.0962
Chromium	0.947	0.487
Cobalt	0.192	0.124
Copper	0.405	0.301
Lead	0.222	0.172
Mercury	0.00234	0.000739
Molybdenum	3.50	2.09
Nickel	3.95	1.45
Selenium	1.64	0.408
Silver	0.120	0.0351
Tin	0.409	0.120
Titanium	0.0947	0.0618
Vanadium	0.218	0.0662
Zinc	2.87	0.641
Organic Parameters		
Bis(2-ethylhexyl) phthalate	0.267	0.158
Carbazole	0.392	0.233
n-Decane	5.79	3.31
Fluoranthene	0.787	0.393
n-Octadecane	1.22	0.925

[1] mg/L (ppm).

(2) The following in-plant limitations apply to metal-bearing wastewater containing cyanide:

IN-PLANT LIMITATIONS

Regulated parameter	Maximum daily[1]	Maximum monthly avg.[1]
Cyanide	500	178

[1] mg/L (ppm).

(d) Combined waste receipts from subparts A and C of this part. (1) As provided in § 437.46(a), and no later than December 22, 2003, any existing source subject to this paragraph must achieve the following pretreatment standards:

PRETREATMENT STANDARDS (PSES)

Regulated parameter	Maximum daily [1]	Maximum monthly avg.[1]
Metal Parameters		
Antimony	0.249	0.206
Arsenic	0.162	0.104
Cadmium	0.474	0.0962
Chromium	15.5	3.07
Cobalt	0.192	0.124
Copper	4.14	1.06
Lead	1.32	0.283
Mercury	0.00234	0.000739
Molybdenum	1.01	0.965
Nickel	3.95	1.45
Selenium	1.64	0.408
Silver	0.120	0.0351
Tin	0.409	0.120
Titanium	0.0947	0.0618

PRETREATMENT STANDARDS (PSES)—Continued

Regulated parameter	Maximum daily [1]	Maximum monthly avg.[1]
Vanadium	0.218	0.0662
Zinc	2.87	0.641
Organic Parameters		
o-Cresol	1.92	0.561
p-Cresol	0.698	0.205
2,3-Dichloroaniline	0.0731	0.0361
2,4,6-Trichlorophenol	0.155	0.106

[1] mg/L (ppm).

(2) The following in-plant limitations apply to metal-bearing wastewater containing cyanide:

IN-PLANT LIMITATIONS

Regulated parameter	Maximum daily [1]	Maximum monthly avg.[1]
Cyanide	500	178

[1] mg/L (ppm).

(e) Combined waste receipts from subparts B and C of this part. As provided in § 437.46(a), and no later than December 22, 2003, any existing source subject to this paragraph must achieve the following pretreatment standards:

PRETREATMENT STANDARDS (PSES)

Regulated parameter	Maximum daily [1]	Maximum monthly avg.[1]
Metal Parameters		
Antimony	0.237	0.141
Barium	0.427	0.281
Chromium	0.947	0.487
Cobalt	56.4	18.8
Copper	0.405	0.301
Lead	0.222	0.172
Molybdenum	1.01	0.965
Tin	0.249	0.146
Zinc	6.95	4.46
Organic Parameters		
Bis (2-ethylhexyl) phthalate	0.267	0.158
Carbazole	0.392	0.233
o-Cresol	1.92	0.561
p-Cresol	0.698	0.205
n-Decane	5.79	3.31
2,3-Dichloroaniline	0.0731	0.0361
Fluoranthene	0.787	0.393
n-Octadecane	1.22	0.925
2,4,6-Trichlorophenol	0.155	0.106

[1] mg/L (ppm).

§ 437.47 Pretreatment standards for new sources (PSNS).

(a) Except as provided in 40 CFR 403.7 or 437.40(b), any new source subject to this subpart which combines treated or untreated wastes from subparts A, B, or C of this part may be subject to Multiple Wastestream Subcategory pretreatment standards representing the application of PSNS set forth in paragraphs (b), (c), (d), or (e) of this section if the discharger agrees to the following conditions in its permit:

(1) The discharger will meet the applicable Multiple Wastestream Subcategory standards set forth in paragraphs (b), (c), (d) or (e) of this section;

(2) The discharger will notify its local control authority at the time of submitting its application for an individual control mechanism or pretreatment agreement of its desire to be subject to Multiple Waste Subcategory by submitting to the local control authority an initial certification statement as described in § 437.41(a);

(3) The discharger will submit to its local control authority a periodic certification statements as described in § 437.41(b) once a year; and

(4) The discharger will maintain at the office of the facility and make available for inspection the on-site compliance paperwork as described in § 437.41(c).

(b) Combined waste receipts from subparts A, B and C of this part. (1) As provided in § 437.47(a), any new source subject to this paragraph must achieve the following pretreatment standards:

PRETREATMENT STANDARDS (PSNS)

Regulated parameter	Maximum daily [1]	Maximum monthly avg.[1]
Metal Parameters		
Antimony	0.237	0.141
Arsenic	0.162	0.104
Barium	0.427	0.281
Cadmium	0.474	0.0962
Chromium	0.746	0.323
Cobalt	0.192	0.124
Copper	0.500	0.242
Lead	0.350	0.160
Mercury	0.00234	0.000739
Molybdenum	1.01	0.965
Nickel	3.95	1.45
Selenium	1.64	0.408
Silver	0.120	0.0351
Tin	0.409	0.120
Titanium	0.0947	0.0618
Vanadium	0.218	0.0662
Zinc	2.87	0.641
Organic Parameters		
Bis(2-ethylhexyl) phthalate	0.215	0.101

PRETREATMENT STANDARDS (PSNS)—Continued

Regulated parameter	Maximum daily [1]	Maximum monthly avg.[1]
Carbazole	0.598	0.276
o-Cresol	1.92	0.561
p-Cresol	0.698	0.205
n-Decane	0.948	0.437
2,3-Dichloroaniline	0.0731	0.0361
Fluoranthene	0.0537	0.0268
n-Octadecane	0.589	0.302
2,4,6-Trichlorophenol	0.155	0.106

[1] mg/L (ppm).

(2) The following in-plant limitations apply to metal-bearing wastewater containing cyanide:

IN-PLANT LIMITATIONS

Regulated parameter	Maximum daily [1]	Maximum monthly avg.[1]
Cyanide	500	178

[1] mg/L (ppm).

(c) Combined waste receipts from subparts A and B of this part. (1) As provided in § 437.47(a), any new source subject to this paragraph must achieve the following pretreatment standards:

PRETREATMENT STANDARDS (PSNS)

Regulated parameter	Maximum daily [1]	Maximum monthly avg.[1]
Metal Paratmeters		
Antimony	0.237	0.141
Arsenic	0.162	0.104
Barium	0.427	0.281
Cadmium	0.474	0.0962
Chromium	0.746	0.323
Cobalt	0.192	0.124
Copper	0.500	0.242
Lead	0.350	0.160
Mercury	0.00234	0.000739
Molybdenum	3.50	2.09
Nickel	3.95	1.45
Selenium	1.64	0.408
Silver	0.120	0.0351
Tin	0.409	0.120
Titanium	0.0947	0.0618
Vanadium	0.218	0.0662
Zinc	2.87	0.641
Organic Parameters		
Bis (2-ethylhexyl) phthalate	0.215	0.101
Carbazole	0.598	0.276
n-Decane	0.948	0.437
Fluoranthene	0.0537	0.0268
n-Octadecane	0.589	0.302

[1] mg/L (ppm).

(2) The following in-plant limitations apply to metal-bearing wastewater containing cyanide:

IN-PLANT LIMITATIONS

Regulated parameter	Maximum daily [1]	Maximum monthly avg.[1]
Cyanide	500	178

[1] mg/L (ppm).

(d) Combined waste receipts from subparts A and C of this part. (1) As provided in § 437.47(a), any new source subject to this paragraph must achieve the following pretreatment standards:

PRETREATMENT STANDARDS (PSNS)

Regulated parameter	Maximum daily [1]	Maximum monthly avg.[1]
Metal Parameters		
Antimony	0.249	0.206
Arsenic	0.162	0.104
Cadmium	0.474	0.0962
Chromium	15.5	3.07
Cobalt	0.192	0.124
Copper	4.14	1.06
Lead	1.32	0.283
Mercury	0.00234	0.000739
Molybdenum	1.01	0.965
Nickel	3.95	1.45
Selenium	1.64	0.408
Silver	0.120	0.0351
Tin	0.409	0.120
Titanium	0.0947	0.0618
Vanadium	0.218	0.0662
Zinc	2.87	0.641
Organic Parameters		
o-Cresol	1.92	0.561
p-Cresol	0.698	0.205
2,3-Dichloroaniline	0.0731	0.0361
2,4,6-Trichlorophenol	0.155	0.106

[1] mg/L (ppm).

(2) The following in-plant limitations apply to metal-bearing wastewater containing cyanide:

IN-PLANT LIMITATIONS

Regulated parameter	Maximum daily [1]	Maximum monthly avg.[1]
Cyanide	500	178

[1] mg/L (ppm).

(e) Combined waste receipts from subparts B and C of this part. As provided in § 437.47(a), any new source subject to this paragraph must achieve the following pretreatment standards:

PRETREATMENT STANDARDS (PSNS)

Regulated parameter	Maximum daily [1]	Maximum monthly avg.[1]
Metal Parameters		
Antimony	0.237	0.141
Barium	0.427	0.281
Chromium	0.746	0.323
Cobalt	56.4	18.8
Copper	0.500	0.242
Lead	0.350	0.160
Molybdenum	1.01	0.965
Tin	0.335	0.165
Zinc	8.26	4.50
Organic Parameters		
Bis(2-ethylhexyl) phthalate	0.215	0.101
Carbazole	0.598	0.276
o-Cresol	1.92	0.561
p-Cresol	0.698	0.205
n-Decane	0.948	0.437
2,3-Dichloroaniline	0.0731	0.0361
Fluoranthene	0.0537	0.0268
n-Octadecane	0.589	0.302
2,4,6-Trichlorophenol	0.155	0.106

[1] mg/L (ppm).

PART 439—PHARMACEUTICAL MANUFACTURING POINT SOURCE CATEGORY

GENERAL

Sec.
439.0 Applicability.
439.1 General definitions.
439.2 Monitoring requirements.
439.3 General pretreatment standards.
439.4 Monitoring requirements.

Subpart A—Fermentation Products Subcategory

439.10 Applicability.
439.11 Specialized definitions.
439.12 Effluent limitations attainable by the application of the best practicable control technology currently available (BPT).
439.13 Effluent limitations attainable by the application of the best conventional pollutant control technology (BCT).
439.14 Effluent limitations attainable by the application of best available technology economically achievable (BAT).
439.15 Standards of performance for new (point) sources (NSPS).
439.16 Pretreatment standards for existing sources (PSES).
439.17 Pretreatment standards for new sources (PSNS).

Subpart B—Extraction Products Subcategory

439.20 Applicability.
439.21 Specialized definitions.
439.22 Effluent limitations attainable by the application of the best practicable control technology currently available (BPT).
439.23 Effluent limitations attainable by the application of the best conventional pollutant control technology (BCT).
439.24 Effluent limitations attainable by the application of best available technology economically achievable (BAT).
439.25 Standards of performance for new (point) sources (NSPS).
439.26 Pretreatment standards for existing sources (PSES).
439.27 Pretreatment standards for new sources (PSNS).

Subpart C—Chemical Synthesis Products Subcategory

439.30 Applicability.
439.31 Specialized definitions.
439.32 Effluent limitations attainable by the application of the best practicable control technology currently available (BPT).
439.33 Effluent limitations attainable by the application of the best conventional pollutant control technology (BCT).
439.34 Effluent limitations attainable by the application of best available technology economically achievable (BAT).
439.35 Standards of performance for new (point) sources (NSPS).
439.36 Pretreatment standards for existing sources (PSES).
439.37 Pretreatment standards for new sources (PSNS).

Subpart D—Mixing/Compounding and Formulation Subcategory

439.40 Applicability.
439.41 Specialized definitions.
439.42 Effluent limitations attainable by the application of the best practicable control technology currently available (BPT).
439.43 Effluent limitations attainable by the application of the best conventional pollutant control technology (BCT).
439.44 Effluent limitations attainable by the application of best available technology economically achievable (BAT).
439.45 Standards of performance for new (point) sources (NSPS).
439.46 Pretreatment standards for existing sources (PSES).
439.47 Pretreatment standards for new sources (PSNS).

Subpart E—Research Subcategory

439.50 Applicability.
439.51 Specialized definitions.

439.52 Effluent limitations attainable by the application of the best practicable control technology currently available (BPT).

APPENDIX A TO PART 439—TABLES

AUTHORITY: Secs. 301, 304, 306, 307, 308, 402 and 501 of the Clean Water Act, as amended; 33 U.S.C. 1311, 1314, 1316, 1317, 1318, 1342 and 1361.

SOURCE: 48 FR 49821, Oct. 27, 1983, unless otherwise noted.

GENERAL

§ 439.0 Applicability.

(a) This part applies to process wastewater discharges resulting from the research and manufacture of pharmaceutical products, which are generally, but not exclusively, reported under SIC 2833, SIC 2834 and SIC 2836 (1987 Standard Industrial Classification Manual).

(b) Although not reported under SIC 2833, SIC 2834 and SIC 2836, discharges from the manufacture of other pharmaceutical products to which this part applies include (but are not limited to):

(1) Products manufactured by one or more of the four types of manufacturing processes described in subcategories A, B, C or D of this part, and considered by the Food and Drug Administration to be pharmaceutical active ingredients;

(2) Multiple end-use products (e.g., components of formulations, chemical intermediates, or final products) derived from pharmaceutical manufacturing operations and intended for use primarily in pharmaceutical applications;

(3) Pharmaceutical products and intermediates not subject to other categorical limitations and standards, provided the manufacturing processes generate process wastewaters that are similar to those derived from the manufacture of pharmaceutical products elsewhere (an example of such a product is citric acid);

(4) Cosmetic preparations that are reported under SIC 2844 and contain pharmaceutical active ingredients, or active ingredients that are intended for the treatment of a skin condition. (These preparations do not include products such as lipsticks or perfumes that serve to enhance appearance, or provide a pleasing odor, but do not enhance skin care. Also excluded are deodorants, manicure preparations, shaving preparations and non-medicated shampoos that do not function primarily as a skin treatment.)

(c) The provisions of this part do not apply to wastewater discharges resulting from the manufacture of the following products, or as a result of providing one or more of the following services:

(1) Surgical and medical instruments and apparatus reported under SIC 3841;

(2) Orthopedic, prosthetic, and surgical appliances and supplies reported under SIC 3842;

(3) Dental equipment and supplies reported under SIC 3843;

(4) Medical laboratory services reported under SIC 8071;

(5) Dental laboratory services reported under SIC 8072;

(6) Outpatient care facility services reported under SIC 8081;

(7) Health and allied services reported under SIC 8091, and not classified elsewhere;

(8) Diagnostic devices other than those reported under SIC 3841;

(9) Animal feed products that include pharmaceutical active ingredients such as vitamins and antibiotics, where the major portion of the product is non-pharmaceutical, and the resulting process wastewater is not characteristic of process wastewater from the manufacture of pharmaceutical products;

(10) Food and beverage products fortified with vitamins or other pharmaceutical active ingredients, where the major portion of the product is non-pharmaceutical, and the resulting process wastewater is not characteristic of process wastewater from the manufacture of pharmaceutical products;

(11) Pharmaceutical products and intermediates subject to the provisions of 40 CFR part 414, provided their manufacture results in less than 50 percent of the total flow of process wastewater that is regulated by 40 CFR part 414 at the facility.

[63 FR 50424, Sept. 21, 1998]

§ 439.1 General definitions.

As used in this part:

(a) The general definitions, abbreviations and methods of analysis in 40 CFR part 401 shall apply.

(b) The term *bench-scale operation* means the laboratory testing of materials, methods, or processes on a small scale, such as on a laboratory worktable.

(c) The term *cyanide (T)* means the parameter total cyanide.

(d) The term *in-plant monitoring point* means a location within a plant, where an individual process effluent can be exclusively monitored before it is diluted or mixed with other process wastewaters enroute to the end-of-pipe.

(e) The term *minimum level* means the level at which an analytical system gives recognizable signals and an acceptable calibration point.

(f) The term *nitrification capability* means the capability of a POTW treatment system to oxidize ammonia or ammonium salts initially to nitrites (via *Nitrosomonas* bacteria) and subsequently to nitrates (via *Nitrobacter* bacteria). Criteria for determining the nitrification capability of a POTW treatment system are: bioassays confirming the presence of nitrifying bacteria; and analyses of the nitrogen balance demonstrating a reduction in the concentration of ammonia or ammonium salts and an increase in the concentrations of nitrites and nitrates.

(g) The term *non-detect (ND)* means a concentration value below the minimum level that can be reliably measured by the analytical method.

(h) The term *pilot-scale operation* means processing equipment being operated at an intermediate stage between laboratory-scale and full-scale operation for the purpose of developing a new product or manufacturing process.

(i) The term *POTW* means publicly owned treatment works (40 CFR 403.3).

(j) The term *process wastewater*, as defined at 40 CFR 122.2 and for the purposes of this part, does not include the following:

(1) Trimethyl silanol, any active anti-microbial materials, process wastewater from imperfect fermentation batches, and process area spills. Discharges containing such materials are not subject to the limitations and standards of this part.

(2) Non-contact cooling water, utility wastewaters, general site surface runoff, groundwater (e.g., contaminated groundwaters from on-site or off-site groundwater remediation projects), and other non-process water generated on site. Discharges of such waters and wastewaters are not subject to the limitations and standards of this part.

(k) The term *non-conventional pollutants* means parameters that are neither conventional pollutants (40 CFR 401.16), nor ''toxic'' pollutants (40 CFR 401.15).

(l) The term *surrogate pollutant* means a regulated parameter that, for the purpose of compliance monitoring, is allowed to serve as a surrogate for a group of specific regulated parameters. Plants would be allowed to monitor for a surrogate pollutant(s), when the other parameters for which it stands are receiving the same degree of treatment as the surrogate pollutant(s) and all of the parameters discharged are in the same treatability class(es) as their respective surrogate pollutant(s). Treatability classes have been identified in Appendix A to this part for both steam stripping and biological treatment technologies, which are the respective technology bases for PSES/PSNS and BAT/NSPS limitations controlling the discharge of regulated organic parameters.

(m) The term *xylenes* means a combination of the three isomers: o-xylene, p-xylene, and m-xylene.

(n) The abbreviation Mg/L means milligrams per liter or parts per million (ppm).

[63 FR 50425, Sept. 21, 1998; 64 FR 48104, Sept. 2, 1999]

§ 439.2 Monitoring requirements.

Unless otherwise noted, self-monitoring will be conducted at the final effluent discharge point.

§ 439.3 General pretreatment standards.

Any source subject to this part that introduces process wastewater pollutants into a publicly owned treatment works (POTW) must comply with 40 CFR part 403.

[63 FR 50425, Sept. 21, 1998]

§ 439.4 Monitoring requirements.

Permit limits and compliance monitoring are required for each regulated pollutant generated or used at a pharmaceutical manufacturing facility, except where the regulated pollutant is monitored as a surrogate parameter. Permit limits and compliance monitoring are not required for regulated pollutants that are neither used nor generated at the facility. Except for cyanide, for which an alternate monitoring requirement is established in subparts A and C of this part a determination that regulated pollutants are neither used nor generated should be based on a review of all raw materials in use, and an assessment of the process chemistry, products and by-products resulting from each of the manufacturing processes. This determination along with recommendation of any surrogate must be submitted with permit applications for approval by the permitting authority, and reconfirmed by an annual chemical analysis of wastewater from each monitoring location, and the measurement of a non-detect value for each regulated pollutant or its surrogate. Permits shall specify that such determinations will be maintained in the facility's permit records with their discharge monitoring reports and will be available to regulatory authorities upon request.

[63 FR 50425, Sept. 21, 1998]

Subpart A—Fermentation Products Subcategory

§ 439.10 Applicability.

This subpart applies to discharges of process wastewater resulting from the manufacture of pharmaceutical products by fermentation.

[63 FR 50426, Sept. 21, 1998]

§ 439.11 Specialized definitions.

For the purpose of this subpart:

(a) The term *fermentation* means process operations that utilize a chemical change induced by a living organism or enzyme, specifically, bacteria, or the microorganisms occurring in unicellular plants such as yeast, molds, or fungi to produce a specified product.

(b) The term *product* means pharmaceutical products derived from fermentation processes.

[63 FR 50426, Sept. 21, 1998]

§ 439.12 Effluent limitations attainable by the application of the best practicable control technology currently available (BPT).

Except as provided in 40 CFR 125.30 through 125.32, any existing point source subject to this subpart must achieve the following effluent limitations representing the application of BPT:

(a) The average monthly effluent limitation for BOD_5, expressed as mass loading (pounds, kilograms) per day, must reflect not less than 90 percent reduction in the long-term average daily BOD_5 load of the raw (untreated) process wastewater, multiplied by a variability factor of 3.0.

(1) The long-term average daily BOD_5 load of the raw process wastewater (i.e., the base number to which the percent reduction is applied) is defined as the average daily BOD_5 load during any calendar month, over 12 consecutive months within the most recent 36 months, and must include one or more periods during which production was at a maximum.

(2) To assure equity in the determination of NPDES permit limitations regulating discharges subject to this subpart, calculation of the long-term average daily BOD_5 load in the influent to the wastewater treatment system must exclude any portion of the load associated with separable mycelia and solvents, except for residual amounts of mycelia and solvents remaining after the practices of recovery and/or separate disposal or reuse. These residual amounts may be included in the calculation of the average influent BOD_5 loading.

(3) The practices of recovery, and/or separate disposal or reuse include: physical separation and removal of separable mycelia; recovery of solvents from waste streams; incineration of concentrated solvent wastestreams (including tar still bottoms); and concentration of broth for disposal other than to the treatment system. This part does not prohibit the inclusion of such wastes in raw waste loads in fact,

nor does it mandate any specific practice, but rather describes the rationale for determining NPDES permit limitations. The effluent limitation for BOD_5 may be achieved by any of several, or a combination, of these practices.

(b) The average monthly effluent limitation for TSS, expressed as mass loading (pounds, kilograms) per day, must be calculated as 1.7 times the BOD_5 limitation determined in paragraph (a) of this section.

(c) Except as provided in paragraph (d) of this section, the effluent limitations for COD and pH are as follows:

Regulated parameter	Effluent limitation [1]	
	Maximum daily discharge	Average monthly discharge must not exceed
COD	1675	856
pH	([2])	([2])

[1] Mg/L (ppm).
[2] Within the range 6.0 to 9.0.

(d) If the average monthly COD concentrations in paragraph (c) of this section are higher than concentration values reflecting a reduction in the long-term average daily COD load in the raw (untreated) process wastewater of 74 percent multiplied by a variability factor of 2.2, then the average monthly effluent limitations for COD corresponding to the lower concentration values must be applied.

(e) The effluent limitations for cyanide are as follows:

Regulated parameter	Effluent limitation [1]	
	Maximum daily discharge	Average monthly discharge must not exceed
Cyanide (T)	33.5	9.4

[1] Mg/L (ppm).

(f) When monitoring for cyanide at the end-of-pipe is impractical because of dilution by other process wastewaters, compliance with the cyanide effluent limitations in paragraph (e) of this section must be demonstrated at in-plant monitoring points pursuant to 40 CFR 122.44(i) and 122.45(h). Under the same provisions, the permitting authority may impose monitoring requirements on internal wastestreams for any other parameter(s) regulated by this section.

(g) Compliance with the limitation in paragraph (e) or (f) of this section may be achieved by certifying to the permit issuing authority that the facility's manufacturing processes neither use nor generate cyanide.

[63 FR 50426, Sept. 21, 1998]

§ 439.13 Effluent limitations attainable by the application of the best conventional pollutant control technology (BCT).

Except as provided in 40 CFR 125.30 through 125.32, any existing point source subject to this subpart must achieve the following effluent limitations representing the application of BCT: Limitations for BOD_5, TSS and pH are the same as the corresponding limitations in § 439.12.

[63 FR 50426, Sept. 21, 1998]

§ 439.14 Effluent limitations attainable by the application of best available technology economically achievable (BAT).

Except as provided in 40 CFR 125.30 through 125.32, any existing point source subject to this subpart must achieve the following effluent limitations representing the application of BAT:

Regulated parameter	Effluent limitations [1]	
	Maximum daily discharge	Average monthly discharge must not exceed
1 Ammonia (as N)	84.1	29.4
2 Acetone	0.5	0.2
3 4-Methyl-2-pentanone (MIBK)	0.5	0.2
4 Isobutyraldehyde	1.2	0.5
5 n-Amyl acetate	1.3	0.5
6 n-Butyl acetate	1.3	0.5
7 Ethyl acetate	1.3	0.5
8 Isopropyl acetate	1.3	0.5
9 Methyl formate	1.3	0.5
10 Amyl alcohol	10.0	4.1
11 Ethanol	10.0	4.1

Regulated parameter	Effluent limitations [1]	
	Maximum daily discharge	Average monthly discharge must not exceed
12 Isopropanol	3.9	1.6
13 Methanol	10.0	4.1
14 Methyl Cellosolve	100.0	40.6
15 Dimethyl Sulfoxide	91.5	37.5
16 Triethyl Amine	250.0	102.0
17 Phenol	0.05	0.02
18 Benzene	0.05	0.02
19 Toluene	0.06	0.02
20 Xylenes	0.03	0.01
21 n-Hexane	0.03	0.02
22 n-Heptane	0.05	0.02
23 Methylene chloride	0.9	0.3
24 Chloroform	0.02	0.013
25 1,2-Dichloroethane	0.4	0.1
26 Chlorobenzene	0.15	0.06
27 o-Dichlorobenzene	0.15	0.06
28 Tetrahydrofuran	8.4	2.6
29 Isopropyl ether	8.4	2.6
30 Diethyl amine	250.0	102.0
31 Acetonitrile	25.0	10.2
32 pH	([2])	([2])

[1] Mg/L (ppm).
[2] Within the range of 6.0–9.0.

(a) The effluent limitations for COD are the same as the corresponding limitations in § 439.12(c) and (d).

(b) The effluent limitations for cyanide are as follows:

Regulated parameter	Effluent limitation [1]	
	Maximum daily discharge	Average monthly discharge must not exceed
Cyanide (T)	33.5	9.4

[1] Mg/L (ppm).

(c) When monitoring for cyanide at the end-of-pipe is impractical because of dilution by other process wastewaters, compliance with the cyanide effluent limitations in paragraph (b) of this section must be demonstrated at in-plant monitoring points pursuant to 40 CFR 122.44(i) and 122.45(h). Under the same provisions, the permitting authority may impose monitoring requirements on internal wastestreams for any other parameter(s) regulated by this section.

(d) Compliance with the limitation in paragraph (b) or (c) of this section may be achieved by certifying to the permit issuing authority that a facility's manufacturing processes neither use nor generate cyanide.

[63 FR 50426, Sept. 21, 1998; 64 FR 10392, Mar. 4, 1999]

§ 439.15 Standards of performance for new (point) sources (NSPS).

Any new source subject to this subpart must achieve the following performance standards:

Regulated parameter	Effluent limitations [1]	
	Maximum daily discharge	Average monthly discharge must not exceed
1 BOD_5	267	111
2 TSS	472	166
3 COD	1675	856
4 Ammonia (as N)	84.1	29.4
5 Acetone	0.5	0.2
6 4-Methyl-2-pentanone (MIBK)	0.5	0.2
7 Isobutyraldehyde	1.2	0.5
8 n-Amyl acetate	1.3	0.5
9 n-Butyl acetate	1.3	0.5
10 Ethyl acetate	1.3	0.5
11 Isopropyl acetate	1.3	0.5
12 Methyl formate	1.3	0.5

Regulated parameter	Effluent limitations [1]	
	Maximum daily discharge	Average monthly discharge must not exceed
13 Amyl alcohol	10.0	4.1
14 Ethanol	10.0	4.1
15 Isopropanol	3.9	1.6
16 Methanol	10.0	4.1
17 Methyl Cellosolve	100.0	40.6
18 Dimethyl Sulfoxide	91.5	37.5
19 Triethyl Amine	250.0	102.0
20 Phenol	0.05	0.02
21 Benzene	0.05	0.02
22 Toluene	0.06	0.02
23 Xylenes	0.03	0.01
24 n-Hexane	0.03	0.02
25 n-Heptane	0.05	0.02
26 Methylene chloride	0.9	0.3
27 Chloroform	0.02	0.013
28 1,2-Dichloroethane	0.4	0.1
29 Chlorobenzene	0.15	0.06
30 o-Dichlorobenzene	0.15	0.06
31 Tetrahydrofuran	8.4	2.6
32 Isopropyl ether	8.4	2.6
33 Diethyl amine	250.0	102.0
34 Acetonitrile	25.0	10.2
35 pH	(2)	(2)

[1] Mg/L (ppm).
[2] Within the range of 6.0—9.0.

(a) The performance standards for cyanide are as follows:

Regulated parameter	Performance standards [1]	
	Maximum daily discharge	Average monthly discharge must not exceed
Cyanide (T)	33.5	9.4

[1] Mg/L (ppm).

(b) When monitoring for cyanide at the end-of-pipe is impractical because of dilution by other process wastewaters, compliance with the cyanide performance standards in paragraph (a) of this section must be demonstrated at in-plant monitoring points pursuant to 40 CFR 122.44(i) and 122.45(h). Under the same provisions, the permitting authority may impose monitoring requirements on internal wastestreams for any other parameter(s) regulated by this section.

(c) Any new source subject to the provisions of this section that commenced discharging after November 21, 1988 and prior to November 20, 1998 must continue to achieve the standards specified in the earlier version of this section until the expiration of the applicable time period specified in 40 CFR 122.29(d)(1), after which the source must achieve the standards specified in §§ 439.13 and 439.14.

(d) Compliance with the standard in paragraph (a) or (b) of this section may be achieved by certifying to the permit issuing authority that the facility's manufacturing processes neither use nor generate cyanide.

[63 FR 50427, Sept. 21, 1998; 64 FR 10392, Mar. 4, 1999]

§ 439.16 Pretreatment standards for existing sources (PSES).

Except as provided in 40 CFR 403.7 and 403.13, any existing source subject to this subpart must continue to achieve compliance with cyanide pretreatment standards and achieve compliance with all the other pretreatment standards by September 21, 2001.

Regulated parameter	Pretreatment standards[1]	
	Maximum daily discharge	Average monthly discharge must not exceed
1 Ammonia (as N)[2]	84.1	29.4
2 Acetone	20.7	8.2
3 4-Methyl-2-pentanone (MIBK)	20.7	8.2
4 Isobutyraldehyde	20.7	8.2
5 n-Amyl acetate	20.7	8.2
6 n-Butyl acetate	20.7	8.2
7 Ethyl acetate	20.7	8.2
8 Isopropyl acetate	20.7	8.2
9 Methyl formate	20.7	8.2
10 Methyl Cellosolve	275.0	59.7
11 Isopropyl ether	20.7	8.2
12 Tetrahydrofuran	9.2	3.4
13 Benzene	3.0	0.7
14 Toluene	0.3	0.2
15 Xylenes	3.0	0.7
16 n-Hexane	3.0	0.7
17 n-Heptane	3.0	0.7
18 Methylene chloride	3.0	0.7
19 Chloroform	0.1	0.03
20 1,2-Dichloroethane	20.7	8.2
21 Chlorobenzene	3.0	0.7
22 o-Dichlorobenzene	20.7	8.2
23 Diethyl amine	255.0	100.0
24 Triethyl amine	255.0	100.0

[1] Mg/L (ppm).
[2] Not applicable to sources that discharge to a POTW with nitrification capability.

(a) Sources that discharge to a POTW with nitrification capability (defined at § 439.2(f)) are not required to achieve the pretreatment standard for ammonia.

(b) The pretreatment standards for cyanide are as follows:

Regulated parameter	Pretreatment standards[1]	
	Maximum daily discharge	Average monthly discharge must not exceed
Cyanide (T)	33.5	9.4

[1] Mg/L (ppm).

(c) When monitoring for cyanide at the end-of-pipe is impractical because of dilution by other process wastewaters, compliance with the cyanide standards in paragraph (b) of this section must be demonstrated at in-plant monitoring points pursuant to 40 CFR 403.6(e)(2) and (4). Under the same provisions, the permitting authority may impose monitoring requirements on internal wastestreams for any other parameter(s) regulated by this section.

(d) Compliance with the limitation in paragraph (b) or (c) of this section may be achieved by certifying to the permit issuing authority that the facility's manufacturing processes neither use nor generate cyanide.

[63 FR 50428, Sept. 21, 1998; 64 FR 10393, Mar. 4, 1999]

§ 439.17 Pretreatment standards for new sources (PSNS).

Except as provided in 40 CFR 403.7, any new source subject to this subpart must achieve the following pretreatment standards:

Regulated parameter	Pretreatment standards[1]	
	Maximum daily discharge	Average monthly discharge must not exceed
1 Ammonia (as N)[2]	84.1	29.4
2 Acetone	20.7	8.2
3 4-Methyl-2-pentanone (MIBK)	20.7	8.2
4 Isobutyraldehyde	20.7	8.2
5 n-Amyl acetate	20.7	8.2

	Regulated parameter	Pretreatment standards[1]	
		Maximum daily discharge	Average monthly discharge must not exceed
6	n-Butyl acetate	20.7	8.2
7	Ethyl acetate	20.7	8.2
8	Isopropyl acetate	20.7	8.2
9	Methyl formate	20.7	8.2
10	Methyl Cellosolve	275.0	59.7
11	Isopropyl ether	20.7	8.2
12	Tetrahydrofuran	9.2	3.4
13	Benzene	3.0	0.7
14	Toluene	0.3	0.2
15	Xylenes	3.0	0.7
16	n-Hexane	3.0	0.7
17	n-Heptane	3.0	0.7
18	Methylene chloride	3.0	0.7
19	Chloroform	0.1	0.03
20	1,2-Dichloroethane	20.7	8.2
21	Chlorobenzene	3.0	0.7
22	o-Dichlorobenzene	20.7	8.2
23	Diethyl amine	255.0	100.0
24	Triethyl amine	255.0	100.0

[1] Mg/L (ppm)
[2] Not applicable to sources that discharge to a POTW with nitrification capability.

(a) Sources that discharge to a POTW with nitrification capability (defined at § 439.2(f))are not required to achieve the pretreatment standard for ammonia.

(b) The pretreatment standards for cyanide are as follows:

Regulated parameter	Pretreatment standards[1]	
	Maximum daily discharge	Average monthly discharge must not exceed
Cyanide (T)	33.5	9.4

[1] Mg/L (ppm).

(c) When monitoring for cyanide at the end-of-pipe is impractical because of dilution by other process wastewaters, compliance with the cyanide standards in § 439.17(b) must be demonstrated at in-plant monitoring points pursuant to 40 CFR 403.6(e)(2) and (4). Under the same provisions, the permitting authority may impose monitoring requirements on internal wastestreams for any other parameter(s) regulated by this section.

(d) Compliance with the standards in paragraph (b) or (c) of this section may be achieved by certifying to the permit issuing authority that a facility's manufacturing processes neither use nor generate cyanide.

[63 FR 50429, Sept. 21, 1998; 64 FR 10393, Mar. 4, 1999; 64 FR 48104, Sept. 2, 1999]

Subpart B—Extraction Products Subcategory

§ 439.20 Applicability.

This subpart applies to discharges of process wastewater resulting from the manufacture of pharmaceutical products by extraction.

[63 FR 50430, Sept. 21, 1998]

§ 439.21 Specialized definitions.

For the purpose of this subpart:

(a) The term *extraction* means process operations that derive pharmaceutically active ingredients from natural sources such as plant roots and leaves, animal glands, and parasitic fungi by chemical and physical extraction.

(b) The term *product* means any substance manufactured by an extraction process, including blood fractions, vaccines, serums, animal bile derivatives, endocrine products and medicinal products such as alkaloids that are isolated from botanical drugs and herbs.

[63 FR 50430, Sept. 21, 1998]

§ 439.22 Effluent limitations attainable by the application of the best practicable control technology currently available (BPT).

Except as provided in 40 CFR 125.30 through 125.32, any existing point source subject to this subpart must

achieve the following effluent limitations representing the application of BPT:

(a) The average monthly effluent limitation for BOD_5, expressed as mass loading (pounds, kilograms) per day, must reflect not less than 90 percent reduction in the long-term average daily BOD_5 load of the raw (untreated) process wastewater, multiplied by a variability factor of 3.0.

(1) The long-term average daily BOD_5 load of the raw process wastewater (i.e., the base number to which the percent reduction is applied) is defined as the average daily BOD_5 load during any calendar month, over 12 consecutive months within the most recent 36 months, and must include one or more periods during which production was at a maximum.

(2) To assure equity in the determination of NPDES permit limitations regulating discharges subject to this subpart, calculation of the long-term average daily BOD_5 load in the influent to the wastewater treatment system must exclude any portion of the load associated with separable mycelia and solvents, except for residual amounts of mycelia and solvents remaining after the practices of recovery and/or separate disposal or reuse. Residual amounts of these substances may be included in the calculation of the average influent BOD_5 loading.

(3) The practices of recovery, and/or separate disposal or reuse include: physical separation and removal of separable mycelia; recovery of solvents from wastestreams; incineration of concentrated solvent wastestreams (including tar still bottoms); and broth concentration for disposal other than to the treatment system. This part does not prohibit the inclusion of such wastes in raw waste loads in fact, nor does it mandate any specific practice, but rather describes the rationale for determining NPDES permit limitations. The effluent limitation for BOD_5 may be achieved by any of several, or a combination, of these practices.

(b) The average monthly effluent limitation for TSS, expressed as mass loading (pounds, kilograms) per day, must be calculated as 1.7 times the BOD_5 limitation determined in paragraph (a) of this section.

(c) Except as provided in paragraph (d) of this section, effluent limitations for COD and pH are as follows:

Regulated parameter	Effluent limitations [1]	
	Maximum daily discharge	Average monthly discharge must not exceed
COD	228	86
pH	(2)	(2)

[1] Mg/L (ppm).
[2] Within the range 6.0 to 9.0.

(d) If the average monthly COD concentrations in paragraph (c) of this section are higher than concentration values reflecting a reduction in the long-term average daily COD load in the raw (untreated) process wastewater of 74 percent multiplied by a variability factor of 2.2, then the average monthly effluent limitations for COD corresponding to the lower concentration values must be applied.

[63 FR 50430, Sept. 21, 1998]

§ 439.23 Effluent limitations attainable by the application of the best conventional pollutant control technology (BCT).

Except as provided in 40 CFR 125.30 through 125.32, any existing point source subject to this subpart must achieve the following effluent limitations representing the application of BCT: Limitations for BOD_5, TSS and pH are the same as the corresponding limitations in § 439.22.

[63 FR 50430, Sept. 21, 1998]

§ 439.24 Effluent limitations attainable by the application of best available technology economically achievable (BAT).

Except as provided in 40 CFR 125.30 through 125.32, any existing point source subject to this subpart must achieve the following effluent limitations representing the application of BAT: Limitations for COD are the same as the corresponding limitations in § 439.22(c) and (d).

[63 FR 50431, Sept. 21, 1998]

§ 439.25 Standards of performance for new (point) sources (NSPS).

Any new source subject to this subpart must achieve the following performance standards:

Regulated parameter	Performance standards[1]	
	Maximum daily discharge	Average monthly discharge must not exceed
BOD_5	35	18
TSS	58	31
COD	228	86
pH	([2])	([2])

[1] Mg/L (ppm).
[2] Within the range 6.0 to 9.0.

(b) Any new source subject to the provisions of this section that commenced discharging after November 21, 1988 and prior to November 20, 1998 must continue to achieve the standards specified in the earlier version of this section, until the expiration of the applicable time period specified in 40 CFR 122.29(d)(1), after which the source must achieve the standards specified in §§ 439.23 and 439.24.

[63 FR 50431, Sept. 21, 1998]

§ 439.26 Pretreatment standards for existing sources (PSES).

Except as provided in 40 CFR 403.7 and 403.13, any existing source subject to this subpart must achieve the following pretreatment standards by September 21, 2001:

Regulated parameter	Pretreatment standards[1]	
	Maximum daily discharge	Average monthly discharge must not exceed
1 Acetone	20.7	8.2
2 n-Amyl acetate	20.7	8.2
3 Ethyl acetate	20.7	8.2
4 Isopropyl acetate	20.7	8.2
5 Methylene chloride	3.0	0.7

[1] Mg/L (ppm).

[63 FR 50431, Sept. 21, 1998; 64 FR 10393, Mar. 4, 1999]

§ 439.27 Pretreatment standards for new sources (PSNS).

Except as provided in 40 CFR 403.7, any new source subject to this subpart must achieve the following pretreatment standards:

Regulated parameter	Pretreatment standards[1]	
	Maximum daily discharge	Average monthly discharge must not exceed
1 Acetone	20.7	8.2
2 n-Amyl acetate	20.7	8.2
3 Ethyl acetate	20.7	8.2
4 Isopropyl acetate	20.7	8.2
5 Methylene chloride	3.0	0.7

[1] Mg/L (ppm).

[63 FR 50431, Sept. 21, 1998; 64 FR 48104, Sept. 2, 1999]

Subpart C—Chemical Synthesis Products Subcategory

§ 439.30 Applicability.

This subpart applies to discharges of process wastewater resulting from the manufacture of pharmaceutical products by chemical synthesis.

[63 FR 50431, Sept. 21, 1998]

§ 439.31 Specialized definitions.

For the purpose of this subpart:

(a) The term *chemical synthesis* means using one or a series of chemical reactions in the manufacturing process of a specified product.

(b) The term *product* means any pharmaceutical product manufactured by chemical synthesis.

[63 FR 50431, Sept. 21, 1998]

§ 439.32 Effluent limitations attainable by the application of the best practicable control technology currently available (BPT).

Except as provided in 40 CFR 125.30 through 125.32, any existing point source subject to this subpart must achieve the following effluent limitations representing the application of BPT:

(a) The average monthly effluent limitation for BOD_5, expressed as mass loading (pounds, kilograms) per day, must reflect not less than 90 percent reduction in the long-term average daily BOD_5 load of the raw (untreated) process wastewater, multiplied by a variability factor of 3.0.

(1) The long-term average daily BOD_5 load of the raw process wastewater (i.e., the base number to which the percent reduction is applied) is defined as the average daily BOD_5 load during any calendar month, over 12 consecutive months within the most recent 36 months, and must include one or more periods during which production was at a maximum.

(2) To assure equity in the determination of NPDES permit limitations regulating discharges subject to this subpart, calculation of the long-term average daily BOD_5 load in the influent to the wastewater treatment system must exclude any portion of the load associated with separable mycelia and solvents, except for residual amounts of mycelia and solvents remaining after the practices of recovery and/or separate disposal or reuse. Residual amounts of these substances may be included in the calculation of the average influent BOD_5 loading.

(3) The practices of recovery, and/or separate disposal or reuse include: physical separation and removal of separable mycelia; recovery of solvents from wastestreams; incineration of concentrated solvent wastestreams (including tar still bottoms); and concentration of broth for disposal other than to the treatment system. This part does not prohibit the inclusion of such wastes in raw waste loads in fact, nor does it mandate any specific practice, but rather describes the rationale for determining NPDES permit limitations. The effluent limitation for BOD_5 may be achieved by any of several, or a combination, of these practices.

(b) The average monthly effluent limitation for TSS, expressed as mass loading (pounds, kilograms) per day, must be calculated as 1.7 times the BOD_5 limitation determined in paragraph (a) of this section.

(c) Except as provided in paragraph (d) of this section, the effluent limitations for COD and pH are as follows:

Regulated parameter	Effluent limitation [1]	
	Maximum daily discharge	Average monthly discharge must not exceed
COD	1675	856
pH	([2])	([2])

[1] Mg/L (ppm).

[2] Within the range 6.0 to 9.0.

(d) If the average monthly COD concentrations in paragraph (c) of this section are higher than concentration values reflecting a reduction in the long-term average daily COD load in the raw (untreated) process wastewater of 74 percent multiplied by a variability factor of 2.2, then the average monthly effluent limitations for COD corresponding to the lower concentration values must be applied.

(e) The effluent limitations for cyanide are as follows:

Regulated parameter	Effluent limitation [1]	
	Maximum daily discharge	Average monthly discharge must not exceed
Cyanide (T)	33.5	9.4

[1] Mg/L (ppm).

(f) When monitoring for cyanide at the end-of-pipe is impractical because of dilution by other process wastewaters, compliance with the cyanide effluent limitations in § 439.32(e) must be demonstrated at in-plant monitoring points pursuant to 40 CFR 122.44(i) and 122.45(h). Under the same provisions, the permitting authority may impose monitoring requirements on internal wastestreams for any other parameter(s) regulated by this section.

(g) Compliance with the limitation in paragraph (e) or (f) of this section may be achieved by certifying to the permit issuing authority that the facility's manufacturing processes neither use nor generate cyanide.

[63 FR 50431, Sept. 21, 1998]

§ 439.33 Effluent limitations attainable by the application of the best conventional pollutant control technology (BCT).

Except as provided in 40 CFR 125.30 through 125.32, any existing point source subject to this subpart must achieve the following effluent limitations representing the application of BCT: Limitations for BOD5, TSS and pH are the same as the corresponding limitations in § 439.32.

[63 FR 50432, Sept. 21, 1998]

§ 439.34 Effluent limitations attainable by the application of best available technology economically achievable (BAT).

Except as provided in 40 CFR 125.30 through 125.32, any existing point source subject to this subpart must achieve the following effluent limitations representing the application of BAT:

	Regulated parameter	Effluent limitations [1]	
		Maximum daily discharge	Average monthly discharge must not exceed
1	Ammonia (as N)	84.1	29.4
2	Acetone	0.5	0.2
3	4-Methyl-2-pentanone (MIBK)	0.5	0.2
4	Isobutyraldehyde	1.2	0.5
5	n-Amyl acetate	1.3	0.5
6	n-Butyl acetate	1.3	0.5
7	Ethyl acetate	1.3	0.5
8	Isopropyl acetate	1.3	0.5
9	Methyl formate	1.3	0.5
10	Amyl alcohol	10.0	4.1
11	Ethanol	10.0	4.1
12	Isopropanol	3.9	1.6
13	Methanol	10.0	4.1
14	Methyl Cellosolve	100.0	40.6
15	Dimethyl Sulfoxide	91.5	37.5
16	Triethyl amine	250.0	102.0
17	Phenol	0.05	0.02
18	Benzene	0.05	0.02
19	Toluene	0.06	0.02
20	Xylenes	0.03	0.01
21	n-Hexane	0.03	0.02
22	n-Heptane	0.05	0.02
23	Methylene chloride	0.9	0.3
24	Chloroform	0.02	0.013
25	1,2-Dichloroethane	0.4	0.1
26	Chlorobenzene	0.15	0.06
27	o-Dichlorobenzene	0.15	0.06
28	Tetrahydrofuran	8.4	2.6
29	Isopropyl ether	8.4	2.6
30	Diethyl amine	250.0	102.0
31	Acetonitrile	25.0	10.2
32	pH	([2])	([2])

[1] Mg/L (ppm).
[2] Within the range of 6.0–9.0.E.

(a) Effluent limitations for COD are the same as the corresponding limitations in § 439.32(c) and (d).

(b) The effluent limitations for cyanide are as follows:

Regulated parameter	Effluent limitations [1]	
	Maximum daily discharge	Average monthly discharge must not exceed
Cyanide (T)	33.5	9.4

[1] Mg/L (ppm).

(c) When monitoring for cyanide at the end-of-pipe is impractical because of dilution by other process wastewaters, compliance with the cyanide effluent limitations in paragraph (a) of this section must be demonstrated at in-plant monitoring points pursuant to 40 CFR 122.44(i) and 122.45(h). Under the same provisions, the permitting authority may impose monitoring requirements on internal wastestreams for any other parameter(s) regulated by this section.

(d) Compliance with the limitation in § 439.34(b) or (c) may be achieved by certifying to the permit issuing authority that a facility's manufacturing processes neither use nor generate cyanide.

[63 FR 50432, Sept 21, 1998; 64 FR 10393, Mar. 4, 1999]

§ 439.35 Standards of performance for new (point) sources (NSPS).

Any new source subject to this subpart must achieve the following performance standards:

	Regulated parameter	Effluent limitations [1]	
		Maximum daily discharge	Average monthly discharge must not exceed
1	BOD_5	267	111
2	TSS	472	166
3	COD	1675	856
4	Ammonia (as N)	84.1	29.4
5	Acetone	0.5	0.2
6	4-Methyl-2-pentanone (MIBK)	0.5	0.2
7	Isobutyraldehyde	1.2	0.5
8	n-Amyl acetate	1.3	0.5
9	n-Butyl acetate	1.3	0.5
10	Ethyl acetate	1.3	0.5
11	Isopropyl acetate	1.3	0.5
12	Methyl formate	1.3	0.5
13	Amyl alcohol	10.0	4.1
14	Ethanol	10.0	4.1
15	Isopropanol	3.9	1.6
16	Methanol	10.0	4.1
17	Methyl Cellosolve	100.0	40.6
18	Dimethyl Sulfoxide	91.5	37.5
19	Triethyl amine	250.0	102.0
20	Phenol	0.05	0.02
21	Benzene	0.05	0.02
22	Toluene	0.06	0.02
23	Xylenes	0.03	0.01
24	n-Hexane	0.03	0.02
25	n-Heptane	0.05	0.02
26	Methylene chloride	0.9	0.3
27	Chloroform	0.02	0.013
28	1,2-Dichloroethane	0.4	0.1
29	Chlorobenzene	0.15	0.06
30	o-Dichlorobenzene	0.15	0.06
31	Tetrahydrofuran	8.4	2.6
32	Isopropyl ether	8.4	2.6
33	Diethyl amine	250.0	102.0
34	Acetonitrile	25.0	10.2
35	pH	(2)	(2)

[1] Mg/L (ppm).
[2] Within the range of 6.0–9.0.

(a) The performance standards for cyanide are as follows:

Regulated parameter	Performance standards [1]	
	Maximum daily discharge	Average monthly discharge must not exceed
Cyanide (T)	33.5	9.4

[1] Mg/L (ppm).

(b) When monitoring for cyanide at the end-of-pipe is impractical because of dilution by other process wastewaters, compliance with the cyanide standards in paragraph (a) of this section must be demonstrated at in-plant monitoring points pursuant to 40 CFR 122.44(i) and 122.45(h). Under the same provisions, the permitting authority may impose monitoring requirements on internal wastestreams for any other parameter(s) regulated by this section.

(c) Any new source subject to the provisions of this section that commenced discharging after November 21, 1988 and prior to November 20, 1998 must continue to achieve the standards specified in the earlier version of this section until the expiration of the applicable time period specified in 40 CFR 122.29(d)(1), after which the source must achieve the standards specified in §§ 439.33 and 439.34.

(d) Compliance with the standards in paragraph (a) or (b) of this section may be achieved by certifying to the permit issuing authority that a facility's manufacturing processes neither use nor generate cyanide.

[63 FR 50433, Sept. 21, 1998; 64 FR 10393, Mar. 4, 1999]

§ 439.36 Pretreatment standards for existing sources (PSES).

Except as provided in 40 CFR 403.7 and 403.13, any existing source subject to this subpart must continue to achieve compliance with cyanide pretreatment standards and achieve compliance with all other pretreatment standards by September 21, 2001.

	Regulated parameter	Pretreatment standards [1]	
		Maximum daily discharge	Average monthly discharge must not exceed
1	Ammonia (as N) [2]	84.1	29.4
2	Acetone	20.7	8.2
3	4–Methyl-2-pentanone (MIBK)	20.7	8.2
4	Isobutyraldehyde	20.7	8.2
5	n-Amyl acetate	20.7	8.2
6	n-Butyl acetate	20.7	8.2
7	Ethyl acetate	20.7	8.2
8	Isopropyl acetate	20.7	8.2
9	Methyl formate	20.7	8.2
10	Methyl Cellosolve	275.0	59.7
11	Isopropyl ether	20.7	8.2
12	Tetrahydrofuran	9.2	3.4
13	Benzene	3.0	0.7
14	Toluene	0.3	0.2
15	Xylenes	3.0	0.7
16	n-Hexane	3.0	0.7
17	n-Heptane	3.0	0.7
18	Methylene chloride	3.0	0.7
19	Chloroform	0.1	0.03
20	1,2–Dichloroethane	20.7	8.2
21	Chlorobenzene	3.0	0.7
22	o-Dichlorobenzene	20.7	8.2
23	Diethyl amine	255.0	100.0
24	Triethyl amine	255.0	100.0

[1] Mg/L (ppm).
[2] Not applicable to sources that discharge to a POTW with nitrification capability.

(a) Sources that discharge to a POTW with nitrification capability (defined at § 439.2(f)) are not required to achieve the pretreatment standard for ammonia.

(b) The pretreatment standards for cyanide are as follows:

Regulated parameter	Pretreatment standards [1]	
	Maximum daily discharge	Average monthly discharge must not exceed
Cyanide (T)	33.5	9.4

[1] Mg/L (ppm).

(c) When monitoring for cyanide at the end-of-pipe is impractical because of dilution by other process wastewaters, compliance with the cyanide pretreatment standards in paragraph (b) of this section must be demonstrated at in-plant monitoring points pursuant to 40 CFR 403.6(e) (2) and (4). Under the same provisions, the permitting authority may impose monitoring requirements on internal wastestreams for any other parameter(s) regulated by this section.

(d) Compliance with the pretreatment standards in paragraph (b) or (c) of this section may be achieved by certifying to the permit issuing authority that the facility's manufacturing processes neither use nor generate cyanide.

[63 FR 50434, Sept. 21, 1998; 64 FR 10393, Mar. 4, 1999]

§ 439.37 Pretreatment standards for new sources (PSNS).

Except as provided in 40 CFR 403.7, any new source subject to this subpart

must achieve the following pretreatment standards:

	Regulated parameter	Pretreatment standards [1]	
		Maximum daily discharge	Average monthly discharge must not exceed
1	Ammonia (as N)[2]	84.1	29.4
2	Acetone	20.7	8.2
3	4-Methyl-2-pentanone (MIBK)	20.7	8.2
4	Isobutyraldehyde	20.7	8.2
5	n-Amyl acetate	20.7	8.2
6	n-Butyl acetate	20.7	8.2
7	Ethyl acetate	20.7	8.2
8	Isopropyl acetate	20.7	8.2
9	Methyl formate	20.7	8.2
10	Methyl Cellosolve	275.0	59.7
11	Isopropyl ether	20.7	8.2
12	Tetrahydrofuran	9.2	3.4
13	Benzene	3.0	0.7
14	Toluene	0.3	0.2
15	Xylenes	3.0	0.7
16	n-Hexane	3.0	0.7
17	n-Heptane	3.0	0.7
18	Methylene chloride	3.0	0.7
19	Chloroform	0.1	0.03
20	1,2-Dichloroethane	20.7	8.2
21	Chlorobenzene	3.0	0.7
22	o-Dichlorobenzene	20.7	8.2
23	Diethyl amine	255.0	100.0
24	Triethyl amine	255.0	100.0

[1] Mg/L (ppm).
[2] Not applicable to sources that discharge to a POTW with nitrification capability.

(a) Sources that discharge to a POTW with nitrification capability (defined at § 439.2(f)) are not required to achieve the pretreatment standard for ammonia.

(b) The pretreatment standards for cyanide are as follows:

Regulated parameter	Effluent limitation [1]	
	Maximum daily discharge	Average monthly discharge must not exceed
Cyanide (T)	33.5	9.4

[1] Mg/L (ppm).

(c) When monitoring for cyanide at the end-of-pipe is impractical because of dilution by other process wastewaters, compliance with the cyanide pretreatment standards in paragraph (b) of this section must be demonstrated at in-plant monitoring points pursuant to 40 CFR 403.6(e) (2) and (4). Under the same provisions, the permitting authority may impose monitoring requirements on internal wastestreams for any other parameter(s) regulated by this section.

(d) Compliance with the standard in paragraph (b) or (c) of this section may be achieved by certifying to the permit issuing authority that a facility's manufacturing processes neither use nor generate cyanide.

[63 FR 50434, Sept. 21, 1998; 64 FR 10393, Mar. 4, 1999; 64 FR 48104, Sept. 2, 1999]

Subpart D—Mixing/Compounding and Formulation Subcategory

§ 439.40 Applicability.

This subpart applies to discharges of process wastewater resulting from the manufacture of pharmaceutical products by mixing, compounding and formulating operations.

[63 FR 50435, Sept. 21, 1998]

§ 439.41 Specialized definitions.

For the purpose of this subpart:

(a) The term *mixing, compounding, and formulating operations* means processes that put pharmaceutical products in dosage forms.

(b) The term *product* means any pharmaceutical product manufactured by

blending, mixing, compounding, and formulating pharmaceutical ingredients. The term includes pharmaceutical preparations for both human and veterinary use, such as ampules, tablets, capsules, vials, ointments, medicinal powders, solutions, and suspensions.

[63 FR 50435, Sept. 21, 1998]

§ 439.42 Effluent limitations attainable by the application of the best practicable control technology currently available (BPT).

Except as provided in 40 CFR 125.30 through 125.32, any existing point source subject to this subpart must achieve the following effluent limitations representing the application of BPT:

(a) The average monthly effluent limitation for BOD_5, expressed as mass loading (pounds, kilograms) per day, must reflect not less than 90 percent reduction in the long-term average daily BOD_5 load of the raw (untreated) process wastewater, multiplied by a variability factor of 3.0.

(1) The long-term average daily BOD_5 load of the raw process wastewater (i.e., the base number to which the percent reduction is applied) is defined as the average daily BOD_5 load during any calendar month, over 12 consecutive months within the most recent 36 months, and must include one or more periods during which production was at a maximum.

(2) To assure equity in the determination of NPDES permit limitations regulating discharges subject to this subpart, calculation of the long-term average daily BOD_5 load in the influent to the wastewater treatment system must exclude any portion of the load associated with separable mycelia and solvents, except for residual amounts of mycelia and solvents remaining after the practices of recovery and/or separate disposal or reuse. Residual amounts of these substances may be included in the calculation of the average influent BOD_5 loading.

(3) The practices of recovery, and/or separate disposal or reuse include: physical separation and removal of separable mycelia; recovery of solvents from wastestreams; incineration of concentrated solvent wastestreams (including tar still bottoms); and broth concentration for disposal other than to the treatment system. This part does not prohibit the inclusion of such wastes in raw waste loads in fact, nor does it mandate any specific practice, but rather describes the rationale for determining NPDES permit limitations. The effluent limitation for BOD_5 may be achieved by any of several, or a combination, of these practices.

(b) The average monthly effluent limitation for TSS, expressed as mass loading (pounds, kilograms) per day, must be calculated as 1.7 times the BOD_5 limitation determined in paragraph (a) of this section.

(c) Except as provided in paragraph (d) of this section, effluent limitations for COD and pH are as follows:

Regulated parameter	Effluent limitations[1]	
	Maximum daily discharge	Average monthly discharge must not exceed
COD	228	86
pH	([2])	([2])

[1] Mg/L (ppm).
[2] Within the range 6.0 to 9.0.

(d) If the average monthly COD concentrations in paragraph (c) of this section are higher than concentration values reflecting a reduction in the long-term average daily COD load in the raw (untreated) process wastewater of 74 percent multiplied by a variability factor of 2.2, then the average monthly effluent limitations for COD corresponding to the lower concentration values must be applied.

[63 FR 50435, Sept. 21, 1998]

§ 439.43 Effluent limitations attainable by the application of the best conventional pollutant control technology (BCT).

Except as provided in 40 CFR 125.30 through 125.32, any existing point source subject to this subpart must achieve the following effluent limitations representing the application of BCT: Limitations for BOD_5, TSS and pH are the same as the corresponding limitations in § 439.42.

[63 FR 50436, Sept. 21, 1998]

§ 439.44 Effluent limitations attainable by the application of best available technology economically achievable (BAT).

Except as provided in 40 CFR 125.30 through 125.32, any existing point source subject to this subpart must achieve the following effluent limitations representing the application of BAT. Limitations for COD are the same as the corresponding limitations in § 439.42 (c) and (d).

[63 FR 50436, Sept. 21, 1998]

§ 439.45 Standards of performance for new (point) sources (NSPS).

(a) Any new source subject to this subpart must achieve the following performance standards:

Regulated parameter	Performance standards [1]	
	Maximum daily discharge	Average monthly discharge must not exceed
BOD_5	35	18
TSS	58	31
COD	228	86
pH	([2])	([2])

[1] Mg/L (ppm).
[2] Within the range 6.0 to 9.0.

(b) Any new source subject to the provisions of this section that commenced discharging after November 21, 1988 and prior to November 20, 1998 must continue to achieve the standards specified in the earlier version of this section until the expiration of the applicable time period specified in 40 CFR 122.29(d)(1), after which the source must achieve the standards specified in § 439.43 and 439.44.

[63 FR 50436, Sept. 21, 1998]

§ 439.46 Pretreatment standards for existing sources (PSES).

Except as provided in 40 CFR 403.7 and 403.13, any existing source subject to this subpart must achieve the following pretreatment standards by September 21, 2001:

Regulated parameter	Pretreatment standards [1]	
	Maximum daily discharge	Average monthly discharge must not exceed
1 Acetone	20.7	8.2
2 n-Amyl acetate	20.7	8.2
3 Ethyl acetate	20.7	8.2
4 Isopropyl acetate	20.7	8.2
5 Methylene chloride	3.0	0.7

[1] Mg/L (ppm).

[63 FR 50436, Sept. 21, 1998]

§ 439.47 Pretreatment standards for new sources (PSNS).

Except as provided in 40 CFR 403.7, any new source subject to this subpart must achieve the following pretreatment standards:

Regulated parameter	Pretreatment standards [1]	
	Maximum daily discharge	Average monthly discharge must not exceed
1 Acetone	20.7	8.2
2 n-Amyl acetate	20.7	8.2
3 Ethyl acetate	20.7	8.2
4 Isopropyl acetate	20.7	8.2
5 Methylene chloride	3.0	0.7

[1] Mg/L (ppm).

[63 FR 50436, Sept. 21, 1998; 64 FR 48104, Sept. 2, 1999]

Subpart E—Research Subcategory

§ 439.50 Applicability.

This subpart applies to discharges of process wastewater resulting from pharmaceutical research.

[63 FR 50436, Sept. 21, 1998]

§ 439.51 Specialized definitions.

For the purpose of this subpart, the term product means products or services resulting from research and product development activities.

[63 FR 50436, Sept. 21, 1998]

§ 439.52 Effluent limitations attainable by the application of the best practicable control technology currently available (BPT).

Except as provided in 40 CFR 125.30 through 125.32, any existing point source subject to this subpart must achieve the following effluent limitations representing the application of BPT:

(a) The average monthly effluent limitation for BOD_5, expressed as mass

loading (pounds, kilograms) per day, must reflect not less than 90 percent reduction in the long-term average daily BOD_5 load of the raw (untreated) process wastewater, multiplied by a variability factor of 3.0. No facility shall be required to attain a limitation for BOD_5 that is less than the equivalent of 45 mg/L.

(b) The average monthly effluent limitation for COD, expressed as mass loading (pounds, kilograms) per day, must reflect not less than 74 percent reduction in the long-term average daily COD load of the raw (untreated) process wastewater, multiplied by a variability factor of 2.2. No facility shall be required to attain a limitation for COD that is less than the equivalent of 220 mg/L.

(c) The long-term average daily BOD_5 or COD mass loading of the raw process wastewater (i.e., the base number to which the percent reduction is applied) is defined as the average daily BOD_5 or COD load during any calendar month, over 12 consecutive months within the most recent 36 months.

(1) To assure equity in the determination of NPDES permit limitations regulating discharges subject to this subpart, calculation of the long-term average daily BOD_5 or COD load in the influent to the wastewater treatment system must exclude any portion of the load associated with solvents, except for residual amounts of solvents remaining after the practices of recovery and/or separate disposal or reuse. Residual amounts of these substances may be included in the calculation of the average influent BOD_5 or COD loading.

(2) The practices of recovery, and/or separate disposal or reuse include: recovery of solvents from wastestreams; and incineration of concentrated solvent wastestreams (including tar still bottoms). This part does not prohibit the inclusion of such wastes in raw waste loads in fact, nor does it mandate any specific practice, but rather describes the rationale for determining NPDES permit limitations. The effluent limitation for BOD_5 or COD may be achieved by any of several, or a combination, of these practices.

(d) The average monthly effluent limitation for TSS, expressed as mass loading (pounds, kilograms) per day, must be calculated as 1.7 times the BOD_5 limitation determined in paragraph (a) of this section.

(e) The pH must be within the range 6.0 to 9.0.

[63 FR 50436, Sept. 21, 1998]

APPENDIX A TO PART 439—TABLES

TABLE 1—SURROGATE PARAMETERS FOR DIRECT DISCHARGERS

[Utilizing biological treatment technology]

Regulated parameters	Treatability class
Amyl alcohol	Alcohols.
Ethanol [1]	
Isopropanol [1]	
Methanol [1]	
Phenol	
Isobutyraldehyde [1]	Aldehydes.
n-Heptane [1]	Alkanes.
n-Hexane [1]	
Diethylamine [1]	Amines.
Triethylamine	
Benzene	Aromatics.
Toluene [1]	
Xylenes [1]	
Chlorobenzene	
o-Dichlorobenzene	
Chloroform [1]	Chlorinated Alkanes.
Methylene chloride [1]	
1,2-Dichloroethane [1]	
Ethyl acetate [1]	Esters.
Isopropyl acetate	
n-Amyl acetate	
n-Butyl acetate	
Methyl formate	
Tetrahydrofuran [1]	Ethers.
Isopropyl ether	

TABLE 1—SURROGATE PARAMETERS FOR DIRECT DISCHARGERS—Continued

[Utilizing biological treatment technology]

Regulated parameters	Treatability class
Acetone [1]	Ketones.
4-Methyl-2-pentanone (MIBK)	
Ammonia (aqueous)	Miscellaneous. [2]
Acetonitrile	
Methyl Cellosolve	
Dimethyl Sulfoxide	

[1] These parameters may be used as a surrogate to represent other parameters in the same treatability class.
[2] Surrogates have not been identified for the ''Miscellaneous'' treatability class.

TABLE 2—SURROGATE PARAMETERS FOR INDIRECT DISCHARGERS

[Utilizing steam stripping treatment technology]

Regulated parameters	Treatability class
Benzene	High strippability.
Toluene [1]	
Xylenes	
n-Heptane	
nHexane	
Chloroform [1]	
Methylene chloride [1]	
Chlorobenzene	
Methyl cellosolve	
Ammonia (aqueous) [1]	Medium strippability.
Diethyl amine	
Triethyl amine	
Acetone [1]	
4-Methyl-2-pentanone (MIBK)	
n-Amyl acetate	
n-Butyl acetate [1]	
Ethyl acetate	
Isopropyl acetate	
Methyl formate	
Isopropyl ether	
Tetrahydrofuran [1]	
1,2–Dichloroethane	
o-Dichlorobenzene	

[1] These paramaters may be used as a surrogate to represent other parameters in the same treatability class.

[63 FR 50437, Sept. 21, 1998; 64 FR 10393, Mar. 4, 1999]

PART 440—ORE MINING AND DRESSING POINT SOURCE CATEGORY

Subpart A—Iron Ore Subcategory

Sec.

440.10 Applicability; description of the iron ore subcategory.
440.11 [Reserved]
440.12 Effluent limitations representing the degree of effluent reduction attainable by the application of the best practicable control technology currently available (BPT).
440.13 Effluent limitations representing the degree of effluent reduction attainable by the application of the best available technology economically achievable (BAT).
440.14 New source performance standards (NSPS).
440.15 Effluent limitations representing the degree of effluent reduction attainable by the application of the best conventional pollutant control technology (BCT). [Reserved]

Subpart B—Aluminum Ore Subcategory

440.20 Applicability; description of the aluminum ore subcategory.
440.21 [Reserved]
440.22 Effluent limitations representing the degree of effluent reduction attainable by the application of the best practicable control technology currently available (BPT).
440.23 Effluent limitations representing the degree of effluent reduction attainable by the application of the best available technology economically achievable (BAT).

440.24 New source performance standards (NSPS).
440.25 Effluent limitations representing the degree of effluent reduction attainable by the application of the best conventional pollutant control technology (BCT). [Reserved]

Subpart C—Uranium, Radium, and Vanadium Ores Subcategory

440.30 Applicability; description of the uranium, radium and vanadium ores subcategory.
440.31 [Reserved]
440.32 Effluent limitations representing the degree of effluent reduction attainable by the application of the best practicable control technology currently available (BPT).
440.33 Effluent limitations representing the degree of effluent reduction attainable by the application of the best available technology economically achievable (BAT).
440.34 New source performance standards (NSPS).
440.35 Effluent limitations representing the degree of effluent reduction attainable by the application of the best conventional pollutant control technology (BCT). [Reserved]

Subpart D—Mercury Ore Subcategory

440.40 Applicability; description of the mercury ore subcategory.
440.41 [Reserved]
440.42 Effluent limitations representing the degree of effluent reduction attainable by the application of the best practicable control technology currently available (BPT).
440.43 Effluent limitations representing the degree of effluent reduction attainable by the application of the best available technology economically achievable (BAT).
440.44 New source performance standards (NSPS).
440.45 Effluent limitations representing the degree of effluent reduction attainable by the application of the best conventional pollutant control technology (BCT). [Reserved]

Subpart E—Titanium Ore Subcategory

440.50 Applicability; description of the titanium ore subcategory.
440.51 [Reserved]
440.52 Effluent limitations guidelines representing the degree of effluent reduction attainable by the application of the best practicable control technology currently available (BPT).
440.53 Effluent limitations representing the degree of effluent reduction attainable by the application of the best available technology economically achievable (BAT).
440.54 New source performance standards (NSPS).
440.55 Effluent limitations representing the degree of effluent reduction attainable by the application of the best conventional pollutant control technology (BCT). [Reserved]

Subpart F—Tungsten Ore Subcategory

440.60 Applicability; description of the tungsten ore subcategory.
440.61 [Reserved]
440.62 Effluent limitations representing the degree of effluent reduction attainable by the application of the best practicable control technology currently available (BPT).
440.63 Effluent limitations representing the degree of effluent reduction attainable by the application of the best available technology economically achievable (BAT).
440.64 New source performance standards (NSPS).
440.65 Effluent limitations representing the degree of effluent reduction attainable by the application of the best conventional pollutant control technology (BCT). [Reserved]

Subpart G—Nickel Ore Subcategory

440.70 Applicability; description of the nickel ore subcategory.
440.71 [Reserved]
440.72 Effluent limitations representing the degree of effluent reduction attainable by the application of the best practicable control technology currently available (BPT).
440.73 Effluent limitations representing the degree of effluent reduction attainable by the application of the best available technology economically achievable (BAT). [Reserved]
440.74 New source performance standards (NSPS). [Reserved]
440.75 Effluent limitations representing the degree of effluent reduction attainable by the application of the best conventional pollutant control technology (BCT). [Reserved]

Subpart H—Vanadium Ore Subcategory (Mined Alone and Not as a Byproduct)

440.80 Applicability; description of the vanadium ore subcategory.
440.81 [Reserved]
440.82 Effluent limitations representing the degree of effluent reduction attainable by the application of the best practicable control technology currently available (BPT).

440.83 Effluent limitations representing the degree of effluent reduction attainable by the application of the best available technology economically achievable (BAT). [Reserved]
440.84 New source performance standards (NSPS). [Reserved]
440.85 Effluent limitations representing the degree of effluent reduction attainable by the application of the best conventional pollutant control technology (BCT). [Reserved]

Subpart I—Antimony Ore Subcategory

440.90 Applicability; description of the antimony ore subcategory.
440.91 [Reserved]
440.92 Effluent limitations representing the degree of effluent reduction attainable by the application of the best practicable control technology currently available (BPT). [Reserved]
440.93 Effluent limitations representing the degree of effluent reduction attainable by the application of the best available technology economically achievable (BAT). [Reserved]
440.94 New source performance standards (NSPS). [Reserved]
440.95 Effluent limitations representing the degree of effluent reduction attainable by the application of the best conventional pollutant control technology (BCT). [Reserved]

Subpart J—Copper, Lead, Zinc, Gold, Silver, and Molybdenum Ores Subcategory

440.100 Applicability; description of the copper, lead, zinc, gold, silver, and molybdenum ores subcategory.
440.101 [Reserved]
440.102 Effluent limitations representing the degree of effluent reduction attainable by the application of the best practicable control technology (BPT).
440.103 Effluent limitations representing the degree of effluent reduction attainable by the application of the best available technology economically achievable (BAT).
440.104 New source performance standards (NSPS).
440.105 Effluent limitations representing the degree of effluent reduction attainable by the application of the best conventional pollutant control technology (BCT). [Reserved]

Subpart K—Platinum Ores Subcategory

440.110 Applicability; description of the platinum ore subcategory.
440.111 [Reserved]
440.112 Effluent limitations representing the degree of effluent reduction attainable by the application of the best practicable control technology currently available (BPT). [Reserved]
440.113 Effluent limitations representing the degree of effluent reduction attainable by the application of the best available technology economically achievable (BAT).
440.114 New source performance standards (NSPS). [Reserved]
440.115 Effluent limitations representing the degree of effluent reduction attainable by the application of the best conventional pollutant control technology (BCT). [Reserved]

Subpart L—General Provisions and Definitions

440.130 Applicability.
440.131 General provisions.
440.132 General definitions.

Subpart M—Gold Placer Mine Subcategory

440.140 Applicability; description of the gold placer mine subcategory.
440.141 Specialized definitions and provisions.
440.142 Effluent limitations representing the degree of effluent reduction attainable by the application of the best practicable control technology currently available (BPT).
440.143 Effluent limitations representing the degree of effluent reduction attainable by the application of the best available technology economically achievable (BAT).
440.144 New source performance standards (NSPS).
440.145—440.147 [Reserved]
440.148 Best Management Practices (BMP).

AUTHORITY: Secs. 301, 304(b), (c) and (e), 306, 307, and 501 of the Clean Water Act (The Federal Water Pollution Control Act Amendments of 1972, as amended by the Clean Water Act of 1977 and the Water Quality Act of 1987), (the Act), 33 U.S.C. 1311, 1314(b), (c) and (e), 1316, 1317, and 1361; 86 Stat. 816, Pub. L. 92–500; 91 Stat. 1567, Pub. L. 95–217; 101 Stat. 7, Pub. L. 100–4.

SOURCE: 47 FR 54609, Dec. 3, 1982, unless otherwise noted.

Subpart A—Iron Ore Subcategory

§ 440.10 Applicability; description of the iron ore subcategory.

The provisions of this subpart A are applicable to discharges from (a) mines operated to obtain iron ore, regardless of the type of ore or its mode of occurrence; (b) mills beneficiating iron ores

by physical (magnetic and nonmagnetic) and/or chemical separation; and (c) mills beneficiating iron ores by magnetic and physical separation in the Mesabi Range.

§ 440.11 [Reserved]

§ 440.12 Effluent limitations representing the degree of effluent reduction attainable by the application of the best practicable control technology currently available (BPT).

Except as provided in subpart L of this part and 40 CFR 125.30 through 125.32, any existing point source subject to this subpart must achieve the following effluent limitations representing the degree of effluent reduction attainable after application of the best practicable control technology currently available (BPT):

(a) The concentration of pollutants discharged in mine drainage from mines operated to obtain iron ore shall not exceed:

Effluent characteristic	Effluent limitations	
	Maximum for any 1 day	Average of daily values for 30 consecutive days
	Milligrams per liter	
TSS	30	20
Fe (dissolved)	2.0	1.0
pH	(1)	(1)

[1] Within the range 6.0 to 9.0.

(b) Except as provided in paragraph (c) of this section, the concentration of pollutants discharged from mills that employ physical (magnetic and nonmagnetic) and/or chemical methods to beneficiate iron ore shall not exceed:

Effluent characteristic	Effluent limitations	
	Maximum for any 1 day	Average of daily values for 30 consecutive days
TSS	30	20
Fe (dissolved)	2.0	1.0
pH	(1)	(1)

[1] Within the range 6.0 to 9.0.

(c)(1) Except as provided in paragraph (c) of this section, there shall be no discharge of process wastewater to navigable waters from mills that employ magnetic and physical methods to beneficiate iron ore in the Mesabi Range. The Agency recognizes that the elimination of the discharge of pollutants to navigable waters may result in an increase in discharges of some pollutants to other media. The Agency has considered these impacts and has addressed them in the preamble published on December 3, 1982.

(2) In the event that the annual precipitation falling on the treatment facility and the drainage area contributing surface runoff to the treatment facility exceeds the annual evaporation, a volume of water equivalent to the difference between annual precipitation falling on the treatment facility and the drainage area contributing surface runoff to the treatment facility and annual evaporation may be discharged subject to the limitations set forth in paragraph (a) of this section.

§ 440.13 Effluent limitations representing the degree of effluent reduction attainable by the application of the best available technology economically achievable (BAT).

Except as provided in subpart L of this part and 40 CFR 125.30 through 125.32, any existing point source subject to this subpart must achieve the following effluent limitations representing the degree of effluent reduction attainable by the application of the best available technology economically achievable (BAT):

(a) The concentration of pollutants discharged in mine drainage from mines operated to obtain iron ore shall not exceed:

Effluent characteristic	Effluent limitations	
	Maximum for any 1 day	Average of daily values for 30 consecutive days
	Milligrams per liter	
Fe (dissolved)	2.0	1.0

(b) Except as provided in paragraph (c) of this section the concentration of pollutants discharged from mills that employ physical (magnetic and nonmagnetic) and/or chemical methods to beneficiate iron ore shall not exceed:

Effluent characteristic	Effluent limitations	
	Maximum for any 1 day	Average of daily values for 30 consecutive days
	Milligrams per liter	
Fe (dissolved)	2.0	1.0

(c)(1) Except as provided in paragraph (c) of this section, there shall be no discharge of process wastewater to navigable waters from mills that employ magnetic and physical methods to beneficiate iron ore in the Mesabi Range. The Agency recognizes that the elimination of the discharge of pollutants to navigable waters may result in an increase in discharges of some pollutants to other media. The Agency has considered these impacts and has addressed them in the preamble published on December 3, 1982.

(2) In the event that the annual precipitation falling on the treatment facility and the drainage area contributing surface runoff to the treatment facility exceeds the annual evaporation, a volume of water equal to the difference between annual precipitation falling on the treatment facility and the drainage area contributing surface runoff to the treatment facility and annual evaporation may be discharged subject to the limitations set forth in paragraph (a) of this section.

§ 440.14 New source performance standards (NSPS).

Except as provided in subpart L of this part, any new source subject to this subpart must achieve the following NSPS representing the degree of effluent reduction attainable by applying the best available demonstrated technology (BADT):

(a) The concentration of pollutants discharged in mine drainage from mines operated to obtain iron ore shall not exceed:

Effluent characteristic	Effluent limitations	
	Maximum for any 1 day	Average of daily values for 30 consecutive days
	Milligrams per liter	
Fe (dissolved)	2.0	1.0
pH	(1)	(1)
TSS	30.0	20.0

[1] Within the range of 6.0, to 9.0.

(b) Except as provided in paragraph (c) of this section, the concentration of pollutants discharged from mills that employ physical (magnetic and nonmagnetic) and/or chemical methods to beneficiate iron ore shall not exceed:

Effluent characteristic	Effluent limitations	
	Maximum for any 1 day	Average of daily values for 30 consecutive days
	Milligrams per liter	
Fe (dissolved)	2.0	1.0
pH	(1)	(1)
TSS	30.0	20.0

[1] Within the range of 6.0 to 9.0.

(c)(1) Except as provided in paragraph (c) of this section, there shall be no discharge of process wastewater to navigable waters from mills that employ magnetic and physical methods to beneficiate iron ore in the Mesabi Range. The Agency recognizes that the elimination of the discharge of pollutants to navigable waters may result in an increase in discharges of some pollutants to other media. The Agency has considered these impacts and has addressed them in the preamble published on December 3, 1982.

(2) In the event that the annual precipitation falling on the treatment facility and the drainage area contributing surface runoff to the treatment facility exceeds the annual evaporation, a volume of water equal to the difference between annual precipitation falling on the treatment facility and the drainage area contributing surface runoff to the treatment facility

and annual evaporation may be discharged subject to the limitations set forth in paragraph (a) of this section.

§ 440.15 Effluent limitations representing the degree of effluent reduction attainable by the application of the best conventional pollutant control technology (BCT). [Reserved]

Subpart B—Aluminum Ore Subcategory

§ 440.20 Applicability; description of the aluminum ore subcategory.

The provisions of this subpart B are applicable to discharges from facilities engaged in the mining of bauxite as an aluminum ore.

§ 440.21 [Reserved]

§ 440.22 Effluent limitations representing the degree of effluent reduction attainable by the application of the best practicable control technology currently available (BPT).

Except as provided in subpart L of this part and 40 CFR 125.30 through 125.32, any existing source subject to this subpart must achieve the following effluent limitations representing the degree of effluent reduction attainable by the application of the best practicable control technology currently available (BPT). The concentration of pollutants discharged in mine drainage from mines producing bauxite ores shall not exceed:

Effluent characteristic	Effluent limitations	
	Maximum for any 1 day	Average of daily values for 30 consecutive days
	Milligrams per liter	
TSS	30	20
Fe	1.0	.5
A1	2.0	1.0
pH	([1])	([1])

[1] Within the range of 6.0 to 9.0.

§ 440.23 Effluent limitations representing the degree of effluent reduction attainable by the application of the best available technology economically achievable (BAT).

Except as provided in subpart L of this part and 40 CFR 125.30 through 125.32, any existing point source subject to this subpart must achieve the following limitations representing the degree of effluent reduction attainable by the application of the best available technology economically achievable (BAT). The concentration of pollutants discharged in mine drainage from mines producing bauxite ores shall not exceed:

Effluent characteristic	Effluent limitations	
	Maximum for any 1 day	Average of daily values for 30 consecutive days
	Milligrams per liter	
Fe (total)	1.0	0.5
Al	2.0	1.0

§ 440.24 New Source performance standards (NSPS).

Except as provided in subpart L of this part, any new source subject to this subpart must achieve the following NSPS representing the degree of effluent reduction attainable by the application of the best available demonstrated technology (BADT). The concentration of pollutants discharged in mine drainage from mines producting bauxite ores shall not exceed:

Effluent characteristic	Effluent limitations	
	Maximum for any 1 day	Average of daily values for 30 consecutive days
	Milligrams per liter	
Fe (total)	1.0	0.5
Al	2.0	1.0
pH	([1])	([1])
TSS	30.0	20.0

[1] Within the range of 6.0 to 9.0.

§ 440.25 Effluent limitations representing the degree of effluent reduction attainable by the application of the best conventional pollutant control technology (BCT). [Reserved]

Subpart C—Uranium, Radium and Vanadium Ores Subcategory

§ 440.30 Applicability; description of the uranium, radium and vanadium ores subcategory.

The provisions of this subpart C are applicable to discharges from (a) mines either open-pit or underground, from which uranium, radium and vanadium ores are produced; and (b) mills using the acid leach, alkaline leach, or combined acid and alkaline leach process for the extraction of uranium, radium and vanadium. Only vanadium byproduct production from uranium ores is covered under this subpart.

§ 440.31 [Reserved]

§ 440.32 Effluent limitations representing the degree of effluent reduction attainable by the application of the best practicable control technology currently available (BPT).

Except as provided in subpart L of this part and 40 CFR 125.30 through 125.32, any existing point source subject to this subpart must achieve the following effluent limitations representing the degree of effluent reduction attainable after application of the best practicable control technology currently available (BPT):

(a) The concentration of pollutants discharged in mine drainage from mines, either open-pit or underground, from which uranium, radium and vanadium ores are produced excluding mines using in-situ leach methods shall not exceed:

Effluent characteristic	Effluent limitations	
	Maximum for any 1 day	Average of daily values for 30 consecutive days
	Milligrams per liter	
TSS	30	20
COD	200	100
Zn	1.0	0.5
Ra226 [1] (dissolved)	10	3
Ra226 [1] (total)	30	10
U	4	2
pH	([2])	([2])

[1] Values in picocuries per liter (pCi/l).
[2] Within the range 6.0 to 9.0.

(b) The concentrations of pollutants discharged from mills using the acid leach, alkaline leach or combined acid and alkaline leach process for the extraction of uranium, radium and vanadium including mill-mine facilities and mines using in-situ leach methods shall not exceed:

Effluent characteristic	Effluent limitations	
	Maximum for any 1 day	Average of daily values for 30 consecutive days
	Milligrams per liter	
TSS	30	20
COD	.....	500
As	1.0	.5
Zn	1.00	.5
Ra226 [1] (dissolved)	10	3
Ra226 [1] (total)	30	10
NH_3	.....	100
pH	([2])	([2])

[1] Values in picocuries per liter (pCi/l).
[2] Within the range 6.0 to 9.0.

§ 440.33 Effluent limitations representing the degree of effluent reduction attainable by the application of the best available technology economically achievable (BAT).

Except as provided in subpart L of this part and 40 CFR 125.30 through 125.32, any existing point source subject to this subpart must achieve the following limitations representing the degree of effluent reduction attainable by the application of the best available technology economically achievable (BAT):

(a) The concentration of pollutants discharged in mine drainage from mines, either open-pit or underground, that produce uranium ore, including

mines using in-situ leach methods, shall not exceed:

Effluent characteristic	Effluent limitations	
	Maximum for any 1 day	Average of daily values for 30 consecutive days
	Milligrams per liter	
COD	200	100
Zn	1.00	.5
Ra226 [1] (dissolved)	10.0	3.0
Ra226 [1] (total)	30.0	10.0
U	4.0	2.0

[1] Values in picocuries per liter (pCi/l).

§ 440.34 New source performance standards (NSPS).

Except as provided in subpart L of this part any new source subject to this subpart must achieve the following NSPS representing the degree of effluent reduction attainable by the application of the best available demonstrated technology (BADT):

(a) The concentration of pollutants discharged in mine drainage from mines, either open-pit or underground, that produce uranium ore, excluding mines using in situ leach methods, shall not exceed:

Effluent characteristic	Effluent limitations	
	Maximum for any 1 day	Average of daily values for 30 consecutive days
	Milligrams per liter	
COD	200	100
Zn	1.0	0.5
Ra [1] 226 (dissolved)	10.0	3.0
Ra [1] 226 (total)	30.0	10.0
U	4.0	2.0
pH	([2])	([2])
TSS	30.0	20.0

[1] Values in picocuries per liter (pCi/l).
[2] Within the range 6.0 to 9.0.

(b)(1) Except as provided in paragraph (b) of this section, there shall be no discharge of process wastewater to navigable waters from mills using the acid leach, alkaline leach or combined acid and alkaline leach process for the extraction of uranium or from mines and mills using in situ leach methods. The Agency recognizes that the elimination of the discharge of pollutants to navigable waters may result in an increase in discharges of some pollutants to other media. The Agency has considered these impacts and has addressed them in the preamble published on December 3, 1982.

(2) In the event that the annual precipitation falling on the treatment facility and the drainage area contributing surface runoff to the treatment facility exceeds the annual evaporation, a volume of water equivalent to the difference between annual precipitation falling on the treatment facility and the drainage area contributing surface runoff to the treatment facility and annual evaporation may be discharged subject to the limitations set forth in paragraph (a) of this section.

§ 440.35 Effluent limitations representing the degree of effluent reduction attainable by the application of the best conventional pollutant control technology (BCT). [Reserved]

Subpart D—Mercury Ore Subcategory

§ 440.40 Applicability; description of the mercury ore subcategory.

The provisions of subpart D are applicable to discharges from (a) mines, either open-pit or underground, that produce mercury ores; and (b) mills beneficiating mercury ores by gravity separation methods or by froth-flotation methods.

§ 440.41 [Reserved]

§ 440.42 Effluent limitations representing the degree of effluent reduction attainable by the application of the best practicable control technology currently available (BPT).

Except as provided in subpart L of this part and 40 CFR 125.30 through 125.32, any existing point source subject to this subpart must achieve the following effluent limitations representing the degree of effluent reduction attainable after application of the best practicable control technology currently available (BPT):

(a) The concentration of pollutants discharged in mine drainage from mines, either open-pit or underground, operated for the production of mercury ores shall not exceed the following limitations:

Effluent characteristic	Effluent limitations	
	Maximum for any 1 day	Average of daily values for 30 consecutive days
	Milligrams per liter	
TSS	30	20
Hg	.002	.001
Ni	.2	.1
pH	(1)	(1)

1 Within the range 6.0 to 9.0.

(b)(1) Except as provided in paragraph (b) of this section, there shall be no discharge of process wastewater to navigable waters from mills beneficiating mercury ores by gravity separation methods or by froth flotation methods. The Agency recognizes that the elimination of the discharge of pollutants to navigable waters may result in an increase in discharges of some pollutants to other media. The Agency has considered these impacts and has addressed them in the preamble published on December 3, 1982.

(2) In the event that the annual precipitation falling on the treatment facility and the drainage area contributing surface runoff to the treatment facility exceeds the annual evaporation, a volume of water equivalent to the difference between annual precipitation falling on the treatment facility and the drainage area contributing surface runoff to the treatment facility and annual evaporation may be discharged subject to the limitations set forth in paragraph (a)(1) of this section.

§ 440.43 Effluent limitations representing the degree of effluent reduction attainable by the application of the best available technology economically achievable (BAT).

Except as provided in subpart L of this part and 40 CFR 125.30 through 125.32, any existing point source subject to this subpart must achieve the following limitations representing the degree of effluent reduction attainable by the application of the best available technology economically achievable (BAT).

(a) The concentration of pollutants discharged in mine drainage from mines, either open pit or underground, that produce mercury ores shall not exceed:

Effluent characteristic	Effluent limitations	
	Maximum for any 1 day	Average of daily values for 30 consecutive days
	MIligrams per liter	
Hg	0.002	0.001

(b)(1) Except as provided in paragraph (b) of this section, there shall be no discharge of process wastewater to navigable waters from mills beneficiating mercury ores by gravity separation methods or by froth-flotation methods. The Agency recognizes that the elimination of the discharge of pollutants to navigable waters may result in an increase in discharges of some pollutants to other media. The Agency has considered these impacts and has addressed them in the preamble published on December 3, 1982.

(2) In the event that the annual precipitation falling on the treatment facility and the drainage area contributing surface runoff to the treatment facility exceeds the annual evaporation, a volume of water equal to the difference between annual precipitation falling on the treatment facility and the drainage area contributing surface runoff to the treatment facility and annual evaporation may be discharged subject to the limitations set forth in paragraph (a) of this section.

§ 440.44 New source performance standards (NSPS).

Except as provided in subpart L of this part any new source subject to this subpart must achieve the following NSPS representing the degree of effluent reduction attainable by the application of the best available demonstrated technology (BADT):

(a) The concentration of pollutants discharged in mine drainage from mines, either open pit or underground, that produce mercury ores shall not exceed:

Effluent characteristic	Effluent limitations	
	Maximum for any 1 day	Average of daily values for 30 consecutive days
	Milligrams per liter	
Hg	0.002	0.001
pH	(1)	(1)
TSS	30.0	20.0

[1] Within the range of 6.0 to 9.0.

(b)(1) Except as provided in paragraph (b) of this section, there shall be no discharge of process wastewater to navigable waters from mills beneficiating mercury ores by gravity separation methods or by froth-flotation methods. The Agency recognizes that the elimination of the discharge of pollutants to navigable waters may result in an increase in discharges of some pollutants to other media. The Agency has considered these impacts and has addressed them in the preamble published on December 3, 1982.

(2) In the event that the annual precipitation falling on the treatment facility and the drainage area contributing surface runoff to the treatment facility exceeds the annual evaporation, a volume of water equal to the difference between annual precipitation falling on the treatment facility and the drainage area contributing surface runoff to the treatment facility and annual evaporation may be discharged subject to the limitations set forth in paragraph (a) of this section.

§ 440.45 Effluent limitations representing the degree of effluent reduction attainable by the application of the best conventional pollutant control technology (BCT). [Reserved]

Subpart E—Titanium Ore Subcategory

§ 440.50 Applicability; description of the titanium ore subcategory.

The provisions of this subpart E are applicable to discharges from (a) mines obtaining titanium ores from lode deposits; (b) mills beneficiating titanium ores by electrostatic methods, magnetic and physical methods, or flotation methods; and (c) mines engaged in the dredge mining of placer deposits of sands containing rutile, ilmenite, leucoxene, monazite, zircon, and other heavy metals, and the milling techniques employed in conjunction with the dredge mining activity (milling techniques employed include the use of wet gravity methods in conjunction with electrostatic or magnetic methods).

§ 440.51 [Reserved]

§ 440.52 Effluent limitations guidelines representing the degree of effluent reduction attainable by the application of the best practicable control technology currently available (BPT).

Except as provided in subpart L of this part and 40 CFR 125.30 through 125.32, any existing point source subject to this subpart must achieve the following effluent limitations representing the degree of effluent reduction attainable after application of the best practicable control technology currently available (BPT):

(a) The concentration of pollutants discharged in mine drainage from mines obtaining titanium ores from lode deposits shall not exceed:

Effluent characteristic	Effluent limitations	
	Maximum for any 1 day	Average of daily values for 30 consecutive days
	Milligrams per liter	
TSS	30	20
Fe	2.0	1.0
pH	(1)	(1)

[1] Within the range 6.0 to 9.0.

(b) The concentration of pollutants discharged from mills beneficiating titanium ores by electrostatic methods, magnetic and physical methods, or flotation methods shall not exceed:

Effluent characteristic	Effluent limitations	
	Maximum for any 1 day	Average of daily values for 30 consecutive days
	Milligrams per liter	
TSS	30	20
Zn	1.0	.5
Ni	.2	.1
pH	(1)	(1)

[1] Within the range 6.0 to 9.0.

(c) The concentration of pollutants discharged in mine drainage from mines engaged in the dredge mining of placer deposits of sands containing rutile, ilmenite, leucoxene, monazite, zircon, or other heavy metals, and the milling techniques employed in conjunction with the dredge mining activity (milling techniques employed include the use of wet gravity methods in conjunction with electrostatic or magnetic methods) shall not exceed:

Effluent characteristic	Effluent limitations	
	Maximum for any 1 day	Average of daily values for 30 consecutive days
	Milligrams per liter	
TSS	30	20
Fe	2	1
pH	(1)	(1)

[1] Within the range 6.0 to 9.0.

§ 440.53 Effluent limitations representing the degree of effluent reduction attainable by the application of the best available technology economically achievable (BAT).

Except as provided in subpart L of this part and 40 CFR 125.30 through 125.32, any existing point source subject to this subpart must achieve the following limitations representing the degree of effluent reduction attainable by the application of the best available technology economically achievable (BAT):

(a) The concentration of pollutants discharged in mine drainage from mines obtaining titanium ores from lode deposits shall not exceed:

Effluent characteristic	Effluent limitations	
	Maximum for any 1 day	Average of daily values for 30 consecutive days
	Milligrams per liter	
Fe	2.0	1.0

(b) The concentration of pollutants discharged from mills beneficiating titanium ores by electrostatic methods, magnetic and physical methods, or flotation methods shall not exceed:

Effluent characteristic	Effluent limitations	
	Maximum for any 1 day	Average of daily values for 30 consecutive days
	Milligrams per liter	
Zn	1.0	0.5

(c) The concentration of pollutants discharged in mine drainage from mines engaged in the dredge mining of placer deposits of sands containing rutile, ilmenite, leucoxene, monazite, or zircon and the milling techniques employed in conjunction with the dredge mining activity (milling techniques employed include the use of wet gravity methods in conjunction with electrostatic or magnetic methods) shall not exceed:

Effluent characteristic	Effluent limitations	
	Maximum for any 1 day	Average of daily values for 30 consecutive days
	Milligrams per liter	
Fe	2.0	1.0

§ 440.54 New source performance standards (NSPS).

Except as provided in subpart L of this part any new source subject to this subpart must achieve the following NSPS representing the degree of effluent reduction attainable by the applications of the best available demonstrated technology (BADT):

(a) The concentration of pollutants discharged in mine drainage from mines obtaining titanium ores from lode deposits shall not exceed:

Effluent characteristic	Effluent limitations	
	Maximum for any 1 day	Average of daily values for 30 consecutive days
	Milligrams per liter	
Fe	2.0	1.0
pH	(1)	(1)
TSS	30.0	20.0

[1] Within the range of 6.0 to 9.1.

(b) The concentration of pollutants discharged from mills beneficiating titanium ores by electrostatic methods, magnetic and physical methods, or flotation methods shall not exceed:

Effluent characteristic	Effluent limitations	
	Maximum for any 1 day	Average of daily values for 30 consecutive days
	Milligrams per liter	
Zn	1.0	0.5
pH	(1)	(1)
TSS	30.0	20.0

[1] Within the range of 6.0 to 9.1.

(c) The concentration of pollutants discharged in mine drainage from mines engaged in the dredge mining of placer deposits of sands containing rutile, ilmenite, leucoxene, monazite, zircon and the milling techniques employed in conjunction with the dredge mining activity (milling techniques employed include the use of wet gravity methods in conjunction wth electrostatic or magnetic methods) shall not exceed:

Effluent characteristic	Effluent limitations	
	Maximum for any 1 day	Average of daily values for 30 consecutive days
	Milligrams per liter	
Fe	2.0	1.0
pH	(1)	(1)
TSS	30.0	20.0

[1] Within the range of 6.0 to 9.1.

§ 440.55 Effluent limitations representing the degree of effluent reduction attainable by the application of the best conventional pollutant control technology (BCT). [Reserved]

Subpart F—Tungsten Ore Subcategory

§ 440.60 Applicability; description of the tungsten ore subcategory.

The provisions of this subpart F are applicable to discharges from (a) mines that produce tungsten ore and (b) mills that process tungsten ore by either the gravity separation or froth-flotation methods.

§ 440.61 [Reserved]

§ 440.62 Effluent limitations representing the degree of effluent reduction attainable by the application of the best practicable control technology currently available (BPT).

Except as provided in subpart L of this part and 40 CFR 125.30 through 125.32, any existing point source subject to this subpart must achieve the following effluent limitations representing the degree of effluent reduction attainable by the application of the best practicable control technology currently available (BPT):

(a) The concentration of pollutants discharged in mine drainage from mines producing 5000 metric tons (5512 short tons) or more of tungsten bearing ores per year shall not exceed:

Effluent characteristic	Effluent limitations	
	Maximum for any 1 day	Average of daily values for 30 consecutive days
	Milligrams per liter	
TSS	30	20
Cd	.10	.05
Cu	.3	.15
Zn	1.0	.5
Pb	.6	.3
As	1.0	.5
pH	(1)	(1)

[1] Within the range 6.0 to 9.0.

(b) The concentration of pollutants discharged in mine drainage from mines producing less than 5000 metric tons (5512 short tons) or discharged from mills processing less than 5000 metric tons (5512 short tons) of tungsten ores per year by methods other than ore leaching shall not exceed:

Effluent characteristic	Effluent limitations	
	Maximum for any 1 day	Average of daily values for 30 consecutive days
	Milligrams per liter	
TSS	50	30
pH	(1)	(1)

[1] Within the range 6.0 to 9.0.

(c) The concentration of pollutants discharged from mills processing 5000 metric tons (5512 short tons) or more of

tungsten ores per year by purely physical methods including ore crushing, washing, jigging, heavy media separation, and magnetic and electrostatic separation shall not exceed:

Effluent characteristic	Effluent limitations	
	Maximum for any 1 day	Average of daily values for 30 consecutive days
	Milligrams per liter	
TSS	30	20
Cd	.10	.05
Cu	.30	.15
Zn	1.0	.5
As	1.0	.5
pH	(1)	(1)

1 Within the range 6.0 to 9.0.

(d) The concentration of pollutants discharged from mills processing 5000 metric tons (5512 short tons) or more of tungsten ores per year by froth flotation methods shall not exceed:

Effluent characteristic	Effluent limitations	
	Maximum for any 1 day	Average of daily values for 30 consecutive days
	Milligrams per liter	
TSS	30	20
Cd	.10	.05
Cu	.30	.15
Zn	1.0	.5
As	1.0	.5
pH	(1)	(1)

1 Within the range 6.0 to 9.0.

§ 440.63 Effluent limitations representing the degree of effluent reduction attainable by the application of the best available technology economically achievable (BAT).

Except as provided in subpart L of this part and 40 CFR 125.30 through 125.32, any existing point source subject to this subpart must achieve the following limitations representing the degree of effluent reduction attainable by the application of the best available technology economically achievable (BAT):

(a) The concentration of pollutants discharged in mine drainage from tungsten mines shall not exceed:

Effluent characteristic	Effluent limitations	
	Maximum for any 1 day	Average of daily values for 30 consecutive days
	Milligrams per liter	
Cd	0.10	0.05
Cu	0.30	0.15
Zn	1.0	0.5

(b) The concentration of pollutants discharged from mills shall not exceed:

Effluent characteristic	Effluent limitations	
	Maximum for any 1 day	Average of daily values for 30 consecutive days
	Milligrams per liter	
Cd	0.10	0.05
Cu	0.3	0.15
Zn	1.0	0.5

§ 440.64 New source performance standards (NSPS).

Except as provided in subpart L of this part any new source subject to this subpart must achieve the following NSPS representing the degree of effluent reduction attainable by the application of the best available demonstrated technology (BADT):

(a) The concentration of pollutants discharged in mine drainage from tungsten mines shall not exceed:

Effluent characteristic	Effluent limitations	
	Maximum for any 1 day	Average of daily values for 30 consecutive days
	Milligrams per liter	
Cd	0.10	0.05
Cu	0.30	0.15
Zn	1.0	0.5
pH	(1)	(1)
TSS	30.0	20.0

1 Within the range of 6.0 to 9.0.

(b) The concentration of pollutants discharged from mills shall not exceed:

Effluent characteristic	Effluent limitations	
	Maximum for any 1 day	Average of daily values for 30 consecutive days
	Milligrams per liter	
Cd	0.10	0.05
Cu	0.3	0.15
Zn	1.0	0.5
pH	(1)	(1)
TSS	30.0	20.0

[1] Within the range of 6.0 to 9.0.

§ 440.65 Effluent limitations representing the degree of effluent reduction attainable by the application of the best conventional pollutant control technology (BCT). [Reserved]

Subpart G—Nickel Ore Subcategory

§ 440.70 Applicability; description of the nickel ore subcategory.

The provisions of this subpart G are applicable to discharges from (a) mines that produce nickel ore and (b) mills that process nickel ore.

§ 440.71 [Reserved]

§ 440.72 Effluent limitations representing the degree of effluent reduction attainable by the application of the best practicable control technology currently available (BPT).

Except as provided in subpart L of this part and 40 CFR 125.30 through 125.32, any existing point source subject to this subpart must achieve the following effluent limitations representing the degree of effluent reduction attainable by the application of the best practicable control technology currently available (BPT):

(a) The concentration of pollutants discharged in mine drainage from mines producing 5000 metric tons (5512 short tons) or more of nickel bearing ores per year shall not exceed:

Effluent characteristic	Effluent limitations	
	Maximum for any 1 day	Average of daily values for 30 consecutive days
	Milligrams per liter	
TSS	30	20
Cd	.10	.05
Cu	.3	.15
Zn	1.0	.5
Pb	.6	.3
As	1.0	.5
pH	(1)	(1)

[1] Within the range 6.0 to 9.0.

(b) The concentration of pollutants discharged in mine drainage from mines producing less than 5,000 metric tons (5,512 short tons) or discharged from mills processing less than 5,000 metric tons (5,512 short tons) of nickel ores per year by methods other than ore leaching shall not exceed:

Effluent characteristic	Effluent limitations	
	Maximum for any 1 day	Average of daily values for 30 consecutive days
	Milligrams per liter	
TSS	50	30
pH	(1)	(1)

[1] Within the range 6.0 to 9.0.

(c) The concentration of pollutants discharged from mills processing 5,000 metric tons (5,512 short tons) or more of nickel ores per year by purely physical methods including ore crushing, washing, jigging, heavy media separation and magnetic and electrostatic separation shall not exceed:

Effluent characteristic	Effluent limitations	
	Maximum for any 1 day	Average of daily values for 30 consecutive days
	Milligrams per liter	
TSS	30	20
Cd	.10	.05
Cu	.30	.15
Zn	1.0	.5
As	1.0	.5
pH	(1)	(1)

[1] Within the range 6.0 to 9.0

(d) The concentration of pollutants discharged from mills processing 5,000 metric tons (5,512 short tons) or more

of nickel ore per year by froth flotation methods shall not exceed:

Effluent characteristic	Effluent limitations	
	Maximum for any 1 day	Average of daily values for 30 consecutive days
	Milligrams per liter	
TSS	30	20
Cd	.10	.05
Cu	.30	.15
Zn	1.0	.5
As	1.0	.5
pH	(1)	(1)

[1] Within the range 6.0 to 9.0.

§ 440.73 Effluent limitations representing the degree of effluent reduction attainable by the application of the best available technology economically achievable (BAT). [Reserved]

§ 440.74 New source performance standards (NSPS). [Reserved]

§ 440.75 Effluent limitations representing the degree of effluent reduction attainable by the application of the best conventional pollutant control technology (BCT). [Reserved]

Subpart H—Vanadium Ore Subcategory (Mined Alone and Not as a Byproduct)

§ 440.80 Applicability; description of the vanadium ore subcategory.

The provisions of this subpart H are applicable to discharges from (a) mines that produce vanadium ore (recovered alone and not as a by-product of uranium mining and mills) and (b) mills that process vanadium ore (recovered alone, not as a byproduct of uranium mining and mills).

§ 440.81 [Reserved]

§ 440.82 Effluent limitations representing the degree of effluent reduction attainable by the application of the best practicable control technology currently available (BPT).

Except as provided in subpart L of this part and 40 CFR 125.30 through 125.32, any existing point source subject to this subpart must achieve the following effluent limitations representing the degree of effluent reduction attainable by the application of the best practicable control technology currently available (BPT):

(a) The concentration of pollutants discharged in mine drainage from mines producing 5,000 metric tons (5,512 short tons) or more of vanadium bearing ores per year shall not exceed:

Effluent characteristic	Effluent limitations	
	Maximum for any 1 day	Average of daily values for 30 consecutive days
	Milligrams per liter	
TSS	30	20
Cd	.10	.05
Cu	.3	.15
Zn	1.0	.5
Pb	.6	.3
As	1.0	.5
pH	(1)	(1)

[1] Within the range 6.0 to 9.0.

(b) The concentration of pollutants discharged in mine drainage from mines producing less than 5,000 metric tons (5,512 short tons) or discharged from mills processing less than 5,000 metric tons (5,512 short tons) of vanadium ore per year by methods other than ore leaching shall not exceed:

Effluent characteristic	Effluent limitations	
	Maximum for any 1 day	Average of daily values for 30 consecutive days
	Milligrams per liter	
TSS	50	30
pH	(1)	(1)

[1] Within the range 6.0 to 9.0.

(c) The concentration of pollutants discharged from mills processing 5,000 metric tons (5,512 short tons) or more of vanadium ores per year by purely physical methods including ore crushing, washing, jigging, heavy media separation, and magnetic and electrostatic separation shall not exceed:

Effluent characteristic	Effluent limitations	
	Maximum for any 1 day	Average of daily values for 30 consecutive days
	Milligrams per liter	
TSS	30	20
Cd	.10	.05
Cu	.30	.15
Zn	1.0	.5
As	1.0	.5
pH	(1)	(1)

[1] Within the range 6.0 to 9.0.

(d) The concentration of pollutants discharged from mills processing 5,000 metric tons (5,512 short tons) or more of vanadium ores per year by froth flotation methods shall not exceed:

Effluent characteristic	Effluent limitations	
	Maximum for any 1 day	Average of daily values for 30 consecutive days
	Milligrams per liter	
TSS	30	20
Cd	.10	.05
Cu	.30	.15
Zn	1.0	.5
As	1.0	.5
pH	(1)	(1)

[1] Within the range 6.0 to 9.0.

§ 440.83 Effluent limitations representing the degree of effluent reduction attainable by the application of the best available technology economically achievable (BAT). [Reserved]

§ 440.84 New source performance standards (NSPS). [Reserved]

§ 440.85 Effluent limitations representing the degree of effluent reduction attainable by the application of the best conventional pollutant control technology (BCT). [Reserved]

Subpart I—Antimony Ore Subcategory

§ 440.90 Applicability; description of the antimony ore subcategory.

The provisions of this subpart I are applicable to discharges from (a) mines that produce antimony ore and (b) mills that process antimony ore.

§ 440.91 [Reserved]

§ 440.92 Effluent limitations representing the degree of effluent reduction attainable by the application of the best practicable control technology currently available (BPT). [Reserved]

§ 440.93 Effluent limitations representing the degree of effluent reduction attainable by the application of the best available technology economically achievable (BAT). [Reserved]

§ 440.94 New source performance standards (NSPS). [Reserved]

§ 440.95 Effluent limitations representing the degree of effluent reduction attainable by the application of the best conventional pollutant control technology (BCT). [Reserved]

Subpart J—Copper, Lead, Zinc, Gold, Silver, and Molybdenum Ores Subcategory

§ 440.100 Applicability; description of the copper, lead, zinc, gold, silver, and molybdenum ores subcategory.

(a) The provisions of this subpart J are applicable to discharges from—

(1) Mines that produce copper, lead, zinc, gold, silver, or molybdenum bearing ores, or any combination of these ores from open-pit or underground operations other than placer deposits;

(2) Mills that use the froth-flotation process alone or in conjunction with other processes, for the beneficiation of copper, lead, zinc, gold, silver, or molybdenum ores, or any combination of these ores;

(3) Mines and mills that use dump, heap, in-situ leach, or vat-leach processes to extract copper from ores or ore waste materials; and

(4) Mills that use the cyanidation process to extract gold or silver.

(b) Discharge from mines or mines and mills that use gravity separation methods (including placer or dredge mining or concentrating operations, and hydraulic mining operations) to extract gold ores are regulated under subpart M.

(c) Discharge from mines (including placer or dredge mining, and hydraulic

mining operations) or mines and mills that use gravity separation methods to extract silver from placer ores are not covered under this part.

(d) The provisions of this subpart shall not apply to discharges from the Quartz Hill Molybdenum Project in the Tongass National Forest, Alaska.

[47 FR 54609, Dec. 3, 1982, as amended at 53 FR 18788, May 24, 1988]

§ 440.101 [Reserved]

§ 440.102 Effluent limitations representing the degree of effluent reduction attainable by the application of the best practicable control technology (BPT).

Except as provided in subpart L of this part and 40 CFR 125.30 through 125.32, any existing point source subject to this subpart must achieve the following effluent limitations representing the degree of effluent reduction attainable by the application of the best practicable control technology currently available (BPT):

(a) The concentration of pollutants discharged in mine drainage from mines operated to obtain copper bearing ores, lead bearing ores, zinc bearing ores, gold bearing ores, or silver bearing ores, or any combination of these ores open-pit or underground operations other than placer deposits shall not exceed:

Effluent characteristic	Effluent limitations	
	Maximum for any 1 day	Average of daily values for 30 consecutive days
	Milligrams per liter	
TSS	30	20
Cu	.30	.15
Zn	1.5	.75
Pb	.6	.3
Hg	.002	.001
pH	(1)	(1)

1 Within the range 6.0 to 9.0.

(b) The concentration of pollutants discharged from mills which employ the froth flotation process alone or in conjunction with other processes, for the beneficiation of copper ores, lead ores, zinc ores, gold ores, or silver ores, or any combination of these ores shall not exceed:

Effluent characteristic	Effluent limitations	
	Maximum for any 1 day	Average of daily values for 30 consecutive days
	Milligrams per liter	
TSS	30	20
Cu	.30	.15
Zn	1.0	.5
Pb	.6	.3
Hg	.002	.001
Cd	.10	.05
pH	(1)	(1)

1 Within the range 6.0 to 9.0.

(c)(1) Except as provided in paragraph (c) of this section, there shall be no discharge of process wastewater to navigable water from mines and mills which employ dump, heap, in situ leach or vat leach processes for the extraction of copper from ores or ore waste materials. The Agency recognizes that the elimination of the discharge of pollutants to navigable waters may result in an increase in discharges of some pollutants to other media. The Agency has considered these impacts and has addressed them in the preamble published on December 3, 1982.

(2) In the event that the annual precipitation falling on the treatment facility and the drainage area contributing surface runoff to the treatment facility exceeds the annual evaporation, a volume of water equivalent to the difference between annual precipitation falling on the treatment facility and the drainage area contributing surface runoff to the treatment facility and annual evaporation may be discharged subject to the limitations set forth in paragraph (a) of this section.

(d)(1) Except as provided in paragraph (d) of this section, there shall be no discharge of process wastewater to navigable waters from mills which extract gold or silver by use of the cyanidation process. The Agency recognizes that the elimination of the discharge of pollutants to navigable waters may result in an increase in discharges of some pollutants to other media. The Agency has considered these impacts and has addressed them in the preamble published on December 3, 1982.

(2) In the event that the annual precipitation falling on the treatment facility and the drainage area contributing surface runoff to the treatment

facility exceeds the annual evaporation, a volume of water equivalent to the difference between annual precipitation falling on the treatment facility and the drainage area contributing surface runoff to the treatment facility and annual evaporation may be discharged subject to the limitations set forth in paragraph (a) of this section.

(e) The concentration of pollutants discharged in mine drainage from mines producing 5,000 metric tons (5,512 short tons) or more of molybdenum bearing ores per year shall not exceed:

Effluent characteristic	Effluent limitations	
	Maximum for any 1 day	Average of daily values for 30 consecutive days
	Milligrams per liter	
TSS	30	20
Cd	.10	.05
Cu	.3	.15
Zn	1.0	.5
Pb	.6	.3
As	1.0	.5
pH	(1)	(1)

[1] Within the range of 6.0 to 9.0

(f) The concentration of pollutants discharged in mine drainage from mines producing less than 5,000 metric tons (5,512 short tons) or discharged from mills processing less than 5,000 metric tons (5,512 short tons) of molybdenum ores per year by methods other than ore leaching shall not exceed:

Effluent characteristic	Effluent limitations	
	Maximum for any 1 day	Average of daily values for 30 consecutive days
	Milligrams per liter	
TSS	50	30
pH	(1)	(1)

[1] Within the range 6.0 to 9.0.

(g) The concentration of pollutants discharged from mills processing 5,000 metric tons (5,512 short tons) or more of molybdenum ores per year by purely physical methods including ore crushing, washing, jigging, heavy media separation shall not exceed:

Effluent characteristic	Effluent limitations	
	Maximum for any 1 day	Average of daily value for 30 consecutive days
	Milligrams per liter	
TSS	30	20
Cd	.10	.05
Cu	.30	.15
Zn	1.0	.5
As	1.0	.5
pH	(1)	(1)

[1] Within the range 6.0 to 9.0

(h) The concentration of pollutants discharged from mills processing 5,000 metric tons (5,512 short tons) or more of molybdenum ores per year by froth flotation methods shall not exceed:

Effluent characteristics	Effluent limitations	
	Maximum for any 1 day	Average of daily values for 30 consecutive days
	Milligrams per liter	
TSS	30	20
Cd	.10	.05
Cu	.30	.15
Zn	1.0	.5
As	1.0	.5
pH	(1)	(1)

[1] Within the range 6.0 to 9.0.

[47 FR 54609, Dec. 3, 1982, as amended at 53 FR 18788, May 24, 1988]

§ 440.103 Effluent limitations representing the degree of effluent reduction attainable by the application of the best available technology economically achievable (BAT).

Except as provided in subpart L of this part and 40 CFR 125.30 through 125.32, any existing point source subject to this subpart must achieve the following effluent limitations representing the degree of effluent reduction attainable by the application of the best available technology economically achievable (BAT):

(a) The concentration of pollutants discharged in mine drainage from mines that produce copper, lead, zinc, gold, silver, or molybdenum bearing ores or any combination of these ores from open-pit or underground operations other than placer deposits shall not exceed:

Effluent characteristic	Effluent limitations	
	Maximum for any 1 day	Average of daily values for 30 consecutive days
	Milligrams per liter	
Cu	0.30	0.15
Zn	1.5	0.75
Pb	0.6	0.3
Hg	0.002	0.001
Cd	0.10	0.05

(b) The concentration of pollutants discharged from mills that use the froth-flotation process alone, or in conjunction with other processes, for the beneficiation of copper, lead, zinc, gold, silver, or molybdenum ores or any combination of these ores shall not exceed:

Effluent characteristic	Effluent limitations	
	Maximum for any 1 day	Average of daily values for 30 consecutive days
	Milligrams per liter	
Cu	0.30	0.15
Zn	1.0	0.5
Pb	0.6	0.3
Hg	0.002	0.001
Cd	0.10	0.05

(c)(1) Except as provided in paragraph (c) of this section, there shall be no discharge of process wastewater to navigable waters from mine areas and mills processes and areas that use dump, heap, in situ leach or vat-leach processes to extract copper from ores or ore waste materials. The Agency recognizes that the elimination of the discharge of pollutants to navigable waters may result in an increase in discharges of some pollutants to other media. The Agency has considered these impacts and has addressed them in the preamble published on December 3, 1982.

(2) In the event that the annual precipitation falling on the treatment facility and the drainage area contributing surface runoff to the treatment facility exceeds the annual evaporation, a volume of water equal to the difference between annual precipitation falling on the treatment facility and the drainage area contributing surface runoff to the treatment facility and annual evaporation may be discharged subject to the limitations set forth in paragraph (a) of this section.

(d)(1) Except as provided in paragraph (d) of this section, there shall be no discharge of process wastewater to navigable waters from mills that use the cyanidation process to extract gold or silver. The Agency recognizes that the elimination of the discharge of pollutants to navigable waters may result in an increase in discharges of some pollutants to other media. The Agency has considered these impacts and has addressed them in the preamble published on December 3, 1982.

(2) In the event that the annual precipitation falling on the treatment facility and the drainage area contributing surface runoff to the treatment facility exceeds the annual evaporation, a volume of water equal to the difference between annual precipitation falling on the treatment facility and the drainage area contributing surface runoff to the treatment facility and annual evaporation may be discharged subject to the limitations set forth in paragraph (a) of this section.

[47 FR 54609, Dec. 3, 1982, as amended at 53 FR 18788, May 24, 1988]

§ 440.104 New source performance standards (NSPS).

Except as provided in subpart L of this part any new source subject to this subsection must achieve the following NSPS representing the degree of effluent reduction attainable by the application of the best available demonstrated technology (BADT):

(a) The concentration of pollutants discharged in mine drainage from mines that produce copper, lead, zinc, gold, silver, or molybdenum bearing ores or any combination of these ores from open-pit or underground operations other than placer deposits shall not exceed:

Effluent characteristic	Effluent limitations	
	Maximum for any 1 day	Average of daily values for 30 consecutive days
	Milligrams per liter	
Cu	0.30	0.15
Zn	1.5	0.75
Pb	0.6	0.3
Hg	0.002	0.001
Cd	0.10	0.05
pH	(1)	(1)
TSS	30.0	20.0

[1] Within the range 6.0 to 9.0.

(b)(1) Except as provided in paragraph (b) of this section, there shall be no discharge of process wastewater to navigable waters from mills that use the froth-flotation process alone, or in conjunction with other processes, for the beneficiation of copper, lead, zinc, gold, silver, or molybdenum ores or any combination of these ores. The Agency recognizes that the elimination of the discharge of pollutants to navigable waters may result in an increase in discharges of some pollutants to other media. The Agency has considered these impacts and has addressed them in the preamble published on December 3, 1982.

(2)(i) In the event that the annual precipitation falling on the treatment facility and the drainage area contributing surface runoff to the treatment facility exceeds the annual evaporation, a volume of water equal to the difference between annual precipitation falling on the treatment facility and the drainage area contributing surface runoff to the treatment facility and annual evaporation may be discharged subject to the limitations set forth in paragraph (a) of this section.

(ii) In the event there is a build up of contaminants in the recycle water which significantly interferes with the ore recovery process and this interference can not be eliminated through appropriate treatment of the recycle water, the permitting authority may allow a discharge of process wastewater in an amount necessary to correct the interference problem after installation of appropriate treatment. This discharge shall be subject to the limitations of paragraph (a) of this section. The facility shall have the burden of demonstrating to the permitting authority that the discharge is necessary to eliminate interference in the ore recovery process and that the interference could not be eliminated through appropriate treatment of the recycle water.

(c)(1) Except as provided in paragraph (c) of this section, there shall be no discharge of process wastewater to navigable waters from mine areas and mills processes and areas that use dump, heap, in-situ leach or vat-leach processes to extract copper from ores or ore waste materials. The Agency recognizes that the elimination of the discharge of pollutants to navigable waters may result in an increase in discharges of some pollutants to other media. The Agency has considered these impacts and has addressed them in the preamble published on December 3, 1982.

(2) In the event that the annual precipitation falling on the treatment facility and the drainage area contributing surface runoff to the treatment facility exceeds the annual evaporation, a volume of water equal to the difference between annual precipitation falling on the treatment facility and the drainage area contributing surface runoff to the treatment facility and annual evaporation may be discharged subject to the limitations set forth in paragraph (a) of this section.

(d)(1) Except as provided in paragraph (d) of this section, there shall be no discharge of process wastewater to navigable waters from mills that use the cyanidation process to extract gold or silver. The Agency recognizes that the elimination of the discharge of pollutants to navigable waters may result in an increase in discharges of some pollutants to other media. The Agency has considered these impacts and has addressed them in the preamble published on December 3, 1982.

(2) In the event that the annual precipitation falling on the treatment facility and the drainage area contributing surface runoff to the treatment facility exceeds the annual evaporation, a volume of water equal to the difference between annual precipitation falling on the treatment facility and the drainage area contributing surface runoff to the treatment facility

and annual evaporation may be discharged subject to the limitations set forth in paragraph (a) of this section.

[47 FR 54609, Dec. 3, 1982, as amended at 53 FR 18788, May 24, 1988]

EFFECTIVE DATE NOTE: Paragraph (b)(2)(ii) of § 440.104 published at 47 FR 54609, Dec. 3, 1982, contains information collection requirements which will not become effective until Office of Management and Budget approval has been obtained.

§ 440.105 Effluent limitations representing the degree of effluent reduction attainable by the application of the best conventional pollutant control technology (BCT). [Reserved]

Subpart K—Platinum Ores Subcategory

§ 440.110 Applicability; description of the platinum ore subcategory.

The provisions of this subpart K are applicable to discharges from (a) mines that produce platinum ore and (b) mills that process platinum ore.

§ 440.111 [Reserved]

§ 440.112 Effluent limitations representing the degree of effluent reduction attainable by the application of the best practicable control technology currently available (BPT). [Reserved]

§ 440.113 Effluent limitations representing the degree of effluent reduction attainable by the application of the best available technology economically achievable (BAT).

Except as provided in subpart L of this part and 40 CFR 125.30 through 125.32, any existing point source subject to this subpart must achieve the following effluent limitations representing the degree of effluent reduction attainable by the application of the best available technology economically achievable (BAT):

(a) The concentration of pollutants discharged in mine drainage from mines that produce platinum bearing ores from open-pit or underground operations other than placer deposits shall not exceed:

Effluent characteristic	Effluent limitations	
	Maximum for any 1 day	Average of daily values for 30 consecutive days
	Milligrams per liter	
Cu	0.30	0.15
Zn	1.5	0.75
Pb	0.6	0.3
Hg	0.002	0.001
Cd	0.10	0.05

(b) The concentration of pollutants discharged from mills that use the froth-flotation process alone, or in conjunction with other processes, for the beneficiation of platinum ores shall not exceed:

Effluent characteristic	Effluent limitations	
	Maximum for any 1 day	Average of daily values for 30 consecutive days
	Milligrams per liter	
Cu	0.30	0.15
Zn	1.0	0.5
Pb	0.6	0.3
Hg	0.002	0.001
Cd	0.10	0.05

§ 440.114 New source performance standards (NSPS). [Reserved]

§ 440.115 Effluent limitations representing the degree of effluent reduction attainable by the application of the best conventional pollutant control technology (BTC). [Reserved]

Subpart L—General Provisions and Definitions

§ 440.130 Applicability.

Abbreviations and methods of analysis set forth in 40 CFR part 401 shall apply to part 440 except as provided in these general provisions and definitions. The general provisions and definitions in this subpart apply to all subparts of part 440 unless otherwise noted.

§ 440.131 General provisions.

(a) *Combined waste streams.* In the event that waste streams from various subparts or segments of subparts in part 440 are combined for treatment

and discharge, the quantity and concentration of each pollutant or pollutant property in the combined discharge that is subject to effluent limitations shall not exceed the quantity and concentration of each pollutant or pollutant property that could have been discharged had each waste stream been treated separately. In addition, the discharge flow from the combined discharge shall not exceed the volume that could have been discharged had each waste stream been treated separately.

(b) *Storm exemption for facilities permitted to discharge*. If, as a result of precipitation or snowmelt, a source with an allowable discharge under 40 CFR part 440 has an overflow or excess discharge of effluent which does not meet the limitations of 40 CFR part 440, the source may qualify for an exemption from such limitations with respect to such discharge if the following conditions are met:

(1) The facility is designed, constructed and maintained to contain the maximum volume of wastewater which would be generated by the facility during a 24-hour period without an increase in volume from precipitation and the maximum volume of wastewater resulting from a 10-year, 24-hour precipitation event or treat the maximum flow associated with these volumes. In computing the maximum volume of wastewater which would result from a 10-year, 24-hour precipitation event, the facility must include the volume which would result from all areas contributing runoff to the individual treatment facility, i.e., all runoff that is not diverted from the active mining area and runoff which is not diverted from the mill area.

(2) The facility takes all reasonable steps to maintain treatment of the wastewater and minimize the amount of overflow.

(3) The facility complies with the notification requirements of §122.60 (g) and (h). The storm exemption is designed to provide an affirmative defense to an enforcement action. Therefore, the operator has the burden of demonstrating to the appropriate authority that the above conditions have been met.

(c) *Storm exemption for facilities not permitted to discharge*. If, as a result of precipitation (rainfall or snowmelt), a source which is not permitted to discharge under 40 CFR part 440, has an overflow or discharge which violates the limitations of 40 CFR part 440, the source may qualify for an exemption from such limitations with respect to such discharge if the following conditions are met:

(1) The facility is designed, constructed, and maintained to contain the maximum volume of wastewater stored and contained by the facility during normal operating conditions without an increase in volume from precipitation and the maximum volume of wastewater resulting from a 10-year, 24-hour precipitation event. In computing the maximum volume of wastewater which would result from a 10-year, 24-hour precipitation event, the facility must include the volume which would result from all areas contributing runoff to the individual treatment facility, i.e., all runoff that is not diverted from the area or process subject to zero discharge, and other runoff that is allowed to commingle with the influent to the treatment system.

(2) The facility takes all reasonable steps to minimize the overflow or excess discharge.

(3) The facility complies with the notification requirements of §122.60(g) and (h). The storm exemption is designed to provide an affirmative defense to an enforcement action. Therefore, the operator has the burden of demonstrating to the appropriate authority that the above conditions have been met.

(d) *pH adjustment*. (1) Where the application of neutralization and sedimentation technology to comply with relevant metal limitations results in an inability to comply with the pH range of 6 to 9, the permit issuer may allow the pH level in the final effluent to slightly exceed 9.0 so that the copper, lead, zinc, mercury, and cadmium limitations will be achieved.

(2) In the case of a discharge into natural receiving waters for which the pH, if unaltered by human activities, is or would be less than 6.0 and approved water quality standards authorize such

lower pH, the pH limitations for the discharge may be adjusted downward to the pH water quality criterion for the receiving waters provided the other effluent limitations for the discharge are met. In no case shall a pH limitation below 5.0 be permitted.

(e) *Groundwater infiltration provision.* In the event a new source subject to a no discharge requirement can demonstrate that groundwater infiltration contributes a substantial amount of water to the tailing impoundment or wastewater holding facility, the permitting authority may allow the discharge of a volume of water equivalent to the amount of groundwater infiltration. This discharge shall be subject to the limitations for mine drainage applicable to the new source subcategory.

§ 440.132 General definitions.

(a) ''Active mining area'' is a place where work or other activity related to the extraction, removal, or recovery of metal ore is being conducted, except, with respect to surface mines, any area of land on or in which grading has been completed to return the earth to desired contour and reclamation work has begun.

(b) ''Annual precipitation'' and ''annual evaporation'' are the mean annual precipitation and mean annual lake evaporation, respectively, as established by the U.S. Department of Commerce, Environmental Science Services Administration, Environmental Data Services, or equivalent regional rainfall and evaporation data.

(c) ''Appropriate treatment of the recycle water'' in subpart J, § 440.104 includes, but is not limited to pH adjustment, settling and pH adjustment, settling, and mixed media filtration.

(d) ''Groundwater infiltration'' in § 440.131 means that water which enters the treatment facility as a result of the interception of natural springs, aquifers, or run-off which percolates into the ground and seeps into the treatment facility's tailings pond or wastewater holding facility and that cannot be diverted by ditching or grouting the tailings pond or wastewater holding facility.

(e) ''In-situ leach methods'' means the processes involving the purposeful introduction of suitable leaching solutions into a uranium ore body to dissolve the valuable minerals in place and the purposeful leaching of uranium ore in a static or semistatic condition either by gravity through an open pile, or by flooding a confined ore pile. It does not include the natural dissolution of uranium by ground waters, the incidental leaching of uranium by mine drainage, nor the rehabilitation of aquifiers and the monitoring of these aquifiers.

(f) ''Mill'' is a preparation facility within which the metal ore is cleaned, concentrated, or otherwise processed before it is shipped to the customer, refiner, smelter, or manufacturer. A mill includes all ancillary operations and structures necessary to clean, concentrate, or otherwise process metal ore, such as ore and gangue storage areas and loading facilities.

(g) ''Mine'' is an active mining area, including all land and property placed under, or above the surface of such land, used in or resulting from the work of extracting metal ore or minerals from their natural deposits by any means or method, including secondary recovery of metal ore from refuse or other storage piles, wastes, or rock dumps and mill tailings derived from the mining, cleaning, or concentration of metal ores.

(h) ''Mine drainage'' means any water drained, pumped, or siphoned from a mine.

(i) ''Ten (10)-year, 24-hour precipitation event'' is the maximum 24-hour precipitation event with a probable recurrence interval of once in 10 years as established by the U.S. Department of Commerce, National Oceanic and Atmospheric Administration, National Weather Service, or equivalent regional or rainfall probability information.

(j) ''U'' (Uranium) is measured by the procedure discussed in 40 CFR 141.25(b)(2), or an equivalent method.

Subpart M—Gold Placer Mine Subcategory

SOURCE: 53 FR 18788, May 24, 1988, unless otherwise noted.

§ 440.140 Applicability; description of the gold placer mine subcategory.

(a) The provisions of this subpart M are applicable to discharges from—

(1) Mines and dredges that produce gold or gold bearing ores from placer deposits; and

(2) The beneficiation processes which use gravity separation methods for recovering gold from placer deposits.

(b) The provisions of this subpart M are not applicable to any mines or beneficiation processes which process less than 1500 cubic yards (cu yd) of ore per year, or to dredges which process less than 50,000 cu yd of ore per year, or to dredges located in open waters (i.e., open bays, marine waters, or major rivers).

§ 440.141 Specialized definitions and provisions.

For the purpose of this subpart M, the general definitions, abbreviations, methods of analysis, and general provisions set forth in 40 CFR part 401 shall apply except as superseded by those below. The general provisions and definitions set forth in 40 CFR part 440, subpart L, shall not apply to this subpart.

(a) *Specialized definitions*. The following specialized definitions apply to this subpart only.

(1) ''Beneficiation area'' means the area of land used to stockpile ore immediately before the beneficiation process, the area of land used for the beneficiation process, the area of land used to stockpile the tailings immediately after the beneficiation process, and the area of land from the stockpiled tailings to the treatment system (e.g., holding pond or settling pond, and the area of the treatment system).

(2) ''Beneficiation process'' means the dressing or processing of gold bearing ores for the purpose of—

(i) Regulating the size of, or recovering, the ore or product,

(ii) Removing unwanted constituents from the ore, and

(iii) Improving the quality, purity, or assay grade of a desired product.

(3) ''Drainage water'' means incidental surface waters from diverse sources such as rainfall, snow melt or permafrost melt.

(4) ''Dredge'' means a self-contained combination of an elevating excavator (e.g., bucket line dredge), the beneficiation or gold-concentrating plant, and a tailings disposal plant, all mounted on a floating barge.

(5) ''Five (5) year, 6-hour precipitation event'' means the maximum 6-hour precipitation event with a probable recurrence interval of once in 5 years as established by the U.S. Department of Commerce, National Oceanic and Atmospheric Administration, National Weather Service, or equivalent regional or rainfall probability information.

(6) ''Gravity separation methods'' means the treatment of mineral particles which exploits differences between their specific gravities. The separation is usually performed by means of sluices, jigs, classifiers, spirals, hydrocyclones, or shaking tables.

(7) ''Infiltration water'' means that water which permeates through the earth into the plant site.

(8) ''Mine'' means a place where work or other activity related to the extraction or recovery of ore is performed.

(9) ''Mine area'' means the land area from which overburden is stripped and ore is removed prior to moving the ore to the beneficiation area.

(10) ''Mine drainage'' means any water drained, pumped or siphoned from a mine.

(11) ''New water'' means water from any discrete source such as a river, creek, lake or well which is deliberately allowed or brought into the plant site.

(12) ''Open cut mine'' means any form of recovery of ore from the earth except by a dredge.

(13) ''Ore'' means gold placer deposit consisting of metallic gold-bearing gravels, which may be: residual, from weathering of rocks in-situ; river gravels in active streams; river gravels in abandoned and often buried channels; alluvial fans; sea-beaches; and sea-beaches now elevated and inland. Ore is the raw ''bank run'' material measured in place, before being moved by mechanical or hydraulic means to a beneficiation process.

(14) ''Permit area'' means the area of land specified or referred to in an NPDES permit in which active mining

and related activities may occur that result in the discharge regulated under the terms of the permit. Usually this is specifically delineated in an NPDES permit or permit application, but in other cases may be ascertainable from an Alaska Tri-agency permit application or similar document specifying the mine location, mining plan and similar data.

(15) ''Plant site'' means the area occupied by the mine, necessary haulage ways from the mine to the beneficiation process, the beneficiation area, the area occupied by the wastewater treatment facilities and the storage areas for waste materials and solids removed from the wastewaters during treatment.

(16) ''Process wastewater'' means all water used in and resulting from the beneficiation process, including but not limited to the water used to move the ore to and through the beneficiation process, the water used to aid in classification, and the water used in gravity separation, mine drainage, and infiltration and drainage waters which commingle with mine drainage or waters resulting from the beneficiation process.

(17) ''Settleable solids'' means the particulate material (both organic or inorganic) which will settle in one hour expressed in milliliters per liter (ml/l) as determined using an Imhoff cone and the method described for Residue—Settleable in 40 CFR part 136.

(b) *Specialized provisions—storm exemption.* This specialized provision applies to this subpart M only. If, as a result of precipitation (rainfall or snowmelt), a source subject to this subpart has an overflow or discharge of effluent which does not meet the limitations or standards of this subpart, the source may qualify for an exemption from such limitations and standards with respect to such discharge if the following conditions are met:

(1) The treatment system is designed, constructed, and maintained to contain the maximum volume of untreated process wastewater which would be discharged, stored, contained and used or recycled by the beneficiation process into the treatment system during a 4-hour operating period without an increase in volume from precipitation or infiltration, plus the maximum volume of water runoff resulting from a 5-year, 6-hour precipitation event. In computing the maximum volume of water which would result from a 5-year, 6-hour precipitation event, the operator must include the volume which would result from the plant site contributing runoff to the individual treatment facility.

(2) The operator takes all reasonable steps to maintain treatment of the wastewater and minimize the amount of overflow.

(3) The source is in compliance with the BMP in § 140.148 and related provisions of its NPDES permit.

(4) The operator complies with the notification requirements of § 122.41 (m) and (n) of this title. The storm exemption is designed to provide an affirmative defense to an enforcement action. Therefore, the operator has the burden of demonstrating to the appropriate authority that the above conditions have been met.

§ 440.142 Effluent limitations representing the degree of effluent reduction attainable by the application of the best practicable control technology currently available (BPT).

Except as provided in 40 CFR 125.30—125.32, any existing point source subject to this subpart must achieve the following effluent limitations representing the degree of effluent reduction attainable by the application of the best practicable control technology currently available (BPT):

(a) The concentration of pollutants discharged in process wastewater from an open-cut mine plant site shall not exceed:

Effluent limitations	
Effluent characteristics	Instantaneous maximum
Settleable solids	0.2 ml/l

(b) The concentration of pollutants discharged in process wastewater from a dredge plant site shall not exceed:

Effluent characteristics	Effluent limitations—Instantaneous maximum
Settleable solids	0.2 ml/l

§ 440.143 Effluent limitations representing the degree of effluent reduction attainable by the application of the best available technology economically achievable (BAT).

Except as provided in 40 CFR 125.30–125.32, any existing point source subject to this subpart must achieve the following effluent limitations representing the degree of effluent reduction attainable by the application of the best available technology economically achievable (BAT).

(a) The volume of process wastewater which may be discharged from an open-cut mine plant site shall not exceed the volume of infiltration, drainage and mine drainage waters which is in excess of the make up water required for operation of the beneficiation process. The concentration of pollutants in process wastewaters discharged from an open-cut mine plant site shall not exceed:

Effluent characteristics	Effluent limitations—Instantaneous maximum
Settleable solids	0.2 ml/l

(b) The volume of process wastewater which may be discharged from a dredge plant site shall not exceed the volume of infiltration, drainage and mine drainage waters which is in excess of the make up water required for operation of the beneficiation process. The concentration of pollutants in process wastewater discharged from a dredge plant site shall not exceed:

Effluent characteristics	Effluent limitations—Instantaneous maximum
Settleable solids	0.2 ml/l

§ 440.144 New source performance standards (NSPS).

Any new source subject to this subpart must achieve the following NSPS representing the degree of effluent reduction attainable by the application of the best available demonstrated technology:

(a) The volume of process wastewater which may be discharged from an open-cut mine plant site shall not exceed the volume of infiltration, drainage and mine drainage waters which is in excess of the make up water required for operation of the beneficiation process. The concentration of pollutants in process wastewaters discharged from an open-cut mine plant site shall not exceed:

Effluent characteristics	Effluent limitations—Instantaneous maximum
Settleable solids	0.2 ml/l

(b) The volume of process wastewater which may be discharged from a dredge plant site shall not exceed the volume of infiltration, drainage and mine drainage waters which is in excess of the make up water required for operation of the beneficiation process. The concentration of pollutants in process wastewater discharged from a dredge plant site shall not exceed:

Effluent characteristics	Effluent limitations—Instantaneous maximum
Settleable solids	0.2 ml/l

(c) Notwithstanding any other provision of this chapter, the Regional Administrator or Director of a State agency with authority to administer the NPDES program shall in designating new source gold placer mines, take into account and base the decision on whether one or more of the following factors has occurred after May 24, 1988.

(1) The mine will operate outside of the permit area which is covered by a currently valid NPDES Permit.

(2) The mine significantly alters the nature or quantity of pollutants discharged.

(3) The mine discharges into a stream into which it has not discharged under its currently valid NPDES permit.

(4) The mine will operate in a permit area that has not been mined during the term of the currently valid NPDES permit.

(5) Such other factors as the Regional Administrator or state Director deems relevant.

§§ 440.145–440.147 [Reserved]

§ 440.148 Best Management Practices (BMP).

The following best management practices are specific requirements which shall be included in each NPDES permit for all mining operations regulated under this subpart to the greatest extent applicable in each such mining operation.

(a) *Surface water diversion:* The flow of surface waters into the plant site shall be interrupted and these waters diverted around and away from incursion into the plant site.

(b) *Berm construction:* Berms, including any pond walls, dikes, low dams and similar water retention structures shall be constructed in a manner such that they are reasonably expected to reject the passage of water.

(c) *Pollutant materials storage:* Measures shall be taken to assure that pollutant materials removed from the process water and wastewater streams will be retained in storge areas and not discharged or released to the waters of the United States.

(d) *New water control:* The amount of new water allowed to enter the plant site for use in ore processing shall be limited to the minimum amount required as make-up water for processing operations.

(e) *Maintenance of water control and solids retention devices:* All water control devices such as diversion structures and berms and all solids retention structures such as berms, dikes, pond structures and dams shall be maintained to continue their effectiveness and to protect from unexpected and catastrophic failure.

PART 442—TRANSPORTATION EQUIPMENT CLEANING POINT SOURCE CATEGORY

Sec.

442.1 General applicability.
442.2 General definitions.
442.3 General pretreatment standards.

Subpart A—Tank Trucks and Intermodal Tank Containers Transporting Chemical and Petroleum Cargos

442.10 Applicability.
442.11 Effluent limitations attainable by the application of the best practicable control technology currently available (BPT).
442.12 Effluent limitations attainable by the application of the best conventional pollutant control technology (BCT).
442.13 Effluent limitations attainable by the application of best available technology economically achievable (BAT).
442.14 New source performance standards (NSPS).
442.15 Pretreatment standards for existing sources (PSES).
442.16 Pretreatment standards for new sources (PSNS).

Subpart B—Rail Tank Cars Transporting Chemical and Petroleum Cargos

442.20 Applicability.
442.21 Effluent limitations attainable by the application of the best practicable control technology currently available (BPT).
442.22 Effluent limitations attainable by the application of the best conventional pollutant control technology (BCT).
442.23 Effluent limitations attainable by the application of best available technology economically achievable (BAT).
442.24 New source performance standards (NSPS).
442.25 Pretreatment standards for existing sources (PSES).
442.26 Pretreatment standards for new sources (PSNS).

Subpart C—Tank Barges and Ocean/Sea Tankers Transporting Chemical and Petroleum Cargos

442.30 Applicability.
442.31 Effluent limitations attainable by the application of the best practicable control technology currently available (BPT).
442.32 Effluent limitations attainable by the application of the best conventional pollutant control technology (BCT).
442.33 Effluent limitations attainable by the application of best available technology economically achievable (BAT).
442.34 New source performance standards (NSPS).
442.35 Pretreatment standards for existing sources (PSES).
442.36 Pretreatment standards for new sources (PSNS).

Subpart D—Tanks Transporting Food Grade Cargos

442.40 Applicability.

442.41 Effluent limitations attainable by the application of the best practicable control technology currently available (BPT).
442.42 Effluent limitations attainable by the application of the best conventional pollutant control technology (BCT).
442.43 Effluent limitations attainable by the application of best available technology economically achievable (BAT). [Reserved]
442.44 New source performance standards (NSPS).

AUTHORITY: 33 U.S.C. 1311, 1314, 1316, 1317, 1318, 1342 and 1361.

SOURCE: 65 FR 49700, Aug. 14, 2000, unless otherwise noted.

§ 442.1 General applicability.

(a) As defined more specifically in each subpart, and except for discharges specified in paragraph (b) of this section, this part applies to discharges resulting from cleaning the interior of tanks used to transport chemical, petroleum or food grade cargos. This part does not apply to facilities that clean only the exteriors of transportation equipment. Operations which may be subject to this part typically are reported under a wide variety of Standard Industrial Classification (SIC) codes. Several of the most common SIC codes include: SIC 7699, SIC 4741, or SIC 4491 (1987 SIC Manual).

(b) This part is not applicable to the following discharges:

(1) Wastewaters associated with tank cleanings operated in conjunction with other industrial, commercial, or Publicly Owned Treatment Works (POTW) operations, provided that the cleaning is limited to tanks that previously contained raw materials, by-products, or finished products that are associated with the facility's on-site processes.

(2) Wastewaters resulting from cleaning the interiors of drums, intermediate bulk containers, or closed-top hoppers.

(3) Wastewater from a facility that discharges less than 100,000 gallons per year of transportation equipment cleaning process wastewater.

§ 442.2 General definitions.

(a) In addition to the general definitions and abbreviations at 40 CFR part 401, the following definitions shall apply to this part:

Chemical cargos mean, but are not limited to, the following: latex, rubber, plastics, plasticizers, resins, soaps, detergents, surfactants, agricultural chemicals and pesticides, hazardous waste, organic chemicals including: alcohols, aldehydes, formaldehydes, phenols, peroxides, organic salts, amines, amides, other nitrogen compounds, other aromatic compounds, aliphatic organic chemicals, glycols, glycerines, and organic polymers; refractory organic compounds including: ketones, nitriles, organo-metallic compounds containing chromium, cadmium, mercury, copper, zinc; and inorganic chemicals including: aluminum sulfate, ammonia, ammonium nitrate, ammonium sulfate, and bleach. Cargos which are not considered to be food grade or petroleum cargos are considered to be chemical cargos.

Closed-top hopper means a completely enclosed storage vessel used to transport dry bulk cargos, either by truck, rail, or barge. Closed-top hoppers are not designed or constructed to carry liquid cargos and are typically used to transport grain, soybeans, soy meal, soda ash, lime, fertilizer, plastic pellets, flour, sugar, and similar commodities or cargos. The cargos transported come in direct contact with the hopper interior. Closed-top hoppers are also commonly referred to as dry bulk hoppers.

Drums mean metal or plastic cylindrical containers with either an open-head or a tight-head (also known as bung-type top) used to hold liquid, solid, or gaseous commodities or cargos which are in direct contact with the container interior. Drums typically range in capacity from 30 to 55 gallons.

Food grade cargos mean edible and non-edible food products. Specific examples of food grade cargos include, but are not limited to, the following: alcoholic beverages, animal by-products, animal fats, animal oils, caramel, caramel coloring, chocolate, corn syrup and other corn products, dairy products, dietary supplements, eggs, flavorings, food preservatives, food products that are not suitable for human consumption, fruit juices, honey, lard, molasses, non-alcoholic beverages, sweeteners, tallow, vegetable oils, and vinegar.

Heel means any material remaining in a tank following unloading, delivery, or discharge of the transported cargo. Heels may also be referred to as container residue, residual materials or residuals.

Intermediate bulk container (''IBC'' or ''Tote'') means a completely enclosed storage vessel used to hold liquid, solid, or gaseous commodities or cargos which are in direct contact with the container interior. IBCs may be loaded onto flat beds for either truck or rail transport, or onto ship decks for water transport. IBCs are portable containers with 450 liters (119 gallons) to 3000 liters (793 gallons) capacity. IBCs are also commonly referred to as totes or tote bins.

Intermodal tank container means a completely enclosed storage vessel used to hold liquid, solid, or gaseous commodities or cargos which come in direct contact with the tank interior. Intermodal tank containers may be loaded onto flat beds for either truck or rail transport, or onto ship decks for water transport. Containers larger than 3000 liters capacity are considered intermodal tank containers. Containers smaller than 3000 liters capacity are considered IBCs.

Ocean/sea tanker means a self or non-self-propelled vessel constructed or adapted to transport liquid, solid or gaseous commodities or cargos in bulk in cargo spaces (or tanks) through oceans and seas, where the commodity or cargo carried comes in direct contact with the tank interior. There are no maximum or minimum vessel or tank volumes.

On-site means within the contiguous and non-contiguous established boundaries of a facility.

Petroleum cargos mean products of the fractionation or straight distillation of crude oil, redistillation of unfinished petroleum derivatives, cracking, or other refining processes. For purposes of this rule, petroleum cargos also include products obtained from the refining or processing of natural gas and coal. For purposes of this rule, specific examples of petroleum products include but are not limited to: asphalt; benzene; coal tar; crude oil; cutting oil; ethyl benzene; diesel fuel; fuel additives; fuel oils; gasoline; greases; heavy, medium, and light oils; hydraulic fluids, jet fuel; kerosene; liquid petroleum gases (LPG) including butane and propane; lubrication oils; mineral spirits; naphtha; olefin, paraffin, and other waxes; tall oil; tar; toluene; xylene; and waste oil.

Pollution Prevention Allowable Discharge for this subpart means the quantity of/concentrations of pollutants in wastewaters being discharged to publicly owned treatment works after a facility has demonstrated compliance with the Pollutant Management Plan provisions in §§ 442.15(b), 442.16(b), 442.25(b), or 442.26(b) of this part.

Prerinse/presteam means a rinse, typically with hot or cold water, performed at the beginning of the cleaning sequence to remove residual material from the tank interior.

Presolve wash means the use of diesel, kerosene, gasoline, or any other type of fuel or solvent as a tank interior cleaning solution.

Rail Tank Car means a completely enclosed storage vessel pulled by a locomotive that is used to transport liquid, solid, or gaseous commodities or cargos over railway access lines. A rail tank car storage vessel may have one or more storage compartments and the stored commodities or cargos come in direct contact with the tank interior. There are no maximum or minimum vessel or tank volumes.

Tank barge means a non-self-propelled vessel constructed or adapted primarily to carry liquid, solid or gaseous commodities or cargos in bulk in cargo spaces (or tanks) through rivers and inland waterways, and may occasionally carry commodities or cargos through oceans and seas when in transit from one inland waterway to another. The commodities or cargos transported are in direct contact with the tank interior. There are no maximum or minimum vessel or tank volumes.

Tank truck means a motor-driven vehicle with a completely enclosed storage vessel used to transport liquid, solid or gaseous materials over roads and highways. The storage vessel or tank may be detachable, as with tank trailers, or permanently attached. The commodities or cargos transported come in direct contact with the tank

interior. A tank truck may have one or more storage compartments. There are no maximum or minimum vessel or tank volumes. Tank trucks are also commonly referred to as cargo tanks or tankers.

Transportation equipment cleaning (TEC) process wastewater means all wastewaters associated with cleaning the interiors of tanks including: tank trucks; rail tank cars; intermodal tank containers; tank barges; and ocean/sea tankers used to transport commodities or cargos that come into direct contact with the interior of the tank or container. At those facilities that clean tank interiors, TEC process wastewater also includes wastewater generated from washing vehicle exteriors, equipment and floor washings, TEC-contaminated stormwater, wastewater prerinse cleaning solutions, chemical cleaning solutions, and final rinse solutions. TEC process wastewater is defined to include only wastewater generated from a regulated TEC subcategory. Therefore, TEC process wastewater does not include wastewater generated from cleaning hopper cars, or from food grade facilities discharging to a POTW. Wastewater generated from cleaning tank interiors for purposes of shipping products (i.e., cleaned for purposes other than maintenance and repair) is considered TEC process wastewater. Wastewater generated from cleaning tank interiors for the purposes of maintenance and repair on the tank is not considered TEC process wastewater. Facilities that clean tank interiors solely for the purposes of repair and maintenance are not regulated under this Part.

(b) The parameters regulated in this part and listed with approved methods of analysis in Table IB at 40 CFR 136.3, are defined as follows:

(1) *BOD_5* means 5-day biochemical oxygen demand.

(2) *Cadmium* means total cadmium.

(3) *Chromium* means total chromium.

(4) *Copper* means total copper.

(5) *Lead* means total lead.

(6) *Mercury* means total mercury

(7) *Nickel* means total nickel.

(8) *Oil and Grease (HEM)* means oil and grease (Hexane-Extractable Material) measured by Method 1664.

(9) *Non-polar material (SGT–HEM)* means the non-polar fraction of oil and grease (Silica Gel Treated Hexane-Extractable Material) measured by Method 1664.

(10) *TSS* means total suspended solids.

(11) *Zinc* means total zinc.

(c) The parameters regulated in this part and listed with approved methods of analysis in Table IC at 40 CFR 136.3, are as follows:

(1) Fluoranthene.

(2) Phenanthrene.

§ 442.3 General pretreatment standards.

Any source subject to this part that introduces process wastewater pollutants into a publicly owned treatment works (POTW) must comply with 40 CFR part 403.

Subpart A—Tank Trucks and Intermodal Tank Containers Transporting Chemical and Petroleum Cargos

§ 442.10 Applicability.

This subpart applies to discharges resulting from the cleaning of tank trucks and intermodal tank containers which have been used to transport chemical or petroleum cargos.

§ 442.11 Effluent limitations attainable by the application of the best practicable control technology currently available (BPT).

Except as provided in 40 CFR 125.30 through 125.32, any existing point source subject to this subpart must achieve the following effluent limitations representing the application of BPT:

(a) Effluent Limitations

Regulated parameter	Maximum daily [1]	Maximum monthly avg.[1]
BOD_5	61	22
TSS	58	26
Oil and grease (HEM)	36	16
Copper	0.84	.....
Mercury	0.0031	.....
pH	([2])	([2])

[1] Mg/L (ppm)

[2] Within 6 to 9 at all times.

§ 442.12 Effluent limitations attainable by the application of the best conventional pollutant control technology (BCT).

Except as provided in 40 CFR 125.30 through 125.32, any existing point source subject to this subpart must achieve the following effluent limitations representing the application of BCT: Limitations for BOD_5, TSS, oil and grease (HEM) and pH are the same as the corresponding limitation specified in § 442.11.

§ 442.13 Effluent limitations attainable by the application of best available technology economically achievable (BAT).

Except as provided in 40 CFR 125.30 through 125.32, any existing point source subject to this subpart must achieve the following effluent limitations representing the application of BAT: Limitations for copper, mercury, and oil and grease (HEM) are the same as the corresponding limitation specified in § 442.11.

§ 442.14 New source performance standards (NSPS).

Any new point source subject to this subpart must achieve the following performance standards: Standards for BOD_5, TSS, oil and grease (HEM), copper, mercury, and pH are the same as the corresponding limitation specified in § 442.11.

§ 442.15 Pretreatment standards for existing sources (PSES).

(a) Except as provided in 40 CFR 403.7 and 403.13 or in paragraph (b) of this section, no later than August 14, 2003, any existing source subject to this subpart which introduces pollutants into a publicly owned treatment works must achieve PSES as follows:

TABLE—PRETREATMENT STANDARDS

Regulated parameter	Maximum daily [1]
Non-polar material (SGT–HEM)	26
Copper	0.84
Mercury	0.0031

[1] Mg/L (ppm).

(b) As an alternative to achieving PSES as defined in paragraph (a) of this section, any existing source subject to paragraph (a) of this section may have a pollution prevention allowable discharge of wastewater pollutants, as defined in § 442.2, if the source agrees to control mechanism with the control authority as follows:

(1) The discharger shall prepare a Pollutant Management Plan that satisfies the requirements as specified in paragraph (b)(5) of this section, and the discharger shall conduct its operations in accordance with that plan.

(2) The discharger shall notify its local control authority prior to renewing or modifying its individual control mechanism or pretreatment agreement of its intent to achieve the pollution prevention allowable discharge pretreatment standard by submitting to the local control authority a certification statement of its intent to utilize a Pollutant Management Plan as specified in paragraph (b)(1) of this section. The certification statement must be signed by the responsible corporate officer as defined in 40 CFR 403.12(l);

(3) The discharger shall submit a copy of its Pollutant Management Plan as described in paragraph (b)(1) of this section to the appropriate control authority at the time he/she applies to renew, or modify its individual control mechanism or pretreatment agreement; and

(4) The discharger shall maintain at the offices of the facility and make available for inspection the Pollutant Management Plan as described in paragraph (b)(1) of this section.

(5) The Pollutant Manager Plan shall include:

(i) Procedures for identifying cargos, the cleaning of which is likely to result in discharges of pollutants that would be incompatible with treatment at the POTW;

(ii) For cargos identified as being incompatible with treatment at the POTW, the Plan shall provide that heels be fully drained, segregated from other wastewaters, and handled in an appropriate manner;

(iii) For cargos identified as being incompatible with treatment at the POTW, the Plan shall provide that the tank be prerinsed or presteamed as appropriate and the wastewater segregated from wastewaters to be discharged to the POTW and handled in

an appropriate manner, where necessary to ensure that they do not cause or contribute to a discharge that would be incompatible with treatment at the POTW;

(iv) All spent cleaning solutions, including interior caustic washes, interior presolve washes, interior detergent washes, interior acid washes, and exterior acid brightener washes shall be segregated from other wastewaters and handled in an appropriate manner, where necessary to ensure that they do not cause or contribute to a discharge that would be incompatible with treatment at the POTW;

(v) Provisions for appropriate recycling or reuse of cleaning agents;

(vi) Provisions for minimizing the use of toxic cleaning agents (solvents, detergents, or other cleaning or brightening solutions);

(vii) Provisions for appropriate recycling or reuse of segregated wastewaters (including heels and prerinse/pre-steam wastes);

(viii) Provisions for off-site treatment or disposal, or effective pre-treatment of segregated wastewaters (including heels, prerinse/pre-steam wastes, spent cleaning solutions);

(ix) Information on the volumes, content, and chemical characteristics of cleaning agents used in cleaning or brightening operations; and

(x) Provisions for maintaining appropriate records of heel management procedures, prerinse/pre-steam management procedures, cleaning agent management procedures, operator training, and proper operation and maintenance of any pre-treatment system;

§ 442.16 Pretreatment standards for new sources (PSNS).

(a) Except as provided in 40 CFR 403.7 and 403.13 or in paragraph (b) of this section, any new source subject to this subpart which introduces pollutants into a publicly owned treatment works must achieve PSNS as follows:

TABLE—PRETREATMENT STANDARDS

Regulated parameter	Maximum daily [1]
Non-polar material (SGT–HEM)	26
Copper	0.84
Mercury	0.0031

[1] Mg/L (ppm).

(b) As an alternative to achieving PSNS as defined in paragraph (a) of this section, any existing source subject to paragraph (a) of this section may have a pollution prevention allowable discharge of wastewater pollutants, as defined in § 442.2, if the source agrees to a control mechanism with the control authority as follows:

(1) The discharger shall prepare a Pollutant Management Plan that satisfies the requirements as specified in paragraph (b)(5) of this section, and the discharger shall conduct its operations in accordance with that plan.

(2) The discharger shall notify its local control authority prior to obtaining, renewing, or modifying its individual control mechanism or pretreatment agreement of its intent to achieve the pollution prevention allowable discharge pretreatment standard by submitting to the local control authority a certification statement of its intent to utilize a Pollutant Management Plan as specified in paragraph (b)(1) of this section. The certification statement must be signed by the responsible corporate officer as defined in 40 CFR 403.12(l);

(3) The discharger shall submit a copy of its Pollutant Management Plan as described in paragraph (b)(1) of this section to the appropriate control authority at the time he/she applies to renew, or modify its individual control mechanism or pretreatment agreement; and

(4) The discharger shall maintain at the offices of the facility and make available for inspection the Pollutant Management Plan as described in paragraph (b)(1) of this section.

(5) The Pollutant Management Plan shall include:

(i) Procedures for identifying cargos, the cleaning of which is likely to result in discharges of pollutants that would be incompatible with treatment at the POTW;

(ii) For cargos identified as being incompatible with treatment at the POTW, the Plan shall provide that heels be fully drained, segregated from other wastewaters, and handled in an appropriate manner;

(iii) For cargos identified as being incompatible with treatment at the POTW, the Plan shall provide that the

tank be prerinsed or presteamed as appropriate and the wastewater segregated from wastewaters to be discharged to the POTW and handled in an appropriate manner, where necessary to ensure that they do not cause or contribute to a discharge that would be incompatible with treatment at the POTW;

(iv) All spent cleaning solutions, including interior caustic washes, interior presolve washes, interior detergent washes, interior acid washes, and exterior acid brightener washes shall be segregated from other wastewaters and handled in an appropriate manner, where necessary to ensure that they do not cause or contribute to a discharge that would be incompatible with treatment at the POTW;

(v) Provisions for appropriate recycling or reuse of cleaning agents;

(vi) Provisions for minimizing the use of toxic cleaning agents (solvents, detergents, or other cleaning or brightening solutions);

(vii) Provisions for appropriate recycling or reuse of segregated wastewaters (including heels and prerinse/pre-steam wastes);

(viii) Provisions for off-site treatment or disposal, or effective pre-treatment of segregated wastewaters (including heels, prerinse/pre-steam wastes, spent cleaning solutions);

(ix) Information on the volumes, content, and chemical characteristics of cleaning agents used in cleaning or brightening operations; and

(x) Provisions for maintaining appropriate records of heel management procedures, prerinse/pre-steam management procedures, cleaning agent management procedures, operator training, and proper operation and maintenance of any pre-treatment system;

Subpart B—Rail Tank Cars Transporting Chemical and Petroleum Cargos

§ 442.20 Applicability.

This subpart applies to discharges resulting from the cleaning of rail tank cars which have been used to transport chemical or petroleum cargos.

§ 442.21 Effluent limitations attainable by the application of the best practicable control technology currently available (BPT).

Except as provided in 40 CFR 125.30 through 125.32, any existing point source subject to this subpart must achieve the following effluent limitations representing the application of BPT:

TABLE—EFFLUENT LIMITATIONS

Regulated parameter	Maximum daily [1]	Maximum monthly avg.[1]
BOD_5	61	22
TSS	58	26
Oil and grease (HEM)	36	16
Fluoranthene	0.076	
Phenanthrene	0.34	
pH	([2])	([2])

[1] Mg/L (ppm).
[2] Within 6 to 9 at all times.

§ 442.22 Effluent limitations attainable by the application of the best conventional pollutant control technology (BCT).

Except as provided in 40 CFR 125.30 through 125.32, any existing point source subject to this subpart must achieve the following effluent limitations representing the application of BCT: Limitations for BOD_5, TSS, oil and grease (HEM) and pH are the same as the corresponding limitation specified in § 442.21.

§ 442.23 Effluent limitations attainable by the application of best available technology economically achievable (BAT).

Except as provided in 40 CFR 125.30 through 125.32, any existing point source subject to this subpart must achieve the following effluent limitations representing the application of BAT: Limitations for fluoranthene, phenanthrene, and oil and grease (HEM) are the same as the corresponding limitation specified in § 442.21.

§ 442.24 New source performance standards (NSPS).

Any new point source subject to this subpart must achieve the following performance standards: Standards for BOD_5, TSS, oil and grease (HEM), fluoranthene, phenanthrene and pH are the

same as the corresponding limitation specified in § 442.21.

§ 442.25 Pretreatment standards for existing sources (PSES).

(a) Except as provided in 40 CFR 403.7 and 403.13 or in paragraph (b) of this section, no later than August 14, 2003 any existing source subject to this subpart which introduces pollutants into a publicly owned treatment works must achieve PSES as follows:

TABLE—PRETREATMENT STANDARDS'

Regulated parameter	Maximum daily[1]
Non-polar material (SGT–HEM)	26
Fluoranthene	0.076
Phenanthrene	0.34

[1] Mg/L (ppm).

(b) As an alternative to achieving PSES as defined in paragraph (a) of this section, any existing source subject to paragraph (a) of this section may have a pollution prevention allowable discharge of wastewater pollutants, as defined in § 442.2, if the source agrees to a control mechanism with the control authority as follows:

(1) The discharger shall prepare a Pollutant Management Plan that satisfies the requirements as specified in paragraph (b)(5) of this section, and the discharger shall conduct its operations in accordance with that plan.

(2) The discharger shall notify its local control authority prior to renewing or modifying its individual control mechanism or pretreatment agreement of its intent to achieve the pollution prevention allowable discharge pretreatment standard by submitting to the local control authority a certification statement of its intent to utilize a Pollutant Management Plan as specified in paragraph (b)(1) of this section. The certification statement must be signed by the responsible corporate officer as defined in 40 CFR 403.12(l);

(3) The discharger shall submit a copy of its Pollutant Management Plan as described in paragraph (b)(1) of this section to the appropriate control authority at the time he/she applies to renew, or modify its individual control mechanism or pretreatment agreement; and

(4) The discharger shall maintain at the offices of the facility and make available for inspection the Pollutant Management Plan as described in paragraph (b)(1) of this section.

(5) The Pollutant Management Plan shall include:

(i) Procedures for identifying cargos, the cleaning of which is likely to result in discharges of pollutants that would be incompatible with treatment at the POTW;

(ii) For cargos identified as being incompatible with treatment at the POTW, the Plan shall provide that heels be fully drained, segregated from other wastewaters, and handled in an appropriate manner;

(iii) For cargos identified as being incompatible with treatment at the POTW, the Plan shall provide that the tank be prerinsed or presteamed as appropriate and the wastewater segregated from wastewaters to be discharged to the POTW and handled in an appropriate manner, where necessary to ensure that they do not cause or contribute to a discharge that would be incompatible with treatment at the POTW;

(iv) All spent cleaning solutions, including interior caustic washes, interior presolve washes, interior detergent washes, interior acid washes, and exterior acid brightener washes shall be segregated from other wastewaters and handled in an appropriate manner, where necessary to ensure that they do not cause or contribute to a discharge that would be incompatible with treatment at the POTW;

(v) Provisions for appropriate recycling or reuse of cleaning agents;

(vi) Provisions for minimizing the use of toxic cleaning agents (solvents, detergents, or other cleaning or brightening solutions);

(vii) Provisions for appropriate recycling or reuse of segregated wastewaters (including heels and prerinse/pre-steam wastes);

(viii) Provisions for off-site treatment or disposal, or effective pre-treatment of segregated wastewaters (including heels, prerinse/pre-steam wastes, spent cleaning solutions);

(ix) Information on the volumes, content, and chemical characteristics of cleaning agents used in cleaning or brightening operations; and

(x) Provisions for maintaining appropriate records of heel management procedures, prerinse/pre-steam management procedures, cleaning agent management procedures, operator training, and proper operation and maintenance of any pre-treatment system;

§ 442.26 Pretreatment standards for new sources (PSNS).

(a) Except as provided in 40 CFR 403.7 and 403.13 or in paragraph (b) of this section, any new source subject to this subpart which introduces pollutants into a publicly owned treatment works must achieve PSNS as follows:

TABLE—PRETREATMENT STANDARDS

Regulated parameter	Maximum daily[1]
Non-polar material (SGT–HEM)	26
Fluoranthene	0.076
Phenanthrene	0.34

[1] Mg/L (ppm).

(b) As an alternative to achieving PSNS as defined in paragraph (a) of this section, any new source subject to paragraph (a) of this section may have a pollution prevention allowable discharge of wastewater pollutants, as defined in § 442.2, if the source agrees to a control mechanism with the control authority as follows:

(1) The discharger shall prepare a Pollutant Management Plan that satisfies the requirements as specified in paragraph (b)(5) of this section, and the discharger shall conduct its operations in accordance with that plan.

(2) The discharger shall notify its local control authority prior to obtaining, renewing, or modifying its individual control mechanism or pretreatment agreement of its intent to achieve the pollution prevention allowable discharge pretreatment standard by submitting to the local control authority a certification statement of its intent to utilize a Pollutant Management Plan as specified in paragraph (b)(1) of this section. The certification statement must be signed by the responsible corporate officer as defined in 40 CFR 403.12(l);

(3) The discharger shall submit a copy of its Pollutant Management Plan as described in paragraph (b)(1) of this section to the appropriate control authority at the time he/she applies to obtain, renew, or modify its individual control mechanism or pretreatment agreement; and

(4) The discharger shall maintain at the offices of the facility and make available for inspection the Pollutant Management Plan as described in paragraph (b)(1) of this section.

(5) The Pollutant Management Plan shall include:

(i) Procedures for identifying cargos, the cleaning of which is likely to result in discharges of pollutants that would be incompatible with treatment at the POTW;

(ii) For cargos identified as being incompatible with treatment at the POTW, the Plan shall provide that heels be fully drained, segregated from other wastewaters, and handled in an appropriate manner;

(iii) For cargos identified as being incompatible with treatment at the POTW, the Plan shall provide that the tank be prerinsed or presteamed as appropriate and the wastewater segregated from wastewaters to be discharged to the POTW and handled in an appropriate manner, where necessary to ensure that they do not cause or contribute to a discharge that would be incompatible with treatment at the POTW;

(iv) All spent cleaning solutions, including interior caustic washes, interior presolve washes, interior detergent washes, interior acid washes, and exterior acid brightener washes shall be segregated from other wastewaters and handled in an appropriate manner, where necessary to ensure that they do not cause or contribute to a discharge that would be incompatible with treatment at the POTW;

(v) Provisions for appropriate recycling or reuse of cleaning agents;

(vi) Provisions for minimizing the use of toxic cleaning agents (solvents, detergents, or other cleaning or brightening solutions);

(vii) Provisions for appropriate recycling or reuse of segregated wastewaters (including heels and prerinse/pre-steam wastes);

(viii) Provisions for off-site treatment or disposal, or effective pre-treatment of segregated wastewaters (including heels, prerinse/pre-steam wastes, spent cleaning solutions);

(ix) Information on the volumes, content, and chemical characteristics of cleaning agents used in cleaning or brightening operations; and

(x) Provisions for maintaining appropriate records of heel management procedures, prerinse/pre-steam management procedures, cleaning agent management procedures, operator training, and proper operation and maintenance of any pre-treatment system;

Subpart C—Tank Barges and Ocean/Sea Tankers Transporting Chemical and Petroleum Cargos

§ 442.30 Applicability.

This subpart applies to discharges resulting from the cleaning of tank barges or ocean/sea tankers which have been used to transport chemical or petroleum cargos.

§ 442.31 Effluent limitations attainable by the application of the best practicable control technology currently available (BPT).

Except as provided in 40 CFR 125.30 through 125.32, any existing point source subject to this subpart must achieve the following effluent limitations representing the application of BPT:

TABLE—EFFLUENT LIMITATIONS

Regulated parameter	Maximum daily[1]	Maximum monthly avg.[1]
BOD_5	61	22
TSS	58	26
Oil and grease (HEM)	36	16
Cadmium	0.020	.....
Chromium	0.42	.....
Copper	0.10	.....
Lead	0.14	.....
Mercury	0.0013	.....
Nickel	0.58	.....
Zinc	8.3	.....
pH	([2])	([2])

[1] Mg/L (ppm).
[2] Within 6 to 9 at all times.

§ 442.32 Effluent limitations attainable by the application of the best conventional pollutant control technology (BCT).

Except as provided in 40 CFR 125.30 through 125.32, any existing point source subject to this subpart must achieve the following effluent limitations representing the application of BCT: Limitations for BOD_5, TSS, oil and grease (HEM) and pH are the same as the corresponding limitation specified in § 442.31.

§ 442.33 Effluent limitations attainable by the application of best available technology economically achievable (BAT).

Except as provided in 40 CFR 125.30 through 125.32, any existing point source subject to this subpart must achieve the following effluent limitations representing the application of BAT: Limitations for cadmium, chromium, copper, lead, mercury, nickel, and zinc are the same as the corresponding limitation specified in § 442.31.

§ 442.34 New source performance standards (NSPS).

Any new point source subject to this subpart must achieve the following performance standards: Standards for BOD_5, TSS, oil and grease (HEM), cadmium, chromium, copper, lead, mercury, nickel, zinc and pH are the same as the corresponding limitation specified in § 442.31.

§ 442.35 Pretreatment standards for existing sources (PSES).

Except as provided in 40 CFR 403.7 and 403.13, any existing source subject to this subpart must achieve the following pretreatment standards:

TABLE—PRETREATMENT STANDARDS

Regulated parameter	Maximum daily[1]
Non-polar material (SGT–HEM)	26
Cadmium	0.020
Chromium	0.42
Copper	0.10
Lead	0.14
Mercury	0.0013
Nickel	0.58
Zinc	8.3

[1] Mg/L (ppm).

§ 442.36 Pretreatment standards for new sources (PSNS).

Except as provided in 40 CFR 403.7, any new source subject to this subpart must achieve the following pretreatment standards: Standards for non-polar materials (SGT–HEM), cadmium, chromium, copper, lead, mercury, nickel and zinc are the same as the corresponding standard specified in § 442.35.

Subpart D—Tanks Transporting Food Grade Cargos

§ 442.40 Applicability.

This subpart applies to discharges resulting from the cleaning of tank trucks, intermodal tank containers, rail tank cars, tank barges and ocean/sea tankers which have been used to transport food grade cargos. If wastewater generated from cleaning tanks used to transport food grade cargos is mixed with wastewater resulting from cleaning tanks used to transport chemical or petroleum cargos, then the combined wastewater is subject to the provisions established for the corresponding tanks (i.e., truck, railcar or barge) in Subparts A, B, or C of this part.

§ 442.41 Effluent limitations attainable by the application of the best practicable control technology currently available (BPT).

Except as provided in 40 CFR 125.30 through 125.32, any existing point source subject to this subpart must achieve the following effluent limitations representing the application of BPT:

TABLE—EFFLUENT LIMITATIONS

Regulated parameter	Maximum daily[1]	Maximum monthly avg.[1]
BOD_5	56	24
TSS	230	86
Oil and grease (HEM)	20	8.8
pH	([2])	([2])

[1] Mg/L (ppm).
[2] Within 6 to 9 at all times.

§ 442.42 Effluent limitations attainable by the application of the best conventional pollutant control technology (BCT).

Except as provided in 40 CFR 125.30 through 125.32, any existing point source subject to this subpart must achieve the following effluent limitations representing the application of BCT: Limitations for BOD_5, TSS, oil & grease (HEM) and pH are the same as the corresponding limitation specified in § 442.41.

§ 442.43 Effluent limitations attainable by the application of best available technology economically achievable (BAT). [Reserved]

§ 442.44 New source performance standards (NSPS).

Any new point source subject to this subpart must achieve the following performance standards: Standards for BOD_5, TSS, oil and grease (HEM) and pH are the same as the corresponding limitation specified in § 442.41.

PART 443—EFFLUENT LIMITATIONS GUIDELINES FOR EXISTING SOURCES AND STANDARDS OF PERFORMANCE AND PRETREATMENT STANDARDS FOR NEW SOURCES FOR THE PAVING AND ROOFING MATERIALS (TARS AND ASPHALT) POINT SOURCE CATEGORY

Subpart A—Asphalt Emulsion Subcategory

Sec.

443.10 Applicability; description of the asphalt emulsion subcategory.
443.11 Specialized definitions.
443.12 Effluent limitations guidelines representing the degree of effluent reduction attainable by the application of the best practicable control technology currently available.
443.13 Effluent limitations guidelines representing the degree of effluent reduction attainable by the application of the best available technology economically achievable.
443.14 [Reserved]
443.15 Standards of performance for new sources.
443.16 Pretreatment standards for new sources.

Subpart B—Asphalt Concrete Subcategory

443.20 Applicability; description of the asphalt concrete subcategory.
443.21 Specialized definitions.
443.22 Effluent limitations guidelines representing the degree of effluent reduction attainable by the application of the best practicable control technology currently available.
443.23 Effluent limitations guidelines representing the degree of effluent reduction attainable by the application of the best available technology economically achievable.
443.24 [Reserved]
443.25 Standards of performance for new sources.
443.26 Pretreatment standard for new sources.

Subpart C—Asphalt Roofing Subcategory

443.30 Applicability; description of the asphalt roofing subcategory.
443.31 Specialized definitions.
443.32 Effluent limitations guidelines representing the degree of effluent reduction attainable by the application of the best practicable control technology currently available.
443.33 Effluent limitations guidelines representing the degree of effluent reduction attainable by the application of the best available technology economically achievable.
443.34 [Reserved]
443.35 Standards of performance for new sources.
443.36 Pretreatment standard for new sources.

Subpart D—Linoleum and Printed Asphalt Felt Subcategory

443.40 Applicability; description of the linoleum and printed asphalt felt subcategory.
443.41 Specialized definitions.
443.42 Effluent limitations guidelines representing the degree of effluent reduction attainable by the application of the best practicable control technology currently available.
443.43 Effluent limitations guidelines representing the degree of effluent reduction attainable by the application of the best available technology economically achievable.
443.44 [Reserved]
443.45 Standards of performance for new sources.
443.46 Pretreatment standards for new sources.

AUTHORITY: Secs. 301, 304 (b) and (c), 306 (b) and (c) and 307(c), Federal Water Pollution Control Act, as amended (the Act); 33 U.S.C. 1251, 1311, 1314 (b) and (c), 1316 (b) and (c), 1317(c), 86 Stat. 816 *et seq.;* Pub. L. 92–500.

SOURCE: 40 FR 31191, July 24, 1975, unless otherwise noted.

Subpart A—Asphalt Emulsion Subcategory

§ 443.10 Applicability; description of the asphalt emulsion subcategory.

The provisions of this subpart are applicable to discharges resulting from the production of asphalt paving and roofing emulsions.

§ 443.11 Specialized definitions.

For the purpose of this subpart:

(a) Except as provided below, the general definitions, abbreviations and methods of analysis set forth in part 401 of this chapter shall apply to this subpart.

(b) The term ''production area size'' shall mean that area in which the oxidation towers, loading facilities, and all buildings that house product processes are located.

(c) The term ''process wastewater pollutants'' shall mean any pollutants present in the process wastewaters and rainwater runoff.

§ 443.12 Effluent limitations guidelines representing the degree of effluent reduction attainable by the application of the best practicable control technology currently available.

Except as provided in §§ 125.30 through 125.32, any existing point source subject to this subpart shall achieve the following effluent limitations representing the degree of effluent reduction attainable by the application of the best practicable control technology currently available (BPT):

Effluent characteristic	Effluent limitations	
	Maximum for any 1 day	Average of daily values for 30 consecutive days shall not exceed—
	Metric units (kg/cu m of runoff)	
Oil and grease	0.020	0.015
pH	(1)	(1)
	English units (lb/1,000 gal of runoff)	
Oil and grease	0.167	0.125
pH	(1)	(1)

[1] Within the range 6.0 to 9.0.

[40 FR 31191, July 24, 1975, as amended at 60 FR 33969, June 29, 1995]

§ 443.13 Effluent limitations guidelines representing the degree of effluent reduction attainable by the application of the best available technology economically achievable.

The following limitations establish the quantity or quality of pollutants or pollutant properties, controlled by this section, which may be discharged by a point source subject to the provisions of this subpart after application of the best available technology economically achievable:

Effluent characteristic	Effluent limitations	
	Maximum for any 1 day	Average of daily values for 30 consecutive days shall not exceed—
	Metric units (kg/cu m of runoff)	
TSS	0.023	0.015
Oil and grease	0.015	0.010
pH	(1)	(1)
	English units (lb/1,000 gal of runoff)	
TSS	0.188	0.125
Oil and grease	0.125	0.083
pH	(1)	(1)

[1] Within the range 6.0 to 9.0.

§ 443.14 [Reserved]

§ 443.15 Standards of performance for new sources.

The following standards of performance establish the quantity or quality of pollutants or pollutant properties, controlled by this section, which may be discharged by a new source subject to the provisions of this subpart:

Effluent characteristic	Effluent limitations	
	Maximum for any 1 day	Average of daily values for 30 consecutive days shall not exceed—
	Metric units (kg/cu m of runoff)	
TSS	0.023	0.015
Oil and grease	0.015	0.010
pH	(1)	(1)
	English units (lb/1,000 gal of runoff)	
TSS	0.188	0.125
Oil and grease	0.125	0.083
pH	(1)	(1)

[1] Within the range 6.0 to 9.0.

§ 443.16 Pretreatment standards for new sources.

Any new source subject to this subpart that introduces process wastewater pollutants into a publicly owned treatment works must comply with 40 CFR part 403. In addition, the following pretreatment standard establishes the quantity or quality of pollutants or pollutant properties controlled by this section which may be discharged to a publicly owned treatment works by a new source subject to the provisions of this subpart:

Pollutant or pollutant property	Pretreatment standard
BOD5	No limitation.
TSS	Do.
pH	Do.
Oil and grease	100 mg/l.

[40 FR 31191, July 24, 1975, as amended at 60 FR 33969, June 29, 1995]

Subpart B—Asphalt Concrete Subcategory

§ 443.20 Applicability; description of the asphalt concrete subcategory.

The provisions of this subpart are applicable to discharges resulting from the production of asphalt concrete.

§ 443.21 Specialized definitions.

For the purpose of this subpart:

(a) Except as provided below, the general definitions, abbreviations and methods of analysis set forth in part

401 of this chapter shall apply to this subpart.

(b) The term ''process wastewater'' shall mean any water which, during the manufacturing process, comes into direct contact with any raw material, intermediate product, by-product, or product used in or resulting from the production of paving asphalt concrete.

(c) The term ''process wastewater pollutants'' shall mean any pollutants present in the process wastewater.

§ 443.22 Effluent limitations guidelines representing the degree of effluent reduction attainable by the application of the best practicable control technology currently available.

Except as provided in §§ 125.30 through 125.32, any existing point source subject to this subpart shall achieve the following effluent limitations representing the degree of effluent reduction attainable by the application of the best practicable control technology currently available (BPT): There shall be no discharge of process waste water pollutants to navigable waters.

[60 FR 33969, June 29, 1995]

§ 443.23 Effluent limitations guidelines representing the degree of effluent reduction attainable by the application of the best available technology economically achievable.

The following limitations establish the quantity or quality of pollutants or pollutant properties which may be discharged by a point source subject to the provisions of this subpart after application of the best available technology economically achievable: There shall be no discharge of process wastewater pollutants to navigable waters.

§ 443.24 [Reserved]

§ 443.25 Standards of performance for new sources.

The following standards of performance establish the quantity or quality of pollutants or pollutant properties which may be discharged by a new source subject to the provisions of this subpart: There shall be no discharge of process wastewater pollutants to navigable waters.

§ 443.26 Pretreatment standard for new sources.

Any new source subject to this subpart that introduces process wastewater pollutants into a publicly owned treatment works must comply with 40 CFR part 403. In addition, the following pretreatment standard establishes the quantity or quality of pollutants or pollutant properties controlled by this section which may be discharged to a publicly owned treatment works by a new source subject to the provisions of this subpart:

Pollutant or pollutant property	Pretreatment standard
BOD5	No limitation.
TSS	Do.
pH	Do.
Oil and grease	100 mg/l.

[40 FR 31191, July 24, 1975, as amended at 60 FR 33969, June 29, 1995]

Subpart C—Asphalt Roofing Subcategory

§ 443.30 Applicability; description of the asphalt roofing subcategory.

The provisions of this subpart are applicable to discharges resulting from the production of asphalt roofing materials.

§ 443.31 Specialized definitions.

For the purpose of this subpart:

(a) Except as provided below, the general definitions, abbreviations and methods of analysis set forth in part 401 of this chapter shall apply to this subpart.

(b) The term ''process wastewater'' shall mean any water which, during the manufacturing process, comes into direct contact with any raw material, intermediate product, by-product, or product used in or resulting from the production of asphalt roofing materials.

(c) The term ''process wastewater pollutants'' shall mean any pollutants present in the process wastewater.

§ 443.32 Effluent limitations guidelines representing the degree of effluent reduction attainable by the application of the best practicable control technology currently available.

Except as provided in §§ 125.30 through 125.32, any existing point source subject to this subpart shall achieve the following effluent limitations representing the degree of effluent reduction attainable by the application of the best practicable control technology currently available (BPT):

Effluent characteristic	Effluent limitations	
	Maximum for any 1 day	Average of daily values for 30 consecutive days shall not exceed—
	Metric units (kg/kkg of product)	
TSS	0.056	0.038
pH	(1)	(1)
	English units (lb/1,000 lb of product)	
TSS	0.056	0.038
pH	(1)	(1)

[1] Within the range 6.0 to 9.0.

[40 FR 31191, July 24, 1975, as amended at 60 FR 33969, June 29, 1995]

§ 443.33 Effluent limitations guidelines representing the degree of effluent reduction attainable by the application of the best available technology economically achievable.

The following limitations establish the quantity or quality of pollutants or pollutant properties, controlled by this section, which may be discharged by a point source subject to the provisions of this subpart after application of the best available technology economically achievable:

Effluent characteristic	Effluent limitations	
	Maximum for any 1 day	Average of daily values for 30 consecutive days shall not exceed—
	Metric units (kg/kkg of product)	
TSS	0.028	0.019
pH	(1)	(1)
	English units (lb/1,000 lb of product)	
TSS	0.028	0.019
pH	(1)	(1)

[1] Within the range 6.0 to 9.0.

§ 443.34 [Reserved]

§ 443.35 Standards of performance for new sources.

The following standards of performance establish the quantity or quality of pollutants or pollutant properties, controlled by this section, which may be discharged by a new source subject to the provisions of this subpart:

Effluent characteristic	Effluent limitations	
	Maximum for any 1 day	Average of daily values for 30 consecutive days shall not exceed—
	Metric units (kg/kkg of product)	
TSS	0.028	0.019
pH	(1)	(1)
	English units (lb/1,000 lb of product)	
TSS	0.028	0.019
pH	(1)	(1)

[1] Within the range 6.0 to 9.0.

§ 443.36 Pretreatment standard for new sources.

Any new source subject to this subpart that introduces process wastewater pollutants into a publicly owned treatment works must comply with 40 CFR part 403. In addition, the following pretreatment standard establishes the quantity or quality of pollutants or pollutant properties controlled by this section which may be discharged to a publicly owned treatment works by a new source subject to the provisions of this subpart:

Pollutant or pollutant property	Pretreatment standard
BOD5	No limitation.
TSS	Do.
pH	Do.
Oil and grease	100 mg/l.

[40 FR 31191, July 24, 1975, as amended at 60 FR 33969, June 29, 1995]

Subpart D—Linoleum and Printed Asphalt Felt Subcategory

§ 443.40 Applicability; description of the linoleum and printed asphalt felt subcategory.

The provisions of this subpart are applicable to discharges resulting from the production of Linoleum and Printed Asphalt Felt floor coverings.

§ 443.41 Specialized definitions.

For the purpose of this subpart:

(a) Except as provided below, the general definitions, abbreviations and methods of analysis set forth in part 401 of this chapter shall apply to this subpart.

(b) The term ''process wastewater'' shall mean any water which, during the manufacturing process, comes into direct contact with any raw material, intermediate product, by-product, or product used in or resulting from the production of linoleum and printed asphalt felt floor coverings.

(c) The term ''process wastewater pollutants'' shall mean any pollutants present in the process wastewater.

§ 443.42 Effluent limitations guidelines representing the degree of effluent reduction attainable by the application of the best practicable control technology currently available.

Except as provided in §§ 125.30 through 125.32, any existing point source subject to this subpart shall achieve the following effluent limitations representing the degree of effluent reduction attainable by the application of the best practicable control technology currently available (BPT):

Effluent characteristic	Effluent limitations	
	Maximum for any 1 day	Average of daily values for 30 consecutive days shall not exceed—
	Metric units (kg/kkg of product)	
TSS	0.038	0.025
pH	(1)	(1)
	English units (lb/1,000 lb of product)	
TSS	0.038	0.025
pH	(1)	(1)

[1] Within the range 6.0 to 9.0.

[40 FR 31191, July 24, 1975, as amended at 60 FR 33970, June 29, 1995]

§ 443.43 Effluent limitations guidelines representing the degree of effluent reduction attainable by the application of the best available technology economically achievable.

The following limitations establish the quantity or quality of pollutants or pollutant properties, controlled by this section, which may be discharged by a point source subject to the provisions of this subpart after application of the best available technology economically achievable:

Effluent characteristic	Effluent limitations	
	Maximum for any 1 day	Average of daily values for 30 consecutive days shall not exceed—
	Metric units (kg/kkg of product)	
TSS	0.019	0.013
pH	(1)	(1)
	English units (lb/1,000 lb of product)	
TSS	0.019	0.013
pH	(1)	(1)

[1] Within the range 6.0 to 9.0.

§ 443.44 [Reserved]

§ 443.45 Standards of performance for new sources.

The following standards of performance establish the quantity or quality of pollutants or pollutant properties, controlled by this section, which may

be discharged by a new source subject to the provisions of this subpart:

Effluent characteristic	Effluent limitations	
	Maximum for any 1 day	Average of daily values for 30 consecutive days shall not exceed—
	Metric units (kg/kkg of product)	
pH	(1)	(1)
	English units (lb/1,000 lb of product)	
TSS	0.019	0.013
pH	(1)	(1)

[1] Within the range 6.0 to 9.0.

§ 443.46 Pretreatment standard for new sources.

Any new source subject to this subpart that introduces process wastewater pollutants into a publicly owned treatment works must comply with 40 CFR part 403. In addition, the following pretreatment standard establishes the quantity or quality of pollutants or pollutant properties controlled by this section which may be discharged to a publicly owned treatment works by a new source subject to the provisions of this subpart:

Pollutant or pollutant property	Pretreatment standard
BOD5	No limitation.
TSS	Do.
pH	Do.
Oil and grease	100 mg/l.

[40 FR 31191, July 24, 1975, as amended at 60 FR 33970, June 29, 1995]

PART 444—WASTE COMBUSTORS POINT SOURCE CATEGORY

Subpart A—Commercial Hazardous Waste Combustor Subcategory

Sec.

444.10 Applicability.
444.11 Definitions.
444.12 Monitoring requirements.
444.13 Effluent limitations attainable by the application of the best practical control technology currently available (BPT).
444.14 Effluent limitations attainable by the application of the best conventional pollutant control technology (BCT).
444.15 Effluent limitations attainable by the application of the best available technology economically achievable (BAT).
444.16 Pretreatment standards for existing sources (PSES).
444.17 New source performance standards (NSPS).
444.18 Pretreatment standards for new sources (PSNS).

AUTHORITY: Secs. 301, 304, 306, 307, 308, 402, and 501 of the Clean Water Act, as amended; 33 U.S.C. 1311, 1314, 1316, 1317, 1318, 1342, and 1361.

SOURCE: 65 FR 4381, Jan. 27, 2000, unless otherwise noted.

Subpart A—Commercial Hazardous Waste Combustor Subcategory

§ 444.10 Applicability.

(a) The provisions of this part apply only to that portion of wastewater discharges that are associated with Commercial Hazardous Waste Combustor (CHWC) wastewater.

(b) The discharge from a CHWC of wastewater that is not CHWC wastewater, may be subject to other applicable provisions of EPA's CWA effluent guidelines and standards regulations at Subchapter N of Title 40 of the Code of Federal Regulations.

§ 444.11 Definitions.

As used in this part the general definitions and abbreviations in 40 CFR part 401 shall apply.

Commercial hazardous waste combustor means any thermal unit, except a cement kiln, that is subject either to 40 CFR part 264, subpart O; 40 CFR part 265, subpart O; or 40 CFR part 266, subpart H if the thermal unit burns RCRA hazardous wastes received from off-site for a fee or other remuneration in the following circumstances. The thermal unit is a commercial hazardous waste combustor if the off-site wastes are generated at a facility not under the same corporate structure or subject to the same ownership as the thermal unit and

(1) The thermal unit is burning wastes that are not of a similar nature to wastes being burned from industrial processes on site or

(2) There are no wastes being burned from industrial processes on site. Examples of wastes of a ''similar nature'' may include the following: Wastes generated in industrial operations whose wastewaters are subject to the same provisions in 40 CFR Subchapter N or wastes burned as part of a product stewardship activity. The term commercial hazardous waste combustor includes the following facilities: a facility that burns exclusively waste received from off-site; and, a facility that burns both wastes generated on-site and wastes received from off-site. Facilities that may be commercial hazardous waste combustors include hazardous waste incinerators, rotary kiln incinerators, lime kilns, lightweight aggregate kilns, and boilers. A facility not otherwise a commercial hazardous waste combustor is not a commercial hazardous waste combustor if it burns RCRA hazardous waste for charitable organizations, as a community service or as an accommodation to local, state or government agencies so long as the waste is burned for no fee or other remuneration.

Commercial hazardous waste combustor wastewater means wastewater attributable to commercial waste combustion operations, but includes only wastewater from air pollution control systems and water used to quench flue gas or slag generated as a result of commercial hazardous waste combustor operations.

Off-site means outside the boundaries of a facility.

On-site means within the boundaries of a facility.

Parameters are defined as Parameters at 40 CFR 136.2 in Table 1B, which also cites the approved methods of analysis.

(1) *Arsenic* means total arsenic, Parameter 6.

(2) *Cadmium* means total cadmium, Parameter 12.

(3) *Chromium* means total chromium, Parameter 19.

(4) *Copper* means total copper, Parameter 22.

(5) *Lead* means total lead, Parameter 32.

(6) *Mercury* means total mercury, Parameter 35.

(7) *pH* means hydrogen ion, Parameter 28.

(8) *Silver* means total silver, Parameter 62.

(9) *Titanium* means total titanium, Parameter 72.

(10) *TSS* means total suspended solids, Parameter 55.

(11) *Zinc* means total zinc, Parameter 75.

POTW means a publicly owned treatment works.

§ 444.12 Monitoring Requirements

(a) Both direct and indirect discharges must monitor to establish compliance with their limitations and standards. Thus, all the permits of all direct dischargers must include requirements to monitor, according to EPA-approved test procedures, each pollutant limited in the permit, the volume of effluent discharged from each outfall, and other appropriate measurements subject to notification requirements. See 40 CFR 122.44(i). EPA's pretreatment regulations similarly require indirect dischargers to monitor to demonstrate compliance with pretreatment standards. See 40 CFR 403.12(g).

(b) Incorporation by reference:

(1) Compliance with the monitoring requirements may be accomplished using approved test procedures listed in the table to this paragraph. Most of these test procedures have previously been incorporated by reference at 40 CFR 136.3(a), Table IB. The test procedures for the regulated pollutants (arsenic, cadmium, chromium (total), copper, pH, lead, mercury, TSS, silver, titanium, and zinc) listed in the table to this paragraph are also incorporated by reference into this regulation. The full texts of the test procedures listed in this paragraph are available from the sources indicated in paragraph (b)(2) of this section. In addition to those test procedures incorporated by reference at 40 CFR 136.3(a), Table IB, you may also use EPA Method 200.8, ''Determination of Trace Elements in Water and Wastes by Inductively Coupled Plasma-Mass Spectrometry,'' from ''Methods for Determination of Metals in Environmental Samples—Supplement I,'' EPA–600/R–94–111, May 1994, and ASTM Method D 5673–96, ''Standard Test Method for Elements in Water by Inductively Coupled Plasma—Mass

Spectrometry,'' from 1999 Annual Book of ASTM Standards, for determination of arsenic, cadmium, chromium (total), copper, lead, silver, and zinc. The full texts of these methods are incorporated by reference into this regulation and may be obtained from the sources identified in paragraph (b)(2) of this section.

LIST OF APPROVED INORGANIC TEST PROCEDURES

Parameter, units and method	Reference (method number or page)				
	EPA [1 16]	Standard Methods [18th Edition] [6]	ASTM	USGS [2]	Other
1. Arsenic—Total,[4] mg/L:					
Digestion [4] followed by	206.5				
AA gaseous hydride	206.3	3114B 4.d	D2972–93(B)	I–3062–85	
AA furnace	206.2	3113B	D2972–93(C)		
ICP/AES [15]	[5] 200.7	3120 B			
Colorimetric (SDDC), or	206.4	3500–As C	D2972–93(A)	I–3060–85	
ICP/MS	[7] 200.8		D5673–96 [17]		
2. Cadmium—Total,[4] mg/L; Digestion [4] followed by:					
AA direct aspiration [15]	213.1	3111 B or C	D3557–90(A or B)	I–3135–85 or I–3136–85	974.27,[3] p. 37.
AA furnace	213.2	3113 B	D3557–90(D)		
ICP/AES [15]	[5] 200.7	3120 B			
DCP [15]	.....		D4190—82(88)	I–1472–85	([14])
Voltametry [9]	.....				
Colorimetric (Dithizone), or	.....	3500–Cd D	D3557–90(C)		
ICP/MS	[7] 200.8		D5673–96 [17]		
3. Chromium-Total,[4] mg/L; Digestion [4] followed by:					
AA direct aspiration [15]	218.1	3111 B	D1687–92(B)	I–3236–85	974.27.[3]
AA chelation-extraction	218.3	3111 C			
AA furnace	218.2	3113 B	D1687–92(C)		
ICP/AES [15]	[5] 200.7	3120 B			
DCP [15]	.....		D4190–82(88)		([14])
Colorimetric (Diphenylcarbazide), or	.....	3500–Cr D			
ICP/MS	[7] 200.8		D5673–96 [17]		
4. Copper—Total,[4] mg/L; Digestion [4] followed by:					
AA direct aspiration [15]	220.1	3111 B or C	D1688–90(A or B)	I–3270–85 or I–3271–85	974.27 [3] p. 37.[8]
AA furnace	220.2	3113 B	D1688–90(C)		
ICP/AES [15]	[5] 200.7	3120 B			
DCP [15] or	.....		D4190–82(88)		([14])
Colorimetric (Neocuproine) or	.....	3500–Cu D			
(Bicinchoninate), or	.....	or E			([10])
ICP/MS	[7] 200.8		D5673–96 [17]		
5. Hydrogen ion (pH), pH units:					
Electrometric measurement	150.1	4500–H+B	D1293–84 (90)(A or B)	I–1586–85	973.41.
Automated electrode	.....				([11])
6. Lead—Total,[4] mg/L; Digestion [4] followed by:					
AA direct aspiration [15]	239.1	3111 B or C	D3559–90(A or B)	I–3399–85	974.27.[3]
AA furnace	239.2	3113 B	D3559–90(D)		
ICP/AES [15]	[5] 200.7	3120 B			
DCP [15]	.....		D4190–82(88)		([14])
Voltametry [9]	.....		D3559–90(C)		
Colorimetric (Dithizone), or	.....	3500–Pb D			
ICP/MS	[7] 200.8		D5673–96 [17]		
7. Mercury—Total,[4] mg/L:					

LIST OF APPROVED INORGANIC TEST PROCEDURES—Continued

Parameter, units and method	Reference (method number or page)				
	EPA [1 16]	Standard Methods [18th Edition] [6]	ASTM	USGS [2]	Other
Cold vapor, manual or	245.1	3112 B	D3223–91	I–3462–85	977.22.[3]
Automated	245.1				
8. Residue—nonfilterable (TSS), mg/L:					
Gravimetric, 103–105– post washing of residue	160.2	2540 D		I–3765–85	
9. Silver—Total,[4] mg/L: Digestion [4,12] followed by:					
AA direct aspiration	272.1	3111 B or C		I–3720–85	974.27 [3] p. 37. [8]
AA furnace	272.2	3113 B			
ICP/AES	[5] 200.7	3120 B			
DCP, or					([14])
ICP/MS	[7] 200.8		D5673–96 [17]		
10. Titanium—Total,[4] mg/L; Digestion [4] followed by:					
AA direct aspiration	283.1	3111 D			
AA furnace, or	283.2				
DCP					([14])
11. Zinc—Total,[4] mg/L; Digestion [4] followed by:					
AA direct aspiration [15]	289.1	3111 B or C	D1691–90(A) or B)	I–3900–85	974.27,[3] p. 37.[8]
AA furnace	289.2				
ICP/AES [15]	[5] 200.7	3120 B			
DCP [15]			D4190–82(88)		([14])
Colorimetric (Dithizone) or		3500–Zn E			
(Zincon), or		3500–Zn F			([13])
ICP/MS	[7] 200.8		D5673–96 [17]		

Table Notes:

[1] ''Methods for Chemical Analysis of Water and Wastes,'' Environmental Protection Agency, Environmental Monitoring Systems Laboratory—Cincinnati (EMSL–CI), EPA–600/4–79–020, Revised March 1983 and 1979 where applicable.

[2] Fishman, M.J., et al. ''Methods for Analysis of Inorganic Substances in Water and Fluvial Sediments,'' U.S. Department of the Interior, Techniques of Water—Resource Investigations of the U.S. Geological Survey, Denver, CO, Revised 1989.

[3] ''Official Methods of Analysis of the Association of Official Analytical Chemists,'' methods manual, 15th ed. (1990).

[4] For the determination of total metals the sample is not filtered before processing. A digestion procedure is required to solubilize suspended material and to destroy possible organic-metal complexes. Two digestion procedures are given in ''Methods for Chemical Analysis of Water and Wastes, 1979 and 1983''. One (Section 4.1.3), is a vigorous digestion using nitric acid. A less vigorous digestion using nitric and hydrochloric acids (Section 4.1.4) is preferred; however, the analyst should be cautioned that this mild digestion may not suffice for all samples types. Particularly, if a colorimetric procedure is to be employed, it is necessary to ensure that all organo-metallic bonds be broken so that the metal is in a reactive state. In those situations, the vigorous digestion is to be preferred making certain that at no time does the sample go to dryness. Samples containing large amounts of organic materials may also benefit by this vigorous digestion, however, vigorous digestion with concentrated nitric acid will convert antimony and tin to insoluble oxides and render them unavailable for analysis. Use of ICP/AES as well as determinations for certain elements such as antimony, arsenic, the noble metals, mercury, selenium, silver, tin, and titanium require a modified sample digestion procedure and in all cases the method write-up should be consulted for specific instructions and/or cautions. NOTE.—If the digestion procedure for direct aspiration AA included in one of the other approved references is different than the above, the EPA procedure must be used.

Dissolved metals are defined as those constituents which will pass through a 0.45 micron membrane filter. Following filtration of the sample, the referenced procedure for total metals must be followed. Sample digestion of the filtrate for dissolved metals (or digestion of the original sample solution for total metals) may be omitted for AA (direct aspiration or graphite furnace) and ICP analyses, provided the sample solution to be analyzed meets the following criteria:

a. Has a low COD (<20)

b. Is visibly transparent with a turbidity measurement of 1 NTU or less

c. Is colorless with no perceptible odor, and

d. Is of one liquid phase and free of particulate or suspended matter following acidification.

[5] EPA Method 200.7, ''Inductively Coupled Plasma Atomic Emission Spectrometric Method for Trace Element Analysis of Water and Wastes,'' from ''Methods for Determination of Metals in Environmental Samples—Supplement I,'' EPA–600/R–94–111, May 1994.

[6] ''Standard Methods for the Examination of Water and Wastewater,'' 18th Edition (1992).

[7] EPA Method 200.8, ''Determination of Trace Elements in Waters and Wastes by Inductively Coupled Plasma-Mass Spectrometry,'' from ''Methods for Determination of Metals in Environmental Samples—Supplement I,'' EPA–600/R–94–111, May 1994.

[8] American National Standard on Photographic Processing Effluents, Apr. 2, 1975. Available from ANSI, 1430 Broadway, New York, NY 10018.

[9] The use of normal and differential pulse voltage ramps to increase sensitivity and resolution is acceptable.

[10] Copper, Biocinchoinate Method, Method 8506, Hach Handbook of Water Analysis, 1979, Hach Chemical Company, PO Box 389, Loveland, CO 80537.

[11] Hydrogen ion (pH) Automated Electrode Method, Industrial Method Number 378—75WA, October 1976, Bran & Luebbe (Technicon) Autoanalyzer II. Bran & Luebbe Analyzing Technologies, Inc., Elmsford, NY 10523.

[12] Approved methods for the analysis of silver in industrial wastewaters at concentrations of 1 mg/L and above are inadequate where silver exists as an inorganic halide. Silver halides such as the bromide and chloride are relatively insoluble in reagents such as nitric acid but are readily soluble in an aqueous buffer of sodium thiosulfate and sodium hydroxide to pH of 12. Therefore, for levels of silver above 1 mg/L, 20 mL of sample should be diluted to 100 mL by adding 40 mL each of 2 M $Na_2S_2O_3$ and NaOH. Standards should be prepared in the same manner. For levels of silver below 1 mg/L the approved method is satisfactory.

[13] Zinc, Zincon Method, Method 8009, Hach Handbook of Water Analysis, 1979, pages 2–231 and 2–333, Hach Chemical Company, Loveland, CO 80537.

[14] ''Direct Current Plasma (DCP) Optical Emission Spectrometric Method for Trace Elemental Analysis of Water and Wastes, Method AES0029,'' 1986—Revised 1991, Thermo Jarrell Ash Corporation, 27 Forge Parkway, Franklin, MA 02038.

[15] ''Closed Vessel Microwave Digestion of Wastewater Samples for Determination of Metals,'' CEM Corporation, PO. Box 200, Matthews, NC 28106–0200, April 16, 1992. Available from the CEM Corporation.

[16] Precision and recovery statements for the atomic absorption direct aspiration and graphite furnace methods, and for the spectrophotometric SDDC method for arsenic are provided in Appendix D of 40 CFR Part 136 and titled, ''Precision and Recovery Statements for Methods for Measuring Metals.''

[17] This method does not include the digestion for solids given in Method 200.8. Not using the solids digestion procedure could affect the determined concentrations. Therefore, this method may not be used for analysis of aqueous samples with suspended solids greater than 1%.

(2) The full texts of the methods from the following references which are cited in the table in paragraph (b)(1) of this section are incorporated by reference into this regulation and may be obtained from the sources identified. All costs cited are subject to change and must be verified from the indicated sources. The full texts of all the test procedures cited are available for inspection at the Analytical Methods Staff, Office of Water, U.S. Environmental Protection Agency, 1200 Pennsylvania Ave., NW., Washington, DC 20460 or at the Office of the Federal Register, 800 North Capital Street, NW., Suite 700, Washington DC.

APPENDIX TO § 444.12(B)—REFERENCES, SOURCES, COSTS, AND TABLE CITATIONS:

(1) ''Methods for Chemical Analysis of Water and Wastes,'' U.S. Environmental Protection Agency, EPA–600/4–79–020, Revised March 1983 and 1979 where applicable. Available from: ORD Publications, CERI, U.S. Environmental Protection Agency, Cincinnati, Ohio 45268. [Note 1]

(2) ''Standard Methods for the Examination of Water and Wastewater.'' Joint Editorial Board, American Public Health Association, American Water Works Association, and Water Environment Federation, 18th Edition, 1992. Available from: American Public Health Association, 1015 15th Street NW, Washington, DC 20005. [Note 6]

(3) ''Annual Book of ASTM Standards—Water and Environmental Technology,'' Section 11, Volumes 11.01 (Water I) and 11.02 (Water II), 1994. [1996 for D5673–96; see Note 17]. American Society for Testing and Materials, 1916 Race Street, Philadelphia, PA 19103.

(4) ''Methods for the Determination of Metals in Environmental Samples—Supplement I'', National Exposure Risk Laboratory, Office of Research and Development, U.S. Environmental Protection Agency, Cincinnati, OH 45268, EPA 600 R–94/111, May 1994. [Notes 5 and 7]

(5) ''Methods for Determination of Inorganic Substances in Water and Fluvial Sediments,'' by M.J. Fishman and Linda C. Friedman, Techniques of Water Resources Investigations of the U.S. Geological Survey, Book 5 Chapter A1 (1989). Available from: U.S. Geological Survey, Denver Federal Center, Box 25425, Denver, CO 80225. Cost: $108.75 (subject to change). [Note 2]

(6) ''Closed Vessel Microwave Digestion of Wastewater Samples for Determination of Metals,'' CEM Corporation, P.O. Box 200, Matthews, North Carolina 28106–0200, April 16, 1992. Available from the CEM Corporation. [Note 15]

(7) ''Official Methods of Analysis of AOAC—International, 15th Edition,'' 1990. Price: $359.00. Available from: AOAC—International, 1970 Chain Bridge Rd., Dept. 0742, McLean, VA 22109–0742. [Note 3]

(8) ''American National Standard on Photographic Processing Effluents,'' April 2, 1975. Available from: American National Standards Institute, 11 West 42nd Street, New York, New York 10036. [Note 8]

(9) Bicinchoninate Method for Copper. Method 8506, Hach Handbook of Water Analysis, 1979, Method and price available from Hach Chemical Company, P.O. Box 300, Loveland, Colorado 80537. [Note 10]

(10) Hydrogen Ion (pH) Automated Electrode Method, Industrial Method Number 378–75WA. October 1976. Bran & Luebbe (Technicon) Auto Analyzer II. Method and price available from Bran & Luebbe Analyzing Technologies, Inc. Elmsford, N.Y. 10523. [Note 11]

(11) Zincon Method for Zinc, Method 8009. Hach Handbook for Water Analysis, 1979. Method and price available from Hach Chemical Company, P.O. Box 389, Loveland, Colorado 80537. [Note 13]

(12) ''Direct Current Plasma (DCP) Optical Emission Spectrometric Method for Trace Elemental Analysis of Water and Wastes,'' Method AES 0029, 1986 Revised 1991, Thermo Jarrell Ash Corporation (508–520–1880), 27 Forge Parkway, Franklin, MA 02038. [Note 14]

[65 FR 4381, Jan. 27, 2000, as amended at 65 FR 70315, Nov. 22, 2000]

§ 444.13 Effluent limitations attainable by the application of the best practicable control technology currently available (BPT).

Except as provided in 40 CFR 125.30 through 125.32, any existing point source subject to this subpart must achieve the following effluent limitations representing the application of BPT:

EFFLUENT LIMITATIONS [1]

Regulated parameter	Maximum daily	Maximum monthly avg.
TSS	113,000	34,800
Arsenic	84	72
Cadmium	71	26
Chromium	25	14
Copper	23	14
Lead	57	32
Mercury	2.3	1.3
Silver	13	8
Titanium	60	22
Zinc	82	54
pH	(2)	(2)

[1] Micrograms per liter (ppb)
[2] Within the range 6 to 9.

§ 444.14 Effluent limitations attainable by the application of the best conventional pollutant control technology (BCT).

Except as provided in 40 CFR 125.30 through 125.32, any existing point source subject to this subpart must achieve the following effluent limitations representing the application of BCT: Limitations for TSS and pH are the same as the corresponding limitation specified in § 444.13.

§ 444.15 Effluent limitations attainable by the application of the best available technology economically achievable (BAT).

Except as provided in 40 CFR 125.30 through 125.32, any existing point source subject to this subpart must achieve the following effluent limitations representing the application of BAT: Limitations for arsenic, cadmium, chromium, copper, lead, mercury, silver, titanium and zinc are the same as the corresponding limitation specified in § 444.13.

§ 444.16 Pretreatment standards for existing sources (PSES).

Except as provided in 40 CFR 403.7 and 403.13, any source that introduces wastewater pollutants into a POTW must comply with part 403 and achieve the following pretreatment standards:

PRETREATMENT STANDARDS [1]

Regulated parameter	Maximum daily	Maximum monthly avg.
Arsenic	84	72
Cadmium	71	26
Chromium	25	14
Copper	23	14
Lead	57	32
Mercury	2.3	1.3
Silver	13	8
Titanium	60	22
Zinc	82	54

[1] Micrograms per liter (ppb)

§ 444.17 New source performance standards (NSPS).

Any new source subject to this subpart must achieve the following performance standards: Standards for TSS, arsenic, cadmium, chromium, copper, lead, mercury, silver, titanium, zinc and pH are the same as the corresponding limitation specified in § 444.13.

§ 444.18 Pretreatment standards for new sources (PSNS).

Except as provided in 40 CFR 403.7, any source that introduces wastewater pollutants into a POTW must comply with 40 CFR part 403 and achieve the following pretreatment standards: Standards for arsenic, cadmium, chromium, copper, lead, mercury, silver, titanium and zinc are the same as the corresponding limitation specified in § 444.16.

[65 FR 4381, Jan. 27, 2000; 65 FR 33423, May 23, 2000]

PART 445—LANDFILLS POINT SOURCE CATEGORY

Sec.
445.1 General applicability.
445.2 General definitions.
445.3 General pretreatment standards.

Subpart A—RCRA Subtitle C Hazardous Waste Landfill

445.10 Applicability.
445.11 Effluent limitations attainable by the application of the best practicable control technology currently available (BPT).
445.12 Effluent limitations attainable by the application of the best conventional pollutant control technology (BCT).
445.13 Effluent limitations representing the degree of effluent reduction attainable by the application of the best available technology economically achievable (BAT).
445.14 New source performance standards (NSPS).

Subpart B—RCRA Subtitle D Non-Hazardous Waste Landfill

445.20 Applicability.
445.21 Effluent limitations attainable by the application of best practicable control technology currently available (BPT).
445.22 Effluent limitations attainable by the best conventional pollutant control technology (BCT).
445.23 Effluent limitations representing the degree of effluent reduction attainable by the application of the best available technology economically achievable (BAT).
445.24 New source performance standards (NSPS).

AUTHORITY: Secs. 301, 304, 306, 307, 308, 402 and 501 of the Clean Water Act, as amended (33 U.S.C. 1311, 1314, 1316, 1317, 1318, 1342 and 1361)

SOURCE: 65 FR 3048, Jan. 19, 2000, unless otherwise noted.

§ 445.1 General applicability.

(a) As defined more specifically in each subpart and except as provided in paragraphs (b) through (h) of this section, this part applies to discharges of wastewater from landfill units.

(b) The provisions of this part do not apply to wastewater discharges from land application or land treatment units, surface impoundments, underground injection wells, waste piles, salt dome formations, salt bed formations, underground mines or caves as these terms are defined in 40 CFR 257.2 and 260.10.

(c) The provisions of this part do not apply to wastewater generated off-site of a landfill facility, including wastewater generated off-site from washing vehicles or from waste transfer stations.

(d) The provisions of this part do not apply to discharges of contaminated ground water or wastewater from recovery pumping wells.

(e) This part does not apply to discharges of landfill wastewater from landfills operated in conjunction with other industrial or commercial operations when the landfill only receives wastes generated by the industrial or commercial operation directly associated with the landfill.

(f) This part does not apply to discharges of landfill wastewater from landfills operated in conjunction with other industrial or commercial operations when the landfill receives wastes generated by the industrial or commercial operation directly associated with the landfill and also receives other wastes provided the other wastes received for disposal are generated by a facility that is subject to the same provisions in 40 CFR subchapter N as the industrial or commercial operation or the other wastes received are of similar nature to the wastes generated by the industrial or commercial operation.

(g) This part does not apply to landfills operated in conjunction with Centralized Waste Treatment (CWT) facilities subject to 40 CFR Part 437 so long as the CWT facility commingles the landfill wastewater with other non-landfill wastewater for discharge. A landfill directly associated with a CWT facility is subject to this part if the CWT facility discharges landfill wastewater separately from other CWT wastewater or commingles the wastewater from its landfill only with wastewater from other landfills.

(h) This part does not apply to landfills operated in conjunction with other industrial or commercial operations when the landfill receives wastes from public service activities so long as the company owning the landfill does not receive a fee or other remuneration for the disposal service.

§ 445.2 General definitions.

In addition to the definitions set forth in 40 CFR 122.2, 257.2, 258.2, 264.10, 265.10, 401.11, and 403.3 the following definitions apply to this part:

(a) *Contaminated ground water* means water below the land surface in the zone of saturation which has been contaminated by activities associated with waste disposal.

(b) *Contaminated storm water* means storm water which comes in direct contact with landfill wastes, the waste handling and treatment areas, or landfill wastewater as defined in paragraph (f) of this section. Some specific areas of a landfill that may produce contaminated storm water include (but are not limited to): the open face of an active landfill with exposed waste (no cover added); the areas around wastewater treatment operations; trucks, equipment or machinery that has been in direct contact with the waste; and waste dumping areas.

(c) *Landfill* directly associated with an industrial or commercial operation means:

(1) A landfill located on the same site as industrial or commercial operations; and

(2) A landfill not located on the same site as the industrial or commercial operations (off-site), but ''wholly-owned'' by the industrial or commercial facility and primarily dedicated to receiving waste from the related industrial or commercial facility.

(d) *Facility* means all contiguous property owned, operated, leased or under the control of the same person or entity.

(e) *Landfill unit* means an area of land or an excavation in which wastes are placed for permanent disposal, that is not a land application or land treatment unit, surface impoundment, underground injection well, waste pile, salt dome formation, a salt bed formation, an underground mine or a cave as these terms are defined in 40 CFR 257.2, 258.2 and 264.10.

(f) *Landfill wastewater* means all wastewater associated with, or produced by, landfilling activities except for sanitary wastewater, non-contaminated storm water, contaminated ground water, and wastewater from recovery pumping wells. Landfill wastewater includes, but is not limited to, leachate, gas collection condensate, drained free liquids, laboratory derived wastewater, contaminated storm water and contact washwater from washing truck, equipment, and railcar exteriors and surface areas which have come in direct contact with solid waste at the landfill facility.

(g) *Non-contaminated storm water* means storm water which does not come in direct contact with landfill wastes, the waste handling and treatment areas, or landfill wastewater that is defined in paragraph (f) of this section. Non-contaminated storm water includes storm water which flows off the cap, cover, intermediate cover, daily cover, and/or final cover of the landfill.

(h) *Off-site* means outside the boundaries of a facility.

(i) *On-site* means within the boundaries of a facility.

(j) *Public service* means the provision of landfill waste disposal services to individual members of the general public, publicly-owned organizations (schools, universities, government agencies, municipalities) and not-for-profit organizations for which the landfill does not receive a fee or other remuneration.

(k) The regulated parameters for this part, numbered (P) and listed with approved methods of analysis in Table 1B at 40 CFR 136.3, are defined as follows:

(1) *Ammonia (as N)* means ammonia reported as nitrogen. P4.

(2) BOD_5 means 5-day biochemical oxygen demand. P9.

(3) *Arsenic* means total arsenic. P6.

(4) *Chromium* means total chromium. P19.

(5) *Zinc* means total zinc. P75.

(l) The regulated parameters for this part, numbered (P) and listed with approved methods of analysis in Table 1C at 40 CFR 136.3, are as follows:

(1) Naphthalene. P68.

(2) Phenol. P85.

(m) The regulated parameters for this part listed with approved methods of analysis in the attachments to Methods 625 and 1625B in Appendix A at 40 CFR Part 136 are as follows:

(1) Aniline.

(2) Benzoic acid.

(3) p-Cresol.

(4) Pyridine.

(5) a-Terpineol.

§ 445.3 General pretreatment standards.

Any source subject to this part that introduces wastewater pollutants into a publicly owned treatment works (POTW) must comply with 40 CFR part 403.

Subpart A—RCRA Subtitle C Hazardous Waste Landfill

§ 445.10 Applicability.

Except as provided in § 445.1, this subpart applies to discharges of wastewater from landfills subject to the provisions of 40 CFR Part 264, *Standards for Owners and Operators of Hazardous Waste Treatment, Storage, and Disposal Facilities, Subpart N–(Landfills);* and 40 CFR Part 265, *Interim Status Standards for Owners and Operators of Hazardous Waste Treatment, Storage, and Disposal Facilities, Subpart N–(Landfills).*

§ 445.11 Effluent limitations attainable by the application of the best practicable control technology currently available (BPT).

Except as provided in 40 CFR 125.30 through 125.32, any existing point source subject to this subpart must achieve the following effluent limitations which represent the application of BPT:

EFFLUENT LIMITATIONS

Regulated parameter	Maximum daily [1]	Maximum monthly avg.[1]
BOD_5	220	56
TSS	88	27
Ammonia (as N)	10	4.9
α-Terpineol	0.042	0.019
Aniline	0.024	0.015
Benzoic acid	0.119	0.073
Naphthalene	0.059	0.022
p-Cresol	0.024	0.015
Phenol	0.048	0.029
Pyridine	0.072	0.025
Arsenic	1.1	0.54
Chromium	1.1	0.46
Zinc	0.535	0.296
pH	([2])	([2])

[1] Milligrams per liter (mg/L, ppm).
[2] Within the range 6 to 9.

[65 FR 3048, Jan. 19, 2000; 65 FR 14344, Mar. 16, 2000]

§ 445.12 Effluent limitations attainable by the application of the best conventional pollutant control technology (BCT).

Except as provided in 40 CFR 125.30 through 125.32, any existing point source subject to this subpart must achieve the following effluent limitations which represent the application of BCT: Limitations for BOD_5, TSS and pH are the same as the corresponding limitations specified in § 445.11.

§ 445.13 Effluent limitations representing the degree of effluent reduction attainable by the application of best available technology economically achievable (BAT).

Except as provided in 40 CFR 125.30 through 125.32, any existing point source subject to this subpart must achieve the following effluent limitations which represent the application of BAT: Limitations for ammonia (as N), a-terpineol, aniline, benzoic acid, naphthalene, p-cresol, phenol, pyridine, arsenic, chromium and zinc are the same as the corresponding limitations specified in § 445.11.

§ 445.14 New source performance standards (NSPS).

Any new source subject to this subpart must achieve the following performance standards: Standards are the same as those specified in § 445.11.

Subpart B—RCRA Subtitle D Non-Hazardous Waste Landfill

§ 445.20 Applicability.

Except as provided in § 445.1, this subpart applies to discharges of wastewater from landfills subject to the provisions of 40 CFR part 258, *Criteria for Municipal Solid Waste Landfills;* and 40 CFR part 257, *Criteria for Classification of Solid Waste Disposal Facilities and Practices*.

§ 445.21 Effluent limitations attainable by the application of the best practicable control technology currently available (BPT).

Except as provided in 40 CFR 125.30 through 125.32, any existing point source subject to this subpart must achieve the following effluent limitations which represent the application of BPT:

EFFLUENT LIMITATIONS

Regulated parameter	Maximum daily [1]	Maximum monthly avg. [1]
BOD	140	37
TSS	88	27
Ammonia (as N)	10	4.9
α-Terpineol	0.033	0.016
Benzoic acid	0.12	0.071

EFFLUENT LIMITATIONS—Continued

Regulated parameter	Maximum daily [1]	Maximum monthly avg. [1]
p-Cresol	0.025	0.014
Phenol	0.026	0.015
Zinc	0.20	0.11
pH	([2])	([2])

[1] Milligrams per liter (mg/L, ppm)
[2] Within the range 6 to 9.

[65 FR 3048, Jan. 19, 2000; 65 FR 14344, Mar. 16, 2000]

§ 445.22 Effluent limitations attainable by the application of the best conventional pollutant control technology (BCT).

Except as provided in 40 CFR 125.30 through 125.32, any existing point source subject to this subpart must achieve the following effluent limitations which represent the application of BCT: Limitations for BOD_5, TSS and pH are the same as the corresponding limitations specified in § 445.21.

§ 445.23 Effluent limitations representing the degree of effluent reduction attainable by the application of the best available technology economically achievable (BAT).

Except as provided in 40 CFR 125.30—125.32, any existing point source subject to this subpart must achieve the following effluent limitations which represent the application of BAT: Limitations for ammonia (as N), a-terpineol, benzoic acid, p-cresol, phenol and zinc are the same as the corresponding limitations specified in § 445.21.

§ 445.24 New source performance standards (NSPS).

Any new source subject to this subpart must achieve the following performance standards: Standards are the same as those specified in § 445.21.

PART 446—PAINT FORMULATING POINT SOURCE CATEGORY

Subpart A—Oil-Base Solvent Wash Paint Subcategory

Sec.

446.10 Applicability; description of the oil-base solvent wash paint subcategory.
446.11 Specialized definitions.
446.12 Effluent limitations guidelines representing the degree of effluent reduction attainable by the application of the best practicable control technology currently available.
446.13 Effluent limitations guidelines representing the degree of effluent reduction attainable by the application of the best available technology economically achievable.
446.14 [Reserved]
446.15 Standards of performance for new sources.
446.16 Pretreatment standards for new sources.

AUTHORITY: Secs. 301, 304(b) and (c), 306(b) and (c) and 307(c), Federal Water Pollution Control Act, as amended (the Act); 33 U.S.C. 1251, 1311, 1314(b) and (c), 1316(b) and (c) and 1317(c); 86 Stat. 816 *et seq.;* Pub. L. 92–500.

SOURCE: 40 FR 31725, July 28, 1975, unless otherwise noted.

Subpart A—Oil-Base Solvent Wash Paint Subcategory

§ 446.10 Applicability; description of the oil-base solvent wash paint subcategory.

The provisions of this subpart are applicable to discharges resulting from the production of oil-base paint where the tank cleaning is performed using solvents. When a plant is subject to effluent limitations covering more than one subcategory the discharge limitation shall be the aggregate of the limitations applicable to the total production covered in each subcategory.

§ 446.11 Specialized definitions.

For the purpose of this subpart:

(a) Except as provided below, the general definitions, abbreviations and methods of analysis set forth in 40 CFR part 401 shall apply to this subpart.

§ 446.12 Effluent limitations guidelines representing the degree of effluent reduction attainable by the application of the best practicable control technology currently available.

Except as provided in §§ 125.30 through 125.32, any existing point source subject to this subpart shall achieve the following effluent limitations representing the degree of effluent reduction attainable by the application of the best practicable control technology currently available (BPT): There shall be no discharge of process waste water pollutants to navigable waters.

[60 FR 33970, June 29, 1995]

§ 446.13 Effluent limitations guidelines representing the degree of effluent reduction attainable by the application of the best available technology economically achievable.

The following limitations establish the quantity or quality of pollutants or pollutant properties which may be discharged by a point source subject to the provisions of this subpart after application of the best available technology economically achievable: There shall be no discharge of process waste water pollutants to navigable waters.

§ 446.14 [Reserved]

§ 446.15 Standards of performance for new sources.

The following standards of performance establish the quantity or quality of pollutants or pollutant properties which may be discharged by a new source subject to the provisions of this subpart: There shall be no discharge of process waste water pollutants to navigable waters.

§ 446.16 Pretreatment standards for new sources.

Any new source subject to this subpart that introduces process wastewater pollutants into a publicly owned treatment works must comply with 40 CFR part 403. In addition, the following pretreatment standard establishes the quantity or quality of pollutants or pollutant properties controlled by this section which may be discharged to a publicly owned treatment works by a new source subject to the provisions of this subpart: There shall be no discharge of process water pollutants to a publicly owned treatment works.

[60 FR 33970, June 29, 1995]

PART 447—INK FORMULATING POINT SOURCE CATEGORY

Subpart A—Oil-Base Solvent Wash Ink Subcategory

Sec.
447.10 Applicability; description of the oil-base solvent wash ink subcategory.
447.11 Specialized definitions.
447.12 Effluent limitations guidelines representing the degree of effluent reduction attainable by the application of the best practicable control technology currently available.
447.13 Effluent limitations guidelines representing the degree of effluent reduction attainable by the application of the best available technology economically achievable.
447.14 [Reserved]
447.15 Standards of performance for new sources.
447.16 Pretreatment standards for new sources.

AUTHORITY: Secs. 301, 304 (b) and (c), 306 (b) and (c) and 307(c), Federal Water Pollution Control Act, as amended (the Act); 33 U.S.C. 1251, 1311, 1314 (b) and (c), 1316 (b) and (c) and 1317(c); 86 Stat. 816 *et seq.;* Pub. L. 92–500.

SOURCE: 40 FR 31727, July 28, 1975, unless otherwise noted.

Subpart A—Oil-Base Solvent Wash Ink Subcategory

§ 447.10 Applicability; description of the oil-base solvent wash ink subcategory.

The provisions of this subpart are applicable to discharges resulting from the production of oil-base ink where the tank washing system uses solvents. When a plant is subject to effluent limitations covering more than one subcategory the discharge limitation shall be the aggregate of the limitations applicable to the total production covered in each subcategory.

§ 447.11 Specialized definitions.

For the purpose of this subpart:

(a) Except as provided below, the general definitions, abbreviations, and methods of analysis set forth in 40 CFR part 401 shall apply to this subpart.

§ 447.12 Effluent limitations guidelines representing the degree of effluent reduction attainable by the application of the best practicable control technology currently available.

Except as provided in §§ 125.30 through 125.32, any existing point source subject to this subpart shall achieve the following effluent limitations representing the degree of effluent reduction attainable by the application of the best practicable control technology currently available (BPT): There shall be no discharge of process waste water pollutants to navigable waters.

[60 FR 33970, June 29, 1995]

§ 447.13 Effluent limitations guidelines representing the degree of effluent reduction attainable by the application of the best available technology economically achievable.

The following limitations establish the quantity or quality of pollutants or pollutant properties which may be discharged by a point source subject to the provisions of this subpart after application of the best available technology economically achievable: There shall be no discharge of process waste water pollutants to navigable waters.

§ 447.14 [Reserved]

§ 447.15 Standards of performance for new sources.

The following standards of performance establish the quantity or quality of pollutants or pollutant properties which may be discharged by a new source subject to the provisions of this subpart: There shall be no discharge of process waste water pollutants to navigable waters.

§ 447.16 Pretreatment standards for new sources.

Any new source subject to this subpart that introduces process wastewater pollutants into a publicly owned treatment works must comply with 40 CFR part 403. In addition, the following pretreatment standard establishes the quantity or quality of pollutants or pollutant properties controlled by this section which may be discharged to a publicly owned treatment works by a new source subject to the provisions of this subpart: There shall be no discharge of process water pollutants to a publicly owned treatment works.

[60 FR 33970, June 29, 1995]

PART 454—GUM AND WOOD CHEMICALS MANUFACTURING POINT SOURCE CATEGORY

Subpart A—Char and Charcoal Briquets Subcategory

Sec.
454.10 Applicability; description of the manufacture of char and charcoal briquets subcategory.
454.11 Specialized definitions.
454.12 Effluent limitations and guidelines representing the degree of effluent reduction attainable by the application of the best practicable control technology currently available.

Subpart B—Gum Rosin and Turpentine Subcategory

454.20 Applicability; description of the manufacture of gum rosin and turpentine subcategory.
454.21 Specialized definitions.
454.22 Effluent limitations and guidelines representing the degree of effluent reduction attainable by the application of the best practicable control technology currently available.

Subpart C—Wood Rosin, Turpentine and Pine Oil Subcategory

454.30 Applicability; description of the manufacture of wood rosin, turpentine and pine oil subcategory.
454.31 Specialized definitions.
454.32 Effluent limitations and guidelines representing the degree of effluent reduction attainable by the application of the best practicable control technology currently available.

Subpart D—Tall Oil Rosin, Pitch and Fatty Acids Subcategory

454.40 Applicability; description of the manufacture of tall oil rosin, pitch and fatty acids subcategory.
454.41 Specialized definitions.
454.42 Effluent limitations and guidelines representing the degree of effluent reduction attainable by the application of the best practicable control technology currently available.

Subpart E—Essential Oils Subcategory

454.50 Applicability; description of the essential oils subcategory.
454.51 Specialized definitions.
454.52 Effluent limitations and guidelines representing the degree of effluent reduction attainable by the application of the best practicable control technology currently available.

Subpart F—Rosin-Based Derivatives Subcategory

454.60 Applicability; description of manufacture of rosin-based derivatives subcategory.
454.61 Specialized definitions.
454.62 Effluent limitations and guidelines representing the degree of effluent reduction attainable by the application of the best practicable control technology currently available.

AUTHORITY: Secs. 301, 304(b) and (c), 306(b), 307(b) and (c), Federal Water Pollution Control Act, as amended (33 U.S.C. 1251, 1311, 1314(b) and (c), 1316(b) and 1317(b) and (c), 86 Stat. 816 *et. seq.;* Pub. L. 92–500) (the Act).

SOURCE: 41 FR 20511, May 18, 1976, unless otherwise noted.

Subpart A—Char and Charcoal Briquets Subcategory

§ 454.10 Applicability; description of the manufacture of char and charcoal briquets subcategory.

The provisions of this subpart are applicable to discharges resulting from the production of char and charcoal briquets.

§ 454.11 Specialized definitions.

For the purpose of this subpart:

(a) Except as provided below, the general definitions, abbreviations and methods of analysis set forth in part 401 of this chapter shall apply to this subpart.

(b) The term ''product'' shall mean char and charcoal briquets.

§ 454.12 Effluent limitations and guidelines representing the degree of effluent reduction attainable by the application of the best practicable control technology currently available.

Except as provided in §§ 125.30 through 125.32, any existing point source subject to this subpart shall achieve the following effluent limitations representing the degree of effluent reduction attainable by the application of the best practicable control technology currently available (BPT):

(a) The following limitations establish the quantity or quality of pollutants or pollutant properties, controlled by this paragraph, which may be discharged from the manufacture of char and charcoal briquets by a point source subject to the provisions of this paragraph after application of the best practicable control technology currently available: There shall be no discharge of process wastewater pollutants to navigable waters.

[41 FR 20511, May 18, 1976, as amended at 60 FR 33970, June 29, 1995]

Subpart B—Gum Rosin and Turpentine Subcategory

§ 454.20 Applicability; description of the manufacture of gum rosin and turpentine subcategory.

The provisions of this subpart are applicable to discharges resulting from the manufacture of gum rosin and turpentine.

§ 454.21 Specialized definitions.

For the purpose of this subpart:

(a) Except as provided below, the general definitions, abbreviations and methods of analysis set forth in 40 CFR part 401 shall apply to this subpart.

(b) The term ''product'' shall mean gum rosin and turpentine.

§ 454.22 Effluent limitations and guidelines representing the degree of effluent reduction attainable by the application of the best practicable control technology currently available.

Except as provided in §§ 125.30 through 125.32, any existing point source subject to this subpart shall achieve the following effluent limitations representing the degree of effluent reduction attainable by the application of the best practicable control technology currently available (BPT):

(a) The following limitations establish the quantity or quality of pollutants or pollutant properties, controlled by this paragraph, which may be discharged from the manufacture of gum rosin and turpentine by a point source

subject to the provisions of this paragraph after application of the best practicable control technology currently available:

[Metric units, kg/kkg of product; English units, lb/1,000 lb of product]

Effluent characteristic	Effluent limitations	
	Maximum for any 1 day	Average of daily values for 30 consecutive days shall not exceed—
BOD5	1.42	0.755
TSS	0.077	0.026
pH	(1)	(1)

[1] Within the range 6.0 to 9.0.

[41 FR 20511, May 18, 1976, as amended at 60 FR 33970, June 29, 1995]

Subpart C—Wood Rosin, Turpentine and Pine Oil Subcategory

§ 454.30 Applicability; description of the manufacture of wood rosin, turpentine and pine oil subcategory.

The provisions of this subpart are applicable to discharges resulting from the manufacture of wood rosin, turpentine and pine oil subcategory.

§ 454.31 Specialized definitions.

For the purpose of this subpart:

(a) Except as provided below, the general definitions, abbreviations and methods of analysis set forth in 40 CFR part 401 shall apply to this subpart.

(b) The term ''product'' shall mean products from wood rosin, turpentine and pine oil.

§ 454.32 Effluent limitations and guidelines representing the degree of effluent reduction attainable by the application of the best practicable control technology currently available.

Except as provided in §§ 125.30 through 125.32, any existing point source subject to this subpart shall achieve the following effluent limitations representing the degree of effluent reduction attainable by the application of the best practicable control technology currently available (BPT):

(a) The following limitations establish the quantity or quality of pollutants or pollutant properties, controlled by this paragraph, which may be discharged from the manufacture of wood rosin, turpentine and pine oil by a point source subject to the provisions of this paragraph after application of the best practicable control technology currently available:

[Metric units, kg/kkg of product; English units, lb/1,000 lb of product]

Effluent characteristic	Effluent limitations	
	Maximum for any 1 day	Average of daily values for 30 consecutive days shall not exceed—
BOD5	2.08	1.10
TSS	1.38	0.475
pH	(1)	(1)

[1] Within the range 6.0 to 9.0.

[41 FR 20511, May 18, 1976, as amended at 60 FR 33970, June 29, 1995]

Subpart D—Tall Oil Rosin, Pitch and Fatty Acids Subcategory

§ 454.40 Applicability; description of manufacture of tall oil rosin, pitch and fatty acids subcategory.

The provisions of this subpart are applicable to discharges resulting from the manufacture of tall oil rosin, pitch and fatty acids.

§ 454.41 Specialized definitions.

For the purpose of this subpart:

(a) Except as provided below, the general definitions, abbreviations and methods of analysis set forth in 40 CFR part 401 shall apply to this subpart.

(b) The term ''product'' shall mean tall oil rosin, pitch and fatty acids.

§ 454.42 Effluent limitations and guidelines representing the degree of effluent reduction attainable by the application of the best practicable control technology currently available.

Except as provided in §§ 125.30 through 125.32, any existing point source subject to this subpart shall achieve the following effluent limitations representing the degree of effluent reduction attainable by the application of the best practicable control technology currently available (BPT):

(a) The following limitations establish the quantity or quality of pollutants or pollutant properties, controlled by this paragraph, which may be discharged from the manufacture of tall

oil rosin, pitch and fatty acids by a point source subject to the provisions of this paragraph after application of the best practicable control technology currently available:

[Metric units, kg/kkg of product; English units, lb/1,000 lb of product]

Effluent characteristic	Effluent limitations	
	Maximum for any 1 day	Average of daily values for 30 consecutive days shall not exceed—
BOD5	0.995	0.529
TSS	0.705	0.243
pH	(1)	(1)

[1] Within the range 6.0 to 9.0.

[41 FR 20511, May 18, 1976, as amended at 60 FR 33971, June 29, 1995]

Subpart E—Essential Oils Subcategory

§ 454.50 Applicability; description of the essential oils subcategory.

The provisions of this subpart are applicable to discharges resulting from the manufacture of essential oils.

§ 454.51 Specialized definitions.

For the purpose of this subpart:

(a) Except as provided below, the general definitions, abbreviations and methods of analysis set forth in 40 CFR part 401 shall apply to this subpart.

(b) The term ''product'' shall mean essential oils.

§ 454.52 Effluent limitations and guidelines representing the degree of effluent reduction attainable by the application of the best practicable control technology currently available.

Except as provided in §§ 125.30 through 125.32, any existing point source subject to this subpart shall achieve the following effluent limitations representing the degree of effluent reduction attainable by the application of the best practicable control technology currently available (BPT):

(a) The following limitations establish the quantity or quality of pollutants or pollutant properties, controlled by this paragraph, which may be discharged from the manufacture of essential oils by a point source subject to the provisions of this paragraph after application of the best practicable control technology currently available:

[Metric units, kg/kkg of product; English units, lb/1,000 lb of product]

Effluent characteristic	Effluent limitations	
	Maximum for any 1 day	Average of daily values for 30 consecutive days shall not exceed—
BOD5	22.7	12.0
TSS	9.01	3.11
pH	(1)	(1)

[1] Within the range 6.0 to 9.0.

[41 FR 20511, May 18, 1976, as amended at 60 FR 33971, June 29, 1995]

Subpart F—Rosin-Based Derivatives Subcategory

§ 454.60 Applicability; description of manufacture of rosin-based derivatives subcategory.

The provisions of this subpart are applicable to discharges resulting from the manufacture of rosin-based derivatives.

§ 454.61 Specialized definitions.

For the purpose of this subpart:

(a) Except as provided below, the general definitions, abbreviations and methods of analysis set forth in 40 CFR part 401 shall apply to this subpart.

(b) The term ''product'' shall mean rosin-based derivatives.

§ 454.62 Effluent limitations and guidelines representing the degree of effluent reduction attainable by the application of the best practicable control technology currently available.

Except as provided in §§ 125.30 through 125.32, any existing point source subject to this subpart shall achieve the following effluent limitations representing the degree of effluent reduction attainable by the application of the best practicable control technology currently available (BPT):

(a) The following limitations establish the quantity or quality of pollutants or pollutant properties, controlled by this paragraph, which may be discharged from the manufacture of rosin-based derivatives by a point source subject to the provisions of this paragraph after application of the best

practicable control technology currently available:

[Metric units, kg/kkg of product; English units, lb/1,000 lb of product]

Effluent characteristic	Effluent limitations	
	Maximum for any 1 day	Average of daily values for 30 consecutive days shall not exceed—
BOD5	1.41	0.748
TSS	0.045	0.015
pH	(1)	(1)

[1] Within the range 6.0 to 9.0.

[41 FR 20511, May 18, 1976, as amended at 60 FR 33971, June 29, 1995]

PART 455—PESTICIDE CHEMICALS

Sec.
455.10 General definitions.

Subpart A—Organic Pesticide Chemicals Manufacturing Subcategory

455.11 Compliance date for pretreatment standards for existing sources (PSES).
455.20 Applicability; description of the organic pesticide chemicals manufacturing subcategory.
455.21 Specialized definitions.
455.22 Effluent limitations guidelines representing the degree of effluent reduction attainable by the application of the best practicable control technology currently available.
455.23 Effluent limitations guidelines representing the degree of effluent reduction attainable by the application of the best conventional pollutant control technology (BCT).
455.24 Effluent limitations guidelines representing the degree of effluent reduction attainable by the application of the best available control technology economically achievable (BAT).
455.25 New source performance standards (NSPS).
455.26 Pretreatment standards for existing sources (PSES).
455.27 Pretreatment standards for new sources (PSNS).

Subpart B—Metallo-Organic Pesticide Chemicals Manufacturing Subcategory

455.30 Applicability; description of the metallo-organic pesticide chemicals manufacturing subcategory.
455.31 Specialized definitions.
455.32 Effluent limitations guidelines representing the degree of effluent reduction attainable by the application of the best practicable control technology currently available.
455.33 Effluent limitations guidelines representing the degree of effluent reduction attainable by the application of the best conventional pollutant control technology (BCT). [Reserved]
455.34 Effluent limitations guidelines representing the degree of effluent reduction attainable by the application of the best available control technology economically achievable (BAT). [Reserved]
455.35 New source performance standards (NSPS). [Reserved]
455.36 Pretreatment standards for existing sources (PSES). [Reserved]
455.37 Pretreatment standards for new sources (PSNS). [Reserved]

Subpart C—Pesticide Chemicals Formulating and Packaging Subcategory

455.40 Applicability; description of the pesticide formulating, packaging and repackaging subcategory.
455.41 Special definitions.
455.42 Effluent limitations guidelines representing the degree of effluent reduction attainable by the application of the best practicable control technology currently available, (BPT).
455.43 Effluent limitations guidelines representing the degree of effluent reduction attainable by the application of the best conventional pollutant control technology (BCT).
455.44 Effluent limitations guidelines representing the degree of effluent reduction attainable by the application of the best available control technology economically achievable (BAT).
455.45 New source performance standards (NSPS).
455.46 Pretreatment standards for existing sources (PSES).
455.47 Pretreatment standards for new sources (PSNS).

Subpart D—Test Methods for Pesticide Pollutants

455.50 Identification of test procedures.

Subpart E—Repackaging of Agricultural Pesticides Performed at Refilling Establishments

455.60 Applicability; description of the repackaging of agricultural pesticides performed by refilling establishments subcategory.
455.61 Special definitions.
455.62 Effluent limitations guidelines representing the degree of effluent reduction attainable by the application of the best practicable pollutant control technology (BPT).

455.63 Effluent limitations guidelines representing the degree of effluent reduction attainable by the application of the best conventional pollutant control technology (BCT).
455.64 Effluent limitations guidelines representing the degree of effluent reduction attainable by the application of the best available technology economically achievable (BAT).
455.65 New source performance standards (NSPS).
455.66 Pretreatment standards for existing sources (PSES).
455.67 Pretreatment standards for new sources (PSNS).
TABLE 1 TO PART 455—LIST OF ORGANIC PESTICIDE ACTIVE INGREDIENTS
TABLE 2 TO PART 455—ORGANIC PESTICIDE ACTIVE INGREDIENT EFFLUENT LIMITATIONS BEST AVAILABLE TECHNOLOGY ECONOMICALLY ACHIEVABLE (BAT) AND PRETREATMENT STANDARDS FOR EXISTING SOURCES (PSES)
TABLE 3 TO PART 455—ORGANIC PESTICIDE ACTIVE INGREDIENT NEW SOURCE PERFORMANCE STANDARDS (NSPS) AND PRETREATMENT STANDARDS FOR NEW SOURCES (PSNS)
TABLE 4 TO PART 455—BAT AND NSPS EFFLUENT LIMITATIONS FOR PRIORITY POLLUTANTS FOR DIRECT DISCHARGE POINT SOURCES THAT USE END-OF-PIPE BIOLOGICAL TREATMENT
TABLE 5 TO PART 455, SUBPART A—BAT AND NSPS EFFLUENT LIMITATIONS FOR PRIORITY POLLUTANTS FOR DIRECT DISCHARGE POINT SOURCES THAT DO NOT USE END-OF-PIPE BIOLOGICAL TREATMENT
TABLE 6 TO PART 455—PSES AND PSNS FOR PRIORITY POLLUTANTS
TABLE 7 TO PART 455—TEST METHODS FOR PESTICIDE ACTIVE INGREDIENTS
TABLE 8 TO PART 455—LIST OF POLLUTION PREVENTION ALTERNATIVE PRACTICES
TABLE 9 TO PART 455—GROUP 2 MIXTURES
TABLE 10 TO PART 455—LIST OF APPROPRIATE POLLUTION CONTROL TECHNOLOGIES

AUTHORITY: Secs. 301, 304, 306, 307, and 501, Pub. L. 92–500, 86 Stat. 816, Pub. L. 95–217, 91 Stat. 156, and Pub. L. 100–4 (33 U.S.C. 1311, 1314, 1316, 1317, and 1361).

SOURCE: 43 FR 17776, Apr. 25, 1978, unless otherwise noted.

§ 455.10 General definitions.

As used in this part:

(a)(1) *Pesticide* means any substance or mixture of substances intended for preventing, destroying, repelling, or mitigating any pest.

(b) *Active ingredient* means an ingredient of a pesticide which is intended to prevent, destroy, repel, or mitigate any pest.

(c) *Pesticide chemicals* means the sum of all active ingredients manufactured at each facility covered by this part.

(d) *Pest* means: (1) Any insect, rodent, nematode, fungus, weed, or (2) any other form of terrestrial or aquatic plant or animal life or virus, bacteria, or other micro-organism (except virusus, bacteria, or other micro-organisms on or in living man or other living animals) which the Administrator declares to be a pest under section 25(c)(1) of Pub. L. 94–140, Federal Insecticide, Fungicide and Rodenticide Act.

(e) Except as provided in this regulation, the general definitions, abbreviations and methods of analysis set forth in part 401 of this chapter shall apply to this part.

(f) *Priority Pollutants* means the toxic pollutants listed in 40 CFR part 423, appendix A.

(g) *Appropriate pollution control technology* means the wastewater treatment technology listed in Table 10 to this part 455 for a particular PAI(s) including an emulsion breaking step prior to the listed technology when emulsions are present in the wastewater to be treated.

(h) *Equivalent system* means a wastewater treatment system that is demonstrated in literature, treatability tests or self-monitoring data to remove a similar level of pesticide active ingredient (PAI) or priority pollutants as the applicable appropriate pollution control technology listed in Table 10 to this part 455.

(i) *Formulation* of pesticide products means the process of mixing, blending or diluting one or more pesticide active ingredients (PAIs) with one or more active or inert ingredients, without an intended chemical reaction to obtain a manufacturing use product or an end use product.

(j) *Group 1 mixtures* means any product whose only pesticidal active ingredient(s) is: a common food/food constituent or non-toxic household item; or is a substance that is generally recognized as safe (GRAS) by the Food and Drug Administration (21 CFR 170.30, 182, 184, and 186) in accordance with good manufacturing practices, as

defined by 21 CFR part 182; or is exempt from FIFRA under 40 CFR 152.25.

(k) *Group 2 mixtures* means those chemicals listed in Table 9 to this part 455.

(l) *Inorganic wastewater treatment chemicals* means inorganic chemicals that are commonly used in wastewater treatment systems to aid in the removal of pollutants through physical/chemical technologies such as chemical precipitation, flocculation, neutralization, chemical oxidation, hydrolysis and/or adsorption.

(m) *Interior wastewater sources* means wastewater that is generated from cleaning or rinsing the interior of pesticide formulating, packaging or repackaging equipment; or from rinsing the interior of raw material drums, shipping containers or bulk storage tanks; or cooling water that comes in direct contact with pesticide active ingredients (PAIs) during the formulating, packaging or repackaging process.

(n) *Microorganisms* means registered pesticide active ingredients that are biological control agents listed in 40 CFR 152.20(a)(3) including Eucaryotes (protozoa, algae, fungi), Procaryotes (bacteria), and Viruses.

(o) *Packaging* of pesticide products means enclosing or placing a formulated pesticide product into a marketable container.

(p) *PFPR/Manufacturer* means a pesticide formulating, packaging and repackaging facility that also performs pesticide manufacturing on-site and commingles their PFPR process wastewaters and pesticide manufacturing process wastewaters.

(q) *Pool chemicals* means pesticide products that are intended to disinfect or sanitize, reducing or mitigating growth or development of microbiological organisms including bacteria, algae, fungi or viruses in the water of swimming pools, hot tubs, spas or other such areas, in the household and/or institutional environment, as provided in the directions for use on the product label.

(r) *Refilling establishment* means an establishment where the activity of repackaging pesticide product into refillable containers occurs.

(s) *Repackaging of pesticide products* means the transfer of a pesticide formulation (or PAI) from one container to another without a change in composition of the formulation or the labeling content, for sale or distribution.

(t) *Sanitizer products* means pesticide products that are intended to disinfect or sanitize, reducing or mitigating growth or development of microbiological organisms including bacteria, fungi or viruses on inanimate surfaces in the household, institutional, and/or commercial environment and whose labeled directions for use result in the product being discharged to Publicly Owned Treatment Works (POTWs). This definition shall also include sanitizer solutions as defined by 21 CFR 178.1010 and pool chemicals as defined in this section (455.10(q)). This definition does not include liquid chemical sterilants (including sporicidals) exempted by § 455.40(f) or otherwise, industrial preservatives, and water treatment microbiocides other than pool chemicals.

(u) *Stand-alone PFPR facility* means a PFPR facility where either: No pesticide manufacturing occurs; or where pesticide manufacturing process wastewaters are not commingled with PFPR process wastewaters. Such facilities may formulate, package or repackage or manufacture other non-pesticide chemical products and be considered a ''stand-alone'' PFPR facility.

[43 FR 17776, Apr. 25, 1978, as amended at 50 FR 40701, Oct. 4, 1985; 51 FR 44911, Dec. 15, 1986; 58 FR 50689, Sept. 28, 1993; 61 FR 57548, Nov. 6, 1996]

Subpart A—Organic Pesticide Chemicals Manufacturing Subcategory

SOURCE: 43 FR 44846, Sept. 29, 1978, unless otherwise noted.

§ 455.11 Compliance date for pretreatment standards for existing sources (PSES).

All discharges subject to pretreatment standards for existing sources (PSES) in subparts A and B of this part must comply with the standards no later than September 28, 1993.

[61 FR 57549, Nov. 6, 1996]

§ 455.20 Applicability; description of the organic pesticide chemicals manufacturing subcategory.

(a) For the purpose of calculating and applying effluent limitations for COD, BOD*5*, and TSS, and applying pH limits under BPT (§ 455.22), BCT (§ 455.23), and NSPS (§ 455.25), the provisions of this subpart are applicable to discharges resulting from the manufacture of organic pesticide active ingredients and organo-tin pesticide active ingredients, excluding the following: Allethrin; Benzyl Benzoate; Bisethylxanthogen; Chlorophacinone; Coumafuryl; Dimethyl Phthalate; Diphacinone; Endothall Acid; EXD (Herbisan); Gibberellic Acid; Glyphosate; Naphthalene Acetic Acid; Propargite; 1,8 Naphthalic Anhydride; Quinmethionate; Rotenone; Sulfoxide; Triazine compounds (both symmetrical and asymmetrical); and Warfarin and similar anticoagulants. Provided, however, that the effluent limitations of this subpart for BOD*5* and TSS, but not COD, apply to manufacturers of Ametryn, Prometon, Prometryn, Terbutryn, Cyanazine, Atrazine, Propazine, Simazine, Terbuthylazine, Hexazinone, and Glyphosate.

(b) For the purpose of calculating BPT effluent limitations for organic Pesticide chemicals, the provisions of this subpart are applicable to discharges resulting from the manufacture of the following organic active ingredients: Aldrin, BHC, Captan, Chlordane, DDD, DDE, DDT, Dichloran, Dieldrin, Endosulfan, Endrin, Heptachlor, Lindane, Methoxychlor, Mirex, PCNB, Toxaphene, Trifluralin, Azinphos Methyl, Demeton-O, Demeton-S, Diazinon, Disulfoton, Malathion, Parathion Methyl, Parathion Ethyl, Aminocarb, Carbaryl, Methiocarb, Mexacarbate, Propoxur, Barban, Chlorpropham, Diuron, Fenuron, Fenuron-TCA, Linuron, Monuron, Monuron-TCA, Neubron, Propham, Swep, 2,4-D, Dicamba, Silvex, 2,4,5-T, Siduron, Perthane, and Dicofol.

(c) The intermediates used to manufacture the active ingredients and active ingredients used solely in experimental pesticides are excluded from coverage in this subpart. Insecticidal pathogenic organisms such as Bacillus thuringiensis, insect growth hormones, plant extracts such as pyrethrins; sex attractants and botanicals such as Rotenone are also excluded from BPT coverage in this subpart.

(d) A plant that manufactures a pesticide active ingredient listed in Table 1 of this part must comply with the BAT effluent limitations and new source performance and pretreatment standards for that pesticide active ingredient listed in table 2 (BAT and PSES) or Table 3 of this part (NSPS and PSNS). A plant that manufactures a pesticide active ingredient listed in Table 1 of this part must also comply with the BAT effluent limitations and new source performance and pretreatment standards for priority pollutants listed in Tables 4, 5 and 6 of this part. The limitations in Table 4 of this part (BAT and NSPS) are applicable to existing and new direct discharge point sources that use End-of-Pipe biological treatment. The limitations in Table 5 of this part (BAT and NSPS) are applicable to existing and new direct discharge point sources that do not use end-of-pipe biological treatment. The limitations in Table 6 of this part (PSES and PSNS) are applicable to existing and new sources that discharge to Publicly Owned Treatment Works.

(e) In the case of lead and total cyanide, the discharge quantity (mass) shall be determined by multiplying the concentrations listed in the applicable tables in this subpart times the flow from non-complexed lead-bearing waste streams for lead and times the flow from non-complexed cyanide-bearing waste streams for total cyanide. Discharges of cyanide in cyanide-bearing waste streams are not subject to the cyanide limitation and standards of this subpart if the permit writer or control authority determines that the cyanide limitations and standards are not achievable due to elevated levels of non-amenable cyanide (i.e., cyanide that is not oxidized by chlorine treatment) that result from the unavoidable complexing of cyanide at the process source of the cyanide-bearing waste stream and establishes an alternative total cyanide or amenable cyanide limitation that reflects the best available technology economically achievable.

The determination must be based upon a review of relevant engineering, production, and sampling and analysis information, including measurements of both total and amenable cyanide in the waste stream. An analysis of the extent of complexing in the waste stream, based on the foregoing information, and its impact on cyanide treatability shall be set forth in writing and, for direct dischargers, be contained in the fact sheet required by 40 CFR 124.8.

[43 FR 44846, Sept. 29, 1978, as amended at 50 FR 40702, Oct. 4, 1985; 51 FR 44911, Dec. 15, 1986; 58 FR 50689, Sept. 28, 1993]

§ 455.21 Specialized definitions.

(a) *Organic active ingredients* means carbon-containing active ingredients used in pesticides, excluding metalloorganic active ingredients.

(b) *Total organic active ingredients* means the sum of all organic active ingredients covered by § 455.20(a) which are manufactured at a facility subject to this subpart.

(c) *Organic pesticide chemicals* means the sum of all organic active ingredients listed in § 455.20(b) which are manufactured at a facility subject to this subpart.

(d) *Process wastewater flow* means the sum of the average daily flows from the following wastewater streams: Process stream and product washes, equipment and floor washes, water used as solvent for raw materials, water used as reaction medium, spent acids, spent bases, contact cooling water, water of reaction, air pollution control blowdown, steam jet blowdown, vacuum pump water, pump seal water, safety equipment cleaning water, shipping container cleanout, safety shower water, contaminated storm water, and product/process laboratory quality control wastewater. Notwithstanding any other regulation, process wastewater flow for the purposes of this subpart does not include wastewaters from the production of intermediate chemicals.

(e) *Process wastewater pollutants* means those pollutants present in process wastewater flow.

[43 FR 44846, Sept. 29, 1978, as amended at 58 FR 50689, Sept. 28, 1993]

§ 455.22 Effluent limitations guidelines representing the degree of effluent reduction attainable by the application of the best practicable control technology currently available.

Except as provided in §§ 125.30 through 125.32, any existing point source subject to this subpart shall achieve the following effluent limitations representing the degree of effluent reduction attainable by the application of the best practicable control technology currently available (BPT). The following limitations establish the quantity or quality of pollutants or pollutant properties controlled by this paragraph which may be discharged from the manufacture of organic active ingredient:

Effluent characteristics	Effluent limitations	
	Maximum for any 1 day	Average of daily values for 30 consecutive days shall not exceed—
COD	13.000	9.0000
BOD5	7.400	1.6000
TSS	6.100	1.8000
Organic pesticide chemicals	.010	.0018
pH	(1)	(1)

[1] Within the range of 6.0 to 9.0.

NOTE: For COD, BOD5, and TSS, metric units: Kilogram/1,000 kg of total organic active ingredients. English units: Pound/1,000 lb of total organic active ingredients. For organic pesticide chemicals—metric units: Kilogram/1,000 kg of organic pesticide chemicals. English units: Pound/1,000 lb of organic pesticide chemicals.

[43 FR 44846, Sept. 29, 1978, as amended at 60 FR 33971, June 29, 1995]

§ 455.23 Effluent limitations guidelines representing the degree of effluent reduction attainable by the application of the best conventional pollutant control technology (BCT).

Except as provided in 40 CFR 125.30 through 125.32, any existing point source subject to this subpart must achieve the effluent limitations representing the degree of effluent reduction attainable by the application of

the best conventional pollutant control technology: The limitations for BOD, TSS and pH are the same as those specified in 40 CFR 455.22.

BCT EFFLUENT LIMITATIONS

Effluent Limitations

Pollutant or pollutant property	Maximum for any one day**	Average of daily values shall not exceed**
BOD5	7.400	1.6000
TSS	6.100	1.8000
pH	*	*

*Within the range 6.0 to 9.0

**Metric units: Kilogram pollutant/1,000 kg of total organic active ingredients.

English units: Pound pollutant/1,000 lb of total organic active ingredients

[58 FR 50689, Sept. 28, 1993]

§ 455.24 Effluent limitations guidelines representing the degree of effluent reduction attainable by the application of the best available control technology economically achievable (BAT).

Except as provided in 40 CFR 125.30 through 125.32, any existing point source subject to this subpart must achieve the effluent limitations representing the degree of effluent reduction attainable by the application of the best available technology as specified in 40 CFR 455.20(d). For the priority pollutants, such sources must achieve discharges not exceeding the quantity (mass) determined by multipying the process wastewater flow subject to this subpart as defined in 40 CFR 455.21 (d) times the concentrations listed in table 4 or table 5 of this part, as appropriate, of this subpart.

[58 FR 50690, Sept. 28, 1993]

§ 455.25 New source performance standards (NSPS).

(a) Any new source subject to this subpart which discharges process wastewater pollutants must achieve the new source performance standards specified in 40 CFR 455.20(d), and subject to 455.20(a), must meet the following standards for BOD5, TSS, COD and pH:

NEW SOURCE PERFORMANCE STANDARDS

Standards

Pollutant or pollutant property	Maximum for any one day**	Average of daily values shall not exceed**
COD	9.360	6.480
BOD5	5.328	1.1520
TSS	4.392	1.2960
pH	*	*

*Within the range 6.0 to 9.0

**Metric units: Kilogram pollutant /1,000 kg of total organic active ingredients.

English units: Pound pollutant/1,000 lb of total organic active ingredients

(b) For the priority pollutants, such sources must achieve discharges not exceeding the quantity (mass) determined by multiplying the process wastewater flow subject to this subpart as defined in 40 CFR 455.21(d) times the concentrations listed in table 4 or table 5 of this part, as appropriate, of this subpart.

[58 FR 50690, Sept. 28, 1993]

§ 455.26 Pretreatment standards for existing sources (PSES).

Except as provided in 40 CFR 403.7, any existing source subject to this subpart which introduces pollutants into a publicly owned treatment works must comply with 40 CFR part 403 and achieve the pretreatment standards for existing sources (PSES) as specified in 40 CFR 455.20(d). For the priority pollutants, such sources must achieve discharges not exceeding the quantity (mass) determined by multiplying the process wastewater flow subject to this subpart as defined in 40 CFR 455.21(d) times the concentrations listed in Table 6 of this part. If mass limitations have not been developed as required, the source shall achieve discharges not exceeding the concentration limitations listed in Table 6 of this part.

[58 FR 50690, Sept. 28, 1993]

§ 455.27 Pretreatment standards for new sources (PSNS).

Except as provided in 40 CFR 403.7, any new source subject to this subpart which introduces pollutants into a publicly owned treatment works must comply with 40 CFR part 403 and must achieve the pretreatment standards for new sources (PSNS) as specified in 40

CFR 455.20(d). For the priority pollutants, the source must achieve discharges not exceeding the quantity (mass) determined by multiplying the process wastewater flow subject to this subpart as defined in 40 CFR 455.21(d) times the concentrations listed in table 6 of this part. If mass limitations have not been developed as required, the source shall achieve discharges not exceeding the concentration limitations listed in table 6 of this part.

[58 FR 50690, Sept. 28, 1993]

Subpart B—Metallo-Organic Pesticide Chemicals Manufacturing Subcategory

§ 455.30 Applicability; description of the metallo-organic pesticide chemicals manufacturing subcategory.

The provisions of this subpart are applicable to discharges resulting from the manufacture of metallo-organic active ingredients containing mercury, cadmium, arsenic, or copper. The manufacture of intermediates used to manufacture the active ingredients are excluded from coverage by this subpart.

§ 455.31 Specialized definitions.

(a) ''Metallo-organic active ingredients'' means carbon containing active ingredients containing one or more metallic atoms in the structure.

§ 455.32 Effluent limitations guidelines representing the degree of effluent reduction attainable by the application of the best practicable control technology currently available.

Except as provided in §§ 125.30 through 125.32, any existing point source subject to this subpart, shall achieve the following effluent limitations representing the degree of effluent reduction attainable by the application of the best practicable control technology currently available (BPT). The following limitations establish the quantity or quality of pollutants or pollutant properties controlled by this paragraph which may be discharged from the manufacture of metallo-organic active ingredient: There shall be no discharge of process waste water pollutants to navigable waters.

[60 FR 33971, June 29, 1995]

§ 455.33 Effluent limitations guidelines representing the degree of effluent reduction attainable by the application of the best conventional pollutant control technology (BCT). [Reserved]

§ 455.34 Effluent limitations guidelines representing the degree of effluent reduction attainable by the application of the best available control technology economically achievable (BAT). [Reserved]

§ 455.35 New source performance standards (NSPS). [Reserved]

§ 455.36 Pretreatment standards for existing sources (PSES). [Reserved]

§ 455.37 Pretreatment standards for new sources (PSNS). [Reserved]

Subpart C—Pesticide Chemicals Formulating and Packaging Subcategory

§ 455.40 Applicability; description of the pesticide formulating, packaging and repackaging subcategory.

(a) The provisions of this subpart are applicable to discharges resulting from all pesticide formulating, packaging and repackaging operations except as provided in paragraphs (b), (c), (d), (e) and (f) of this section.

(b) The provisions of this subpart do not apply to repackaging of agricultural pesticides performed at refilling establishments, as described in § 455.60.

(c) The provisions of this subpart do not apply to wastewater discharges from: the operation of employee showers and laundry facilities; the testing of fire protection equipment; the testing and emergency operation of safety showers and eye washes; storm water; Department of Transportation (DOT) aerosol leak test bath water from noncontinuous overflow baths (batch baths) where no cans have burst from the time of the last water change-out; and on-site laboratories from cleaning analytical equipment and glassware and rinsing the retain sample container (except for the initial rinse of the retain sample container which is

considered a process wastewater source for this subpart).

(d) The provisions of this subpart do not apply to wastewater discharges from the formulation, packaging and/or repackaging of sanitizer products (including pool chemicals); microorganisms; inorganic wastewater treatment chemicals; group 1 mixtures and group 2 mixtures, as defined under § 455.10.

(e) The provisions of this subpart do not apply to wastewater discharges from the development of new formulations of pesticide products and the associated efficacy and field testing at on-site or stand-alone research and development laboratories where the resulting pesticide product is not produced for sale.

(f) The provisions of this subpart do not apply to wastewater discharges from the formulation, packaging and/or repackaging of liquid chemical sterilant products (including any sterilant or subordinate disinfectant claims on such products) for use on a critical or semi-critical device, as defined in Section 201 of the Federal Food, Drug and Cosmetic Act and in Section 2(u) of the Federal Insecticide, Fungicide and Rodenticide Act.

[61 FR 57549, Nov. 6, 1996]

§ 455.41 Special definitions.

(a) *Initial Certification Statement* for this subpart means a written submission to the appropriate permitting authority, *e.g.*, the local Control Authority (the POTW) or NPDES permit writer which must be signed by the responsible corporate officer as defined in 40 CFR 403.12(l) or 40 CFR 122.22 and which:

(1) Lists and describes those product families, process lines and/or process units for which the PFPR facility is implementing the Pollution Prevention Alternative (''P2 Alternative'');

(2) Describes the PFPR facility specific practices for each product family/process line/process unit which are to be practiced as part of the P2 Alternative;

(3) Describes any justification allowing modification to the practices listed in Table 8 to this part 455; and

(4) Lists the treatment system being used to obtain a P2 allowable discharge (as defined in 455.41).

(b) *Periodic Certification Statement* for this subpart means a written submission to the appropriate permitting authority, *e.g.*, the local Control Authority (the POTW) or NPDES permit writer, which states that the P2 Alternative is being implemented in the manner set forth in the control mechanism (for indirect dischargers) or NPDES permit (for direct dischargers) or that a justification allowing modification of the practices listed in Table 8 to this part 455 has been implemented resulting in a change in the pollution prevention practices conducted at the facility. The Periodic Certification Statement must be signed by the responsible corporate officer as defined in 40 CFR 403.12(l) or 40 CFR 122.22.

(c) *On-site Compliance Paperwork* for this subpart means data or information maintained in the offices of the PFPR facility which supports the initial and periodic certification statements as follows:

(1) Lists and describes those product families, process lines and/or process units for which the facility is implementing the P2 Alternative;

(2) Describes the facility specific practices for each product family/process line/process unit which are to be practiced as part of the P2 Alternative;

(3) Describes any justification allowing modification to the practices listed in Table 8 to this part 455;

(4) Includes a written discussion demonstrating that the treatment system being used contains the appropriate pollution control technologies (or equivalent systems/pesticide manufacturing systems) for removing the PAIs which may be found in the wastewater;

(5) Establishes a method for demonstrating to the permitting/control authority that the treatment system is well operated and maintained; and

(6) Includes a discussion of the rationale for choosing the method of demonstration.

(d) For Indirect Dischargers:

Pollution prevention (P2) allowable discharge (excluding interior wastewater sources, leak and spill clean-up water, and floor wash) for this subpart means the quantity of/concentrations of pollutants in PFPR process wastewaters that remain after a facility has demonstrated that it is using the specified

practices of the Pollution Prevention Alternative as listed in Table 8 to this part 455.

Pollution prevention (P2) allowable discharge for interior wastewater sources, leak and spill cleanup water, and floor wash for this subpart means the quantity of/concentrations of pollutants in PFPR process wastewaters that remain after a facility has demonstrated that it is using the specified practices of the Pollution Prevention Alternative as listed in Table 8 to this part 455 and that have been pretreated using appropriate pollution control technologies, as defined in § 455.10(g), or a pesticide manufacturer's treatment system, or an equivalent system, used individually, or in any combination to achieve a sufficient level of pollutant reduction. Pretreatment requirements may be modified or waived by the Control Authority (POTW) to the extent that removal credits have been granted by the POTW in accordance with 40 CFR 403.7, provided the granting of such credits does not result in pass through or interference as defined in 40 CFR 403.3 and complies with the provisions of 40 CFR 403.5. The facility must demonstrate that the appropriate pollution control technology is properly maintained and operated.

(e) For Direct Dischargers:

Pollution prevention (P2) allowable discharge for this subpart means the quantity of/concentrations of pollutants in PFPR process wastewaters that remain after a facility has demonstrated that it is using the specified practices of the Pollution Prevention Alternative as listed in Table 8 to this part 455 and that have been treated using appropriate pollution control technologies, as defined in § 455.10(g), or a pesticide manufacturer's treatment system, or an equivalent system, used individually, or in any combination to achieve a sufficient level of pollutant reduction. The facility must demonstrate that the appropriate pollution control technology is properly maintained and operated.

(f) *Process wastewater*, for this subpart, means all wastewater associated with pesticide formulating, packaging and repackaging except for sanitary water, non-contact cooling water and those wastewaters excluded from the applicability of the rule in § 455.40.

[61 FR 57549, Nov. 6, 1996]

§ 455.42 Effluent limitations guidelines representing the degree of effluent reduction attainable by the application of the best practicable control technology currently available, (BPT).

Except as provided in 40 CFR 125.30 through 125.32, any existing point source subject to this subpart shall achieve the following effluent limitations representing the degree of effluent reduction attainable by the application of the best practicable control technology currently available.

(a) Except as provided in paragraph (b) of this section, the following limitations establish the quantity or quality of pollutants or pollutant properties controlled by this paragraph which may be discharged from the formulation, packaging or repackaging of pesticides: There shall be no discharge of process wastewater pollutants to navigable waters.

NOTE: For existing PFPR/Manufacturer facilities, as defined in § 455.10(p), which are also subject to the provisions of § 455.22 or § 455.32, ''zero discharge'' means that permitting authorities shall provide no additional discharge allowance for those pesticide active ingredients (PAIs) in the pesticide formulating, packaging and repackaging wastewaters when those PAIs are also manufactured at the same facility.

(b) Any existing facility subject to paragraph (a) of this section may have a pollution prevention allowable discharge, as defined in § 455.41(e), of wastewater pollutants to navigable waters if the discharger agrees to NPDES permit conditions as follows:

(1) The discharger will meet the requirements of the Pollution Prevention Alternative listed in Table 8 to this part 455 (or received a modification by Best Professional Judgement for modifications not listed in Table 8 of this Part 455);

(2) The discharger will notify its NPDES permit writer at the time of renewal or modification of its permit, of its intent to utilize the Pollution Prevention Alternative by submitting to the NPDES permit writer an initial certification statement as described in § 455.41(a);

(3) The discharger will submit to its NPDES permitting authority a periodic certification statements as described in § 455.41(b) once each year of operation; and

(4) The discharger will maintain at the office of the facility and make available for inspection the on-site compliance paperwork as described in § 455.41(c).

[61 FR 57550, Nov. 6, 1996]

§ 455.43 Effluent limitations guidelines representing the degree of effluent reduction attainable by the application of the best conventional pollutant control technology (BCT).

Except as provided in 40 CFR 125.30 through 125.32, any existing point source subject to this subpart must achieve the effluent limitations representing the degree of effluent reduction attainable by the application of the best conventional pollutant control technology.

(a) Except as provided in paragraph (b) of this section, the BCT limitations are established as follows: There shall be no discharge of process wastewater pollutants to navigable waters.

NOTE: For existing PFPR/Manufacturer facilities, as defined in § 455.10(p), which are also subject to the provisions of §§ 455.23, *zero discharge* means that permitting authorities shall provide no discharge additional discharge allowance for those pesticide active ingredients (PAIs) in the pesticide formulating, packaging and repackaging wastewaters when those PAIs are also manufactured at the same facility.

(b) Any existing facility subject to paragraph (a) of this section may have a pollution prevention allowable discharge, as defined in § 455.41(e), of wastewater pollutants to navigable waters if the discharger agrees to NPDES permit conditions as follows:

(1) The discharger will meet the requirements of the Pollution Prevention Alternative listed in Table 8 to this Part 455 (or received a modification by Best Professional Judgement for modifications not listed in Table 8 of this Part 455);

(2) The discharger will notify its NPDES permit writer at the time of renewal or modification of its permit, of its intent to utilize the Pollution Prevention Alternative by submitting to the NPDES permit writer an initial certification statement as described in § 455.41(a);

(3) The discharger will submit to its NPDES permitting authority a periodic certification statement as described in § 455.41(b) once each year of operation; and

(4) The discharger will maintain at the office of the facility and make available for inspection the on-site compliance paperwork as described in § 455.41(c).

[61 FR 57550, Nov. 6, 1996]

§ 455.44 Effluent limitations guidelines representing the degree of effluent reduction attainable by the application of the best available control technology economically achievable (BAT).

Except as provided in 40 CFR 125.30 through 125.32, any existing point source subject to this subpart must achieve the effluent limitations representing the degree of effluent reduction attainable by the application of the best available technology (BAT).

(a) Except as provided in paragraph (b) of this section, the BAT limitations are established as follows: There shall be no discharge of process wastewater pollutants to navigable waters.

NOTE: For existing PFPR/Manufacturer facilities, as defined in § 455.10(p), which are also subject to the provisions of §§ 455.24, *zero discharge* means that permitting authorities shall provide no additional discharge allowance for those pesticide active ingredients (PAIs) in the pesticide formulating, packaging and repackaging wastewaters when those PAIs are also manufactured at the same facility.

(b) Any existing facility subject to paragraph (a) of this section may have a pollution prevention allowable discharge, as defined in § 455.41(e), of wastewater pollutants to navigable waters if the discharger agrees to NPDES permit conditions as follows:

(1) The discharger will meet the requirements of the Pollution Prevention Alternative listed in Table 8 to this Part 455 (or received a modification by Best Professional Judgement for modifications not listed on Table 8 of this Part 455);

(2) The discharger will notify its NPDES permitting authority at the time of renewal or modification of its

permit, of its intent to utilize the Pollution Prevention Alternative by submitting to the NPDES permit writer an initial certification statement as described in § 455.41(a);

(3) The discharger will submit to its NPDES permit writer a periodic certification statement as described in § 455.41(b) once each year of operation; and

(4) The discharger will maintain at the office of the facility and make available for inspection the on-site compliance paperwork as described in § 455.41(c).

[61 FR 57551, Nov. 6, 1996]

§ 455.45 New source performance standards (NSPS).

(a) Any new source, except as provided in paragraph (b) of this section, subject to this subpart which discharges process wastewater must meet the following standards: There shall be no discharge of process wastewater pollutants to navigable waters.

NOTE: For new PFPR/Manufacturer facilities, as defined in § 455.10(p), which are also subject to the provisions of §§ 455.25, *zero discharge* means that permitting authorities shall provide no additional discharge allowance for those pesticide active ingredients (PAIs) in the pesticide formulating, packaging and repackaging wastewaters when those PAIs are also manufactured at the same facility.

(b) Any new source subject to paragraph (a) of this section may have a pollution prevention allowable discharge, as defined in § 455.41(e), of wastewater pollutants to navigable waters if the discharger agrees to NPDES permit conditions as follows:

(1) The discharger will meet the requirements of the Pollution Prevention Alternative listed in Table 8 to this Part 455 (or received a modification by Best Professional Judgement for modifications not listed in Table 8 of this Part 455);

(2) The discharger will notify its NPDES permit writer at the time of submitting its application for a permit, of its intent to utilize the Pollution Prevention Alternative by submitting to the NPDES permit writer an initial certification statement as described in § 455.41(a);

(3) The discharger will submit to its NPDES permitting authority a periodic certification statement as described in § 455.41(b) once each year of operation; and

(4) The discharger will maintain at the office of the facility and make available for inspection the on-site compliance paperwork as described in § 455.41(c).

[61 FR 57551, Nov. 6, 1996]

§ 455.46 Pretreatment standards for existing sources (PSES).

(a) Except as provided in 40 CFR 403.7 and 403.13 or in paragraph (b) of this section, no later than November 6, 1999, any existing source subject to this subpart which introduces pollutants into a publicly owned treatment works must comply with 40 CFR part 403 and achieve PSES as follows: There shall be no discharge of process wastewater pollutants.

(b) Except as provided in 40 CFR 403.7 and 403.13, any existing source subject to paragraph (a) of this section which introduces pollutants into a publicly owned treatment works must comply with 40 CFR part 403 and may have a pollution prevention allowable discharge of wastewater pollutants, as defined in § 455.41(d), if the discharger agrees to control mechanism or pretreatment agreement conditions as follows:

(1) The discharger will meet the requirements of the Pollution Prevention Alternative listed in Table 8 to this Part 455 (or received a modification by Best Engineering Judgement for modifications not listed in Table 8 to this Part 455);

(2) The discharger will notify its local Control Authority at the time of renewing or modifying its individual control mechanism or pretreatment agreement of its intent to utilize the Pollution Prevention Alternative by submitting to the local Control Authority an initial certification statement as described in § 455.41(a);

(3) The discharger will submit to its local Control Authority a periodic certification statement as described in § 455.41(b) during the months of June and December of each year of operation; and

(4) The discharger will maintain at the offices of the facility and make available for inspection the on-site

compliance paperwork as described in § 455.41(c).

(c) Except as provided in 40 CFR 403.7 and 403.13, any existing source subject to § 455.46(b) which introduces pollutants into a publicly owned treatment works must comply with 40 CFR part 403 and may submit a request to its Control Authority to waive pretreatment of: floor wash; and/or a non-reusable final rinse of a triple rinse, if the concentrations of pesticide active ingredients and priority pollutants in those wastewater sources have been demonstrated to be too low to be effectively pretreated at the facility. The Control Authority may waive pretreatment for these two wastewaters only if the existing source makes the demonstrations and is in compliance with 40 CFR 403.5.

[61 FR 57551, Nov. 6, 1996]

§ 455.47 Pretreatment standards for new sources (PSNS).

(a) Except as provided in 40 CFR 403.7 and 403.13 or in paragraph (b) of this section, any new source subject to this subpart which introduces pollutants into a publicly owned treatment works must comply with 40 CFR part 403 and achieve PSNS as follows: There shall be no discharge of process wastewater pollutants.

(b) Except as provided in 40 CFR 403.7 and 403.13, any new source subject to paragraph (a) of this section which introduces pollutants into a publicly owned treatment works must comply with 40 CFR part 403 and may have a pollution prevention allowable discharge of wastewater pollutants, as defined in § 455.41(d), if the discharger agrees to control mechanism or pretreatment agreement conditions as follows:

(1) The discharger will meet the requirements of the Pollution Prevention Alternative listed in Table 8 to this Part 455 (or received a modification by Best Engineering Judgement for modifications not listed in Table 8 to this Part 455);

(2) The discharger will notify its local Control Authority at the time of submitting its application for an individual control mechanism or pretreatment agreement of its intent to utilize the Pollution Prevention Alternative by submitting to the local Control Authority an initial certification statement as described in § 455.41(a);

(3) The discharger will submit to its local Control Authority a periodic certification statement as described in § 455.41(b) during the months of June and December of each year of operation; and

(4) The discharger will maintain at the offices of the facility and make available for inspection the on-site compliance paperwork as described in § 455.41(c).

(c) Except as provided in 40 CFR 403.7 and 403.13, any new source subject to paragraph (b) of this section which introduces pollutants into a publicly owned treatment works must comply with 40 CFR part 403 and may submit a request to its Control Authority to waive pretreatment of: floor wash; and/or a non-reusable final rinse of a triple rinse, if the concentrations of pesticide active ingredients and priority pollutants in those wastewater sources have been demonstrated to be too low to be effectively pretreated at the facility. The Control Authority may waive pretreatment for these two wastewaters only if the new source makes the demonstrations and is in compliance with 40 CFR 403.5.

[61 FR 57552, Nov. 6, 1996]

Subpart D—Test Methods for Pesticide Pollutants

§ 455.50 Identification of test procedures.

The pesticide active ingredients to which this regulation applies and for which effluent limitations guidelines and standards are specified in this part are named, together with the Chemical Abstracts Service (CAS) number (provided to assist in identifying the pesticide active ingredient only) and analytical method(s) designation(s) in table 7 of this part. Except as provided in 40 CFR 136.5, the discharge parameter values required under the Clean Water Act must be determined by one of the analytical methods cited and described in table 7 of this part. Pesticide manufacturers may not use the analytical method cited in table 1B, table 1C,

or table 1D of 40 CFR part 136 to make these determinations (except where the method cited in those tables is identical to the method specified in table 7 of this part). The full texts of the analytical methods cited in table 7 of this part are contained in the ''Methods For The Determination of Nonconventional Pesticides In Municipal and Industrial Wastewater, Volume I,'' EPA 821–R–93–010A (August 1993 Revision I) and ''Volume II'', EPA 821–R–93–010B (August 1993) (the ''Compendium''). Each pesticide chemical manufacturer that is required to determine discharge parameter values under this part using one of the analytical methods cited in table 7 of this part must request in writing a copy of the Compendium from the permit authority or local control authority (as applicable) prior to determining such discharge parameter values, unless the manufacturer already has a copy.

[58 FR 50690, Sept. 28, 1993]

Subpart E—Repackaging of Agricultural Pesticides Performed at Refilling Establishments

SOURCE: 61 FR 57552, Nov. 6, 1996, unless otherwise noted.

§ 455.60 Applicability; description of repackaging of agricultural pesticides performed by refilling establishments subcategory.

(a) The provisions of this subpart are applicable to discharges resulting from all repackaging of agricultural pesticides performed by refilling establishments, as defined in § 455.10; whose primary business is wholesale or retail sales; and where no pesticide manufacturing, formulating or packaging occurs, except as provided in paragraphs (b), (c) and (d) of this section.

(b) The provisions of this subpart do not apply to wastewater discharges from custom application or custom blending, as defined in 40 CFR 167.3.

(c) The provisions of this subpart do not apply to wastewater discharges from: the operation of employee showers and laundry facilities; the testing of fire protection equipment; the testing and emergency operation of safety showers and eye washes; or storm water.

(d) The provisions of this subpart do not apply to wastewater discharges from the repackaging of microorganisms or Group 1 Mixtures, as defined under § 455.10, or non-agricultural pesticide products.

§ 455.61 Special definitions.

Process wastewater, for this subpart, means all wastewater except for sanitary water and those wastewaters excluded from the applicability of the rule in § 455.60.

§ 455.62 Effluent limitations guidelines representing the degree of effluent reduction attainable by the application of the best practicable pollutant control technology (BPT).

Except as provided in 40 CFR 125.30 through 125.32, any existing point source subject to this subpart must achieve effluent limitations representing the degree of effluent reduction attainable by the application of the best practicable pollutant control technology: There shall be no discharge of process wastewater pollutants.

§ 455.63 Effluent limitations guidelines representing the degree of effluent reduction attainable by the application of the best conventional pollutant control technology (BCT).

Except as provided in 40 CFR 125.30 through 125.32, any existing point source subject to this subpart must achieve effluent limitations representing the degree of effluent reduction attainable by the application of the best conventional pollution control technology: There shall be no discharge of process wastewater pollutants.

§ 455.64 Effluent limitations guidelines representing the degree of effluent reduction attainable by the application of the best available technology economically achievable (BAT).

Except as provided in 40 CFR 125.30 through 125.32, any existing point source subject to this subpart must achieve effluent limitations representing the degree of effluent reduction attainable by the application of

the best available technology economically achievable: There shall be no discharge of process wastewater pollutants.

§ 455.65 New source performance standards (NSPS).

Any new source subject to this subpart which discharges process wastewater pollutants must meet the following standards: There shall be no discharge of process wastewater pollutants.

§ 455.66 Pretreatment standards for existing sources (PSES).

Except as provided in 40 CFR 403.7 and 403.13, no later than November 6, 1999 subpart which introduces pollutants into a publicly owned treatment works must comply with 40 CFR part 403 and achieve the pretreatment standards for existing sources as follows: There shall be no discharge of process wastewater pollutants.

§ 455.67 Pretreatment standards for new sources (PSNS).

Except as provided in 40 CFR 403.7 and 403.13, any new source subject to this subpart which introduces pollutants into a publicly owned treatment works must comply with 40 CFR part 403 and achieve the pretreatment standards for existing sources as follows: There shall be no discharge of process wastewater pollutants.

TABLE 1 TO PART 455—LIST OF ORGANIC PESTICIDE ACTIVE INGREDIENTS

EPA census code	Pesticide code	Pesticide name	CAS No.
1	10501	Dicofol [1,1-Bis(chlorophenyl)-2,2,2-trichloroethanol]	00115–32–2
2	51501	Maleic Hydrazide	00123–33–1
3	42002	EDB [1,2-Ethylene dibromide]	00106–93–4
4	82901	Vancide TH [1,3,5-Triethylhexahydro-s-triazine]	07779–27–3
5	29001	Dichloropropene	00542–75–6
7	17901	Dowicil 75 [1-(3-Chloroallyl)-3,5,7-triaza-1-azoniaadamantanechloride].	04080–31–3
8	109901	Triadimefon	43121–43–3
9	44901	Hexachlorophene (nabac)	00070–30–4
10	55004	Tetrachlorophene	01940–43–8
11	55001	Dichlorophene	00097–23–4
12	84001	Dichlorvos	00062–73–7
13	102401	Landrin-2 [2,3,5-trimethylphenylmethylcarbamate]	02686–99–9
14	82601	Fenac [2,3,6-Trichlorophenylacetic acid]	00085–34–7
14	(1)	Fenac Salts and Esters	(1)
15	82001	2,4,5-T [2,4,5-Trichlorophenoxyacetic acid]	00093–76–5
15	(1)	2,4,5-T Salts and Esters	(1)
16	30001	2,4-D [2,4-Dichlorophenoxyacetic acid]	00094–75–7
16	(1)	2,4-D Salts and Esters	(1)
17	30801	2,4-DB [2,4-Dichlorophenoxybutyric acid]	00094–82–6
17	(1)	2,4-DB Salts and Esters	(1)
18	80811	Anilazine [2,4-Dichloro-6-(o-chloroanilino)-s-triazine]	00101–05–3
19	36001	Dinocap	39300–45–3
20	31301	Dichloran (2,6-dichloro-4-nitroaniline)	00099–30–9
21	8707	Busan 90 [2-Bromo-4-hydroxyacetophenone]	02491–38–5
22	15801	Mevinphos	07786–34–7
23	39001	Sulfallate [2-chloroallyldiethyldithiocarbamate]	00095–06–7
24	84101	Chlorfenvinphos	00470–90–6
25	10010	Cyanazine	21725–46–2
26	19101	Propachlor	01918–16–7
27	30501	MCPA [2-Methyl-4-chlorophenoxyacetic acid]	00094–74–6
27	(1)	MCPA Salts and Esters	(1)
28	99901	Octhilinone	26530–20–1
29	67703	Pindone	00083–26–1
30	31401	Dichlorprop [2-(2,4-Dichlorophenoxy) propionic acid]	00120–36–5
30	(1)	Dichlorprop Salts and Esters	(1)
31	31501	MCPP [2-(2-Methyl-4-chlorophenoxy)propionic acid]	00093–65–2
31	(1)	MCPP Salts and Esters	(1)
32	60101	Thiabendazole	00148–79–8
33	80815	Belclene 310 [2-(methylthio)-4-(ethylamino)-6-(1,2-dimethylamino)-s-triazine].	22936–75–0
34	21201	Cloprop [2-(m-Chlorophenoxy)propionic acid]	00101–10–0
34	(1)	Cloprop Salts and Esters	(1)
35	35603	TCMTB [2-(Thiocyanomethylthio)benzothiazole]	21564–17–0
36	99001	HAE [2-((Hydroxymethyl)amino) ethanol	34375–28–5
37	6770	Chlorophacinone	03691–35–8

EPA census code	Pesticide code	Pesticide name	CAS No.
38	102401	Landrin-1 [3,4,5-trimethylphenylmethylcarbamate]	02686–99–9
39	101701	Pronamide	23950–58–5
40	100501	Methiocarb	02032–65–7
41	28201	Propanil	00709–98–8
42	107801	3-Iodo-2-propynyl butylcarbamate	55406–53–6
43	86001	3-(a-Acetonylfurfuryl)-4-hydroxycoumarin [Coumafuryl]	00117–52–2
43	(1)	Coumafuryl Salts and Esters	(1)
44	37507	DNOC (4,6-dinitro-*o*-cresol)	00534–52–1
45	101101	Metribuzin	21087–64–9
46	19401	CPA (4-chlorophenoxyacetic acid)	00122–88–3
46	(1)	CPA Salts and Esters	(1)
47	19201	MCPB [4-(2-Methyl-4-chlorophenoxy)butyric acid]	00094–81–5
47	(1)	MCPB Salts and Esters	(1)
48	44401	Aminocarb [4-(dimethylamino)-m-tolylmethylcarbamate]	02032–59–9
49	84701	Etridiazole	02593–15–9
50	55501	Ethoxyquin	00091–53–2
51	59804	Quinoliol sulfate (8-Quinoliol sulfate)	00134–31–6
52	103301	Acephate	30560–19–1
53	114401	Acifluorfen	50594–66–6
53	114402	Acifluorfen Salts and Esters	62476–59–9
54	90501	Alachlor	15972–60–8
55	98301	Aldicarb	00116–06–3
56	69105	Hyamine 3500 [Alkyl* dimethyl benzyl ammonium chloride* (50% C14, 40% C12, 10% C16)].	68424–85–1
57	4001	Allethrin (all isomers and allethrin coil)	00584–79–2
58	80801	Ametryn	00834–12–8
59	106201	Amitraz	33089–61–1
60	80803	Atrazine	01912–24–9
61	105201	Bendiocarb	22781–23–3
62	99101	Benomyl and Carbendazim	17804–35–2
63	8901	Benzene Hexachloride	00608–73–1
64	9501	Benzyl benzoate	00120–51–4
65	10101	Lethane 384 [Beta-Thiocyanoethyl esters of mixed fatty acids containing from 10–18 carbons].	00301–11–1
66	104301	Bifenox	42576–02–3
68	12301	Bromacil	00314–40–9
68	12302	Bromacil, lithium	53404–19–6
69	35301	Bromoxynil	01689–84–5
69	35302	Bromoxynil octanoate	01689–99–2
70	112301	Butachlor	23184–66–9
70	101401	Giv-gard [β-Bromo-β-nitrostyrene]	07166–19–0
73	81701	Captafol	02425–06–1
74	81301	Captan	00133–06–2
75	56801	Carbaryl [Sevin]	00063–25–2
76	90601	Carbofuran	01563–66–2
77	90602	Carbosulfan	55285–14–8
78	29901	Chloramben	00133–90–4
78	(1)	Chloramben Salts and Esters	(1)
79	58201	Chlordane	00057–74–9
80	27301	Chloroneb	02675–77–6
81	81501	Chloropicrin	00076–06–2
82	81901	Chlorothalonil	01897–45–6
83	25501	Chloroxuron	01982–47–4
84	83701	Stirofos	00961–11–5
85	59102	Chlorpyrifos methyl	05598–13–0
86	59101	Chlorpyrifos	02921–88–2
87	14504	Mancozeb	08018–01–7
90	109301	Fenvalerate	51630–58–1
91	43401	Cycloheximide	00066–81–9
92	28901	Dalapon (2,2-dichloropropionic acid)	00075–99–0
92	(1)	Dalapon Salts and Esters	(1)
93	27501	Dienochlor	02227–17–0
94	57601	Demeton [O,O-Diethyl O-(and S-) (2-ethylthio)ethyl) phosphorothioate].	08065–48–3
95	104801	Desmedipham	13684–56–5
96	14502	Diammonium ethylenebisdithiocarbamate	03566–10–7
97	11301	DBCP [Dibromo-3-chloropropane]	00096–12–8
98	29801	Dicamba [3,6-Dichloro-o-anisic acid]	01918–00–9
98	(1)	Dicamba Salts and Esters	(1)
99	29601	Dichlone (Phygon)	00117–80–6
100	103401	Thiophanate ethyl	23564–06–9
101	32101	Perthane [Diethyl diphenyl dichloroethane and related compounds].	00072–56–0

EPA census code	Pesticide code	Pesticide name	CAS No.
102	86501	EXD [Diethyl dithiobis (thionoformate)]	00502–55–6
103	57801	Diazinon	00333–41–5
104	108201	Diflubenzuron	35367–38–5
105	69122	Benzethonium chloride	00121–54–0
106	35001	Dimethoate	00060–51–5
107	53501	Parathion methyl	00298–00–0
108	35201	Dicrotophos	00141–66–2
109	58801	Crotoxyphos	07700–17–6
110	78701	DCPA [Dimethyl 2,3,5,6-tetrachloroterephthalate]	01861–32–1
111	57901	Trichlorofon	00052–68–6
112	37505	Dinoseb	00088–85–7
113	37801	Dioxathion	00078–34–2
114	67701	Diphacinone	00082–66–6
115	36601	Diphenamid	00957–51–7
116	38501	Diphenylamine	00122–39–4
116	47201	MGK 326 [Dipropyl isocinchomeronate]	00113–48–4
118	63301	Nabonate [Disodium cyanodithioimidocarbonate]	00138–93–2
119	35505	Diuron	00330–54–1
120	44303	Metasol DGH [Dodecylguanidine hydrochloride]	13590–97–1
121	44301	Dodine (dodecylquanidine acetate)	02439–10–3
122	79401	Endosulfan [Hexachlorohexahydromethano-2,4,3-benzodioxathiepin-3-oxide].	00115–29–7
123	38901	Endothall	00145–73–3
123	(1)	Endothall Salts and Esters	(1)
124	41601	Endrin	00072–20–8
125	113101	Ethalfluralin	55283–68–6
126	58401	Ethion	00563–12–2
127	41101	Ethoprop	13194–48–4
128	100601	Fenamiphos	22224–92–6
129	28801	Chlorobenzilate	00510–15–6
130	41405	Butylate	02008–41–5
131	59901	Famphur	00052–85–7
132	206600	Fenarimol	60168–88–9
133	53301	Fenthion	00055–38–9
134	34801	Ferbam	14484–64–1
135	35503	Fluometuron	02164–17–2
136	75002	Fluoroacetamide	00640–19–7
137	81601	Folpet	00133–07–3
138	103601	Glyphosate [N-(Phosphonomethyl) glycine]	01071–83–6
138	(1)	Glyphosate Salts and Esters	(1)
139	103602	Glyphosine	02439–99–8
140	44801	Heptachlor	00076–44–8
141	115601	Cycloprate	54460–46–7
142	107201	Hexazinone	51235–04–2
143	109401	Isofenphos	25311–71–1
144	100201	Isopropalin	33820–53–0
145	47601	Propham	00122–42–9
146	97401	Karbutilate	04849–32–5
147	9001	Lindane	00058–89–9
148	35506	Linuron	00330–55–2
149	39504	Malachite green [Ammonium(4-(p-(dimethylamino)-alpha-phenylbenzylidine)-2,5-cyclohexadien-1-ylidene)-dimethyl chloride].	00569–64–2
150	57701	Malathion	00121–75–5
151	14505	Maneb	12427–38–2
152	34802	Manganous dimethyldithiocarbamate	15339–36–3
153	114001	Mefluidide [N-(2,4-dimethyl-5-(((trifluoromethyl) sulfonyl)-amino) phenyl acetamide].	53780–34–0
153	(1)	Mefluidide Salts and Esters	(1)
154	101201	Methamidophos	10265–92–6
155	100301	Methidathion	00950–37–8
156	90301	Methomyl	16752–77–5
157	105401	Methoprene	40596–69–8
158	34001	Methoxychlor	00072–43–5
159	69134	Methylbenzethonium chloride	15716–02–6
160	53201	Methylbromide	00074–83–9
162	69129	Hyamine 2389 [Methyldodecylbenzyl trimethyl ammonium chloride 80% and methyldodecylxylylene bis (trimethylammoniumchloride) 20%].	01399–80–0
163	68102	Methylenebisthiocyanate	06317–18–6
164	54101	Quinmethionate	02439–01–2
165	108801	Metolachlor	51218–45–2
166	44201	Mexacarbate	00315–18–4

EPA census code	Pesticide code	Pesticide name	CAS No.
167	14601	Metiram	09006–42–2
168	35502	Monuron TCA	00140–41–0
169	35501	Monuron	00150–68–5
170	103001	Napropamide	15299–99–7
171	80301	Deet	00134–62–3
172	14503	Nabam	00142–59–6
173	34401	Naled	00300–76–5
174	35801	Norea	18530–56–8
175	105801	Norflurazon	27314–13–2
176	30701	N-1-Naphthylphthalimide	05333–99–3
176	30702	Naptalam [N-1-Naphthylphthalamic acid]	00132–66–1
176	30703	Naptalam Salts and Esters	00132–67–2
177	57001	MGK 264 [N-2-Ethylhexyl bicycloheptene dicarboximide]	00136–45–8
178	84301	Benfluralin	01861–40–1
179	79501	Sulfotepp	03689–24–5
180	79101	Aspon	03244–90–4
181	36501	Coumaphos	00056–72–4
182	32701	Fensulfothion	00115–90–2
183	32501	Disulfoton	00298–04–4
184	105901	Fenitrothion	00122–14–5
185	59201	Phosmet	00732–11–6
186	58001	Azinphos Methyl	00086–50–0
187	58702	Oxydemeton methyl	00301–12–2
192	(1)	Organo-tin pesticides	(1)
194	104201	Oryzalin	19044–88–3
195	103801	Oxamyl	23135–22–0
196	111601	Oxyfluorfen	42874–03–3
197	111501	Bolstar [Sulprofos]	35400–43–2
198	219900	Sulprofos Oxon	38527–90–1
199	41801	Santox (O-Ethyl O-(p-nitrophenyl) phenylphosphonothioate	02104–64–5
200	41701	Fonofos	00944–22–9
201	47802	Propoxur (o-Isopropylphenylmethylcarbamate)	00114–26–1
202	57501	Parathion	00056–38–2
203	108501	Pendimethalin	40487–42–1
204	56502	Pentachloronitrobenzene	00082–68–8
205	63001	Pentachlorophenol	00087–86–5
206	63003	Pentachlorophenol Salts and Esters	00131–52–2
207	108001	Perfluidone	37924–13–3
208	109701	Permethrin	52645–53–1
209	98701	Phenmedipham	13684–63–4
210	64501	Phenothiazine	00092–84–2
211	64103	Phenylphenol	00090–43–7
212	57201	Phorate	00298–02–2
213	97701	Phosalone	02310–17–0
214	18201	Phosphamidon	13171–21–6
215	5101	Picloram	01918–02–1
215	5104	Picloram Salts and Esters	02545–60–0
216	67501	Piperonyl butoxide	00051–03–6
217	69183	PBED (Busan 77) [Poly (oxyethylene (dimethylimino) ethylene (dimethylimino) ethylene dichloride].	31512–74–0
218	34803	Busan 85 [Potassium dimethyldithiocarbamate]	00128–03–0
219	102901	Busan 40 [Potassium N-hydroxymethyl-N-methyldithiocarbamate].	51026–28–9
220	39002	KN Methyl [Potassium N-methyldithiocarbamate]	00137–41–7
221	101301	Metasol J26 [Potassium N-(alpha-(nitroethyl) benzyl)-ethylene-diamine].	53404–62–9
222	111401	Profenofos	41198–08–7
223	80804	Prometon	01610–18–0
224	80805	Prometryn	07287–19–6
225	97601	Propargite	02312–35–8
226	80808	Propazine	00139–40–2
227	77702	Propionic acid	00079–09–4
228	119301	Propamocarb and Propamocarb HCL	24579–73–5
229	69004	Pyrethrin coils	00121–21–1
230	69001	Pyrethrin I.	
231	69002	Pyrethrum (other than pyrethrins)	08003–34–7
232	69006	Pyrethrin II	00121–29–9
233	97801	Resmethrin	10453–86–8
234	58301	Ronnel	00299–84–3
235	71003	Rotenone	00083–79–4
236	74801	DEF [S,S,S-Tributyl phosphorotrithioate]	00078–48–8
237	35509	Siduron	01982–49–6
238	82501	Silvex [2-(2,4,5-Trichlorophenoxypropionic acid)]	00093–72–1

EPA census code	Pesticide code	Pesticide name	CAS No.
238	(1)	Silvex Salts and Esters	(1)
239	80807	Simazine	00122–34–9
240	103901	Bentazon	25057–89–0
241	34804	Carbam-S [Sodium dimethyldithiocarbanate]	00128–04–1
242	75003	Sodium monofluoroacetate	00062–74–8
243	39003	Vapam [Sodium methyldithiocarbamate]	00137–42–8
244	57101	Sulfoxide	00120–62–7
245	41301	Cycloate	01134–23–2
246	41401	EPTC [S-Ethyl dipropylthiocarbamate]	00759–94–4
247	41402	Molinate	02212–67–1
248	41403	Pebulate	01114–71–2
249	41404	Vernolate	01929–77–7
250	35604	HPTMS [S-(2-Hydroxypropyl) thiomethanesulfonate]	29803–57–4
251	9801	Bensulide	00741–58–2
252	105501	Tebuthiuron	34014–18–1
253	59001	Temephos	03383–96–8
254	12701	Terbacil	05902–51–2
255	105001	Terbufos	13071–79–9
256	80814	Terbuthylazine	05915–41–3
257	80813	Terbutryn	00886–50–0
258	63004	Tetrachlorophenol	25167–83–3
258	63007	Tetrachlorophenol Salts and Esters	(1)
259	35602	Dazomet	00533–74–4
260	102001	Thiophanate methyl	23564–05–8
261	79801	Thiram	00137–26–8
262	80501	Toxaphene	08001–35–2
263	74901	Merphos [Tributyl phosphorotrithioate]	00150–50–5
264	36101	Trifluralin	01582–09–8
265	86002	Warfarin [3-(a-Acetonylbenzyl)-4-hydroxycoumarin]	00081–81–2
265	(1)	Warfarin Salts and Esters	(1)
266	51705	Zinc MBT [Zinc 2-mercaptobenzothiazolate]	00155–04–4
267	14506	Zineb	12122–67–7
268	34805	Ziram	00137–30–4
269	78802	S-(2,3,3-trichloroallyl) diisopropylthiocarbamate	02303–17–5
270	69005	Phenothrin	26002–80–2
271	69003	Tetramethrin	07696–12–0
272	18301	Chloropropham	00101–21–3

Note:
[1] Multiple compounds for active ingredient.

[58 FR 50691, Sept. 28, 1993]

TABLE 2 TO PART 455—ORGANIC PESTICIDE ACTIVE INGREDIENT EFFLUENT LIMITATIONS BEST AVAILABLE TECHNOLOGY ECONOMICALLY ACHIEVABLE (BAT) AND PRETREATMENT STANDARDS FOR EXISTING SOURCES (PSES)

Pesticide	kg/kkg (lb/1,000 lb) Pounds of pollutant per 1000 lbs. product		Notes
	Daily maximum shall not exceed	Monthly average shall not exceed	
2,4-D	1.97×10^{-3}	6.40×10^{-4}	.....
2,4-D Salts and Esters	(1)	(1)	.....
2,4-DB Salts and Esters	(1)	(1)	.....
Acephate	6.39×10^{-4}	1.97×10^{-4}	.....
Acifluorfen	2.45	9.3×10^{-1}	.....
Alachlor	5.19×10^{-3}	1.54×10^{-3}	.....
Aldicarb	7.23×10^{-4}	3.12×10^{-4}	.....
Ametryn	7.72×10^{-3}	2.53×10^{-3}	.....
Atrazine	5.12×10^{-3}	1.72×10^{-3}	.....
Azinphos Methyl	2.74×10^{-2}	1.41×10^{-2}	.....
Benfluralin	3.22×10^{-4}	1.09×10^{-4}	1
Benomyl and Carbendazim	3.50×10^{-2}	8.94×10^{-3}	2
Bolstar	1.69×10^{-2}	8.72×10^{-3}	.....
Bromacil	3.83×10^{-1}	1.16×10^{-1}	.....
Bromacil, lithium	(1)	(1)	.....
Bromoxynil	3.95×10^{-3}	1.27×10^{-3}	.....
Bromoxynil octanoate	3.95×10^{-3}	1.27×10^{-3}	.....
Busan 40 [Potassium N-hydroxymethyl -N- methyldithiocarbamate]	5.74×10^{-3}	1.87×10^{-3}	.....
Busan 85 [Potassium dimethyldithiocarbamate]	5.74×10^{-3}	1.87×10^{-3}	

Pesticide	kg/kkg (lb/1,000 lb) Pounds of pollutant per 1000 lbs. product		Notes
	Daily maximum shall not exceed	Monthly average shall not exceed	
Butachlor	5.19×10^{-3}	1.54×10^{-3}	.....
Captafol	4.24×10^{-6}	1.31×10^{-6}	.....
Carbam-S [Sodium dimethyldithiocarbamate]	5.74×10^{-3}	1.87×10^{-3}	.....
Carbaryl	1.6×10^{-3}	7.3×10^{-4}	.....
Carbofuran	1.18×10^{-4}	2.80×10^{-5}	.....
Chloroneb	8.16×10^{-2}	3.31×10^{-2}	.....
Chlorothalonil	1.51×10^{-3}	4.57×10^{-4}	.....
Chlorpyrifos	8.25×10^{-4}	2.43×10^{-4}	.....
Cyanazine	1.03×10^{-2}	3.33×10^{-3}	.....
Dazomet	5.74×10^{-3}	1.87×10^{-3}	.....
DCPA	7.79×10^{-2}	2.64×10^{-2}	.....
DEF [S,S,S-Tributyl phosphorotrithioate]	1.15×10^{-2}	5.58×10^{-3}	.....
Diazinon	2.82×10^{-3}	1.12×10^{-3}	.....
Dichlorprop Salts and Esters	(1)	(1)	.....
Dichlorvos	9.6×10^{-5}	2.95×10^{-5}	.....
Dinoseb	4.73	1.43	.....
Dioxathion	3.40×10^{-2}	1.29×10^{-2}	.....
Disulfoton	7.33×10^{-3}	3.79×10^{-3}	.....
Diuron	3.15×10^{-2}	1.4×10^{-2}	.....
Endothall Salts and Esters	(1)	(1)	.....
Endrin	2.2×10^{-2}	5.1×10^{-3}	.....
Ethalfluralin	3.22×10^{-4}	1.09×10^{-4}	1
Ethion	5.51×10^{-3}	1.57×10^{-3}	.....
Fenarimol	1.02×10^{-1}	3.61×10^{-2}	.....
Fensulfothion	1.48×10^{-2}	7.64×10^{-3}	.....
Fenthion	1.83×10^{-2}	9.45×10^{-3}	.....
Fenvalerate	5.40×10^{-3}	2.08×10^{-3}	.....
Heptachlor	8.8×10^{-3}	2.9×10^{-3}	.....
Isopropalin	7.06×10^{-3}	2.49×10^{-3}	1
KN Methyl [Potassium N-methyldithiocarbamate]	5.74×10^{-3}	1.87×10^{-3}	.....
Linuron	2.69×10^{-3}	1.94×10^{-3}	.....
Malathion	2.35×10^{-4}	9.55×10^{-5}	.....
MCPA Salts and Esters	(1)	(1)	.....
MCPP Salts and Esters	(1)	(1)	.....
Merphos	1.15×10^{-2}	5.58×10^{-3}	.....
Methamidophos	1.46×10^{-2}	7.53×10^{-3}	.....
Methomyl	3.82×10^{-3}	1.76×10^{-3}	.....
Methoxychlor	3.23×10^{-3}	1.31×10^{-3}	.....
Metribuzin	1.36×10^{-2}	7.04×10^{-3}	.....
Mevinphos	1.44×10^{-4}	5.10×10^{-5}	.....
Nabam	5.74×10^{-3}	1.87×10^{-3}	.....
Nabonate	5.74×10^{-3}	1.87×10^{-3}	.....
Naled	(1)	(1)	.....
Norflurazon	7.20×10^{-4}	3.10×10^{-4}	.....
Organo-tin pesticides	1.72×10^{-2}	7.42×10^{-3}	3
Parathion	7.72×10^{-4}	3.43×10^{-4}	.....
Parathion methyl	7.72×10^{-4}	3.43×10^{-4}	.....
PCNB	5.75×10^{-4}	1.90×10^{-4}	.....
Pendimethalin	1.30×10^{-2}	3.99×10^{-3}	
Permethrin	2.32×10^{-4}	6.06×10^{-5}	.....
Phorate	3.12×10^{-4}	9.37×10^{-5}	.....
Phosmet	(1)	(1)	4
Prometon	7.72×10^{-3}	2.53×10^{-3}	.....
Prometryn	7.72×10^{-3}	2.53×10^{-3}	.....
Pronamide	6.64×10^{-4}	2.01×10^{-4}	.....
Propachlor	5.19×10^{-3}	1.54×10^{-3}	.....
Propanil	1.06×10^{-3}	4.84×10^{-4}	.....
Propazine	7.72×10^{-3}	2.53×10^{-3}	.....
Pyrethrin I and Pyrethrin II	1.24×10^{-2}	3.33×10^{-3}	
Simazine	7.72×10^{-3}	2.53×10^{-3}	.....
Stirofos	4.10×10^{-3}	1.35×10^{-3}	.....
TCMTB	3.89×10^{-3}	1.05×10^{-3}	.....
Tebuthiuron	9.78×10^{-2}	3.40×10^{-2}	.....
Terbacil	3.83×10^{-1}	1.16×10^{-1}	.....
Terbufos	4.92×10^{-4}	1.26×10^{-4}	.....
Terbuthylazine	7.72×10^{-3}	2.53×10^{-3}	.....
Terbutryn	7.72×10^{-3}	2.53×10^{-3}	.....
Toxaphene	1.02×10^{-2}	3.71×10^{-3}	.....

Pesticide	kg/kkg (lb/1,000 lb) Pounds of pollutant per 1000 lbs. product		Notes
	Daily maximum shall not exceed	Monthly average shall not exceed	
Triadimefon	6.52×10^{-2}	3.41×10^{-2}	.....
Trifluralin	3.22×10^{-4}	1.09×10^{-4}	1
Vapam [Sodium methyldithiocarbamate]	5.74×10^{-3}	1.87×10^{-3}	.....
Ziram [Zinc dimethyldithiocarbanate]	5.74×10^{-3}	1.87×10^{-3}	.....

[1] No discharge of process wastewater pollutants.

Notes:

1 Monitor and report as total Trifluralin.
2 Pounds of product include Benomyl and any Carbendazim production not converted to Benomyl.
3 Monitor and report as total tin.
4 Applies to purification by recrystalization portion of the process.

[58 FR 50695, Sept. 28, 1993, as amended at 63 FR 39443, July 22, 1998]

Table 3 To Part 455—Organic Pesticide Active Ingredient New Source Performance Standards (NSPS) and Pretreatment Standards for New Sources (PSNS)

Pesticide	kg/kkg (lb/1,000 lb) pounds of pollutant per 1000 lbs product		Notes
	Daily maximum shall not exceed	Monthly average shall not exceed	
2,4-D	1.42×10^{-3}	4.61×10^{-4}	
2,4-D Salts and Esters	([1])	([1])	
2,4-DB Salts and Esters	([1])	([1])	
Acephate	6.39×10^{-4}	1.97×10^{-4}	
Acifluorfen	1.77	6.69×10^{-1}	
Alachlor	3.74×10^{-3}	1.11×10^{-3}	
Aldicarb	5.21×10^{-4}	2.25×10^{-4}	
Ametryn	5.56×10^{-3}	1.82×10^{-3}	
Atrazine	3.69×10^{-3}	1.24×10^{-3}	
Benfluralin	3.22×10^{-4}	1.09×10^{-4}	1
Benomyl and Carbendazom	2.52×10^{-2}	6.44×10^{-3}	2
Bolstar	1.22×10^{-2}	6.28×10^{-3}	
Bromacil	2.76×10^{-1}	8.36×10^{-2}	
Bromacil, lithium	([1])	([1])	
Bromoxynil	2.84×10^{-3}	9.14×10^{-4}	
Bromoxynil Octanoate	2.84×10^{-3}	9.14×10^{-4}	
Busan 40 [Potassium N-hydroxymethyl-N-methyldithiocarbamate]	4.14×10^{-3}	1.35×10^{-3}	
Busan 85 [Potassium dimethyldithiocarbamate]	4.14×10^{-3}	1.35×10^{-3}	
Butachlor	3.74×10^{-3}	1.11×10^{-3}	
Captafol	4.24×10^{-6}	1.31×10^{-6}	
Carbam-S [Sodium dimethyldithiocarbanate]	4.14×10^{-3}	1.35×10^{-3}	
Carbaryl	1.18×10^{-3}	5.24×10^{-4}	
Carbofuran	1.18×10^{-4}	2.80×10^{-5}	
Chloroneb	5.87×10^{-2}	2.39×10^{-2}	
Chlorothalonil	1.09×10^{-3}	3.29×10^{-4}	
Chlorpyrifos	5.94×10^{-4}	1.75×10^{-4}	
Cyanazine	7.42×10^{-3}	2.40×10^{-3}	
Dazomet	4.14×10^{-3}	1.35×10^{-3}	
DCPA	5.61×10^{-2}	1.90×10^{-2}	
DEF [S,S,S-Tributyl phosphorotrithioate]	1.15×10^{-2}	5.58×10^{-3}	
Diazinon	2.05×10^{-3}	8.13×10^{-4}	
Dichlorprop Salts and Esters	([1])	([1])	
Dichlorvos	6.88×10^{-5}	2.13×10^{-5}	
Dinoseb	3.41	1.03	
Dioxathion	2.54×10^{-2}	9.31×10^{-3}	
Disulfoton	5.28×10^{-3}	2.72×10^{-3}	
Diuron	2.27×10^{-2}	1.01×10^{-2}	
Endothall Salts and Esters	([1])	([1])	
Endrin	1.57×10^{-2}	3.69×10^{-3}	
Ethalfluralin	3.22×10^{-4}	1.09×10^{-4}	1
Ethion	3.97×10^{-3}	1.33×10^{-3}	
Fenarimol	1.02×10^{-1}	3.61×10^{-2}	
Fensulfothion	1.06×10^{-2}	5.50×10^{-3}	
Fenthion	1.32×10^{-2}	6.79×10^{-3}	
Fenvalerate	3.91×10^{-3}	1.50×10^{-3}	
Guthion	1.97×10^{-2}	1.02×10^{-2}	
Heptachlor	6.31×10^{-3}	2.06×10^{-3}	

Pesticide	kg/kkg (lb/1,000 lb) pounds of pollutant per 1000 lbs product		Notes
	Daily maximum shall not exceed	Monthly average shall not exceed	
Isopropalin	5.07×10^{-3}	1.82×10^{-3}	
KN Methyl [Potassium N-methyldithiocarbamate]	4.14×10^{-3}	1.35×10^{-3}	
Linuron	1.94×10^{-3}	1.40×10^{-3}	
Malathion	1.69×10^{-4}	6.88×10^{-5}	
MCPA Salts and Esters	(1)	(1)	
MCPP Salts and Esters	(1)	(1)	
Merphos	1.15×10^{-2}	5.58×10^{-3}	
Methamidophos	1.05×10^{-2}	5.42×10^{-3}	
Methomyl	2.75×10^{-3}	1.27×10^{-3}	
Methoxychlor	2.34×10^{-3}	9.25×10^{-4}	
Metribuzin	9.80×10^{-3}	5.06×10^{-3}	
Mevinphos	1.03×10^{-4}	3.69×10^{-5}	
Nabam	4.14×10^{-3}	1.35×10^{-3}	
Nabonate	4.14×10^{-3}	1.35×10^{-3}	
Naled	(1)	(1)	
Norflurazon	7.20×10^{-4}	3.10×10^{-4}	
Organo-tin pesticides	1.25×10^{-2}	5.36×10^{-3}	3
Parathion Ethyl	5.56×10^{-4}	2.45×10^{-4}	
Parathion Methyl	5.56×10^{-4}	2.45×10^{-4}	
PCNB	4.16×10^{-4}	1.38×10^{-4}	
Pendimethalin	1.30×10^{-2}	3.99×10^{-3}	
Permethrin	1.68×10^{-4}	4.39×10^{-5}	
Phorate	3.12×10^{-4}	9.37×10^{-5}	
Phosmet	(1)	(1)	4
Prometon	5.56×10^{-3}	1.82×10^{-3}	
Prometyrn	5.56×10^{-3}	1.82×10^{-3}	
Pronamide	4.78×10^{-4}	1.45×10^{-4}	
Propachlor	3.74×10^{-3}	1.11×10^{-3}	
Propanil	7.63×10^{-4}	3.48×10^{-4}	
Propazine	5.56×10^{-3}	1.82×10^{-3}	
Pyrethrin I and Pyrethrin II	8.91×10^{-3}	2.40×10^{-3}	
Simazine	5.89×10^{-3}	1.91×10^{-3}	
Stirofos	2.95×10^{-3}	9.72×10^{-4}	
TCMTB	2.80×10^{-9}	7.54×10^{-4}	
Tebuthiuron	9.78×10^{-2}	3.41×10^{-2}	
Terbacil	2.76×10^{-1}	8.36×10^{-2}	
Terbufos	4.92×10^{-4}	1.26×10^{-4}	
Terbuthylazine	5.56×10^{-3}	1.82×10^{-3}	
Terbutryn	5.56×10^{-3}	1.82×10^{-3}	
Toxaphene	7.35×10^{-3}	2.67×10^{-3}	
Triadimefon	4.69×10^{-2}	2.46×10^{-2}	
Trifluralin	3.22×10^{-4}	1.09×10^{-4}	1
Vapam [Sodium methyldithiocarbamate]	4.14×10^{-3}	1.35×10^{-3}	
Ziram [Zinc dimethyldithiocarbanate]	4.14×10^{-3}	1.35×10^{-3}	

[1] No discharge of process wastewater pollutants.

Notes:
1 Monitor and report as total Trifluralin.
2 Pounds of product shall include Benomyl and any Carbendazim production not converted to Benomyl.
3 Monitor and report as total tin.
4 Applies to purification by recrystalization portion of the process.

[58 FR 50696, Sept. 28, 1993, as amended at 63 FR 39443, July 22, 1998]

Table 4 to Part 455—BAT and NSPS Effluent Limitations for Priority Pollutants for Direct Discharge Point Sources That use End-of-Pipe Biological Treatment

[Micrograms per liter (μg/l)]

Pollutant	Daily maximum shall not exceed	Monthly average shall not exceed
1,1-Dichloroethylene	25	16
1,1,1-Trichloroethane	54	21
1,2-Dichloroethane	211	68
1,2-Dichloropropane	230	153
1,2-Dichlorobenzene	163	77
1,2-trans-Dichloroethylene	54	21
1,3-Dichloropropene	44	29
1,4-Dichlorobenzene	28	15
2-chlorophenol	98	31
2,4-Dichlorophenol	112	39

[Micrograms per liter (μg/l)]

Pollutant	Daily maximum shall not exceed	Monthly average shall not exceed
2,4-Dimethylphenol	36	18
Benzene	136	37
Bromodichloromethane	380	142
Bromomethane	380	142
Chlorobenzene	28	15
Chloromethane	190	86
Cyanide (Total)	640	220
Dibromochloromethane	794	196
Dichloromethane	89	40
Ethylbenzene	108	32
Lead (Total)	690	320
Naphthalene	59	22
Phenol	26	15
Tetrachloroethylene	56	22
Tetrachloromethane	38	18
Toluene	80	26
Tribromomethane	794	196
Trichloromethane	46	21

[58 FR 50698, Sept. 28, 1993]

Table 5 to Part 455—BAT and NSPS Effluent Limitations for Priority Pollutants for Direct Discharge Point Sources That Do Not Use End-of-Pipe Biological Treatment

[Micrograms per liter (μg/l)]

Pollutant	Daily maximum shall not exceed	Monthly average shall not exceed
1,1-Dichloroethylene	60	22
1,1,1-Trichloroethane	59	22
1,2-trans-Dichloroethylene	66	25
1,2-Dichlorobenzene	794	196
1,2-Dichloropropane	794	196
1,2-Dichloroethane	574	180
1,3-Dichloropropene	794	196
1,4-Dichlorobenzene	380	142
2,4-Dimethylphenol	47	19
Benzene	134	57
Bromodichlorometh ane	380	142
Bromomethane	380	142
Chlorobenzene	380	142
Chloromethane	295	110
Cyanide (Total)	640	220
Dibromochlorometh ane	794	196

[Micrograms per liter (μg/l)]

Pollutant	Daily maximum shall not exceed	Monthly average shall not exceed
Dichloromethane	170	36
Ethylbenzene	380	142
Lead (Total)	690	320
Naphthalene	47	19
Phenol	47	19
Tetrachloroethylene	164	52
Tetrachloromethane	380	142
Toluene	74	28
Tribromomethane	794	196
Trichloromethane	325	111

[58 FR 50698, Sept. 28, 1993]

Table 6 to Part 455—PSES and PSNS for Priority Pollutants

[Micrograms per liter (μ g/l)]

Pollutant	Daily maximum shall not exceed	Monthly maximum shall not exceed
1,1-Dichloroethylene	60	22
1,1,1-Trichloroethane	59	22
1,2-trans-Dichloroethylene	66	25
1,2-Dichlorobenzene	794	196
1,2-Dichloropropane	794	196
1,2-Dichloroethane	574	180
1,3-Dichloropropene	794	196
1,4-Dichlorobenzene	380	142
Benzene	134	57
Bromodichlorometh ane	380	142
Bromomethane	380	142
Chlorobenzene	380	142
Chloromethane	295	110
Cyanide (Total)	640	220
Dibromochlorometh ane	794	196
Dichloromethane	170	36
Ethylbenzene	380	142
Lead (Total)	690	320
Naphthalene	47	19
Tetrachloroethylene	164	52
Tetrachloromethane	380	142
Toluene	74	28
Tribromomethane	794	196
Trichloromethane	325	111

[58 FR 50699, Sept. 28, 1993]

Table 7 to Part 455—Test Methods for Pesticide Active Ingredients

EPA survey code	Pesticide name	CAS No.	EPA analytical method No.(s)
8	Triadimefon	43121–43–3	507/633/525.1/1656
12	Dichlorvos	00062–73–7	1657/507/622/525.1
16	2,4-D; 2,4-D Salts and Esters [2,4-Dichlorophenoxyacetic acid].	00094–75–7	1658/515.1/615/515.2/555
17	2,4-DB; 2,4-DB Salts and Esters [2,4-Dichlorophenoxybutyric acid].	00094–82–6	1658/515.1/615/515.2/555
22	Mevinphos	07786–34–7	1657/507/622/525.1
25	Cyanazine	21725–46–2	629/507
26	Propachlor	01918–16–7	1656/508/608.1/525.1
27	MCPA; MCPA Salts and Esters [2-Methyl-4-chlorophenoxyacetic acid].	00094–74–6	1658/615/555
30	Dichlorprop; Dichlorprop Salts and Esters [2-(2,4-Dichlorophenoxy) propionic acid].	00120–36–5	1658/515.1/615/515.2/555

EPA survey code	Pesticide name	CAS No.	EPA analytical method No.(s)
31	MCPP; MCPP Salts and Esters [2-(2-Methyl-4-chlorophenoxy) propionic acid].	00093–65–2	1658/615/555
35	TCMTB [2-(Thiocyanomethylthio) benzothiazole]	21564–17–0	637
39	Pronamide	23950–58–5	525.1/507/633.1
41	Propanil	00709–98–8	632.1/1656
45	Metribuzin	21087–64–9	507/633/525.1/1656
52	Acephate	30560–19–1	1656/1657
53	Acifluorfen	50594–66–6	515.1/515.2/555
54	Alachlor	15972–60–8	505/507/645/525.1/1656
55	Aldicarb	00116–06–3	531.1
58	Ametryn	00834–12–8	507/619/525.1
60	Atrazine	01912–24–9	505/507/619/525.1/1656
62	Benomyl	17804–35–2	631
68	Bromacil; Bromacil Salts and Esters	00314–40–9	507/633/525.1/1656
69	Bromoxynil	01689–84–5	1625/1661
69	Bromoxynil octanoate	01689–99–2	1656
70	Butachlor	23184–66–9	507/645/525.1/1656
73	Captafol	02425–06–1	1656
75	Carbaryl [Sevin]	00063–25–2	531.1/632/553
76	Carbofuran	01563–66–2	531.1/632
80	Chloroneb	02675–77–6	1656/508/608.1/525.1
82	Chlorothalonil	01897–45–6	508/608.2/525.1/1656
84	Stirofos	00961–11–5	1657/507/622/525.1
86	Chlorpyrifos	02921–88–2	1657/508/622
90	Fenvalerate	51630–58–1	1660
103	Diazinon	00333–41–5	1657/507/614/622/525.1
107	Parathion methyl	00298–00–0	1657/614/622
110	DCPA [Dimethyl 2,3,5,6-tetrachloroterephthalate]	01861–32–1	508/608.2/525.1/515.1/515.2/1656
112	Dinoseb	00088–85–7	1658/515.1/615/515.2/555
113	Dioxathion	00078–34–2	1657/614.1
118	Nabonate [Disodium cyanodithioimidocarbonate]	00138–93–2	630.1
119	Diuron	00330–54–1	632/553
123	Endothall	00145–73–3	548/548.1
124	Endrin	00072–20–8	1656/505/508/608/617/525.1
125	Ethalfluralin	55283–68–6	[1] 1656/[1] 627
126	Ethion	00563–12–2	1657/614/614.1
127	Ethoprop	13194–48–4	1657/507/622/525.1
132	Fenarimol	60168–88–9	507/633.1/525.1/1656
133	Fenthion	00055–38–9	1657/622
138	Glyphosate [N-(Phosphonomethyl) glycine]	01071–83–6	547
140	Heptachlor	00076–44–8	1656/505/508/608/617/525.1
144	Isopropalin	33820–53–0	1656/627
148	Linuron	00330–55–2	553/632
150	Malathion	00121–75–5	1657/614
154	Methamidophos	10265–92–6	1657
156	Methomyl	16752–77–5	531.1/632
158	Methoxychlor	00072–43–5	1656/505/508/608.2/617/525.1
172	Nabam	00142–59–6	630/630.1
173	Naled	00300–76–5	1657/622
175	Norflurazon	27314–13–2	507/645/525.1/1656
178	Benfluralin	01861–40–1	[1] 1656/[1] 627
182	Fensulfothion	00115–90–2	1657/622
183	Disulfoton	00298–04–4	1657/507/614/622/525.1
185	Phosmet	00732–11–6	1657/622.1
186	Azinphos Methyl	00086–50–0	1657/614/622
192	Organo-tin pesticides	12379–54–3	Ind-01/200.7/200.9
197	Bolstar	35400–43–2	1657/622
203	Parathion	00056–38–2	1657/614
204	Pendimethalin	40487–42–1	1656
205	Pentachloronitrobenzene	00082–68–8	1656/608.1/617
206	Pentachlorophenol	00087–86–5	625/1625/515.2/555/515.1/ 525.1
208	Permethrin	52645–53–1	608.2/508/525.1/1656/1660
212	Phorate	00298–02–2	1657/622
218	Busan 85 [Potassium dimethyldithiocarbamate]	00128–03–0	630/630.1
219	Busan 40 [Potassium N-hydroxymethyl-N-methyldithiocarbamate].	51026–28–9	630/630.1
220	KN Methyl [Potassium N-methyldithiocarbamate]	00137–41–7	630/630.1
223	Prometon	01610–18–0	507/619/525.1
224	Prometryn	07287–19–6	507/619/525.1
226	Propazine	00139–40–2	507/619/525.1/1656
230	Pyrethrin I	00121–21–1	1660
232	Pyrethrin II	00121–29–9	1660
236	DEF [S,S,S-Tributyl phosphorotrithioate]	00078–48–8	1657

EPA survey code	Pesticide name	CAS No.	EPA analytical method No.(s)
239	Simazine	00122–34–9	505/507/619/525.1/1656
241	Carbam-S [Sodium dimethyldithiocarbanate]	00128–04–1	630/630.1
243	Vapam [Sodium methyldithiocarbamate]	00137–42–8	630/630.1
252	Tebuthiuron	34014–18–1	507/525.1
254	Terbacil	05902–51–2	507/633/525.1/1656
255	Terbufos	13071–79–9	1657/507/614.1/525.1
256	Terbuthylazine	05915–41–3	619/1656
257	Terbutryn	00886–50–0	507/619/525.1
259	Dazomet	00533–74–4	630/630.1/1659
262	Toxaphene	08001–35–2	1656/505/508/608/617/525.1
263	Merphos [Tributyl phosphorotrithioate]	00150–50–5	1657/507/525.1/622
264	Trifluralin	01582–09–8	1656/508/617/627/525.1
268	Ziram [Zinc dimethyldithiocarbamate]	00137–30–4	630/630.1

[1] Monitor and report as total Trifluralin.

[58 FR 50699, Sept. 28, 1993]

TABLE 8 TO PART 455—LIST OF POLLUTION PREVENTION ALTERNATIVE PRACTICES

A modification to the list of practices on this table that an individual facility must comply with to be eligible for the pollution prevention alternative is allowed with acceptable justification as listed on this table as approved by the permit writer or control authority (using BPJ/BEJ) after submittal by the facility of a request for modification. A modification, for purposes of this table, means that a facility would no longer have to perform a listed practice or would need to comply with a modified practice. However, the modification only applies to the specific practice for which the modification has been justified and to no other listed practices. Facilities are required to thoroughly discuss all modifications in the on-site compliance paperwork as described above in the limitations and standards (§ 455.41(c)).

1. Must use water conservation practices. These practices may include, but are not limited to using: spray nozzles or flow reduction devices on hoses, low volume/high pressure rinsing equipment, floor scrubbing machines, mop(s) and bucket(s), and counter current staged drum rinsing stations.

[Modification allowed when: Rinsing narrow transfer lines or piping where sufficient rinsing is better achieved by flushing with water.]

2. Must practice good housekeeping:

(a) Perform preventative maintenance on all valves and fittings and repair leaky valves and fittings in a timely manner;

(b) Use drip pans under any valves or fittings where hoses or lines are routinely connected and disconnected, collect for reuse when possible; and

(c) Perform quick cleanup of leaks and spills in outdoor bulk storage or process areas.

3. Must sweep or vacuum dry production areas prior to rinsing with water.

4. Must clean interiors of dry formulation equipment with dry carrier prior to any water rinse. The carrier material must be stored and reused in future formulation of the same or compatible product or properly disposed of as solid waste.

5. If operating continuous overflow Department of Transportation (DOT) aerosol leak test baths—>

Must operate with some recirculation.

6. If operating air pollution control wet scrubbers—>

Must operate as recirculating scrubbers (periodic blowdown is allowed as needed).

[Modification allowed when: Facility demonstrates that they would not be able to meet Resource Conservation Recovery Act or Clean Air Act (CAA) requirements.]

7. When performing rinsing of raw material drums, storage drums, and/or shipping containers that contained liquid PAI(s) and/or inert ingredients for the formulation of water-based products—>

Must reuse the drum/shipping container rinsate DIRECTLY into the formulation at the time of formulation; or store for use in future formulation of same or compatible product; or use a staged drum rinsing station (counter current rinsing).

[Modification allowed when: the drum/shipping container holds inert ingredient(s) only and (1) the facility can demonstrate that, after using water conservation practices, the large concentration of inert ingredient in the formulation creates more volume than could feasibly be reused; or (2) the facility can demonstrate that the concentration of the inert in the formulation is so small that the reuse would cause a formulation to exceed the ranges allowed in the Confidential Statement of Formula (CSF) (40 CFR 158.155).]

8. When performing rinsing of raw material drums, storage drums, and/or shipping containers that contained liquid PAI(s) and/or inert ingredients for the formulation of solvent-based products—>

Must reuse the drum/shipping container rinsate DIRECTLY into the formulation at the time of formulation or store for use in future formulation of same or compatible product.

[Modification allowed when:

(a) The drum/shipping container holds inert ingredient(s) only and: (1) The facility can demonstrate that, after using water conservation practices, the large concentration of inert ingredient in the formulation creates more volume than could feasibly be reused; or (2) the facility can demonstrate that the concentration of the inert in the formulation is so small that the reuse would cause a formulation to exceed the ranges allowed in the Confidential Statement of Formula (CSF) (40 CFR 158.155); *or*

(b) Drums/shipping containers are going to a drum refurbisher/recycler who will only accept drums rinsed with water.]

9. Must dedicate PFPR production equipment by water-based versus solvent-based products. Dedicated solvent-based or water-based equipment may be used on a non-routine basis for non-dedicated operations; however the facility may not discharge the solvent/aqueous changeover rinsate as part of their P2 allowable discharge (i.e., the facility must achieve zero discharge of those process wastewater pollutants).

[Modification allowed when: Facility has installed and is using a solvent recovery system for the changeover rinsate (can also be used for other solvent recovery).]

10. Must store the rinsate from interior rinsing (does not include drum/shipping container rinsate) for reuse in future formulation of same or compatible product.

[Modification allowed when:

(a) Facility has evidence of biological growth or other product deterioration over a typical storage period;

(b) Facility has space limitations, BUT must still store rinsates for most frequently produced products;

(c) Manufacturer (or formulator contracting for toll formulating) has directed otherwise (i.e., send back to them or send for off-site disposal);

(d) Facility is dropping registration or production of the formulation and there is no compatible formulation for reuse of the rinsates or facility can provide reasonable explanation of why it does not anticipate formulation of same or compatible formulation within the next 12 months;

(e) Facility only performs packaging of the pesticide product from which interior rinsate is generated; or

(f) Facility has demonstrated that it must use a detergent to clean the equipment.]

NOTES

For indirect dischargers: After following the practices above, some wastewaters may require pretreatment prior to discharge to POTWs. See definition of pollution prevention allowable discharge for indirect dischargers (§ 455.41(d)).

For direct dischargers: After following the practices above, all wastewaters require treatment prior to discharge directly to the nation's waters. See definition of pollution prevention allowable discharge for direct dischargers (§ 455.41(e)).

Additional information and guidance on implementing these P2 practices as well as evaluating compliance with these practices will be available in a P2 Guidance Manual for the PFPR Industry.

[61 FR 57553, Nov. 6, 1996]

TABLE 9 TO PART 455—GROUP 2 MIXTURES

Shaughnessey code	Chemical name[1]
002201	Sabadilla alkaloids.
006501	Aromatic petroleum derivative solvent.
006602	Heavy aromatic naphtha.
016601[2]	Dry ice.
022003	Coal tar.
025001	Coal tar neutral oils.
025003	Creosote oil (Note: Derived from any source).
025004	Coal tar creosote.
031801	Ammonium salts of C8–18 and C18' fatty acids.
055601	BNOA.
063501	Kerosene.
063502	Mineral oil—includes paraffin oil from 063503.
063503	Petroleum distillate, oils, solvent, or hydrocarbons; also p.
063506	Mineral spirits.
067003	Terpineols (unspec.).
067205	Pine tar oil.
067207	Ester gum.
067302	Amines, N-coco alkyltrimethylenedi-, acetates.
069152	Amines, coco alkyl, hydrochlorides.
070801	Red Squill glycoside.
071004	Cube Resins other than rotenone.
071501	Ryania speciosa, powdered stems of.
072602[2]	Silica gel.
072605[2]	Silicon dioxide.
079014	Turkey red oil.
079021	Potassium salts of fatty acids.
079029	Fatty alcohols (52–61% C10, 39–46% C8, 0–3% C6, 0–3% C12).
079034	Methyl esters of fatty acids (100% C8–C12)
079059	Fatty alcohols (54.5% C10, 45.1% C8, 0.4% C6)
086803	Xylene range aromatic solvent
107302	Polyhedral inclusion bodies of Douglas fir tussock moth nucl.
107303	Polyhedral inclusion bodies of gypsy moth nucleopolyhedrosis.
107304	Polyhedral inclusion bodies of n. sertifer
116902	Gibberellin A4 mixt. with Gibberellin A7.
117001	Nosema locustae.
128888	Lactofen (ANSI).
128934[2]	Nitrogen, liquid.
129029	Bergamot Oil.
224600	Diethanolamides of the fatty acids of coconut oil (coded 079).

Shaughnessey code	Chemical name[1]
505200	Isoparaffinic hydrocarbons.

[1] Shaughnessey codes and chemical names are taken directly from the FATES database. Several chemical names are truncated because the chemical names listed in the FATES database are limited to 60 characters.

[2] EPA does not believe this PAI will persist in sanitary streams long enough to reach a POTW.

[61 FR 57554, Nov. 6, 1996]

TABLE 10 TO PART 455—LIST OF APPROPRIATE POLLUTION CONTROL TECHNOLOGIES

This table contains those pollutant control technologies, such as hydrolysis, chemical oxidation, precipitation and activated carbon adsorption, which have been used for estimating compliance costs on a PAI specific basis. In general, these treatment technologies have been determined to be effective in treating pesticide containing wastewaters in literature, in bench or pilot scale treatability studies or in the Pesticide Manufacturing effluent guidelines. These are the same technologies that are presented as part of the Universal Treatment System. However, these technologies are PAI specific and may need to be used in conjunction with one another to provide treatment for all PAIs used at a facility over a period of time. In addition, facilities may experience difficulties treating wastewaters that contain emulsions, therefore, ''appropriate'' treatment for emulsified wastewaters must include an emulsion breaking step. For PAIs whose technology is listed as ''Pollution Prevention'', the permitting authority/control authority can determine if additional treatment is necessary through best professional judgement/best engineering judgement, respectively.

LIST OF APPROPRIATE POLLUTION CONTROL TECHNOLOGIES[1]

PAI name[2]	PAI code[3]	Shaughnessy code[4]	Structural group[5]	Treatment technology
Dicofol	001	10501	DDT	Hydrolysis.
Maleic Hydrazide	002	51501	Hydrazide	Activated Carbon.
EDB	003	42002	EDB	Activated Carbon.
Vancide TH	004	82901	s-Triazine	Activated Carbon.
1,3-Dichloropropene	005	29001	EDB	Hydrolysis.
Thenarsazine Oxide	006	12601	Organoarsenic	Precipitation.
Dowicil 75	007	17901	NR4	Activated Carbon.
Triadimefon	008	109901	s-Triazine	Activated Carbon.
Hexachlorophene	009	44901	Chlorophene	Activated Carbon.
Tetrachlorophene	010		Chlorophene	Activated Carbon.
Dichlorophene	011	55001	Chlorophene	Activated Carbon.
Dichlorvos	012	84001	Phosphate	Hydrolysis.
Landrin-2	013		Carbamate	Activated Carbon.
2,3,6-T, S&E or Fenac	014	82605	2,4-D	Activated Carbon.
2,4,5-T and 2,4,5-T, S&E	015	(*)	2,4-D	Activated Carbon.
2,4-D (2,4-D, S&E)	016	(*)	2,4-D	Chemical Oxidation.
2,4-DB, S&E	017	(*)	2,4-D	Activated Carbon.
Dyrene or Anilazine	018	80811	s-Triazine	Activated Carbon.
Dinocap	019	36001	Phenylcrotonate	Activated Carbon.
Dichloran or DCNA	020	31301	Aryl Halide	Activated Carbon.
Busan 90	021	8707	Miscellaneous Organic	Activated Carbon.
Mevinphos	022	15801	Phosphate	Hydrolysis.
Sulfallate	023		Dithiocarbamate	Activated Carbon.
Chlorfenvinphos	024	84101	Phosphate	Activated Carbon.
Cyanazine or Bladex	025	100101	s-Triazine	Activated Carbon.
Propachlor	026	19101	Acetanilide	Activated Carbon.
MCPA, S&E	027	(*)	2,4-D	Activated Carbon.
Octhilinone	028	99901	Heterocyclic	Activated Carbon.
Pindone	029	67703	Miscellaneous Organic	Activated Carbon.
Dichlorprop, S&E	030	(*)	2,4-D	Activated Carbon.
MCPP, S&E or Mecoprop	031	(*)	2,4-D	Activated Carbon.
Thiabendazole	032	60101	Heterocyclic	Activated Carbon.
Belclene 310	033	80815	s-Triazine	Activated Carbon.
Chlorprop, S&E	034	21202	2,4-D	Activated Carbon.
Busan 72 or TCMTB	035	35603	Heterocyclic	Hydrolysis.
Chlorophacinone	037	67707	Miscellaneous Organic	Activated Carbon.
Landrin-1	038		Carbamate	Activated Carbon.
Pronamide	039	101701	Chlorobenzamide	Activated Carbon.
Methiocarb or Mesurol	040	100501	Carbamate	Hydrolysis.
Propanil	041	28201	Chloropropionanilide	Activated Carbon.
Polyphase[6]	042	107801	Carbamate	Activated Carbon.
Coumafuryl or Fumarin	043	86001	Coumarin	Activated Carbon.
DNOC	044		Phenol	Activated Carbon.
Metribuzin	045	101101	Triazathione	Activated Carbon.
CPA, S&E	046	(*)	2,4-D	Activated Carbon.

LIST OF APPROPRIATE POLLUTION CONTROL TECHNOLOGIES [1]—Continued

PAI name [2]	PAI code [3]	Shaughnessy code [4]	Structural group [5]	Treatment technology
MCPB, S&E	047	19202	2,4-D	Activated Carbon.
Aminocarb	048		Carbamate	Hydrolysis.
Etridiazole	049	84701	Heterocyclic	Activated Carbon.
Ethoxyquin	050	55501	Quinolin	Activated Carbon.
Acephate or Orthene	052	103301	Phosphoroamidothioate	Activated Carbon.
Acifluorfen	053	114402	Benzoic Acid	Activated Carbon.
Alachlor	054	90501	Acetanilide	Activated Carbon.
Aldicarb	055	98301	Carbamate	Hydrolysis.
Allethrin	057	(*)	Pyrethrin	Activated Carbon.
Ametryn	058	80801	s-Triazine	Activated Carbon.
Amitraz	059	106201	Iminamide	Activated Carbon.
Atrazine	060	80803	s-Triazine	Hydrolysis.
Bendiocarb	061	105201	Carbamate	Hydrolysis.
Benomyl	062	99101	Carbamate	Hydrolysis.
BHC	063		Lindane	Hydrolysis.
Benzyl Benzoate	064	9501	Ester	Activated Carbon.
Lethane 60	065		Thiocyanate	Activated Carbon.
Bifenox	066	104301	Nitrobenzoate	Activated Carbon.
Biphenyl	067	17002	Aryl	Activated Carbon.
Bromacil (Lithium Salt)	068	(*)	Uracil	Activated Carbon.
Bromoxynil	069	(*)	Benzonitrile	Activated Carbon.
Butachlor	070		Acetanilide	Activated Carbon.
Giv-gard	071	101401	Miscellaneous Organic	Activated Carbon.
Cacodylic Acid	072	(*)	Organoarsenic	Precipitation.
Captafol	073		Phthalimide	Hydrolysis.
Captan	074	81301	Phthalimide	Hydrolysis.
Carbaryl	075	56801	Carbamate	Hydrolysis.
Carbofuran	076	90601	Carbamate	Hydrolysis.
Carbosulfan	077		Carbamate	Activated Carbon.
Chloramben	078	(*)	Benzoic Acid	Activated Carbon.
Chlordane	079	58201	Tricyclic	Activated Carbon.
Chloroneb	080	27301	Aryl Halide	Chemical Oxidation.
Chloropicrin	081	81501	Alkyl Halide	Chemical Oxidation.
Chlorothalonil	082	81901	Chloropropionanilide	Activated Carbon.
Chloroxuron	083		Urea	Activated Carbon.
Stirofos	084	83701	Phosphate	Hydrolysis.
Chlorpyrifos Methyl	085	59102	Phosphorothioate	Hydrolysis.
Chlorpyrifos	086	59101	Phosphorothioate	Chemical Oxidation.
Mancozeb	087	14504	Dithiocarbamate	Activated Carbon.
Bioquin (Copper)	088	24002	Organocopper	Precipitation.
Copper EDTA	089	39105	Organocopper	Precipitation.
Pydrin or Fenvalerate	090	109301	Pyrethrin	Activated Carbon.
Cycloheximide	091		Cyclic Ketone	Activated Carbon.
Dalapon	092	(*)	Alkyl Halide	Activated Carbon.
Dienochlor	093	27501	HCp	Activated Carbon.
Demeton	094		Phosphorothioate	Hydrolysis.
Desmedipham	095	104801	Carbamate	Hydrolysis.
Amobam	096		Miscellaneous Organic	Activated Carbon.
DBCP	097		EDB	Activated Carbon.
Dicamba	098	(*)	Aryl Halide	Activated Carbon.
Dichlone	099	29601	Quinone	Activated Carbon.
Thiophanate Ethyl	100	103401	Carbamate	Hydrolysis.
Perthane	101		DDT	Activated Carbon.
EXD	102		Dithiocarbamate	Activated Carbon.
Diazinon	103	57801	Phosphorothioate	Hydrolysis.
Diflubenzuron	104	108201	Urea	Activated Carbon.
Dimethoate	106	35001	Phosphorodithioate	Hydrolysis.
Parathion Methyl	107	53501	Phosphorothioate	Hydrolysis.
Dicrotophos	108	35201	Phosphate	Activated Carbon.
Crotoxyphos	109	58801	Phosphate	Activated Carbon.
DCPA	110	78701	Aryl Halide	Activated Carbon.
Trichlorofon	111	57901	Phosphonate	Activated Carbon.
Dinoseb	112	37505	Phenol	Activated Carbon.
Dioxathion	113	37801	Phosphorodithioate	Hydrolysis.
Diphacinone	114	67701	Indandione	Activated Carbon.
Diphenamide	115	36601	Acetamide	Activated Carbon.
Diphenylamine	116	38501	Aryl Amine	Activated Carbon.
MGK 326	117	47201	Ester	Activated Carbon.
Nabonate	118	63301	Isocyanate	Chemical Oxidation.
Diuron	119	35505	Urea	Activated Carbon.
Metasol DGH	120	44303	NR4	Activated Carbon.

LIST OF APPROPRIATE POLLUTION CONTROL TECHNOLOGIES [1]—Continued

PAI name [2]	PAI code [3]	Shaughnessy code [4]	Structural group [5]	Treatment technology
Dodine	121	44301	NR4	Activated Carbon.
Endosulfan	122	79401	Tricyclic	Activated Carbon.
Endothall (Endothall S&E)	123	(*)	Bicyclic	Activated Carbon.
Endrin	124	41601	Tricyclic	Activated Carbon.
Ethalfluralin	125	113101	Toluidine	Activated Carbon.
Ethion	126	58401	Phosphorodithioate	Hydrolysis.
Ethoprop	127	41101	Phosphorodithioate	Activated Carbon.
Fenamiphos	128	100601	Phosphoroamidate	Activated Carbon.
Chlorobenzilate	129	28801	Aryl Halide	Activated Carbon.
Butylate	130	41405	Thiocarbamate	Activated Carbon.
Famphur	131		Phosphorothioate	Hydrolysis.
Fenarimol	132	206600	Pyrimidine	Activated Carbon.
Fenthion or Baytex	133	53301	Phosphorothioate	Hydrolysis.
Ferbam	134	34801	Dithiocarbamate	Activated Carbon.
Fluometuron	135	35503	Urea	Activated Carbon.
Fluoroacetamide	136		Acetamide	Activated Carbon.
Folpet	137	81601	Phthalimide	Hydrolysis.
Glyphosate (Glyphosate S&E)	138	(*)	Phosphoroamidate	Chemical Oxidation.
Glyphosine	139		Phosphoroamidate	Activated Carbon.
Heptachlor	140	44801	Tricyclic	Activated Carbon.
Cycloprate	141		Thiocarbamate	Activated Carbon.
Hexazinone	142	107201	s-Triazine	Activated Carbon.
Isofenphos	143	109401	Phosphoroamidothioate	Activated Carbon.
Isopropalin	144	100201	Toluidine	Activated Carbon.
Propham	145		Carbamate	Hydrolysis.
Karabutilate	146	97401	Carbamate	Hydrolysis.
Lindane	147	9001	Lindane	Activated Carbon.
Linuron	148	35506	Urea	Chemical Oxidation.
Malachite Green	149	39504	NR4	Activated Carbon.
Malathion	150	57701	Phosphorodithioate	Hydrolysis.
Maneb	151	14505	Dithiocarbamate	Activated Carbon.
Manam	152		Dithiocarbamate	Activated Carbon.
Mefluidide	153	114002	Carbamate	Activated Carbon.
Methamidophos	154	101201	Phosphoroamidothioate	Activated Carbon.
Methidathion	155	100301	Phosphorodithioate	Activated Carbon.
Methomyl	156	90301	Carbamate	Hydrolysis.
Methoprene	157	(*)	Ester	Activated Carbon.
Methoxychlor	158	34001	DDT	Hydrolysis.
Methyl Bromide	160	53201	Alkyl Halide	Activated Carbon.
Monosodium Methyl Arsenate	161	(*)	Organoarsenic	Precipitation.
Nalco D-2303	163	68102	Thiocyanate	Activated Carbon.
Quinomethionate	164	54101	Miscellaneous Organic	Activated Carbon.
Metolachlor	165	108801	Acetanilide	Activated Carbon.
Mexacarbate	166		Carbamate	Hydrolysis.
Metiram	167	14601	Dithiocarbamate	Activated Carbon.
Monuron TCA	168	35502	Urea	Activated Carbon.
Monuron	169	35501	Urea	Activated Carbon.
Napropamide	170	103001	Carbamate	Activated Carbon.
Deet	171	80301	Toluamide	Activated Carbon.
Nabam	172	14503	Dithiocarbamate	Chemical Oxidation.
Naled	173	34401	Phosphate	Hydrolysis.
Norea	174		Urea	Activated Carbon.
Norflurazon	175	105801	Heterocyclic	Activated Carbon.
Naptalam or Neptalam	176	30703	Phthalamide	Activated Carbon.
MGK 264	177	57001	Bicyclic	Activated Carbon.
Benfluralin	178	84301	Toluidine	Activated Carbon.
Sulfotepp	179	79501	Phosphorothioate	Activated Carbon.
Aspon	180		Phosphorothioate	Activated Carbon.
Coumaphos	181	36501	Phosphorothioate	Hydrolysis.
Fensulfothion	182	32701	Phosphorothioate	Hydrolysis.
Disulfoton	183	32501	Phosphorodithioate	Hydrolysis.
Fenitrothion	184	105901	Phosphorothioate	Hydrolysis.
Phosmet	185	59201	Phosphorodithioate	Hydrolysis.
Azinphos Methyl (Guthion)	186	58001	Phosphorodithioate	Hydrolysis.
Oxydemeton Methyl	187	58702	Phosphorothioate	Activated Carbon.
Organo-Arsenic Pesticides	188		Organoarsenic	Precipitation.
Organo-Cadmium Pesticides	189		Organocadmium	Precipitation
Organo-Copper Pesticides	190	(*)	Organocopper	Precipitation.
Organo-Mercury Pesticides	191	(*)	Organomercury	Precipitation.
Organo-Tin Pesticides	192	(*)	Organotin	Precipitation.
o-Dichlorobenzene	193	59401	Aryl Halide	Activated Carbon.

LIST OF APPROPRIATE POLLUTION CONTROL TECHNOLOGIES [1]—Continued

PAI name [2]	PAI code [3]	Shaughnessy code [4]	Structural group [5]	Treatment technology
Oryzalin	194	104201	Sulfanilamide	Activated Carbon.
Oxamyl	195	103801	Carbamate	Hydrolysis.
Oxyfluorfen	196	111601	Miscellaneous Organic	Activated Carbon.
Bolstar	197	111501	Phosphorodithioate	Activated Carbon.
Sulprofos Oxon	198		Phosphorothioate	Hydrolysis.
Santox (EPN)	199	41801	Phosphorodithioate	Hydrolysis.
Fonofos	200	41701	Phosphorodithioate	Hydrolysis.
Propoxur	201	47802	Carbamate	Hydrolysis.
p-Dichlorobenzene	202	61501	Aryl Halide	Activated Carbon.
Parathion Ethyl	203	57501	Phosphorothioate	Hydrolysis.
Pendimethalin	204	108501	Benzeneamine	Activated Carbon.
PCNB	205	56502	Aryl Halide	Activated Carbon.
PCP or Penta	206	(*)	Phenol	Activated Carbon.
Perfluidone	207		Sulfonamide	Activated Carbon.
Permethrin	208	109701	Pyrethrin	Activated Carbon.
Phenmedipham	209	98701	Carbamate	Hydrolysis.
Nemazine	210	64501	Heterocyclic	Activated Carbon.
Phorate	212	57201	Phosphorodithioate	Hydrolysis.
Phosalone	213	97701	Phosphorodithioate	Hydrolysis.
Phosphamidon	214	18201	Phosphate	Hydrolysis.
Picloram	215	(*)	Pyridine	Activated Carbon.
Piperonyl Butoxide	216	67501	Ester	Activated Carbon.
PBED or WSCP (Busan 77)	217	69183	NR4	Activated Carbon.
Busan 85 or Arylane	218	34803	Dithiocarbamate	Chemical Oxidation.
Busan 40	219	102901	Dithiocarbamate	Chemical Oxidation.
KN Methyl	220	39002	Dithiocarbamate	Chemical Oxidation.
Metasol J26	221	101301	Miscellaneous Organic	Activated Carbon.
Profenofos	222	111401	Phosphorothioate	Activated Carbon.
Prometon or Caparol	223	80804	s-Triazine	Chemical Oxidation.
Prometryn	224	80805	s-Triazine	Activated Carbon.
Propargite	225	97601	Miscellaneous Organic	Activated Carbon.
Propazine	226	80808	s-Triazine	Activated Carbon.
Propionic Acid	227	77702	Alkyl Acid	Activated Carbon.
Previcur N	228	119301	Carbamate	Hydrolysis.
Pyrethrin Coils	229	69004	Pyrethrin	Activated Carbon.
Pyrethrum I	230	69001	Pyrethrin	Hydrolysis.
Pyrethrum II	231	69002	Pyrethrin	Hydrolysis.
Pyrethrins	232	(*)	Pyrethrin	Hydrolysis.
Resmethrin	233	(*)	Pyrethrin	Activated Carbon.
Fenchlorphos or Ronnel	234	58301	Phosphorothioate	Hydrolysis.
Mexide or Rotenone	235	71003	Miscellaneous Organic	Activated Carbon.
DEF	236	74801	Phosphorotrithioate	Activated Carbon.
Siduron or Tupersan	237	35509	Urea	Activated Carbon.
Silvex	238	(*)	2,4-D	Activated Carbon.
Simazine	239	80807	s-Triazine	Activated Carbon.
Sodium Bentazon	240	103901	Heterocyclic	Chemical Oxidation.
Carbam-S or Sodam	241	34804	Dithiocarbamate	Chemical Oxidation.
Sodium Fluoroacetate	242	75003	Acetamide	Activated Carbon.
Vapam or Metham Sodium	243	39003	Dithiocarbamate	Chemical Oxidation.
Sulfoxide	244	57101	Miscellaneous Organic	Activated Carbon.
Cycloate or Ro-Neet	245	41301	Thiocarbamate	Activated Carbon.
EPrecipitationC or Eptam	246	41401	Thiocarbamate	Activated Carbon.
Molinate	247	41402	Thiocarbamate	Activated Carbon.
Pebulate or Tillman	248	41403	Thiocarbamate	Activated Carbon.
Vernolate or Vernam	249	41404	Thiocarbamate	Activated Carbon.
HPrecipitationMS	250	35604	Thiosulphonate	Activated Carbon.
Bensulide or Betesan	251	9801	Phosphorodithioate	Activated Carbon.
Tebuthiuron	252	105501	Urea	Activated Carbon.
Temephos	253	59001	Phosphorothioate	Hydrolysis.
Terbacil	254	12701	Uracil	Activated Carbon.
Terbufos or Counter	255	105001	Phosphorodithioate	Activated Carbon.
Terbuthylazine	256	80814	s-Triazine	Activated Carbon.
Terbutryn	257	80813	s-Triazine	Activated Carbon.
Tetrachlorophenol	258	63004	Phenol	Activated Carbon.
Dazomet	259	35602	Heterocyclic	Chemical Oxidation.
Thiophanate Methyl	260	102001	Carbamate	Hydrolysis.
Thiram	261	79801	Dithiocarbamate	Activated Carbon.
Toxaphene	262	80501	Bicyclic	Activated Carbon.
Merphos	263	74901	Phosphorotrithioate	Hydrolysis.
Trifluralin or Treflan	264	36101	Toluidine	Activated Carbon.
Warfarin	265	(*)	Coumarin	Activated Carbon.

LIST OF APPROPRIATE POLLUTION CONTROL TECHNOLOGIES [1]—Continued

PAI name [2]	PAI code [3]	Shaughnessy code [4]	Structural group [5]	Treatment technology
Zinc MBT	266	51705	Organozinc	Precipitation.
Zineb	267	14506	Dithiocarbamate	Activated Carbon.
Ziram	268	34805	Dithiocarbamate	Activated Carbon.
Triallate	269	78802	Thiocarbamate	Activated Carbon.
Phenothrin	270	69005	Pyrethrin	Activated Carbon.
Tetramethrin	271	69003	Pyrethrin	Activated Carbon.
Chloropropham	272	18301	Carbamate	Hydrolysis.
Non-272 PAIs				
CFC 11	.....	13	Alkyl Halide	Activated Carbon.
CFC 12	.....	14	Alkyl Halide	Activated Carbon.
Polyethylene	.....	152	Polymer	Activated Carbon.
Acrolein	.....	701	Alcohol	Activated Carbon.
Dimethyl-m-dioxan-4-ol acetate	.....	1001	Heterocyclic	Activated Carbon.
Dodecyl alcohol	.....	1509	Alcohol	Activated Carbon.
Tetradecyl alcohol	.....	1510	Alcohol	Activated Carbon.
Rosin amine D acetate	.....	4201	Alkyl Acid	Activated Carbon.
Dihydroabietylamine acetate	.....	4213	Alkyl Acid	Activated Carbon.
Amitrole	.....	4401	Heterocyclic	Activated Carbon.
Allyl isothiocyanate	.....	4901	Thiocyanate	Activated Carbon.
AMS	.....	5501	Inorganic	Pollution Prevention.
Calcium sulfate	.....	5602	Inorganic	Pollution Prevention.
Tartar emetic	.....	6201	Inorganic	Pollution Prevention.
Diphenylstibene 2-ethylhexanoate.	.....	6202	Aryl	Activated Carbon.
Streptomycin	.....	6306	Heterocyclic	Activated Carbon.
Oxytetracycline hydrochloride	.....	6308	Phthalamide	Activated Carbon.
Streptomycin sesquisulfate	.....	6310	Heterocyclic	Activated Carbon.
Neomycin sulfate	.....	6313	Benzeneamine	Activated Carbon.
Antimycin A	.....	6314	Heterocyclic	Activated Carbon.
Calcium oxytetracycline	.....	6321	Phthalamide	Activated Carbon.
Espesol 3A	.....	6601	Phosphorothioate	Activated Carbon.
Arsenic acid	.....	6801	Metallic	Precipitation.
Arsenic acid anhydride	.....	6802	Metallic	Precipitation.
Arsenous acid anhydride	.....	7001	Metallic	Precipitation.
Copper oxychloride	.....	8001	Metallic	Precipitation.
Basic cupric sulfate	.....	8101	Metallic	Precipitation.
Basic copper III—zinc sulfate complex (Declare copper and.	.....	8102	Metallic	Precipitation.
Bromophos	.....	8706	Phosphorothioate	Activated Carbon.
Benzyl bromoacetate	.....	8710	Benzoic acid	Activated Carbon.
Benzoic acid	.....	9101	Benzoic acid	Activated Carbon.
Benzyl diethyl ((2,6-xylylcarbamoyl)methyl) ammonium benzoate.	.....	9106	NR4	Activated Carbon.
Benzyl alcohol	.....	9502	Aryl	Activated Carbon.
3–Chloro-p-toluidine hydrochloride.	.....	9901	Chloropropionanilide	Activated Carbon.
Butoxyethoxy)ethyl thiocyanate	.....	10002	Thiocyanate	Activated Carbon.
2-Naphthol	.....	10301	Phenol	Activated Carbon.
Boric acid	.....	11001	Inorganic	Pollution Prevention.
Barium metaborate	.....	11101	Inorganic	Pollution Prevention.
Boron sodium oxide (B8Na2O13), tetrahydrate (12280–03–4).	.....	11103	Inorganic	Pollution Prevention.
Sodium metaborate (NaBO2)	.....	11104	Inorganic	Pollution Prevention.
Boron sodium oxide (B8Na2O13) (12008–41–2).	.....	11107	Inorganic	Pollution Prevention.
Boron sodium oxide (B4Na2O7), pentahydrate (12179–04–3).	.....	11110	Inorganic	Pollution Prevention.
Boron sodium oxide (B4Na2O7) (1330–43–4).	.....	11112	Inorganic	Pollution Prevention.
Polybutene	.....	11402	Polymer	Activated Carbon.
Polyisobutylene	.....	11403	Polymer	Activated Carbon.
Butyl cellosolve	.....	11501	Alcohol	Activated Carbon.
Butoxypolypropylene glycol	.....	11901	Polymer	Activated Carbon.
Neburon (ANSI)	.....	12001	Chloropropionanilide	Activated Carbon.
Methyltrimethylenedioxy)bis(4-methyl-1,3,2-dioxaborinane).	.....	12401	Bicyclic	Activated Carbon.
Oxybis(4,4,6-trimethyl-1,3,2-dioxaborinane).	.....	12402	Bicyclic	Activated Carbon.

LIST OF APPROPRIATE POLLUTION CONTROL TECHNOLOGIES [1]—Continued

PAI name [2]	PAI code [3]	Shaughnessy code [4]	Structural group [5]	Treatment technology
Cadmium chloride		12902	Metallic	Precipitation.
Lead arsenate, basic		13502	Metallic	Precipitation.
Lead arsenate		13503	Metallic	Precipitation.
Sodium arsenate		13505	Metallic	Precipitation.
Sodium arsenite		13603	Metallic	Precipitation.
Potassium bromide		13903	Inorganic	Pollution Prevention.
Camphor		15602	Bicyclic	Activated Carbon.
Carbon disulfide		16401	Inorganic	Pollution Prevention.
Carbon tetrachloride		16501	Alkyl Halide	Activated Carbon.
Barban (ANSI)		17601	Carbamate	Activated Carbon.
Chloro-2-propenyl)-3,5,7,triaza-1-azo niatricyclo(3.3.1.1)sup.		17902	Tricyclic	Activated Carbon.
Chlormequat chloride		18101	NR4	Activated Carbon.
Chloromethoxypropylmercuric acetate.		18401	Metallic	Precipitation.
Allidochlor		19301	Acetanilide	Activated Carbon.
Chromic acid		21101	Metallic	Precipitation.
Chromic oxide		21103	Metallic	Precipitation.
Cresol (unspec) (Cresylic acid)		22101	Phenol	Activated Carbon.
Cresol		22102	Phenol	Activated Carbon.
Copper (metallic)		22501	Metallic	Precipitation.
Copper ammonium carbonate		22703	Metallic	Precipitation.
Copper carbonate		22901	Metallic	Precipitation.
Copper hydroxide		23401	Metallic	Precipitation.
Copper chloride hydroxide (Cu2Cl(OH)3).		23501	Metallic	Precipitation.
Copper oxychloride sulfate		23503	Metallic	Precipitation.
Copper sulfate		24401	Metallic	Precipitation.
Copper (from triethanolamine complex).		24403	Metallic	Precipitation.
Copper as metallic (in the form of chelates of copper citrat).		24405	Metallic	Precipitation.
Copper as elemental from copper—ethylenediamine complex.		24407	Metallic	Precipitation.
Copper sulfate (anhydrous)		24408	Metallic	Precipitation.
Copper(I) oxide		25601	Metallic	Precipitation.
Cuprous thiocyanate		25602	Metallic	Precipitation.
Cyclohexane		25901	Aryl	Activated Carbon.
Cyclohexanone		25902	Cyclic Ketone	Activated Carbon.
Dichlobenil		27401	Chloropropionanilide	Activated Carbon.
Diquat dibromide		32201	NR4	Activated Carbon.
Dimethrin (ANSI)		34101	Pyrethrin	Activated Carbon.
Dicapthon		34502	Phosphorothioate	Activated Carbon.
Ziram, cyclohexylamine complex.		34806	Dithiocarbamate	Activated Carbon.
Butyl dimethyltrithioperoxycarbamate.		34807	Dithiocarbamate	Activated Carbon.
Daminozide		35101	Acetanilide	Activated Carbon.
Bis(trichloromethyl) sulfone		35601	Miscellaneous Organic	Activated Carbon
Bis(bromoacetoxy)-2-butene		35605	Alkyl Halide	Activated Carbon.
Dazomet, sodium salt		35607	Heterocyclic	Activated Carbon.
Butonate		35701	Phosphonate	Activated Carbon.
Trifluoro-4-nitro-m-cresol(**)=alpha,alpha,alpha-.		6201	Phenol	Activated Carbon.
Triethanolamine dinoseb (2-sec-Butyl-4,6-dinitrophenol).		37506	Phenol	Activated Carbon.
Sodium 4,6-dinitro-o-cresylate		37508	Phenol	Activated Carbon.
Dinitrophenol		37509	Phenol	Activated Carbon.
Alkanol* amine dinoseb (2-sec-butyl-4,6-dinitrophenol) *(s.		37511	Phenol	Activated Carbon.
Sodium dinoseb (2-sec-Butyl-4,6-dinitrophenol).		37512	Phenol	Activated Carbon.
Nitrilotriacetic acid, trisodium salt.		39106	Acetamide	Activated Carbon.
Trisodium(2-hydroxyethyl)ethylene diaminetriacetate.		39109	Acetanilide	Activated Carbon.
Ammonium ethylenediamine-tetraacetate.		39117	Acetamide	Activated Carbon.

LIST OF APPROPRIATE POLLUTION CONTROL TECHNOLOGIES [1]—Continued

PAI name [2]	PAI code [3]	Shaughnessy code [4]	Structural group [5]	Treatment technology
Pentasodium diethylenetriaminepentaacetate.	.....	39120	Acetanilide	Activated Carbon.
Ethyl-1,3-hexanediol	.....	41001	Alcohol	Activated Carbon.
Ethylene	.....	41901	Miscellaneous Organic	Pollution Prevention.
EDC	.....	42003	EDB	Activated Carbon.
Methylene chloride	.....	42004	Alkyl Halide	Activated Carbon.
Methoxyethanol	.....	42202	Alcohol	Activated Carbon.
Ethylene glycol	.....	42203	Alcohol	Activated Carbon.
Butylene glycol	.....	42205	Alcohol	Activated Carbon.
Ethylene oxide	.....	42301	Miscellaneous Organic	Pollution Prevention.
Copper(II) oxide	.....	42401	Metallic	Precipitation.
Cuprous and cupric oxide, mixed.	.....	42403	Metallic	Precipitation.
Propylene oxide	.....	42501	Miscellaneous Organic	Pollution Prevention.
Formaldehyde	.....	43001	Miscellaneous Organic	Pollution Prevention.
Paraformaldehyde	.....	43002	Polymer	Activated Carbon.
Bis(2-butylene) tetrahydro-2-furaldehyde.	.....	43302	Tricyclic	Activated Carbon.
Giberellic acid	.....	43801	Tricyclic	Activated Carbon.
Potassium gibberellate	.....	43802	Tricyclic	Activated Carbon.
Glutaral	.....	43901	Alcohol	Activated Carbon.
Copper citrate	.....	44005	Metallic	Precipitation.
Methyl nonyl ketone	.....	44102	Miscellaneous Organic	Activated Carbon.
Methyl-2-pentanone	.....	44105	Miscellaneous Organic	Activated Carbon.
Monosodium 2,2'-methylenebis (3,4,6-trichlorophenate).	.....	44902	Chlorophene	Activated Carbon.
Potassium 2,2'-methylenebis (3,4,6-trichlorophenate).	.....	44904	Chlorophene	Activated Carbon.
Hexachloroepoxyoctahydro-endo, exo-dimethanoaphthalene 85%.	.....	45001	Tricyclic	Activated Carbon.
Chlorhexidine diacetate	.....	45502	Chloropropionanilide	Activated Carbon.
Hydrocyanic acid	.....	45801	Inorganic	Activated Carbon.
Hydroxyethyl octyl sulfide	.....	46301	Alcohol	Activated Carbon.
Heptadecenyl-2-(2-hydroxyethyl)-2-i midazolinium chloride.	.....	46608	NR4	Activated Carbon.
Hydroxyethyl)-2-alkyl-2-imidazoline (as in fatty acids of t.	.....	46609	NR4	Activated Carbon.
IBA	.....	46701	Bicyclic	Activated Carbon.
Dihydropyrone	.....	46801	Cyclic ketone	Activated Carbon.
Butoxypolypropoxypolyethoxyethanol-iodine complex.	.....	46901	Polymer	Activated Carbon.
Polyethoxypolypropoxyethanol-iodine complex.	.....	46904	Polymer	Activated Carbon.
Use code no. 046904 (polyethoxypolypropoxy ethanol-iodine complex).	.....	46909	Polymer	Activated Carbon.
Iodine-potassium iodide complex.	.....	46917	Inorganic	Pollution Prevention.
Alkyl-omega-hydroxypoly(oxyethylen e)-iodine complex *(100%.	.....	46921	Polymer	Activated Carbon.
Lead acetate	.....	48001	Metallic	Precipitation.
Nickel sulfate hexahydrate	.....	50505	Metallic	Precipitation.
Maleic hydrazide, diethanolamine salt.	.....	51502	Hydrazide	Activated Carbon.
Maleic hydrazide, potassium salt.	.....	51503	Hydrazide	Activated Carbon.
Sodium 2-mercaptobenzothiolate.	.....	51704	Heterocyclic	Activated Carbon.
Mercuric chloride	.....	52001	Metallic	Precipitation.
Mercurous chloride	.....	52201	Metallic	Precipitation.
Metaldehyde	.....	53001	Miscellaneous Organic	Activated Carbon.
Methylated naphthalenes	.....	54002	Aryl	Activated Carbon.
Sodium 2,2'-methylenebis(4-chlorophenate).	.....	55005	Chlorophene	Activated Carbon.
Naphthalene	.....	55801	Aryl	Activated Carbon.
NAD	.....	56001	Benzoic Acid	Activated Carbon.
NAA (1–Naphthaleneacetic Acid).	.....	56002	Benzoic Acid	Activated Carbon.

LIST OF APPROPRIATE POLLUTION CONTROL TECHNOLOGIES [1]—Continued

PAI name [2]	PAI code [3]	Shaughnessy code [4]	Structural group [5]	Treatment technology
Potassium 1-naphthaleneacetate.	.....	56003	Benzoic Acid	Activated Carbon.
Ammonium 1-naphthaleneacetate.	.....	56004	Benzoic Acid	Activated Carbon.
Sodium 1-naphthaleneacetate	.....	56007	Benzoic Acid	Activated Carbon.
Ethyl 1-naphthaleneacetate	.....	56008	Benzoic Acid	Activated Carbon.
Nitrophenol	.....	56301	Phenol	Activated Carbon.
Nicotine	.....	56702	Pyridine	Activated Carbon.
Carbophenothion (ANSI)	.....	58102	Phosphorodithioate	Activated Carbon.
Sodium 5-chloro-2-(4-chloro-2-(3-(3,4-dichlorophenyl)ureido).	.....	58802	Aryl Halide	Activated Carbon.
Monocrotophos	.....	58901	Phosphate	Activated Carbon.
Chlordimeform	.....	59701	Chloropropionanilide	Activated Carbon.
Chlordimeform hydrochloride	.....	59702	Chloropropionanilide	Activated Carbon.
Thiabendazole hypophosphite	.....	60102	Hydrazide	Activated Carbon.
Hexachlorobenzene	.....	61001	Lindane	Activated Carbon.
Butyl paraben	.....	61205	Phenol	Activated Carbon.
Paraquat dichloride	.....	61601	Pyridine	Activated Carbon.
Chloro-4-phenylphenol	.....	62206	Chlorophene	Activated Carbon.
Chloro-2-phenylphenol	.....	62208	Chlorophene	Activated Carbon.
Chloro-2-biphenylol, potassium salt.	.....	62209	Chlorophene	Activated Carbon.
Chloro-2-phenylphenol	.....	62210	Chlorophene	Activated Carbon.
Chloro-2-phenylphenol, potassium salt.	.....	62211	Chlorophene	Activated Carbon.
Sodium phenate	.....	64002	Phenol	Activated Carbon.
Butylphenol, sodium salt	.....	64115	Phenol	Activated Carbon.
Ammonium 2-phenylphenate	.....	64116	Phenol	Activated Carbon.
Chloro-2-cyclopentylphenol	.....	64202	Chlorophene	Activated Carbon.
Bithionolate sodium	.....	64203	Chlorophene	Activated Carbon.
Chloro-3-cresol	.....	64206	Chlorophene	Activated Carbon.
Sodium 2,4,5-trichlorophenate	.....	64217	Chlorophene	Activated Carbon.
Aluminum phosphide	.....	66501	Inorganic	Pollution Prevention.
Phosphorus	.....	66502	Inorganic	Pollution Prevention.
Magnesium phosphide	.....	66504	Inorganic	Pollution Prevention.
1-(Alkyl*amino)-3-aminopropane* (Fatty acids of coconut oil).	.....	67301	Iminamide	Activated Carbon.
Alkyl* amino)-3-aminopropane *(53%C12, 19%C14, 8.5%C16, 7%C8.	.....	67305	Iminamide	Activated Carbon.
Alkyl*amino)-3-aminopropane benzoate*(fatty acids of coconut.	.....	67307	Iminamide	Activated Carbon.
Alkyl* dipropoxyamine *(47% C12, 18% C14, 10% C18, 9% C10, 8.	.....	67308	Iminamide	Activated Carbon.
Alkyl*amino)-3-aminopropane hydroxyacetate* (acids of coconut.	.....	67309	Iminamide	Activated Carbon.
Alkyl* amino)-3-aminopropane *(42%C12, 26%C18, 15%C14, 8%C16.	.....	67310	Iminamide	Activated Carbon.
Alkyl*amino)-3-aminopropane diacetate* (fatty acids of coconut.	.....	67313	Iminamide	Activated Carbon.
Octadecenyl-1,3-propanediamine monogluconate.	.....	67316	Acetamide	Activated Carbon.
Alkyl* amine acetate *(5%C8, 7%C10, 54%C12, 19%C14, 8%C16,.	.....	67329	Iminamide	Activated Carbon.
Pindone sodium salt	.....	67704	Indandione	Activated Carbon.
Diphacinone, sodium salt	.....	67705	Indandione	Activated Carbon.
Isovaleryl-1,3-indandione, calcium salt.	.....	67706	Indandione	Activated Carbon.
Methyl isothiocyanate	.....	68103	Thiocyanate	Pollution Prevention.
Potassium dichromate	.....	68302	Inorganic	Pollution Prevention.
Sodium chromate	.....	68303	Inorganic	Pollution Prevention.
Sodium dichromate	.....	68304	Metallic	Precipitation.

LIST OF APPROPRIATE POLLUTION CONTROL TECHNOLOGIES [1]—Continued

PAI name [2]	PAI code [3]	Shaughnessy code [4]	Structural group [5]	Treatment technology
Alkenyl* dimethyl ethyl ammonium bromide *(90%C18', 10%C16').	.....	69102	NR4	Activated Carbon.
Alkyl*-N-ethyl morpholinium ethyl sulfate *(92%C18, 8%C16).	.....	69113	Heterocyclic	Activated Carbon.
Alkyl* isoquinolinium bromide *(50% C12, 30% C14, 17% C16, 3).	.....	69115	Quinolin	Activated Carbon.
Alkyl* methyl isoquinolinium chloride *(55%C14, 12%C12, 17%C).	.....	69116	Quinolin	Activated Carbon.
Cetyl trimethyl ammonium bromide.	.....	69117	NR4	Activated Carbon.
Cetyl pyridinium bromide	.....	69118	Pyridine	Activated Carbon.
Dodecyl dimethyl benzyl ammonium naphthenate.	.....	69127	NR4	Activated Carbon.
Alkyl* dimethyl ethylbenzyl ammonium cyclohexylsulfamate *(5).	.....	69135	NR4	Activated Carbon.
Alkyl*-N-ethyl morpholinium ethyl sulfate *(66%C18, 25%C16).	.....	69147	Heterocyclic	Activated Carbon.
Alkyl* trimethyl ammonium bromide *(95%C14, 5%C16).	.....	69153	NR4	Activated Carbon.
Benzyl((dodecylcarbamoyl) methyl)di methyl ammonium chloride.	.....	69159	NR4	Activated Carbon.
Cetyl pyridinium chloride	.....	69160	Pyridine	Activated Carbon.
Alkyl* dimethyl ethyl ammonium bromide *(85%C16, 15%C18).	.....	69186	NR4	Activated Carbon.
Cetyl-N-ethylmorpholinium ethyl sulfate.	.....	69187	Heterocyclic	Activated Carbon.
Use code no. 069102 (Alkenyl* Dimethyl Ethyl Ammonium bromide).	.....	69198	NR4	Activated Carbon.
p-Aminopyridine	.....	69201	Pyridine	Activated Carbon.
Nitrapyrin (ANSI)	.....	69203	Pyridine	Activated Carbon.
Alkyl pyridines	.....	69205	Pyridine	Activated Carbon.
Pyrazon (ANSI)	.....	69601	Heterocyclic	Activated Carbon.
Capsaicin (in oleoresin of capsicum).	.....	70701	Phenol	Activated Carbon.
Ryanodine	.....	71502	Tricyclic	Activated Carbon.
Silver	.....	72501	Inorganic	Pollution Prevention.
Silver chloride	.....	72506	Inorganic	Pollution Prevention.
Silver thiuronium acrylate copolymer.	.....	72701	Polymer	Activated Carbon.
Sodium chlorate	.....	73301	Inorganic	Pollution Prevention.
Calcium cyanide	.....	74001	Inorganic	Pollution Prevention.
Sodium cyanide	.....	74002	Inorganic	Pollution Prevention.
Cryolite	.....	75101	Inorganic	Pollution Prevention.
Sodium fluoride	.....	75202	Inorganic	Pollution Prevention.
Ammonium fluosilicate	.....	75301	Inorganic	Pollution Prevention.
Sodium fluosilicate	.....	75306	Inorganic	Pollution Prevention.
Potassium iodide	.....	75701	Inorganic	Pollution Prevention.
Potassium tetrathionate	.....	75903	Inorganic	Pollution Prevention.
Potassium nitrate	.....	76103	Inorganic	Pollution Prevention.
Sodium nitrate	.....	76104	Inorganic	Pollution Prevention.
Sodium nitrite	.....	76204	Inorganic	Pollution Prevention.
Benzenesulfonamide, N-chloro-, sodium salt.	.....	76501	Sulfonamide	Activated Carbon.
Salicyclic acid	.....	76202	Benzoic Acid	Activated Carbon.
Ethoxyethyl p-methoxycinnamate.	.....	76604	Aryl	Activated Carbon.
Calcium polysulfide	.....	76702	Polymer	Activated Carbon.
Strychnine	.....	76901	Tricyclic	Activated Carbon.
Strychnine sulfate	.....	76902	Tricyclic	Activated Carbon.
Niclosamide	.....	77401	Chlorobenzamide	Activated Carbon.
Dibromosalicylamilide	.....	77402	Chlorobenzamide	Activated Carbon.
Tribromsalan	.....	77404	Chlorobenzamide	Activated Carbon.
Dibromosalicylanilide	.....	77405	Chlorobenzamide	Activated Carbon.

LIST OF APPROPRIATE POLLUTION CONTROL TECHNOLOGIES [1]—Continued

PAI name [2]	PAI code [3]	Shaughnessy code [4]	Structural group [5]	Treatment technology
Chlorosalicylanilide		77406	Chlorobenzamide	Activated Carbon.
Sulfur		77501	Inorganic	Pollution Prevention.
Sulfaquinoxaline		77901	Sulfanilamide	Activated Carbon.
Sulfacetamide		77904	Sulfanilamide	Activated Carbon.
Sulfuryl fluoride		78003	Inorganic	Pollution Prevention.
Sodium bisulfite		78201	Inorganic	Pollution Prevention.
Tetrachloroethylene		78501	EDB	Activated Carbon.
Ethoxylated isooctylphenol		79004	Phenol	Activated Carbon.
Lauric diethanolamide		79018	Acetanilide	Activated Carbon.
Triethanolamine oleate		79025	NR4	Activated Carbon.
Dioctyl sodium sulfosuccinate		79027	Thiosulfonate	Activated Carbon.
Use code no. 069179 (alkyl*mono-ethanolamide).		79036	Miscellaneous Organic	Activated Carbon.
Alkyl* diethanolamide *(70%C12, 30%C14).		79045	Miscellaneous Organic	Activated Carbon.
Tetradecyl formate		79069	Alkyl Acid	Activated Carbon.
Polyoxyethylene sorbitol oleate-laurate.		79075	Polymer	Activated Carbon.
Polyethoxylated stearylamine		79094	Polymer	Activated Carbon.
Capric diethanolamide		79099	Acetanilide	Activated Carbon.
Calcium thiosulfate		80101	Inorganic	Pollution Prevention.
Ammonium thiosulfate		80103	Inorganic	Pollution Prevention.
Thymoxydichloroacetic acid		80401	Benzoic Acid	Activated Carbon.
Thymol		80402	Phenol	Activated Carbon.
Sodium trichloroacetate		81001	Alkyl Halide	Activated Carbon.
Trichloroacetic acid		81002	Alkyl Halide	Activated Carbon.
Hexahydro-1,3,5-tris(2-hydroxy-ethyl)-s-triazine.		83301	s-Triazine	Activated Carbon.
2-(Hydroxymethyl)-2-nitro-1,3-propanediol.		83902	Alcohol	Activated Carbon.
Bomyl		84201	Phosphate	Activated Carbon.
Turpentine		84501	Miscellaneous Organic	Activated Carbon.
Chloro-1-(2,5-dichlorophen-yl)vinyl) O,O-diethyl phosphorothi.		84901	Phosphorothioate	Activated Carbon.
Zinc chloride		87801	Metallic	Precipitation.
Zinc 2-pyridinethiol-1-oxide		88002	Metallic	Precipitation.
Hydroxy-2-(1H)-pyridinethione, sodium salt.		88004	Pyridine	Activated Carbon.
Omadine TBAO		88005	Pyridine	Activated Carbon.
Zinc naphthenate		88301	Metallic	Precipitation.
Zinc oxide		88502	Metallic	Precipitation.
Zinc phosphide (Zn3P2)		88601	Metallic	Precipitation.
Zinc phenol sulfonate		89002	Metallic	Precipitation.
Zinc sulfate, basic		89101	Metallic	Precipitation.
Dimetilan		90101	Carbamate	Activated Carbon.
Carboxin		90201	Heterocyclic	Activated Carbon.
Oxycarboxin		90202	Heterocyclic	Activated Carbon.
Benzocaine		97001	Benzeneamine	Activated Carbon.
Piperalin		97003	2,4-D	Activated Carbon.
Tetracaine hydrochloride		97005	Benzeneamine	Activated Carbon.
Formetanate hydrochloride		97301	Toluamide	Activated Carbon.
Azacosterol HCl		98101	Tricyclic	Activated Carbon.
Use code no. 039502 (gentian violet).		98401	NR4	Activated Carbon.
Ammonium alum		98501	Inorganic	Pollution Prevention.
Bismuth subgallate		98601	Metallic	Precipitation.
Chlorflurenol, methyl ester		98801	Aryl Halide	Activated Carbon.
Benzisothiazolin-3-one		98901	Heterocyclic	Activated Carbon.
Methyl 2-benzimidazolecarbamate phosphate.		99102	Carbamate	Activated Carbon.
Ethephon		99801	Phosphate	Activated Carbon.
Pentanethiol		100701	Miscellaneous Organic	Activated Carbon.
Nitrobutyl)morpholine		100801	Heterocyclic	Activated Carbon.
Ethyl-2-nitrotrimethyl-ene)dimorpholine.		100802	Heterocyclic	Activated Carbon.
Tolyl diiodomethyl sulfone		101002	Thiosulfonate	Activated Carbon.
Isobutyric acid		101502	Alkyl Acid	Activated Carbon.
Dibromo-3-nitrilopropionamide		101801	Acetamide	Activated Carbon.
Polyethoxylated oleylamine		101901	Acetamide	Activated Carbon.

LIST OF APPROPRIATE POLLUTION CONTROL TECHNOLOGIES [1]—Continued

PAI name [2]	PAI code [3]	Shaughnessy code [4]	Structural group [5]	Treatment technology
Dinitramine (ANSI)		102301	Nitrobenzoate	Activated Carbon.
Phenylethyl propionate		102601	Phenylcrotonate	Activated Carbon.
Eugenol		102701	Phenol	Activated Carbon.
Tricosene		103201	Miscellaneous Organic	Activated Carbon.
Tricosene		103202	Miscellaneous Organic	Activated Carbon.
Sodium 1,4′,5′-trichloro-2′-(2,4,5-trichlorophenoxy)methanes.		104101	2,4-D	Activated Carbon.
Hexahydro-1,3,5-tris(2-hydroxypropyl)-s-triazine.		105601	s-Triazine	Activated Carbon.
Methazole		106001	Hydrazide	Activated Carbon.
Difenzoquat methyl sulfate		106401	Hydrazide	Activated Carbon.
Butralin		106501	Benzeneamine	Activated Carbon.
Fosamine ammonium		106701	Carbamate	Activated Carbon.
Asulam		106901	Carbamate	Activated Carbon.
Sodium asulam		106902	Carbamate	Activated Carbon.
Hydroxymethoxymethyl-1-aza-3,7-dioxabicyclo(3.3.0)octane.		107001	Bicyclic	Activated Carbon.
Hydroxymethyl-1-aza-3,7-dioxabicyclo(3.3.0)octane.		107002	Bicyclic	Activated Carbon.
Hydroxypoly(methyleneoxy)* methyl-1-aza-3,7-dioxabicyclo(3.3).		107003	Bicyclic	Activated Carbon.
Chloro-2-methyl-3(2H)-isothiazolone.		107103	Heterocyclic	Activated Carbon.
Methyl-3(2H)-isothiazolone		107104	Heterocyclic	Activated Carbon.
Trimethoxysilyl)propyl dimethyl octadecyl ammonium chloride.		107401	NR4	Activated Carbon.
Kinoprene		107502	Ester	Activated Carbon.
Triforine (ANSI)		107901	Hydrazide	Activated Carbon.
Pirimiphos-methyl (ANSI)		108102	Phosphorothioate	Activated Carbon.
Thiobencarb		108401	Thiocarbamate	Activated Carbon.
Ancymidol (ANSI)		108601	Pyrimidine	Activated Carbon.
Oxadiazon (ANSI)		109001	Hydrazide	Activated Carbon.
Mepiquat chloride		109101	NR4	Activated Carbon.
Fluvalinate		109302	Toluamide	Activated Carbon.
Chloro-N-(hydroxymethyl)acetamide.		109501	Acetamide	Activated Carbon.
Dikegulac sodium		109601	Tricyclic	Activated Carbon.
Iprodione (ANSI)		109801	Hydrazide	Activated Carbon.
Phenylmethyl)-9-(tetrahydro-2H-pyran-2-yl)-9H-purin-6-amine.		110001	Pyrimidine	Activated Carbon.
Prodiamine		110201	Benzeneamine	Activated Carbon.
Erioglaucine		110301	Benzeneamine	Activated Carbon.
Tartrazine		110302	Hydrazide	Activated Carbon.
Dodemorph acetate		110401	Heterocyclic	Activated Carbon.
Ethofumesate (ANSI)		110601	Bicyclic	Activated Carbon.
Aldoxycarb (ANSI)		110801	Carbamate	Activated Carbon.
Diclofop-methyl		110902	Aryl Halide	Activated Carbon.
Bromo-1-(bromomethyl)-1,3-propanediCarbon.itrile.		111001	Isocyanate	Activated Carbon.
Poly (imino imidocarbonyli minoimidocarbony liminohexameth ylene).		111801	Polymer	Activated Carbon.
Imazalil		111901	Aryl Halide	Activated Carbon.
Bromadiolone		112001	Coumarin	Activated Carbon.
Brodifacoum		112701	Coumarin	Activated Carbon.
Bromethalin (ANSI)		112802	Aryl Amine	Activated Carbon.
Fluridone (ANSI)		112900	Aryl Halide	Activated Carbon.
Vinclozolin		113201	Aryl Halide	Activated Carbon.
Metalaxyl		113501	Benzeneamine	Activated Carbon.
Propetamphos (ANSI)		113601	Phosphoroamidothioate	Activated Carbon.
Methyl-1-naphthyl)maleimide		113701	Phthalamide	Activated Carbon.
Hexadecadien-1-yl acetate		114101	Ester	Activated Carbon.
Hexadecadien-1-yl acetate		114102	Ester	Activated Carbon.
Epoxy-2-methyloctadecane		114301	Heterocyclic	Activated Carbon.
Thiodicarb (ANSI)		114501	Thiocarbamate	Activated Carbon.
Dimethyloxazolidine (8CA & 9CA).		114801	Heterocyclic	Activated Carbon.
Trimethyloxazolidine		114802	Heterocyclic	Activated Carbon.
Hydroxyphenyl) oxoace tohydroximic chloride.		114901	Phenol	Activated Carbon.

LIST OF APPROPRIATE POLLUTION CONTROL TECHNOLOGIES [1]—Continued

PAI name [2]	PAI code [3]	Shaughnessy code [4]	Structural group [5]	Treatment technology
EEEBC		115001	Carbamate	Activated Carbon.
MDM Hydantoin		115501	Hydrazide	Activated Carbon.
DMDM Hydantoin		115502	Hydrazide	Activated Carbon.
Triclopyr (ANSI)		116001	Pyridine	Activated Carbon.
Triethylamine triclopyr		116002	Pyridine	Activated Carbon.
Butoxyethyl triclopyr		116004	Pyridine	Activated Carbon.
Decenyl)dihydro-2(3H)-furanone		116501	Ester	Activated Carbon.
Cytokinins		116801	Toluidine	Activated Carbon.
Benzyladenine		116901	Pyrimidine	Activated Carbon.
Clopyralid, monoethanolamine salt.		117401	Pyridine	Activated Carbon.
Clopyralid (ANSI)		117403	Pyridine	Activated Carbon.
Flucythrinate (ANSI)		118301	Pyrethrin	Activated Carbon.
Hydramethylnon (ANSI)		118401	Iminimide	Activated Carbon.
Chlorsulfuron		118601	s-Triazine	Activated Carbon.
Dimethipin		118901	Heterocyclic	Activated Carbon.
Hexadecenal		120001	Miscellaneous Organic	Activated Carbon.
Tetradecenal		120002	Miscellaneous Organic	Activated Carbon.
Thidiazuron		120301	Urea	Activated Carbon.
Metronidazole		120401	Hydrazide	Activated Carbon.
Erythrosine B		120901	Tricyclic	Activated Carbon.
Sethoxydim		121001	Cyclic Ketone	Activated Carbon.
Clethodim		121011	Heterocyclic	Activated Carbon.
Cyromazine		121301	s-Triazine	Activated Carbon.
Tralomethrin		121501	Pyrethrin	Activated Carbon.
Azadirachtin		121701	Tricyclic	Activated Carbon.
Tridecen-1-yl acetate		121901	Ester	Activated Carbon.
Tridecen-1-yl acetate		121902	Ester	Activated Carbon.
Sulfometuron methyl		122001	Pyrimidine	Activated Carbon.
Metsulfuron-methyl		122010	s-Triazine	Activated Carbon.
Propiconazole		122101	Aryl Halide	Activated Carbon.
Furanone, dihydro-5-pentyl		122301	Cyclic Ketone	Activated Carbon.
Furanone, 5-heptyldihydro-		122302	Cyclic Ketone	Activated Carbon.
Abamectin (ANSI)		122804	Tricyclic	Activated Carbon.
Fluazifop-butyl		122805	Pyridine	Activated Carbon.
Fluazifop-R-butyl		122809	Pyridine	Activated Carbon.
Flumetralin		123001	Nitrobenzoate	Activated Carbon.
Fosetyl-Al		123301	Phosphate	Activated Carbon.
Methanol, (((2-(dihydro-5-methyl-3(2H)-oxazolyl)-1-methyl)et.		123702	Heterocyclic	Activated Carbon.
Fomesafen		123802	Nitrobenzoate	Activated Carbon.
Tridiphane		123901	Aryl Halide	Activated Carbon.
POE isooctadecanol		124601	Alcohol	Activated Carbon.
Periplanone B		124801	Bicyclic	Activated Carbon.
Fenoxycarb		125301	Carbamate	Activated Carbon.
Clomazone		125401	Aryl Halide	Activated Carbon.
Clofentezine		125501	Aryl Halide	Activated Carbon.
Paclobutrazol		125601	Hydrazide	Activated Carbon.
Flurprimidol		125701	Pyrimidine	Activated Carbon.
Isoxaben		125851	Heterocyclic	Activated Carbon.
Isazofos		126901	Phosphorothioate	Activated Carbon.
Triadimenol		127201	Hydrazide	Activated Carbon.
Fenpropathrin		127901	Pyrethrin	Activated Carbon.
Sulfosate		128501	Phosphorothioate	Activated Carbon.
Fenoxaprop-ethyl		128701	Heterocyclic	Activated Carbon.
Quizalofop-ethyl		128711	Phthalimide	Activated Carbon.
Bensulfuron-methyl		128820	Pyrimidine	Activated Carbon.
Imazapyr		128821	Hydrazide	Activated Carbon.
Bifenthrin		128825	Pyrethrin	Activated Carbon.
Imazapyr, isopropylamine salt		128829	Hydrazide	Activated Carbon.
Sodium salt of 1-carboxymethyl-3,5,7-triaza-1-azoniatricyclo.		128832	s-Triazine	Activated Carbon.
Linalool		128838	Alcohol	Activated Carbon.
Imazaquin, monoammonium salt.		128840	Pyrimidine	Activated Carbon.
Imazethabenz		128842	Pyrimidine	Activated Carbon.
Thifensulfuron methyl		128845	s-Triazine	Activated Carbon.
Imazaquin		128848	Pyrimidine	Activated Carbon.
Myclobutanil (ANSI)		128857	s-Triazine	Activated Carbon.
Zinc borate (3ZnO, 2B03, 3.5H2O; mw 434.66).		128859	Metallic	Precipitation.

LIST OF APPROPRIATE POLLUTION CONTROL TECHNOLOGIES [1]—Continued

PAI name [2]	PAI code [3]	Shaughnessy code [4]	Structural group [5]	Treatment technology
Cyhalothrin		128867	Pyrethrin	Activated Carbon.
Potassium cresylate		128870	Phenol	Activated Carbon.
Triflumizole		128879	Toluidine	Activated Carbon.
Tribenuron methyl		128887	s-Triazine	Activated Carbon.
Cyhalothrin		128897	Pyrethrin	Activated Carbon.
Chlorimuron-ethyl		128901	Pyrimidine	Activated Carbon.
Dodecen-1-yl acetate		128906	Ester	Activated Carbon.
Dodecen-1-yl acetate		128907	Ester	Activated Carbon.
DDOL		128908	Alcohol	Activated Carbon.
Farnesol		128910	Alcohol	Activated Carbon.
Nerolidol		128911	Alcohol	Activated Carbon.
Tefluthrin		128912	Pyrethrin	Activated Carbon.
Bromoxynil heptanoate		128920	Chloropropionanilide	Activated Carbon.
Imazethapyr		128922	Pyrimidine	Activated Carbon.
Imazethapyr, ammonium salt		128923	Pyrimidine	Activated Carbon.
Chitosan		128930	Polymer	Activated Carbon.
Sulfuric acid, monourea adduct		128961	Urea	Activated Carbon.
Hydroprene		128966	Miscellaneous Organic	Activated Carbon.
Triasulfuron		128969	Urea	Activated Carbon.
Primisulfuron-methyl		128973	Urea	Activated Carbon.
Uniconazole (ANSI)		128976	s-Triazine	Activated Carbon.
Tetradecenyl acetate		128980	Miscellaneous Organic	Activated Carbon.
Chitin		128991	Polymer	Activated Carbon.
Sulfluramid		128992	Sulfonamide	Activated Carbon.
Dithiopyr (ANSI)		128994	Pyridine	Activated Carbon.
Nicosulfuron		129008	Pyrimidine	Activated Carbon.
Zinc		129015	Metallic	Precipitation.
Tetradecen-1-ol, acetate, (E)-		129019	Alkyl Acid	Activated Carbon.
Imazaquin, sodium salt		129023	Pyrimidine	Activated Carbon.
Dodecadien-1-ol		129028	Alcohol	Activated Carbon.
Ionone		129030	Miscellaneous Organic	Activated Carbon.
Dicamba, aluminum salt		129042	Aryl Halide	Activated Carbon.
Benzenemethanaminium, N-(2-((2,6-dimethylphenyl)amino)-2-oxo.		129045	NR4	Activated Carbon.
Fenoxaprop-p-Ethyl		129092	Tricyclic	Activated Carbon.
Alkyl* bis(2-hydroxyethyl) ammonium acetate *(as in fatty ac.		169103	NR4	Activated Carbon.
Alkenyl* dimethyl ammonium acetate *(75% C18', 25% C16').		169104	NR4	Activated Carbon.
Amines, N-coco alkyltrimethylenedi-, adipates.		169109	Iminamide	Activated Carbon.
Dialkyl* dimethyl ammonium bentonite *(as in fatty acids of.		169111	NR4	Activated Carbon.
Alkyl* bis(2-hydroxyethyl) amine acetate *(65% C18, 30% C16,.		169125	Acetamide	Activated Carbon.
Dodecyl bis(hydroxy ethyl) dioctyl ammonium phosphate.		169154	NR4	Activated Carbon.
Dodecyl bis(2-hydroxyethyl) octyl hydrogen ammonium phosphat.		169155	NR4	Activated Carbon.
Didecyl - N - methyl - 3 - (trimethoxysilyl) propanaminium chloride.		169160	NR4	Activated Carbon.
Cholecalciferol		202901	Bicyclic	Activated Carbon.
Use code no. 202901 (Vitamin D3).		208700	Bicyclic	Activated Carbon.
Alkyl* N,N-bis(2-hydroxy-ethyl)amine *(100% C8–C18).		210900	NR4	Activated Carbon.
Bromo-2-nitropropane-1,3-diol		216400	Alcohol	Activated Carbon.
Use code no. 114601 (cyclohexyl-4, 5-dichloro- 4-isothioazolin-3-one).		229300	Heterocyclic	Activated Carbon.
Diethatyl ethyl		279500	Toluidine	Activated Carbon.
Hydroprene (ANSI)		486300	Miscellaneous Organic	Activated Carbon.
Zinc sulfate monohydrate		527200	Metallic	Precipitation

LIST OF APPROPRIATE POLLUTION CONTROL TECHNOLOGIES [1]—Continued

PAI name [2]	PAI code [3]	Shaughnessy code [4]	Structural group [5]	Treatment technology
Geraniol	.....	597501	Alcohol	Activated Carbon.

[1] The 272 Pesticide Active Ingredients (PAIs) are listed first, by PAI code, followed by the non-272 PAIs from the 1988 FIFRA and TSCA Enforcement System (FATES) Database, which are listed in Shaughnessy code order. PAIs that were exempted or reserved from the PFPR effluent guidelines are not listed in the table.
[2] The non-272 PAI names are taken directly from the 1988 FATES database. Several of the PAI names are truncated because the PAI names listed in the FATES database are limited to 60 characters.
[3] The non-272 PAIs do not have PAI codes.
[4] All Shaughnessy codes are taken from the 1988 FATES database. Some of the 272 PAIs are not listed in the 1988 FATES database; therefore, no Shaughnessy codes are listed for these PAIs.
[5] Structural groups are based on an analysis of the chemical structures of each PAI.
[6] EPA has also received data indicating that acid hydrolysis may also be effective in treating this PAI.
* This PAI code represents a category or group of PAIs; therefore, it has multiple Shaughnessy codes.

[61 FR 57554, Nov. 6, 1996]

PART 457—EXPLOSIVES MANUFACTURING POINT SOURCE CATEGORY

Subpart A—Manufacture of Explosives Subcategory

Sec.
457.10 Applicability; description of the commercial manufacture of explosives subcategory.
457.11 Specialized definitions.
457.12 Effluent limitations and guidelines representing the degree of effluent reduction attainable by the application of the best practicable control technology currently available.

Subpart B [Reserved]

Subpart C—Explosives Load, Assemble, and Pack Plants Subcategory

457.30 Applicability; description of the commercial explosives load, assemble and pack plants subcategory.
457.31 Specialized definitions.
457.32 Effluent limitations and guidelines representing the degree of effluent reduction attainable by the application of the best practicable control technology currently available.

AUTHORITY: Secs. 301, 304(b) and (c), 306(b), 307(b) and (c), Federal Water Pollution Control Acts, as amended (33 U.S.C. 1251, 1311, 1314(b) and (c), 1316(b) and 1317(b) and (c), 86 Stat. 816 *et seq.;* Pub. L. 92–500) (the Act).

SOURCE: 41 FR 10184, Mar. 9, 1976, unless otherwise noted.

Subpart A—Manufacture of Explosives Subcategory

§ 457.10 Applicability; description of the commercial manufacture of explosives subcategory.

The provisions of this subpart are applicable to discharges resulting from the production of explosives.

§ 457.11 Specialized definitions.

For the purpose of this subpart:

(a) Except as provided below, the general definitions, abbreviations and methods of analysis set forth in 40 CFR part 401 shall apply to this subpart.

(b) The term ''product'' shall mean dynamite, nitroglycerin, cyclotrimethylene trinitramine (RDX), cyclotetramethylene tetranitramine (HMX), and trinitrotoluene (TNT).

§ 457.12 Effluent limitations and guidelines representing the degree of effluent reduction attainable by the application of the best practicable control technology currently available.

Except as provided in §§ 125.30 through 125.32, any existing point source subject to this subpart, shall achieve the following effluent limitations representing the degree of effluent reduction attainable by the application of the best practicable control technology currently available (BPT):

(a) The following limitations establish the quantity or quality of pollutants or pollutant properties, controlled by this paragraph, which may be discharged from the manufacture of explosives by a point source subject to the provisions of this paragraph after

application of the best practical control technology currently available:

[Metric units, kg/kkg of product; English units, lb/1,000 lb of product]

Effluent characteristic	Effluent limitations	
	Maximum for any 1 day	Average of daily values for 30 consecutive days shall not exceed—
COD	7.77	2.59
BOD5	0.72	0.24
TSS	0.25	0.084
pH	(1)	(1)

[1] Within the range 6.0 to 9.0.

[41 FR 10184, Mar. 9, 1976, as amended at 60 FR 33971, June 29, 1995]

Subpart B [Reserved]

Subpart C—Explosives Load, Assemble, and Pack Plants Subcategory

§ 457.30 Applicability; description of the commercial explosives load, assemble and pack plants subcategory.

The provisions of this subpart are applicable to discharges resulting from explosives load, assemble and pack plants.

§ 457.31 Specialized definitions.

For the purpose of this subpart:

(a) Except as provided below, the general definitions, abbreviations and methods of analysis set forth in 40 CFR part 401 shall apply to this subpart.

(b) The term ''product'' shall mean products from plants which blend explosives and market a final product, and plants that fill shells and blasting caps. Examples of such installations would be plants manufacturing ammonium nitrate and fuel oil (ANFO), nitrocarbonitrate (NCN), slurries, water gels, and shells.

§ 457.32 Effluent limitations and guidelines representing the degree of effluent reduction attainable by the application of the best practicable control technology currently available.

Except as provided in §§ 125.30 through 125.32, any existing point source subject to this subpart, shall achieve the following effluent limitations representing the degree of effluent reduction attainable by the application of the best practicable control technology currently available (BPT):

(a) The following limitations establish the quantity or quality of pollutants or pollutant properties, controlled by this paragraph, which may be discharged from the explosives load, assemble and pack plants by a point source subject to the provisions of this paragraph after application of the best practical control technology currently available:

[Metric units, kg/kkg of product; English units, lb/1,000 lb of product]

Effluent characteristic	Effluent limitations	
	Maximum for any 1 day	Average of daily values for 30 consecutive days shall not exceed—
O&G	0.11	0.035
TSS	0.26	0.088
pH	(1)	(1)

[1] Within the range 6.0 to 9.0.

[41 FR 10184, Mar. 9, 1976, as amended at 60 FR 33971, June 29, 1995]

PART 458—CARBON BLACK MANUFACTURING POINT SOURCE CATEGORY

Subpart A—Carbon Black Furnace Process Subcategory

Sec.
458.10 Applicability; description of the carbon black furnace process subcategory.
458.11 Specialized definitions.
458.12 [Reserved]
458.13 Effluent limitations guidelines representing the degree of effluent reduction attainable by the application of the best available technology economically achievable.
458.14 [Reserved]
458.15 Standards of performance for new sources.
458.16 Pretreatment standards for new sources.

Subpart B—Carbon Black Thermal Process Subcategory

458.20 Applicability; description of the carbon black thermal process subcategory.
458.21 Specialized definitions.
458.22 Effluent limitations guidelines representing the degree of effluent reduction attainable by the application of the best

practicable control technology currently available.
458.23 Effluent limitations guidelines representing the degree of effluent reduction attainable by the application of the best available technology economically achievable.
458.24 [Reserved]
458.25 Standards of performance for new sources.
458.26 Pretreatment standards for new sources.

Subpart C—Carbon Black Channel Process Subcategory

458.30 Applicability; description of the carbon black channel process subcategory.
458.31 Specialized definitions.
458.32 Effluent limitations guidelines representing the degree of effluent reduction attainable by the application of the best practicable control technology currently available.
458.33 Effluent limitations guidelines representing the degree of effluent reduction attainable by the application of the best available technology economically achievable.
458.34 [Reserved]
458.35 Standards of performance for new sources.
458.36 Pretreatment standards for new sources.

Subpart D—Carbon Black Lamp Process Subcategory

458.40 Applicability; description of the carbon black lamp process subcategory.
458.41 Specialized definitions.
458.42 Effluent limitations guidelines representing the degree of effluent reduction attainable by the application of the best practicable control technology currently available.
458.43 Effluent limitations guidelines representing the degree of effluent reduction attainable by the application of the best available technology economically achievable.
458.44 [Reserved]
458.45 Standards of performance for new sources.
458.46 Pretreatment standards for new sources.

AUTHORITY: Secs. 301, 304 (b) and (c), 306(b), 307 (b) and (c), Federal Water Pollution Control Act, as amended (33 U.S.C. 1251, 1311, 1314 (b) and (c), 1316(b) and 1317 (b) and (c), 86 Stat. 816 *et seq.;* Pub. L. 92–500) (the Act).

SOURCE: 43 FR 1343, Jan. 9, 1978, unless otherwise noted.

Subpart A—Carbon Black Furnace Process Subcategory

§ 458.10 Applicability; description of the carbon black furnace process subcategory.

The provisions of this subpart are applicable to discharges resulting from the production of carbon black by the furnace process.

§ 458.11 Specialized definitions.

For the purpose of this subpart:

(a) Except as provided below, the general definitions, abbreviations and methods of analysis set forth in part 401 of this chapter shall apply to this subpart.

(b) The term ''product'' shall mean carbon black manufactured by the furnace process.

(c) The term ''process waste water'' shall mean waters which result from baghouse operations or thermal quench operations.

§ 458.12 [Reserved]

§ 458.13 Effluent limitations guidelines representing the degree of effluent reduction attainable by the application of the best available technology economically achievable.

The following limitations establish the quantity or quality of pollutants or pollutant properties, controlled by this paragraph, which may be discharged from the carbon black furnace process by a point source subject to the provisions of this subpart after application of the best available technology economically achievable: There shall be no discharge of process waste water pollutants to navigable waters.

§ 458.14 [Reserved]

§ 458.15 Standards of performance for new sources.

The following standards of performance establish the quantity or quality of pollutants or pollutant properties, controlled by this paragraph, which may be discharged from the carbon black furnace process by a new source subject to the provisions of this subpart: There shall be no discharge of process waste water pollutants to navigable waters.

§ 458.16 Pretreatment standards for new sources.

Any new source subject to this subpart that introduces process wastewater pollutants into a publicly owned treatment works must comply with 40 CFR part 403. In addition, the following pretreatment standard establishes the quantity or quality of pollutants or pollutant properties controlled by this section which may be discharged to a publicly owned treatment works by a new source subject to the provisions of this subpart:

Pollutant or pollutant property-Oil and grease.
Pretreatment standard-100mg/liter.

[60 FR 33972, June 29, 1995]

Subpart B—Carbon Black Thermal Process Subcategory

§ 458.20 Applicability: description of the carbon black thermal process subcategory.

The provisions of this subpart are applicable to discharges resulting from the production of carbon black by the thermal process.

§ 458.21 Specialized definitions.

For the purpose of this subpart:

(a) Except as provided below, the general definitions, abbreviations and methods of analysis set forth in part 401 of this chapter shall apply to this subpart.

(b) The term ''product'' shall mean carbon black manufactured by the thermal process.

(c) The term ''process waste water'' shall mean waters which result from baghouse operations or thermal quench operations.

§ 458.22 Effluent limitations guidelines representing the degree of effluent reduction attainable by the application of the best practicable control technology currently available.

Except as provided in §§ 125.30 through 125.32, any existing point source subject to this subpart, shall achieve the following effluent limitations representing the degree of effluent reduction attainable by the application of the best practicable control technology currently available (BPT): There shall be no discharge of process waste water pollutants into navigable waters.

[60 FR 33972, June 29, 1995]

§ 458.23 Effluent limitations guidelines representing the degree of effluent reduction attainable by the application of the best available technology economically achievable.

The following limitations establish the quantity or quality of pollutants or pollutant properties, controlled by this paragraph which may be discharged from the carbon black thermal process by a point source subject to the provisions of this subpart after application of the best available technology economically achievable: There shall be no discharge of process waste water pollutants to navigable waters.

§ 458.24 [Reserved]

§ 458.25 Standards of performance for new sources.

The following standards of performance establish the quantity or quality of pollutants or pollutant properties, controlled by this paragraph, which may be discharged from the carbon black thermal process by a new source subject to the provisions of this subpart: There shall be no discharge of process waste water pollutants to navigable waters.

§ 458.26 Pretreatment standards for new sources.

Any new source subject to this subpart that introduces process wastewater pollutants into a publicly owned treatment works must comply with 40 CFR part 403. In addition, the following pretreatment standard establishes the quantity or quality of pollutants or pollutant properties controlled by this section which may be discharged to a publicly owned treatment works by a new source subject to the provisions of this subpart:

Pollutant or pollutant property-Oil and grease.
Pretreatment standard-100mg/liter.

[60 FR 33972, June 29, 1995]

Subpart C—Carbon Black Channel Process Subcategory

§ 458.30 Applicability; description of the carbon black channel process subcategory.

The provisions of this subpart are applicable to discharges resulting from the production of carbon black by the channel process.

§ 458.31 Specialized definitions.

For the purpose of this subpart:

(a) Except as provided below, the general definitions, abbreviations and methods of analysis set forth in part 401 of this chapter shall apply to this subpart.

(b) The term ''product'' shall mean carbon black manufactured by the channel process.

§ 458.32 Effluent limitations guidelines representing the degree of effluent reduction attainable by the application of the best practicable control technology currently available.

Except as provided in §§ 125.30 through 125.32, any existing point source subject to this subpart, shall achieve the following effluent limitations representing the degree of effluent reduction attainable by the application of the best practicable control technology currently available (BPT): There shall be no discharge of process waste water pollutants into navigable waters.

[60 FR 33972, June 29, 1995]

§ 458.33 Effluent limitations guidelines representing the degree of effluent reduction attainable by the application of the best available technology economically achievable.

The following limitations establish the quantity or quality of pollutants or pollutant properties, controlled by this paragraph, which may be discharged from the carbon black channel process by a point source subject to the provisions of this subpart after application of the best available technology economically achievable: There shall be no discharge of process waste water pollutants to navigable waters.

§ 458.34 [Reserved]

§ 458.35 Standards of performance for new sources.

The following standards of performance establish the quantity or quality of pollutants or pollutant properties, controlled by this paragraph, which may be discharged from the carbon black channel process by a new source subject to the provisions of this subpart: There shall be no discharge of process waste water pollutants to navigable waters.

§ 458.36 Pretreatment standards for new sources.

Any new source subject to this subpart that introduces process wastewater pollutants into a publicly owned treatment works must comply with 40 CFR part 403. In addition, the following pretreatment standard establishes the quantity or quality of pollutants or pollutant properties controlled by this section which may be discharged to a publicly owned treatment works by a new source subject to the provisions of this subpart:

Pollutant or pollutant property-Oil and grease.

Pretreatment standard-100mg/liter.

[60 FR 33972, June 29, 1995]

Subpart D—Carbon Black Lamp Process Subcategory

§ 458.40 Applicability; description of the carbon black lamp process subcategory.

The provisions of this subpart are applicable to discharges resulting from the production of carbon black by the lamp process.

§ 458.41 Specialized definitions.

For the purpose of this subpart:

(a) Except as provided below, the general definitions, abbreviations and methods of analysis set forth in part 401 of this chapter shall apply to this subpart.

(b) The term ''product'' shall mean carbon black manufactured by the lamp process.

§ 458.42 Effluent limitations guidelines representing the degree of effluent reduction attainable by the application of the best practicable control technology currently available.

Except as provided in §§ 125.30 through 125.32, any existing point source subject to this subpart, shall achieve the following effluent limitations representing the degree of effluent reduction attainable by the application of the best practicable control technology currently available (BPT): There shall be no discharge of process waste water pollutants into navigable waters.

[60 FR 33972, June 29, 1995]

§ 458.43 Effluent limitations guidelines representing the degree of effluent reduction attainable by the application of the best available technology economically achievable.

The following limitations establish the quantity or quality of pollutants or pollutant properties, controlled by this paragraph, which may be discharged from the carbon black lamp process by a point source subject to the provisions of this subpart after application of the best available technology economically achievable: There shall be no discharge of process waste water pollutants to navigable waters.

§ 458.44 [Reserved]

§ 458.45 Standards of performance for new sources.

The following standards of performance establish the quantity or quality of pollutants or pollutant properties, controlled by this paragraph, which may be discharged from the carbon black lamp process by a new source subject to the provisions of this subpart: There shall be no discharge of process waste water pollutants to navigable waters.

§ 458.46 Pretreatment standards for new sources.

Any new source subject to this subpart that introduces process wastewater pollutants into a publicly owned treatment works must comply with 40 CFR part 403. In addition, the following pretreatment standard establishes the quantity or quality of pollutants or pollutant properties controlled by this section which may be discharged to a publicly owned treatment works by a new source subject to the provisions of this subpart:

Pollutant or pollutant property-Oil and grease.

Pretreatment standard-100mg/liter.

[60 FR 33972, June 29, 1995]

PART 459—PHOTOGRAPHIC POINT SOURCE CATEGORY

Subpart A—Photographic Processing Subcategory

Sec.

459.10 Applicability; description of the photographic processing subcategory.
459.11 Specialized definitions.
459.12 Effluent limitations guidelines representing the degree of effluent reduction attainable by the application of the best practicable control technology currently available.

AUTHORITY: Secs. 301, 304 (b), (c), 306(b), Federal Water Pollution Control Act, as amended (33 U.S.C. 1251, 1311, 1314 (b) and (c) and 1316(b), 86 Stat. 816 *et seq.;* Pub. L. 92–500) (the Act).

SOURCE: 41 FR 29079, July 14, 1976, unless otherwise noted.

Subpart A—Photographic Processing Subcategory

§ 459.10 Applicability; description of the photographic processing subcategory.

The provisions of this subpart are applicable to point source discharges resulting from the development or printing of paper prints, slides, negatives, enlargements, movie film, and other sensitized materials except that facilities processing 150 sq. meters (1600 sq. feet) per day or less are not covered. Both commercial and military facilities are covered by this subpart.

§ 459.11 Specialized definitions.

For the purpose of this subpart:

(a) Except as provided below, the general definitions, abbreviations and methods of analysis set forth in part 401 of this chapter shall apply to this subpart.

(b) The term ''product'' shall mean articles developed or printed by photographic processes, such as paper prints, slides, negatives, enlargements, movie film and other sensitized materials.

§ 459.12 Effluent limitations guidelines representing the degree of effluent reduction attainable by the application of the best practicable control technology currently available.

In establishing the limitations set forth in this section, EPA took into account all information it was able to collect, develop and solicit with respect to factors (such as age and size of plant, raw materials, manufacturing processes, products produced, treatment technology available energy requirements and costs) which can affect the industry subcategorization and effluent levels established. It is, however, possible that data which would affect these limitations have not been available and, as a result, these limitations should be adjusted for certain plants in this industry. An individual discharger or other interested person may submit evidence to the Regional Administrator (or to the State, if the State has the authority to issue NPDES permits) that factors relating to the equipment of facilities involved, the process applied, or other such factors related to such discharger are fundamentally different from the factors considered in the establishment of the guidelines. On the basis of such evidence or other available information, the Regional Administrator (or the State) will make a written finding that such factors are or are not fundamentally different for that facility compared to those specified in the Development Document. If such fundamentally different factors are found to exist, the Regional Administrator or the State shall establish for the discharger effluent limitations in the NPDES permit either more or less stringent than the limitations established herein, to the extent dictated by such fundamentally different factors. Such limitations must be approved by the Administrator of the Environmental Protection Agency. The Administrator may approve or disapprove such limitations, specify other limitations, or initiate proceedings to revise these regulations.

(a) The following limitations establish the quantity or quality of pollutants or pollutant properties, controlled by this paragraph, which may be discharged from a photographic processing point source subject to the provisions of this paragraph after application of the best practicable control technology currently available:

Effluent characteristic	Effluent limitations	
	Maximum for any 1 day	Average of daily values for 30 consecutive days shall not exceed—
	Metric units (kilograms per 1,000 m^2 of product)	
Ag	0.14	0.07
CN	0.18	0.09
pH	(1)	(1)
	English units (pounds per 1,000 ft^2 of product)	
Ag	0.030	0.015
CN	0.038	0.019
pH	(1)	(1)

[1] Within the range 6.0 to 9.0.

PART 460—HOSPITAL POINT SOURCE CATEGORY

Subpart A—Hospital Category

Sec.

460.10 Applicability; description of the hospital category.
460.11 Specialized definitions.
460.12 Effluent limitations and guidelines representing the degree of effluent reduction attainable by the application of the best practicable control technology currently available.

AUTHORITY: Secs. 301, 304 (b) and (c), 360(b), 307 (b) and (c), Federal Water Pollution Control Act, as amended (33 U.S.C. 1251, 1311, 1314 (b) and (c), 1316(b) and 1317 (b) and (c), 86 Stat. 816 *et seq.;* Pub. L. 92–500) (the Act).

SOURCE: 41 FR 18777, May 6, 1976, unless otherwise noted.

Subpart A—Hospital Category

§ 460.10 Applicability; description of the hospital category.

The provisions of this subpart are applicable to discharges resulting from the functional operations of the hospital point source category.

§ 460.11 Specialized definitions.

For the purpose of this subpart:

(a) Except as provided below, the general definitions, abbreviations and methods of analysis set forth in part 401 of this chapter shall apply to this subpart.

(b) The term ''product'' shall mean service resulting from the hospital activity in terms of 1,000 occupied beds.

§ 460.12 Effluent limitations and guidelines representing the degree of effluent reduction attainable by the application of the best practicable control technology currently available.

Except as provided in §§ 125.30 through 125.32, any existing point source subject to this subpart, shall achieve the following effluent limitations representing the degree of effluent reduction attainable by the application of the best practicable control technology currently available (BPT):

(a) The following limitations establish the quantity or quality of pollutants or pollutant properties, controlled by this paragraph, which may be discharged from the hospital point source subject to the provisions of this paragraph after application of the best practicable control technology currently available:

Effluent characteristic	Effluent limitations	
	Maximum for any 1 day	Average of daily values for 30 consecutive days shall not exceed—
	Metric units (kg/1,000 occupied beds)	
BOD5	41.0	33.6
TSS	55.6	33.8
pH	(1)	(1)
	English units (lb/1,000 occupied beds)	
BOD5	90.4	74.0
TSS	122.4	74.5
pH	(1)	(1)

[1] Within the range 6.0 to 9.0.

[41 FR 18777, May 6, 1976, as amended at 60 FR 33972, June 29, 1995]

PART 461—BATTERY MANUFACTURING POINT SOURCE CATEGORY

GENERAL PROVISIONS

Sec.
461.1 Applicability.
461.2 General definitions.
461.3 Monitoring and reporting requirements.
461.4 Compliance date for PSES.

Subpart A—Cadmium Subcategory

461.10 Applicability; description of the cadmium subcategory.
461.11 Effluent limitations representing the degree of effluent reduction attainable by the application of the best practicable control technology currently available (BPT).
461.12 Effluent limitations representing the degree of effluent reduction attainable by the application of the best available technology economically achievable (BAT).
461.13 New source performance standards (NSPS).
461.14 Pretreatment standards for existing sources (PSES).
461.15 Pretreatment standards for new sources (PSNS).

Subpart B—Calcium Subcategory

461.20 Applicability; description of the calcium subcategory.
461.21–461.22 [Reserved]
461.23 New source performance standards (NSPS).
461.24 [Reserved]
461.25 Pretreatment standards for new sources (PSNS).

Subpart C—Lead Subcategory

461.30 Applicability; description of the lead subcategory.
461.31 Effluent limitations representing the degree of effluent reduction attainable by the application of the best practicable control technology currently available (BPT).
461.32 Effluent limitations representing the degree of effluent reduction attainable by the application of the best available technology economically achievable (BAT).
461.33 New source performance standards (NSPS).
461.34 Pretreatment standards for existing sources (PSES).
461.35 Pretreatment standards for new sources (PSNS).

Subpart D—Leclanche Subcategory

461.40 Applicability; description of the Leclanche subcategory.
461.41–461.42 [Reserved]
461.43 New source performance standards (NSPS).
461.44 Pretreatment standards for existing sources (PSES).
461.45 Pretreatment standards for new sources (PSNS).

Subpart E—Lithium Subcategory

461.50 Applicability; description of the lithium subcategory.
461.51–461.52 [Reserved]
461.53 New source performance standards (NSPS).
461.54 [Reserved]
461.55 Pretreatment standards for new sources (PSNS).

Subpart F—Magnesium Subcategory

461.60 Applicability; description of the magnesium subcategory.
461.61–461.62 [Reserved]
461.63 New source performance standards (NSPS).
461.64 Pretreatment standards for existing sources (PSES).
461.65 Pretreatment standards for new sources (PSNS).

Subpart G—Zinc Subcategory

461.70 Applicability; description of the zinc subcategory.
461.71 Effluent limitations representing the degree of effluent reduction attainable by the application of the best practicable control technology currently available (BPT).
461.72 Effluent limitations representing the degree of effluent reduction attainable by the application of the best available technology economically achievable (BAT).
461.73 New source performance standards (NSPS).
461.74 Pretreatment standards for existing sources (PSES).
461.75 Pretreatment standards for new sources (PSNS).

AUTHORITY: Secs. 301, 304 (b), (c), (e), and (g), 306 (b) and (c), 307 (b) and (c), 308 and 501 of the Clean Water Act (the Federal Water Pollution Control Act Amendments of 1972, as amended by the Clean Water Act of 1977) (the ''Act''); 33 U.S.C. 1311, 1314 (b), (c), (e), and (g), 1316 (b) and (c), 1317 (b) and (c), and 1361; 86 Stat. 816, Pub. L. 92–500; 91 Stat. 1567, Pub. L. 95–217.

SOURCE: 49 FR 9134, Mar. 9, 1984, unless otherwise noted.

GENERAL PROVISIONS

§461.1 Applicability.

This part applies to any battery manufacturing plant that discharges or may discharge a pollutant to waters of the United States or that introduces pollutants to a publicly owned treatment works. Battery manufacturing operations subject to regulation under this part shall not be subject to regulation under part 413 or 433.

§461.2 General definitions.

In addition to the definitions set forth in 40 CFR part 401, the following definitions apply to this part:

(a) ''Battery'' means a modular electric power source where part or all of the fuel is contained within the unit and electric power is generated directly from a chemical reaction rather than indirectly through a heat cycle engine. In this regulation there is no differentiation between a single cell and a battery.

(b) ''Battery manufacturing operations'' means all of the specific processes used to produce a battery including the manufacture of anodes and cathodes and associated ancillary operations. These manufacturing operations are excluded from regulation under any other point source category.

(c) ''Ancillary operations'' means all of the operations specific to battery manufacturing and not included specifically within anode or cathode manufacture (ancillary operations are primarily associated with battery assembly and chemical production of anode or cathode active materials).

(d) ''Plate soak'' shall mean the process operation of soaking or reacting lead subcategory battery plates, that are more than 2.5 mm (0.100 in) thick, in sulfuric acid.

(e) ''Discharge allowance'' means the amount of pollutant (mg per kg of production unit) that a plant will be permitted to discharge. For this category the allowances are specific to battery manufacturing operations.

(f) ''Miscellaneous wastewater streams'' shall mean the combined wastewater streams from the process operations listed below for each subcategory. If a plant has one of these

streams then the plant receives the entire miscellaneous waste stream allowance.

(1) *Cadmium subcategory*. Cell wash, electrolyte preparation, floor and equipment wash, and employee wash.

(2) *Lead subcategory*. Floor wash, wet air pollution control, battery repair, laboratory, hand wash, and respirator wash.

(3) *Lithium subcategory*. Floor and equipment wash, cell testing, and lithium scrap disposal.

(4) *Zinc subcategory*. Cell wash, electrolyte preparation, employee wash, reject cell handling, floor and equipment wash.

(g) ''Trucked batteries'' shall mean batteries moved into or out of the plant by truck when the truck is actually washed in the plant to remove residues left in the truck from the batteries.

§ 461.3 Monitoring and reporting requirements.

The ''monthly average'' regulatory values shall be the basis for the monthly average discharge in direct discharge permits and for pretreatment standards. Compliance with the monthly discharge limit is required regardless of the number of samples analyzed and averaged.

§ 461.4 Compliance date for PSES.

The compliance date for pretreatment standards for existing sources is March 9, 1987.

Subpart A—Cadmium Subcategory

§ 461.10 Applicability; description of the cadmium subcategory.

This subpart applies to discharges to waters of the United States, and introductions of pollutants into publicly owned treatment works from the manufacturing of cadmium anode batteries.

§ 461.11 Effluent limitations representing the degree of effluent reduction attainable by the application of the best practicable control technology currently available (BPT).

(a) Except as provided in 40 CFR 125.30 through 125.32, any existing point source subject to this subpart must achieve the following effluent limitations representing the degree of effluent reduction attainable by the application of the best practicable control technology currently available:

(1) Subpart A—Pasted and Pressed Powder Anodes.

BPT EFFLUENT LIMITATIONS

Pollutant or pollutant property	Maximum for any 1 day	Maximum for monthly average
	Metric units—mg/kg of cadmium English units—pounds per 1,000,000 pounds of cadmium	
Cadmium	0.92	0.41
Nickel	5.18	3.43
Zinc	3.94	1.65
Cobalt	0.57	0.24
Oil and grease	54.00	32.40
TSS	111.00	52.65
pH	(1)	(1)

[1] Within the range of 7.5 to 10.0 at all times.

(2) Subpart A—Electrodeposited Anodes.

BPT EFFLUENT LIMITATIONS

Pollutant or pollutant property	Maximum for any 1 day	Maximum for monthly average
	Metric units—mg/kg of cadmium English units—pounds per 1,000,000 pounds of cadmium	
Cadmium	237.0	104.6
Nickel	1,338.2	885.2
Zinc	1,017.6	425.2
Cobalt	146.4	62.7
Oil and grease	13,940.0	8,364.0
TSS	28,577.0	13,592.0
pH	(1)	(1)

[1] Within the range of 7.5 to 10.0 at all times.

(3) Subpart A—Impregnated Anodes.

BPT EFFLUENT LIMITATIONS

Pollutant or pollutant property	Maximum for any 1 day	Maximum for monthly average
	Metric units—mg/kg of cadmium English units—pounds per 1,000,000 pounds of cadmium	
Cadmium	339.3	149.7
Nickel	1,916.2	1,267.5
Zinc	1,457.1	608.8
Cobalt	209.6	89.8
Oil and grease	19,960.0	11,976.0
TSS	40,918.0	19,461.0
pH	(1)	(1)

[1] Within the range of 7.5 to 10.0 at all times.

(4) Subpart A—Nickel Electrodeposited Cathodes.

BPT EFFLUENT LIMITATIONS

Pollutant or pollutant property	Maximum for any 1 day	Maximum for monthly average
	Metric units—mg/kg of nickel applied English units—pounds per 1,000,000 pounds of nickel applied	
Cadmium	193.5	85.4
Nickel	1,092.5	722.6
Zinc	830.7	347.1
Cobalt	119.5	51.2
Oil and grease	11,380.0	6,828.0
TSS	23,329.0	11,095.5
pH	(1)	(1)

[1] Within the range of 7.5 to 10.0 at all times.

(5) Subpart A—Nickel Impregnated Cathodes.

BPT EFFLUENT LIMITATIONS

Pollutant or pollutant property	Maximum for any 1 day	Maximum for monthly average
	Metric units—mg/kg of nickel applied English units—pounds per 1,000,000 pounds of nickel applied	
Cadmium	557.6	246.0
Nickel	3,148.8	2,082.8
Zinc	2,394.4	1,000.4
Cobalt	344.4	147.6
Oil and grease	32,800.0	19,680.0
TSS	67,240.0	31,980.0
pH	(1)	(1)

[1] Within the range of 7.5 to 10.0 at all times.

(6) Subpart A—Miscellaneous Wastewater Streams.

BPT EFFLUENT LIMITATIONS

Pollutant or pollutant property	Maximum for any 1 day	Maximum for monthly average
	Metric units—mg/kg of cells produced English units—pounds per 1,000,000 pounds of cells produced	
Cadmium	6.29	2.77
Nickel	35.54	23.50
Zinc	27.02	11.29
Cobalt	3.89	1.66
Oil and grease	370.20	222.12
TSS	758.91	360.94
pH	(1)	(1)

[1] Within the range of 7.5 to 10.0 at all times.

(7) Subpart A—Cadmium Powder Production.

BPT EFFLUENT LIMITATIONS

Pollutant or pollutant property	Maximum for any 1 day	Maximum for monthly average
	Metric units—mg/kg of cadmium powder produced English units—pounds per 1,000,000 pounds of cadmium powder produced	
Cadmium	22.34	9.86
Nickel	126.14	83.44
Zinc	95.92	40.08
Cobalt	13.80	5.91
Oil and grease	1,314.00	788.40
TSS	2,693.00	1,281.20
pH	(1)	(1)

[1] Within the range of 7.5 to 10.0 at all times.

(8) Subpart A—Silver Powder Production.

BPT EFFLUENT LIMITATIONS

Pollutant or pollutant property	Maximum for any 1 day	Maximum for monthly average
	Metric units—mg/kg of silver powder produced English units—pounds per 1,000,000 pounds of silver powder produced	
Cadmium	7.21	3.18
Nickel	40.70	26.92
Silver	8.69	3.61
Zinc	30.95	12.93
Cobalt	4.45	1.91
Oil and grease	424.00	254.40
TSS	869.20	413.40
pH	(1)	(1)

[1] Within the range of 7.5 to 10.0 at all times.

(9) Subpart A—Cadmium Hydroxide Production.

BPT EFFLUENT LIMITATIONS

Pollutant or pollutant property	Maximum for any 1 day	Maximum for monthly average
	Metric units—mg/kg of cadmium used English units—pounds per 1,000,000 pounds of cadmium used	
Cadmium	0.31	0.14
Nickel	1.73	1.14
Zinc	1.31	0.55
Cobalt	0.19	0.08
Oil and grease	18.00	10.80
TSS	36.90	17.60
pH	(1)	(1)

[1] Within the range of 7.5 to 10.0 at all times.

(10) Subpart A—Nickel Hydroxide Production.

BPT EFFLUENT LIMITATIONS

Pollutant or pollutant property	Maximum for any 1 day	Maximum for monthly average
	Metric units—mg/kg of nickel used English units—pounds per 1,000,000 pounds of nickel used	
Cadmium	37.4	16.5
Nickel	211.2	139.7
Zinc	160.6	67.1
Cobalt	23.1	9.9
Oil and grease	2,200.0	1,320.0
TSS	4,510.0	2,145.0
pH	(1)	(1)

[1] Within the range of 7.5 to 10.0 at all times.

(b) There shall be no discharge allowance for process wastewater pollutants from any battery manufacturing operation other than those battery manufacturing operations listed above.

§ 461.12 Effluent limitations representing the degree of effluent reduction attainable by the application of the best available technology economically achievable (BAT).

(a) Except as provided in 40 CFR 125.30 through 125.32, any existing point source subject to this subpart must achieve the following effluent limitations representing the degree of effluent reduction attainable by the application of the best available technology economically achievable:

(1) Subpart A—Electrodeposited Anodes.

BAT EFFLUENT LIMITATIONS

Pollutant or pollutant property	Maximum for any 1 day	Maximum for monthly average
	Metric units—mg/kg of cadmium English units—pounds per 1,000,000 pounds of cadmium	
Cadmium	11.95	5.27
Nickel	67.49	44.64
Zinc	51.32	21.44
Cobalt	7.38	3.16

(2) Subpart A—Impregnated Anodes.

BAT EFFLUENT LIMITATIONS

Pollutant or pollutant property	Maximum for any 1 day	Maximum for monthly average
	Metric units—mg/kg of cadmium English units—pounds per 1,000,000 pounds of cadmium	
Cadmium	68.0	30.0
Nickel	384.0	254.0
Zinc	292.0	122.0
Cobalt	42.0	18.0

(3) Subpart A—Nickel Electrodeposited Cathodes.

BAT EFFLUENT LIMITATIONS

Pollutant or pollutant property	Maximum for any 1 day	Maximum for monthly average
	Metric units—mg/kg of nickel applied English units—pounds per 1,000,000 pounds of nickel applied	
Cadmium	11.22	4.95
Nickel	63.36	41.91
Zinc	48.18	20.13
Cobalt	6.93	2.97

(4) Subpart A—Nickel Impregnated Cathodes.

BAT EFFLUENT LIMITATIONS

Pollutant or pollutant property	Maximum for any 1 day	Maximum for monthly average
	Metric units—mg/kg of nickel applied English units—pounds per 1,000,000 pounds of nickel applied	
Cadmium	68.0	30.0
Nickel	384.0	254.0
Zinc	292.0	122.0
Cobalt	42.0	18.0

(5) Subpart A—Miscellaneous Wastewater Streams.

BAT EFFLUENT LIMITATIONS

Pollutant or pollutant property	Maximum for any 1 day	Maximum for monthly average
	Metric units—mg/kg of cells produced English units—pounds per 1,000,000 pounds of cells produced	
Cadmium	0.79	0.35
Nickel	4.47	2.96
Zinc	3.40	1.42
Cobalt	0.49	0.21

(6) Subpart A—Cadmium Powder Production.

BAT EFFLUENT LIMITATIONS

Pollutant or pollutant property	Maximum for any 1 day	Maximum for monthly average
	Metric units—mg/kg of cadmium powder produced English units—pounds per 1,000,000 pounds of cadmium powder produced	
Cadmium	2.23	0.99
Nickel	12.61	8.34
Zinc	9.59	4.01
Cobalt	1.38	0.59

(7) Subpart A—Silver Powder Production.

BAT EFFLUENT LIMITATIONS

Pollutant or pollutant property	Maximum for any 1 day	Maximum for monthly average
	Metric units—mg/kg of silver powder produced English units—pounds per 1,000,000 pounds of silver powder produced	
Cadmium	1.09	0.48
Nickel	6.16	4.08
Silver	1.32	0.55
Zinc	4.69	1.96
Cobalt	0.67	0.29

(8) Subpart A—Cadmium Hydroxide Production.

BAT EFFLUENT LIMITATIONS

Pollutant or pollutant property	Maximum for any 1 day	Maximum for monthly average
	Metric units—mg/kg of cadmium used English units—pounds per 1,000,000 pounds of cadmium used	
Cadmium	0.05	0.02
Nickel	0.27	0.18
Zinc	0.20	0.09
Cobalt	0.03	0.01

(9) Subpart A—Nickel Hydroxide Production.

BAT EFFLUENT LIMITATIONS

Pollutant or pollutant property	Maximum for any 1 day	Maximum for monthly average
	Metric units—mg/kg of nickel used English units—pounds per 1,000,000 pounds of nickel used	
Cadmium	5.61	2.48
Nickel	31.68	20.96
Zinc	24.09	10.07
Cobalt	3.47	1.49

(b) There shall be no discharge allowance for process wastewater pollutants from any battery manufacturing operation other than those battery manufacturing operations listed above.

§ 461.13 New source performance standards (NSPS).

(a) The discharge of wastewater pollutants from any new source subject to

this subpart shall not exceed the standards set forth below:

(1) Subpart A—Electrodeposited Anodes—NSPS.

Pollutant or pollutant property	Maximum for any 1 day	Maximum for monthly average
	Metric units—mg/kg of cadmium English units—pounds per 1,000,000 pounds of cadmium	
Cadmium	7.03	2.81
Nickel	19.33	13.01
Zinc	35.85	14.76
Cobalt	4.92	2.46
Oil and grease	351.5	351.5
TSS	527.3	421.8
pH	(1)	(1)

[1] Within the range of 7.5–10.0 at all times.

(2) Subpart A—Impregnated Anodes—NSPS.

Pollutant or pollutant property	Maximum for any 1 day	Maximum for monthly average
	Metric units—mg/kg of cadmium English units—pounds per 1,000,000 pounds of cadmium	
Cadmium	40.0	16.0
Nickel	110.0	74.0
Zinc	204.0	84.0
Cobalt	28.0	14.0
Oil and grease	2,000.0	2,000.0
TSS	3,000.0	2,400.0
pH	(1)	(1)

[1] Within the range of 7.5–10.0 at all times.

(3) Subpart A—Nickel Electrodeposited Cathodes—NSPS.

Pollutant or pollutant property	Maximum for any 1 day	Maximum for monthly average
	Metric units—mg/kg of nickel applied English units—pounds per 1,000,000 pounds of nickel applied	
Cadmium	6.60	2.64
Nickel	18.15	12.21
Zinc	33.66	13.86
Cobalt	4.62	2.31
Oil and grease	330.0	330.0
TSS	495.0	396.0
pH	(1)	(1)

[1] Within the range of 7.5–10.0 at all times.

(4) Subpart A—Nickel Impregnated Cathodes—NSPS.

Pollutant or pollutant property	Maximum for any 1 day	Maximum for monthly average
	Metric units—mg/kg of nickel applied English units—pounds per 1,000,000 pounds of nickel applied	
Cadmium	40.0	16.0
Nickel	110.0	74.0
Zinc	204.0	84.0
Cobalt	28.0	14.0
Oil and grease	2,000.0	2,000.0
TSS	3,000.0	2,400.0
pH	(1)	(1)

[1] Within the range of 7.5–10.0 at all times.

(5) Subpart A—Miscellaneous Wastewater Streams—NSPS.

Pollutant or pollutant property	Maximum for any 1 day	Maximum for monthly average
	Metric units—mg/kg of cells produced English units—pounds per 1,000,000 pounds of cells produced	
Cadmium	0.47	0.19
Nickel	1.28	0.86
Zinc	2.38	0.98
Cobalt	0.33	0.16
Oil and grease	23.3	23.3
TSS	35.0	28.0
pH	(1)	(1)

[1] Within the range of 7.5–10.0 at all times.

(6) Subpart A—Cadmium Powder Production—NSPS.

Pollutant or pollutant property	Maximum for any 1 day	Maximum for monthly average
	Metric units—mg/kg of cadmium powder produced English units—pounds per 1,000,000 pounds of cadmium powder produced	
Cadmium	1.31	0.53
Nickel	3.61	2.43
Zinc	6.70	2.76
Cobalt	0.92	0.46
Oil and grease	65.70	65.70
TSS	98.55	78.84
pH	(1)	(1)

[1] Within the range of 7.5–10.0 at all times.

(7) Subpart A—Silver Powder Production—NSPS.

Pollutant or pollutant property	Maximum for any 1 day	Maximum for monthly average
	Metric units—mg/kg of silver powder produced English units—pounds per 1,000,000 pounds of silver powder produced	
Cadmium	0.64	0.26
Nickel	1.77	1.19
Silver	0.93	0.39
Zinc	3.27	1.35
Cobalt	0.45	0.22
Oil and grease	32.10	32.10
TSS	48.15	38.52
pH	(1)	(1)

[1] Within the range of 7.5–10.0 at all times.

(8) Subpart A—Cadmium Hydroxide Production—NSPS.

Pollutant or pollutant property	Maximum for any 1 day	Maximum for monthly average
	Metric units—mg/kg of cadmium used English units—pounds per 1,000,000 pounds of cadmium used	
Cadmium	0.028	0.011
Nickel	0.077	0.051
Zinc	0.142	0.058
Cobalt	0.019	0.009
Oil and grease	1.40	1.40
TSS	2.10	1.68
pH	(1)	(1)

[1] Within the range of 7.5–10.0 at all times.

(9) Subpart A—Nickel Hydroxide Production—NSPS.

Pollutant or pollutant property	Maximum for any 1 day	Maximum for monthly average
	Metric units—mg/kg of nickel used English units—pounds per 1,000,000 pounds of nickel used	
Cadmium	3.30	1.32
Nickel	9.08	6.11
Zinc	16.83	6.93
Cobalt	2.31	1.16
Oil and grease	165.0	165.0
TSS	247.5	198.0
pH	(1)	(1)

[1] Within the range of 7.5–10.0 at all times.

(b) There shall be no discharge allowance for process wastewater pollutants from any battery manufacturing operation other than those battery manufacturing operations listed above.

[49 FR 9134, Mar. 9, 1984; 49 FR 13879, Apr. 9, 1984]

§ 461.14 Pretreatment standards for existing sources (PSES).

(a) Except as provided in 40 CFR 403.7 and § 403.13, any existing source subject to this subpart which introduces pollutants into a publicly owned treatment works must comply with 40 CFR part 403 and achieve the pretreatment standards for existing sources listed below:

(1) Subpart A—Electrodeposited Anodes.

PSES

Pollutant or pollutant property	Maximum for any 1 day	Maximum for monthly average
	Metric units—mg/kg of cadmium English units—pounds per 1,000,000 pounds of cadmium	
Cadmium	11.95	5.27
Nickel	67.49	44.64
Zinc	51.32	21.44
Cobalt	7.38	3.16

(2) Subpart A—Impregnated Anodes.

PSES

Pollutant or pollutant property	Maximum for any 1 day	Maximum for monthly average
	Metric units—mg/kg of cadmium English units—pounds per 1,000,000 pounds of cadmium	
Cadmium	68.0	30.0
Nickel	384.0	254.0
Zinc	292.0	122.0
Cobalt	42.0	18.0

(3) Subpart A—Nickel Electrodeposited Cathodes.

PSES

Pollutant or pollutant property	Maximum for any 1 day	Maximum for monthly average
	Metric units—mg/kg of nickel applied English units—pounds per 1,000,000 pounds of nickel applied	
Cadmium	11.22	4.95
Nickel	63.36	41.91
Zinc	48.18	20.13
Cobalt	6.93	2.97

(4) Subpart A—Nickel Impregnated Cathodes—PSES.

Pollutant or pollutant property	Maximum for any 1 day	Maximum for monthly average
	Metric units—mg/kg of nickel applied	
	English units—pounds per 1,000,000 pounds of nickel applied	
Cadmium	68.0	30.0
Nickel	384.0	254.0
Zinc	292.0	122.0
Cobalt	42.0	18.0

(5) Subpart A—Miscellaneous Wastewater Streams—PSES.

Pollutant or pollutant property	Maximum for any 1 day	Maximum for monthly average
	Metric units—mg/kg of cells produced	
	English units—pounds per 1,000,000 pounds of cells produced	
Cadmium	0.79	0.35
Nickel	4.47	2.96
Zinc	3.40	1.42
Cobalt	0.49	0.21

(6) Subpart A—Cadmium Powder Production—PSES.

Pollutant or pollutant property	Maximum for any 1 day	Maximum for monthly average
	Metric units—mg/kg of cadmium powder produced	
	English units—pounds per 1,000,000 pounds of cadmium powder produced	
Cadmium	2.23	0.99
Nickel	12.61	8.34
Zinc	9.59	4.01
Cobalt	1.38	0.59

(7) Subpart A—Silver Powder Production—PSES.

Pollutant or pollutant property	Maximum for any 1 day	Maximum for monthly average
	Metric units—mg/kg of silver powder produced	
	English units—pounds per 1,000,000 pounds of silver powder produced	
Cadmium	1.09	0.48
Nickel	6.16	4.08
Silver	1.32	0.55
Zinc	4.69	1.96
Cobalt	0.67	0.29

(8) Subpart A—Cadmium Hydroxide Production—PSES.

Pollutant or pollutant property	Maximum for any 1 day	Maximum for monthly average
	Metric units—mg/kg of cadmium used	
	English units—pounds per 1,000,000 pounds of cadmium used	
Cadmium	0.05	0.02
Nickel	0.27	0.18
Zinc	0.20	0.09
Cobalt	0.03	0.012

(9) Subpart A—Nickel Hydroxide Production—PSES.

Pollutant or pollutant property	Maximum for any 1 day	Maximum for monthly average
	Metric units—mg/kg of nickel used	
	English units—pounds per 1,000,000 pounds of nickel used	
Cadmium	5.61	2.48
Nickel	31.68	20.96
Zinc	24.09	10.07
Cobalt	3.47	1.49

(b) There shall be no discharge allowance for process wastewater pollutants from any battery manufacturing operation other than those battery manufacturing operations listed above.

§ 461.15 Pretreatment standards for new sources (PSNS).

(a) Except as provided in 40 CFR 403.7 any new source subject to this subpart that introduces pollutants into a publicly owned treatment works must comply with 40 CFR part 403 and achieve the pretreatment standards for new sources listed below:

(1) Subpart A—Electrodeposited Anodes—PSNS.

Pollutant or pollutant property	Maximum for any 1 day	Maximum for monthly average
	Metric units—mg/kg of cadmium English units—pounds per 1,000,000 pounds of cadmium	
Cadmium	7.03	2.81
Nickel	19.33	13.01
Zinc	35.85	14.76
Cobalt	4.92	2.46

(2) Subpart A—Impregnated Anodes—PSNS.

Pollutant or pollutant property	Maximum for any 1 day	Maximum for monthly average
	Metric units—mg/kg of cadmium English units—pounds per 1,000,000 pounds of cadmium	
Cadmium	40.0	16.0
Nickel	110.0	74.0
Zinc	204.0	84.0
Cobalt	28.0	14.0

(3) Subpart A—Nickel Electrodeposited Cathodes—PSNS.

Pollutant or pollutant property	Maximum for any 1 day	Maximum for monthly average
	Metric units—mg/kg of nickel applied English units—pounds per 1,000,000 pounds of nickel applied	
Cadmium	6.60	2.64
Nickel	18.15	12.21
Zinc	33.66	13.86
Cobalt	4.62	2.31

(4) Subpart A—Nickel Impregnated Cathodes—PSNS.

Pollutant or pollutant property	Maximum for any 1 day	Maximum for monthly average
	Metric units—mg/kg of nickel applied English units—pounds per 1,000,000 pounds of nickel applied	
Cadmium	40.0	16.0
Nickel	110.0	74.0
Zinc	204.0	84.0
Cobalt	28.0	14.0

(5) Subpart A—Miscellaneous Wastewater Streams—PSNS.

Pollutant or pollutant property	Maximum for any 1 day	Maximum for monthly average
	Metric units—mg/kg of cells produced English units—pounds per 1,000,000 pounds of cells produced	
Cadmium	0.47	0.19
Nickel	1.28	0.86
Zinc	2.38	0.98
Cobalt	0.33	0.16

(6) Subpart A—Cadmium Powder Production—PSNS.

Pollutant or pollutant property	Maximum for any 1 day	Maximum for monthly average.
	Metric units—mg/kg of cadmium powder produced English units—pounds per 1,000,000 pounds of cadmium powder produced	
Cadmium	1.31	0.53
Nickel	3.61	2.43
Zinc	6.70	2.76
Cobalt	0.92	0.46

(7) Subpart A—Silver Powder Production—PSNS.

Pollutant or pollutant property	Maximum for any 1 day	Maximum for monthly average.
	Metric units—mg/kg of silver powder produced English units—pounds per 1,000,000 pounds of silver powder produced	
Cadmium	0.64	0.26
Nickel	1.77	1.19
Silver	0.93	0.39
Zinc	3.27	1.35
Cobalt	0.45	0.22

(8) Subpart A—Cadmium Hydroxide Production—PSNS.

Pollutant or pollutant property	Maximum for any 1 day	Maximum for monthly average
	Metric units—mg/kg of cadmium used English units—pounds per 1,000,000 pounds of cadmium used	
Cadmium	0.028	0.011
Nickel	0.077	0.051
Zinc	0.142	0.058
Cobalt	0.019	0.009

(9) Subpart A—Nickel Hydroxide Production—PSNS.

Pollutant or pollutant property	Maximum for any 1 day	Maximum for monthly average
	Metric units—mg/kg of nickel used English units—pounds per 1,000,000 pounds of nickel used	
Cadmium	3.30	1.32
Nickel	9.08	6.11
Zinc	16.83	6.93
Cobalt	2.31	1.16

(b) There shall be no discharge allowance for process wastewater pollutants from any battery manufacturing operation other than those battery manufacturing operations listed above.

Subpart B—Calcium Subcategory

§ 461.20 Applicability; description of the calcium subcategory.

This subpart applies to discharges to waters of the United States and introductions of pollutants into publicly owned treatment works from manufacturing calcium anode batteries.

§§ 461.21–461.22 [Reserved]

§ 461.23 New source performance standards (NSPS).

(a) The discharge of wastewater pollutants from any new source subject to this subpart shall not exceed the standards set forth below.

(b) There shall be no discharge for process wastewater pollutants from any battery manufacturing operations.

§ 461.24 [Reserved]

§ 461.25 Pretreatment standards for new sources (PSNS).

(a) Except as provided in § 403.7 any new source subject to this subpart that introduces pollutants into a publicly owned treatment works must comply with 40 CFR part 403 and achieve the pretreatment standards for new sources listed below.

(b) There shall be no discharge for process wastewater pollutants from any battery manufacturing operations.

Subpart C—Lead Subcategory

§ 461.30 Applicability; description of the lead subcategory.

This subpart applies to discharges to waters of the United States and introduction of pollutants into publicly owned treatment works from the manufacturing of lead anode batteries.

§ 461.31 Effluent limitations representing the degree of effluent reduction attainable by the application of the best practicable control technology currently available (BPT).

(a) Except as provided in 40 CFR 125.30 through 125.32, any existing point source subject to this subpart must achieve the following effluent limitations representing the degree of effluent reduction attainable by the application of the best practicable control technology currently available:

(1) Subpart C—Closed Formation—Double Fill, or Fill and Dump.

BPT EFFLUENT LIMITATIONS

Pollutant or pollutant property	Maximum for any 1 day	Maximum for monthly average
	Metric units—mg/kg of lead used English units—pounds per 1,000,000 pounds of lead used	
Copper	0.86	0.45
Lead	0.19	0.090
Iron	0.54	0.27
Oil and grease	9.00	5.40
TSS	18.45	8.78
pH	(1)	(1)

[1] Within the range of 7.5 to 10.0 at all times.

(2) Subpart C—Open Formation—Dehydrated.

BPT EFFLUENT LIMITATIONS

Pollutant or pollutant property	Maximum for any 1 day	Maximum for monthly average
	Metric units—mg/kg of lead used English units—pounds per 1,000,000 pounds of lead used	
Copper	20.99	11.05
Lead	4.64	2.21
Iron	16.13	6.74
Oil and grease	221.00	132.60
TSS	453.05	215.47
pH	(1)	(1)

[1] Within the range of 7.5 to 10.0 at all times.

(3) Subpart C—Open Formation—Wet.

BPT EFFLUENT LIMITATIONS

Pollutant or pollutant property	Maximum for any 1 day	Maximum for monthly average
	Metric units—mg/kg of lead used English units—pounds per 1,000,000 pounds of lead used	
Copper	0.10	0.05
Lead	0.02	0.01
Iron	0.06	0.03
Oil and grease	1.06	0.64
TSS	2.17	1.03
pH	(1)	(1)

[1] Within the range of 7.5 to 10.0 at all times.

(4) Subpart C—Plate Soak.

BPT EFFLUENT LIMITATIONS

Pollutant or pollutant property	Maximum for any 1 day	Maximum for monthly average
	Metric units—mg/kg of lead used English units—pounds per 1,000,000 pounds of lead used	
Copper	0.040	0.020
Lead	0.009	0.004
Iron	0.030	0.010
Oil and grease	0.420	0.250
TSS	0.860	0.410
pH	(1)	(1)

[1] Within the range of 7.5 to 10.0 at all times.

(5) Subpart C—Battery Wash (with Detergent).

BPT EFFLUENT LIMITATIONS

Pollutant or pollutant property	Maximum for any 1 day	Maximum for monthly average
	Metric units—mg/kg of lead used English units—pounds per 1,000,000 pounds of lead used	
Copper	1.71	0.90
Lead	0.38	0.18
Iron	1.08	0.55
Oil and grease	18.00	10.80
TSS	36.90	17.55
pH	(1)	(1)

[1] Within the range of 7.5 to 10.0 at all times.

(6) Subpart C—Battery Wash (Water Only).

BPT EFFLUENT LIMITATIONS

Pollutant or pollutant property	Maximum for any 1 day	Maximum for monthly average
	Metric units—mg/kg of lead used English units—pounds per 1,000,000 pounds of lead used	
Copper	1.12	0.59
Lead	0.25	0.12
Iron	0.71	0.36
Oil and grease	11.80	7.08
TSS	24.19	11.51
pH	(1)	(1)

[1] Within the range of 7.5 to 10.0 at all times.

(7) Subpart C—Direct Chill Lead Casting.

BPT EFFLUENT LIMITATIONS

Pollutant or pollutant property	Maximum for any 1 day	Maximum for monthly average
	Metric units—mg/kg of lead used English units—pounds per 1,000,000 pounds of lead used	
Copper	0.00040	0.00020
Lead	0.00008	0.00004
Iron	0.00020	0.00010
Oil and grease	0.00400	0.00200
TSS	0.00800	0.00300
pH	(1)	(1)

[1] Within the range of 7.5 to 10.0 at all times.

(8) Subpart C—Mold Release Formulation.

BPT EFFLUENT LIMITATIONS

Pollutant or pollutant property	Maximum for any 1 day	Maximum for monthly average
	Metric units—mg/kg of lead used English units—pounds per 1,000,000 pounds of lead used	
Copper	0.011	0.006
Lead	0.002	0.001
Iron	0.007	0.004
Oil and grease	0.120	0.072
TSS	0.246	0.117
pH	(1)	(1)

[1] Within the range of 7.5 to 10.0 at all times.

(9) Subpart C—Truck Wash.

BPT EFFLUENT LIMITATIONS

Pollutant or pollutant property	Maximum for any 1 day	Maximum for monthly average
	Metric units—mg/kg of lead in trucked batteries English units—pounds per 1,000,000 pounds of lead in trucked batteries	
Copper	0.026	0.014
Lead	0.005	0.002
Iron	0.016	0.008
Oil and grease	0.280	0.168
TSS	0.574	0.273
pH	(1)	(1)

[1] Within the range of 7.5 to 10.0 at all times.

(10) Subpart C—Laundry.

BPT EFFLUENT LIMITATIONS

Pollutant or pollutant property	Maximum for any 1 day	Maximum for monthly average
	Metric units—mg/kg of lead used English units—pounds per 1,000,000 pounds of lead used	
Copper	0.21	0.11
Lead	0.05	0.02
Iron	0.13	0.07
Oil and grease	2.18	1.31
TSS	4.47	2.13
pH	(1)	(1)

[1] Within the range of 7.5 to 10.0 at all times.

(11) Subpart C—Miscellaneous Wastewater Streams.

BPT EFFLUENT LIMITATIONS

Pollutant or pollutant property	Maximum for any 1 day	Maximum for monthly average
	Metric units—mg/kg of lead used English units—pounds per 1,000,000 pounds of lead used	
Copper	0.81	0.43
Lead	0.18	0.09
Iron	0.51	0.26
Oil and grease	8.54	5.12
TSS	17.51	8.33
pH	(1)	(1)

[1] Within the range of 7.5 to 10.0 at all times.

(b) There shall be no discharge allowance for process wastewater pollutants from any battery manufacturing operation other than those battery manufacturing operations listed above.

[49 FR 9134, Mar. 9, 1984; 49 FR 13879, Apr. 9, 1984]

§ 461.32 Effluent limitations representing the degree of effluent reduction attainable by the application of the best available technology economically achievable (BAT).

(a) Except as provided in 40 CFR 125.30 through 125.32, any existing point source subject to this subpart must achieve the following effluent limitations representing the degree of effluent reduction attainable by the application of the best available technology economically achievable:

(1) Subpart C—Open Formation—Dehydrated.

BAT EFFLUENT LIMITATIONS

Pollutant or pollutant property	Maximum for any 1 day	Maximum for monthly average
	Metric units—mg/kg of lead used English units—pounds per 1,000,000 pounds of lead used	
Copper	3.19	1.68
Lead	0.71	0.34
Iron	2.02	1.02

(2) Subpart C—Open Formation—Wet.

BAT EFFLUENT LIMITATIONS

Pollutant or pollutant property	Maximum for any 1 day	Maximum for monthly average
	Metric units—mg/kg of lead used English units—pounds per 1,000,000 pounds of lead used	
Copper	0.100	0.053
Lead	0.022	0.010
Iron	0.06	0.03

(3) Subpart C—Plate Soak.

BAT EFFLUENT LIMITATIONS

Pollutant or pollutant property	Maximum for any 1 day	Maximum for monthly average
	Metric units—mg/kg of lead used English units—pounds per 1,000,000 pounds of lead used	
Copper	0.039	0.021
Lead	0.008	0.004
Iron	0.030	0.010

(4) Subpart C—Battery Wash (Detergent).

BAT EFFLUENT LIMITATIONS

Pollutant or Pollutant Property	Maximum for any 1 Day	Maximum for monthly average
	Metric units—mg/kg of lead used English units—pounds per 1,000,000 pounds of lead used	
Copper	1.71	0.90
Lead	0.38	0.18
Iron	1.08	0.55

(5) Subpart C—Direct Chill Lead Casting.

BAT EFFLUENT LIMITATIONS

Pollutant or pollutant property	Maximum for any 1 day	Maximum for monthly average
	Metric units—mg/kg of lead used English units—pounds per 1,000,000 pounds of lead used	
Copper	0.0004	0.0002
Lead	0.00008	0.00004
Iron	0.0002	0.0001

(6) Subpart C—Mold Release Formulation.

BAT EFFLUENT LIMITATIONS

Pollutant or pollutant property	Maximum for any 1 day	Maximum for monthly average
	Metric units—mg/kg of lead used English units—pounds per 1,000,000 pounds of lead used	
Copper	0.011	0.006
Lead	0.002	0.001
Iron	0.007	0.003

(7) Subpart C—Truck Wash.

BAT EFFLUENT LIMITATIONS

Pollutant or pollutant property	Maximum for any 1 day	Maximum for monthly average
	Metric units—mg/kg of lead in trucked batteries English units—pounds per 1,000,000 pounds of lead in trucked batteries	
Copper	0.026	0.014
Lead	0.005	0.002
Iron	0.016	0.008

(8) Subpart C—Laundry.

BAT EFFLUENT LIMITATIONS

Pollutant or pollutant property	Maximum for any 1 day	Maximum for monthly average
	Metric units—mg/kg of lead used English units—pounds per 1,000,000 pounds of lead used	
Copper	0.21	0.11
Lead	0.05	0.02
Iron	0.13	0.07

(9) Subpart C—Miscellaneous Wastewater Streams.

BAT EFFLUENT LIMITATIONS

Pollutant or pollutant property	Maximum for any 1 day	Maximum for monthly average
	Metric units—mg/kg of lead used English units—pounds per 1,000,000 pounds of lead used	
Copper	0.58	0.31
Lead	0.13	0.06
Iron	0.37	0.19

(b) There shall be no discharge allowance for process wastewater pollutants from any battery manufacturing operation other than those battery manufacturing operations listed above.

[49 FR 9134, Mar. 9, 1984; 49 FR 13879, Apr. 9, 1984, as amended at 51 FR 30816, Aug. 28, 1986]

§ 461.33 New source performance standards (NSPS).

(a) The discharge of wastewater pollutants from any new source subject to this subpart shall not exceed the standards set forth below:

(1) Subpart C—Open Formation—Dehydrated—NSPS.

Pollutant or pollutant property	Maximum for any 1 day	Maximum for monthly average
	Metric units—mg/kg of lead used English units—pounds per 1,000,000 pounds of lead used	
Copper	2.15	1.02
Lead	0.47	0.21
Iron	2.01	1.02
Oil and grease	16.80	16.80
TSS	25.20	20.16
pH	(1)	(1)

[1] Within the limits of 7.5 to 10.0 at all times.

(2) Subpart C—Open Formation—Wet—NSPS.

Pollutant or pollutant property	Maximum for any 1 day	Maximum for monthly average
	Metric units—mg/kg of lead used English units—pounds per 1,000,000 pounds of lead used	
Copper	0.067	0.032
Lead	0.014	0.006
Iron	0.063	0.032
Oil and grease	0.53	0.53
TSS	0.80	0.64
pH	(1)	(1)

[1] Within the limits of 7.5 to 10.0 at all times.

(3) Subpart C—Plate Soak—NSPS.

Pollutant or pollutant property	Maximum for any 1 day	Maximum for monthly average
	Metric units—mg/kg of lead used English units—pounds per 1,000,000 pounds of lead used	
Copper	0.026	0.012
Lead	0.005	0.002
Iron	0.025	0.012
Oil and grease	0.21	0.21
TSS	0.32	0.25
pH	(1)	(1)

[1] Within the limits of 7.5 to 10.0 at all times.

(4) Subpart C—Battery Wash (Detergent)—NSPS.

Pollutant or pollutant Property	Maximum for any 1 Day	Maximum for monthly average
	Metric units—mg/kg of lead used English units—pounds per 1,000,000 pounds of lead used	
Copper	1.152	0.549
Lead	0.252	0.117
Iron	1.08	0.55
Oil and grease	9.0	9.0
TSS	13.5	10.8
pH	(1)	(1)

[1] Within the limits of 7.5 to 10.0 at all times.

(5) Subpart C—Direct Chill Lead Casting—NSPS.

Pollutant or pollutant property	Maximum for any 1 day	Maximum for monthly average
	Metric units—mg/kg of lead used English units—pounds per 1,000,000 pounds of lead used	
Copper	0.000256	0.000122
Lead	0.000056	0.000026
Iron	0.000240	0.000122
Oil and grease	0.0020	0.0020
TSS	0.0030	0.0024
pH	(1)	(1)

[1] Within the limits of 7.5 to 10.0 at all times.

(6) Subpart C—Mold Release Formulation—NSPS.

Pollutant or pollutant property	Maximum for any 1 day	Maximum for monthly average
	Metric units—mg/kg of lead used English units—pounds per 1,000,000 pounds of lead used	
Copper	0.0077	0.0037
Lead	0.0017	0.0008
Iron	0.0072	0.0037
Oil and grease	0.060	0.060
TSS	0.090	0.072
pH	(1)	(1)

[1] Within the limits of 7.5 to 10.0 at all times.

(7) Subpart C—Truck Wash—NSPS.

Pollutant or pollutant property	Maximum for any 1 day	Maximum for monthly average
	Metric units—mg/kg of lead in trucked batteries English units—pounds per 1,000,000 pounds of lead in trucked batteries	
Copper	0.006	0.003
Lead	0.001	0.0007
Iron	0.006	0.003
Oil and grease	0.050	0.050
TSS	0.075	0.060
pH	(1)	(1)

[1] Within the limits of 7.5 to 10.0 at all times.

(8) Subpart C—Laundry—NSPS.

Pollutant or pollutant property	Maximum for any 1 day	Maximum for monthly average
	Metric units—mg/kg of lead used English units—pounds per 1,000,000 pounds of lead used	
Copper	0.14	0.07
Lead	0.03	0.01
Iron	0.13	0.07
Oil and grease	1.09	1.09
TSS	1.64	1.31
pH	(1)	(1)

[1] Within the limits of 7.5 to 10.0 at all times.

(9) Subpart C—Miscellaneous Wastewater Streams—NSPS.

Pollutant or pollutant property	Maximum for any 1 day	Maximum for monthly average
	Metric units—mg/kg of lead used English units—pounds per 1,000,000 pounds of lead used	
Copper	0.39	0.19
Lead	0.085	0.039
Iron	0.37	0.19
Oil and grease	3.07	3.07
TSS	4.61	3.69
pH	(1)	(1)

[1] Within the limits of 7.5 to 10.0 at all times.

(b) There shall be no discharge allowance for process wastewater pollutants from any battery manufacturing operation other than those battery manufacturing operations listed above.

[49 FR 9134, Mar. 9, 1984, as amended at 51 FR 30816, Aug. 28, 1986]

§ 461.34 Pretreatment standards for existing sources (PSES).

(a) Except as provided in 40 CFR 403.7 and 403.13, any existing source subject to this subpart that introduces pollutants into a publicly owned treatment works must comply with 40 CFR part 403 and achieve the pretreatment standards for existing sources listed below:

(1) Subpart C—Open Formation—Dehydrated—PSES.

Pollutant or pollutant property	Maximum for any 1 day	Maximum for monthly average
	Metric units—mg/kg of lead used English units—pounds per 1,000,000 pounds of lead used	
Copper	3.19	1.68
Lead	0.71	0.34

(2) Subpart C—Open Formation—Wet—PSES.

Pollutant or pollutant property	Maximum for any 1 day	Maximum for monthly average
	Metric units—mg/kg of lead used English units—pounds per 1,000,000 pounds of lead used	
Copper	0.100	0.053
Lead	0.022	0.010

(3) Subpart C—Plate Soak—PSES.

Pollutant or pollutant property	Maximum for any 1 day	Maximum for monthly average
	Metric units—mg/kg of lead used English units—pounds per 1,000,000 pounds of lead used	
Copper	0.039	0.021
Lead	0.008	0.004

(4) Subpart C—Battery Wash—(Detergent)—PSES.

Pollutant or pollutant Property	Maximum for any 1 Day	Maximum for monthly average
	Metric units—mg/kg of lead used English units—pounds per 1,000,000 pounds of lead used	
Copper	1.71	0.90
Lead	0.38	0.18

(5) Subpart C—Direct Chill Lead Casting—PSES.

Pollutant or pollutant property	Maximum for any 1 day	Maximum for monthly average
	Metric units—mg/kg of lead used English units—pounds per 1,000,000 pounds of lead used	
Copper	0.0004	0.0002
Lead	0.00008	0.00004

(6) Subpart C—Mold Release Formulation—PSES.

Pollutant or pollutant property	Maximum for any 1 day	Maximum for monthly average
	Metric units—mg/kg of lead used English units—pounds per 1,000,000 pounds of lead used	
Copper	0.011	0.006
Lead	0.002	0.001

(7) Subpart C—Truck Wash—PSES.

Pollutant or pollutant property	Maximum for any 1 day	Maximum for monthly average
	Metric units—mg/kg of lead in trucked batteries English units—pounds per 1,000,000 pounds of lead in trucked batteries	
Copper	0.026	0.014
Lead	0.005	0.002

(8) Subpart C—Laundry—PSES.

Pollutant or pollutant property	Maximum for any 1 day	Maximum for monthly average
	Metric units—mg/kg of lead used English units—pounds per 1,000,000 pounds of lead used	
Copper	0.21	0.11
Lead	0.05	0.02

(9) Subpart C—Miscellaneous Wastewater Streams—PSES.

Pollutant or pollutant property	Maximum for any 1 day	Maximum for monthly average
	Metric units—mg/kg of lead used English units—pounds per 1,000,000 pounds of lead used	
Copper	0.58	0.31
Lead	0.13	0.06

(b) There shall be no discharge allowance for process wastewater pollutants from any battery manufacturing operation other than those battery manufacturing operations listed above.

(c)(1) In cases where battery employee shower wastewater containing concentrations of lead exceeding 0.20 mg/l is combined with process wastewaters prior to treatment, the Control Authority may, for purposes of applying the Combined Wastestream Formula under § 403.6(e) of this chapter, notwithstanding the provisions of § 403.6(e), exercise its discretion and classify battery employee shower wastewater as an unregulated rather than a dilute (F_D) wastestream.

(2) Before the Control Authority may exercise its discretion to classify such a stream as an unregulated stream, the battery manufacturer must provide engineering, production, and sampling and analysis information sufficient to allow a determination by the Control Authority on how the stream should be classified.

[49 FR 9134, Mar. 9, 1984, as amended at 51 FR 30816, Aug. 28, 1986]

§ 461.35 Pretreatment standards for new sources (PSNS).

(a) Except as provided in § 403.7, any new source subject to this subpart that introduces pollutants into a publicly owned treatment works must comply with 40 CFR part 403 and achieve the following pretreatment standards for new sources:

(1) Subpart C—Open Formation—Dehydrated—PSNS.

Pollutant or pollutant property	Maximum for any 1 day	Maximum for monthly average
	Metric units—mg/kg of lead used English units—pounds per 1,000,000 pounds of lead used	
Copper	2.15	1.02
Lead	0.47	0.21

(2) Subpart C—Open Formation—Wet—PSNS.

Pollutant or pollutant property	Maximum for any 1 day	Maximum for monthly average
	Metric units—mg/kg of lead used English units—pounds per 1,000,000 pounds of lead used	
Copper	0.067	0.032
Lead	0.014	0.006

(3) Subpart C—Plate Soak—PSNS.

Pollutant or pollutant property	Maximum for any 1 day	Maximum for monthly average
	Metric units—mg/kg of lead used English units—pounds per 1,000,000 pounds of lead used	
Copper	0.026	0.012
Lead	0.005	0.002

(4) Subpart C—Battery Wash—(Detergent)—PSNS.

Pollutant or pollutant Property	Maximum for any 1 Day	Maximum for monthly average
	Metric units—mg/kg of lead used English units—pounds per 1,000,000 pounds of lead used	
Copper	1.152	0.549
Lead	0.252	0.117

(5) Subpart C—Direct Chill Lead Casting—PSNS.

Pollutant or pollutant property	Maximum for any 1 day	Maximum for monthly average
	Metric units—mg/kg of lead used English units—pounds per 1,000,000 pounds of lead used	
Copper	0.000256	0.000122
Lead	0.000056	0.000026

(6) Subpart C—Mold Release Formulation—PSNS.

Pollutant or pollutant property	Maximum for any 1 day	Maximum for monthly average
	Metric units—mg/kg of lead used English units—pounds per 1,000,000 pounds of lead used	
Copper	0.007	0.0037
Lead	0.0017	0.0008

(7) Subpart C—Truck Wash—PSNS.

Pollutant or pollutant property	Maximum for any 1 day	Maximum for monthly average
	Metric units—mg/kg of lead in trucked batteries English units—pounds per 1,000,000 pounds of lead in trucked batteries	
Copper	0.006	0.003
Lead	0.001	0.0007

(8) Subpart C—Laundry—PSNS.

Pollutant or pollutant property	Maximum for any 1 day	Maximum for monthly average
	Metric units—mg/kg of lead used English units—pounds per 1,000,000 pounds of lead used	
Copper	0.14	0.07
Lead	0.03	0.01

(9) Subpart C—Miscellaneous Wastewater Streams—PSNS.

Pollutant or pollutant property	Maximum for any 1 day	Maximum for monthly average
	Metric units—mg/kg of lead used English units—pounds per 1,000,000 pounds of lead used	
Copper	0.39	0.19
Lead	0.085	0.039

(b) There shall be no discharge allowance for process wastewater pollutants from any battery manufacturing operations other than those battery manufacturing operations listed above.

[49 FR 9134, Mar. 9, 1984, as amended at 51 FR 30817, Aug. 28, 1986]

Subpart D—Leclanche Subcategory

§ 461.40 Applicability; description of the Leclanche subcategory.

This subpart applies to discharges to waters of the United States, and introductions of pollutants into publicly owned treatment works from manufacturing Leclanche type batteries (zinc anode batteries with acid electrolyte).

§§ 461.41–461.42 [Reserved]

§ 461.43 New source performance standards (NSPS).

(a) The discharge of wastewater pollutants from any new source subject to this subpart shall not exceed the standards set forth below:

(1) Subpart D—Foliar Battery Miscellaneous Wash—NSPS.

Pollutant or pollutant property	Maximum for any 1 day	Maximum for monthly average
	Metric units—mg/kg of cells produced English units—pounds per 1,000,000 pounds of cells produced	
Mercury	0.010	0.004
Zinc	0.067	0.030
Manganese	0.019	0.015
Oil and grease	0.66	0.66
TSS	0.99	0.79
pH	(1)	(1)

[1] Within the range of 7.5 to 10.0 at all times.

(b) There shall be no discharge allowance for process wastewater pollutants

from any battery manufacturing operation other than those battery manufacturing operations listed above.

§ 461.44 Pretreatment standards for existing sources (PSES).

(a) Except as provided in 40 CFR 403.7 and 403.13, any existing source subject to this subpart that introduces pollutants into a publicly owned treatment works must comply with 40 CFR part 403 and achieve the following pretreatment standards for existing sources listed below:

(1) Subpart D—Foliar Battery Miscellaneous Wash—PSES.

Pollutant or pollutant property	Maximum for any 1 day	Maximum for monthly average
	Metric units—mg/kg of cells produced English units—pounds per 1,000,000 pounds of cells produced	
Mercury	0.010	0.004
Zinc	0.067	0.030
Manganese	0.019	0.015

(b) There shall be no discharge allowance for process wastewater pollutants from any battery manufacturing operation other than those battery manufacturing operations listed above.

[49 FR 9134, Mar. 9, 1984; 49 FR 27946, July 9, 1984]

§ 461.45 Pretreatment standards for new sources (PSNS).

(a) Except as provided in § 403.7 any new source subject to this subpart that introduces pollutants into a publicly owned treatment works must comply with 40 CFR part 403 and achieve the following pretreatment standards for new sources listed below.

(1) Subpart D—Foliar Battery Miscellaneous Wash—PSNS.

Pollutant or pollutant property	Maximum for any 1 day	Maximum for monthly average
	Metric units—mg/kg of cells produced English units—pounds per 1,000,000 pounds of cells produced	
Mercury	0.010	0.004
Zinc	0.067	0.030
Manganese	0.019	0.015

(b) There shall be no discharge allowance for process wastewater pollutants from any battery manufacturing operation other than those battery manufacturing operations listed above.

Subpart E—Lithium Subcategory

§ 461.50 Applicability; description of the lithium subcategory.

This subpart applies to discharges to waters of the United States and introduction of pollutants into publicly owned treatment works from the manufacturing of lithium anode batteries.

§§ 461.51–461.52 [Reserved]

§ 461.53 New source performance standards (NSPS).

(a) The discharge of wastewater pollutants from any new source subject to this subpart shall not exceed the standards set forth below:

(1) Subpart E—Lead Iodide Cathodes—NSPS.

Pollutant or pollutant property	Maximum for any 1 day	Maximum for monthly average
	Metric units—mg/kg of lead English units—pounds per 1,000,000 pounds of lead	
Chromium	23.34	9.46
Lead	17.66	8.20
Iron	75.70	38.48
TSS	946.2	756.96
pH	(1)	(1)

[1] Within the range of 7.5–10.0 at all times.

(2) Subpart E—Iron Disulfide Cathodes—NSPS.

Pollutant or pollutant property	Maximum for any 1 day	Maximum for monthly average
	Metric units—mg/kg of Iron disulfide English units—pounds per 1,000,000 pounds of Iron disulfide	
Chromium	2.79	1.13
Lead	2.11	0.98
Iron	9.05	4.60
TSS	113.1	90.5
pH	(1)	(1)

[1] Within the range of 7.5–10.0 at all times.

(3) Subpart E—Miscellaneous Wastewater Streams—NSPS.

Pollutant or pollutant property	Maximum for any 1 day	Maximum for monthly average
	Metric units—mg/kg of cells produced English units—pounds per 1,000,000 pounds of cells produced	
Chromium	0.039	0.016
Lead	0.030	0.014
Iron	0.129	0.066
TSS	1.62	1.30
pH	(1)	(1)

[1] Within the range of 7.5–10.0 at all times.

(4) Subpart E—Air Scrubbers—NSPS.

Pollutant or pollutant property	Maximum for any 1 day	Maximum for monthly average
	Metric units—mg/kg of cells produced English units—pounds per 1,000,000 pounds of cells produced	
TSS	434.0	207.0
pH	(1)	(1)

[1] Within the range of 7.5–10.0 at all times.

(b) There shall be no discharge allowance for process wastewater pollutants from any battery manufacturing operation other than those battery manufacturing operations listed above.

§ 461.54 [Reserved]

§ 461.55 Pretreatment standards for new sources (PSNS).

(a) Except as provided in § 403.7 any new source subject to this subpart that introduces pollutants into a publicly owned treatment works must comply with 40 CFR part 403 and achieve the following pretreatment standards for new sources listed below:

(1) Subpart E—Lead Iodide Cathodes—PSNS.

Pollutant or pollutant property	Maximum for any 1 day	Maximum for monthly average
	Metric units—mg/kg of lead English units—pounds per 1,000,000 pounds of lead	
Chromium	23.34	9.46
Lead	17.66	8.20

(2) Subpart E—Iron Disulfide Cathodes—PSNS.

Pollutant or pollutant property	Maximum for any 1 day	Maximum for monthly average
	Metric units—mg/kg of iron disulfide English units—pounds per 1,000,000 pounds of iron disulfide	
Chromium	2.79	1.13
Lead	2.11	0.98

(3) Subpart E—Miscellaneous Wastewater Streams—PSNS.

Pollutant or pollutant property	Maximum for any 1 day	Maximum for monthly average
	Metric units—mg/kg of cells produced English units—pounds per 1,000,000 pounds of cells produced	
Chromium	0.039	0.016
Lead	0.030	0.014

(b) There shall be no discharge allowance for process wastewater pollutants from any battery manufacturing operation other than those battery manufacturing operations listed above.

Subpart F—Magnesium Subcategory

§ 461.60 Applicability; description of the magnesium subcategory.

This subpart applies to discharges to waters of the United States and introduction of pollutants into publicly owned treatment works from the manufacturing of magnesium anode batteries.

§§ 461.61–461.62 [Reserved]

§ 461.63 New source performance standards (NSPS).

(a) The discharge of wastewater pollutants from any new source subject to this subpart shall not exceed the standards set forth below:

(1) Subpart F—Silver Chloride Cathodes—Chemically Reduced—NSPS.

Pollutant or pollutant property	Maximum for any 1 day	Maximum for monthly average
	Metric units—mg/kg of silver processed English units—pounds per 1,000,000 pounds of silver processed	
Lead	22.93	10.65
Silver	23.75	9.83
Iron	98.28	49.96
TSS	1,228.5	982.8
COD	4,095.0	1,999.0
pH	(1)	(1)

[1] Within the range of 7.5–10.0 at all times.

(2) Subpart F—Silver Chloride Cathodes—Electrolytic—NSPS.

Pollutant or pollutant property	Maximum for any 1 day	Maximum for monthly average
	Metric units—mg/kg of silver processed English units—pounds per 1,000,000 pounds of silver processed	
Lead	40.6	18.9
Silver	42.1	17.4
Iron	174.0	88.5
TSS	2,175.0	1,740.0
COD	7,250.0	3,540.0
pH	(1)	(1)

[1] Within the range of 7.5–10.0 at all times.

(3) Subpart F—Cell Testing—NSPS.

Pollutant or pollutant property	Maximum for any 1 day	Maximum for monthly average
	Metric units—mg/kg of cells produced English units—pounds per 1,000,000 pounds of cells produced	
Lead	19.5	7.89
Silver	15.3	6.31
Iron	63.1	32.1
TSS	789.0	631.2
COD	2,630.0	1,290.0
pH	(1)	(1)

[1] Within the range of 7.5–10.0 at all times.

(4) Subpart F—Floor and Equipment Wash—NSPS.

Pollutant or pollutant property	Maximum for any 1 day	Maximum for monthly average
	Metric units—mg/kg of cells produced English units—pounds per 1,000,000 pounds of cells produced	
Lead	0.026	0.012
Silver	0.027	0.011
Iron	0.112	0.057
COD	4.70	2.30
TSS	1.41	1.13
pH	(1)	(1)

[1] Within the range of 7.5–10.0 at all times.

(5) Subpart F—Air Scrubber—NSPS.

Pollutant or pollutant property	Maximum for any 1 day	Maximum for monthly average
	Metric units—mg/kg of cells produced English units—pounds per 1,000,000 pounds of cells produced	
TSS	8,467.0	4,030.0
pH	(1)	(1)

[1] Within the range of 7.5–10.0 at all times.

(b) There shall be no discharge allowance for process wastewater pollutants from any battery manufacturing operation other than those battery manufacturing operations listed above.

[49 FR 9134, Mar. 9, 1984; 49 FR 13879, Apr. 9, 1984]

§ 461.64 Pretreatment standards for existing sources (PSES).

(a) Except as provided in 40 CFR 403.7 and 403.13, any existing source subject to this subpart that introduces pollutants into a publicly owned treatment works must comply with 40 CFR part 403 and achieve the following pretreatment standards for existing sources listed below:

(1) Subpart F—Silver Chloride Cathodes—Chemically Reduced—PSES.

Pollutant or pollutant property	Maximum for any 1 day	Maximum for monthly average
	Metric units—mg/kg of silver processed English units—pounds per 1,000,000 pounds of silver processed	
Lead	1,032.36	491.60
Silver	1,007.78	417.86

(2) Subpart F—Silver Chloride Cathodes—Electrolytic—PSES.

Pollutant or pollutant property	Maximum for any 1 day	Maximum for monthly average
	Metric units—mg/kg of silver processed	
	English units—pounds per 1,000,000 pounds of silver processed	
Lead	60.9	29.0
Silver	59.5	24.7

(3) Subpart F—Cell Testing—PSES.

Pollutant or pollutant property	Maximum for any 1 day	Maximum for monthly average
	Metric units—mg/kg of cells produced	
	English units—pounds per 1,000,000 pounds of cells produced	
Lead	22.1	10.5
Silver	21.6	8.9

(4) Subpart F—Floor and Equipment Wash—PSES.

Pollutant or pollutant property	Maximum for any 1 day	Maximum for monthly average
	Metric units—mg/kg of cells produced	
	English units—pounds per 1,000,000 pounds of cells produced	
Lead	0.039	0.018
Silver	0.038	0.015

(b) There shall be no discharge allowance for process wastewater pollutants from any battery manufacturing operation other than those battery manufacturing operations listed above.

§ 461.65 Pretreatment standards for new sources (PSNS).

(a) Except as provided in § 403.7 any new source subject to this subpart that introduces pollutants into a publicly owned treatment works must comply with 40 CFR part 403 and achieve the following pretreatment standards for new sources listed below:

(1) Subpart F—Silver Chloride Cathodes—Chemically Reduced—PSNS.

Pollutant or pollutant property	Maximum for any 1 day	Maximum for monthly average
	Metric units—mg/kg of silver processed	
	English units—pounds per 1,000,000 pounds of silver processed	
Lead	22.93	10.65
Silver	23.75	9.83

(2) Subpart F—Silver Chloride Cathodes—Electrolytic PSNS.

Pollutant or pollutant property	Maximum for any 1 day	Maximum for monthly average
	Metric units—mg/kg of silver processed	
	English units—pounds per 1,000,000 pounds of silver processed	
Lead	40.6	18.9
Silver	42.1	17.4

(3) Subpart F—Cell Testing—PSNS.

Pollutant or pollutant property	Maximum for any 1 day	Maximum for monthly average
	Metric units—mg/kg of cells produced	
	English units—pounds per 1,000,000 pounds of cells produced	
Lead	19.5	7.89
Silver	15.3	6.31

(4) Subpart F—Floor and Equipment Wash—PSNS.

Pollutant or pollutant property	Maximum for any 1 day	Maximum for monthly average
	Metric units—mg/kg of cells produced	
	English units—pounds per 1,000,000 pounds of cells produced	
Lead	0.026	0.012
Silver	0.027	0.011

(b) There shall be no discharge allowance for process wastewater pollutants from any battery manufacturing operation other than those battery manufacturing operations listed above.

Subpart G—Zinc Subcategory

§ 461.70 Applicability; description of the zinc subcategory.

This subpart applies to discharges to waters of the United States, and introductions of pollutants into publicly owned treatment works from the manufacturing of zinc anode batteries.

§ 461.71 Effluent limitations representing the degree of effluent reduction attainable by the application of the best practicable control technology currently available (BPT).

(a) Except as provided in 40 CFR 125.30 through 125.32, any existing point source subject to this subpart must achieve the following effluent limitations representing the degree of effluent reduction attainable by the application of the best practicable control technology currently available:

(1) Subpart G—Wet Amalgamated Powder Anodes.

BPT EFFLUENT LIMITATIONS

Pollutant or pollutant property	Maximum for any 1 day	Maximum for monthly average
	Metric units—mg/kg of Zinc English units—pounds per 1,000,000 pounds of Zinc	
Chromium	1.67	0.68
Mercury	0.95	0.38
Silver	1.56	0.65
Zinc	5.55	2.32
Manganese	2.58	1.10
Oil and grease	76.0	45.6
TSS	155.8	74.1
pH	(1)	(1)

1 Within the range of 7.5—10.0 at all times.

(2) Subpart G—Gelled Amalgam Anodes.

BPT EFFLUENT LIMITATIONS

Pollutant or pollutant property	Maximum for any 1 day	Maximum for monthly average
	Metric units—mg/kg of Zinc English units—pounds per 1,000,000 pounds of Zinc	
Chromium	0.30	0.12
Mercury	0.17	0.07
Silver	0.28	0.12
Zinc	0.99	0.42
Manganese	0.46	0.20
Oil and grease	13.6	8.16
TSS	27.9	13.26
pH	(1)	(1)

1 Within the range of 7.5—10.0 at all times.

(3) Subpart G—Zinc Oxide, Formed Anodes.

BPT EFFLUENT LIMITATIONS

Pollutant or pollutant property	Maximum for any 1 day	Maximum for monthly average
	Metric units—mg/kg of Zinc English units—pounds per 1,000,000 pounds of Zinc	
Chromium	62.9	25.7
Mercury	35.8	14.3
Silver	58.7	24.3
Zinc	208.8	87.2
Manganese	97.2	41.5
Oil and grease	2,860.0	1,716.0
TSS	5,863.0	2,789.0
pH	(1)	(1)

1 Within the range of 7.5–10.0 at all times.

(4) Subpart G—Electrodeposited Anodes.

BPT EFFLUENT LIMITATIONS

Pollutant or pollutant property	Maximum for any 1 day	Maximum for monthly average
	Metric units—mg/kg of zinc deposited English units—pounds per 1,000,000 pounds of zinc deposited	
Chromium	1,404.0	574.0
Mercury	798.0	319.0
Silver	1,308.0	543.0
Zinc	4,657.0	1,946.0
Manganese	2,169.0	925.0
Oil and grease	63,800.0	38,280.0
TSS	130,700.0	62,210.0
pH	(1)	(1)

1 Within the range of 7.5–10.0 at all times.

(5) Subpart G—Silver Powder, Formed Cathodes.

BPT EFFLUENT LIMITATIONS

Pollutant or pollutant property	Maximum for any 1 day	Maximum for monthly average
	Metric units—mg/kg of silver applied English units—pounds per 1,000,000 pounds of silver applied	
Chromium	86.2	35.3
Mercury	49.0	19.6
Silver	80.4	33.3
Zinc	286.2	119.6
Manganese	133.3	56.8
Oil and grease	3,920.0	2,350.0
TSS	8,036.0	3,822.0
pH	(1)	(1)

1 Within the range of 7.5–10.0 at all times.

(6) Subpart G—Silver Oxide Powder, Formed Cathodes.

BPT EFFLUENT LIMITATIONS

Pollutant or pollutant property	Maximum for any 1 day	Maximum for monthly average
	Metric units—mg/kg of silver applied English units—pounds per 1,000,000 pounds of silver applied	
Chromium	57.7	23.6
Mercury	32.8	13.1
Silver	53.7	22.3
Zinc	191.3	79.9
Manganese	89.1	38.0
Oil and grease	2,620.0	1,570.0
TSS	5,370.0	2,554.0
pH	(1)	(1)

1 Within the range of 7.5–10.0 at all times.

(7) Subpart G—Silver Peroxide Cathodes.

BPT EFFLUENT LIMITATIONS

Pollutant or pollutant property	Maximum for any 1 day	Maximum for monthly average
	Metric units—mg/kg of silver applied English units—pounds per 1,000,000 pounds of silver applied	
Chromium	13.8	5.65
Mercury	7.85	3.14
Silver	12.9	5.34
Zinc	45.8	19.2
Manganese	21.4	9.11
Oil and grease	628.0	377.0
TSS	1,287.0	612.0
pH	(1)	(1)

1 Within the range of 7.5–10.0 at all times.

(8) Subpart G—Nickel Impregnated Cathodes.

BPT EFFLUENT LIMITATIONS

Pollutant or pollutant property	Maximum for any 1 day	Maximum for monthly average
	Metric units—mg/kg of nickel applied English units—pounds per 1,000,000 pounds of nickel applied	
Chromium	721.6	295.2
Mercury	410.0	164.0
Nickel	3,149.0	2,083.0
Silver	672.4	279.0
Zinc	2,394.4	1,000.4
Manganese	1,115.2	475.6
Oil and grease	32,800.0	19,680.0
TSS	67,240.0	31,980.0
pH	(1)	(1)

1 Within the range of 7.5–10.0 at all times.

(9) Subpart G—Miscellaneous Wastewater Streams.

BPT EFFLUENT LIMITATIONS

Pollutant or pollutant property	Maximum for any 1 day	Maximum for monthly average
	Metric units—mg/kg of cells produced English units—pounds per 1,000,000 pounds of cells produced	
Chromium	3.85	1.58
Cyanide	2.54	1.05
Mercury	2.19	0.88
Nickel	16.82	11.12
Silver	3.59	1.49
Zinc	12.79	5.34
Manganese	5.96	2.54
Oil and grease	175.20	105.12
TSS	359.16	170.82
pH	(1)	(1)

1 Within the range of 7.5–10.0 at all times.

(10) Subpart G—Silver Etch.

BPT EFFLUENT LIMITATIONS

Pollutant or pollutant property	Maximum for any 1 day	Maximum for monthly average
	Metric units—mg/kg of silver processed English units—pounds per 1,000,000 pounds of silver processed	
Chromium	21.6	8.84
Mercury	12.3	4.91
Silver	20.2	8.35
Zinc	71.7	30.0
Manganese	33.4	14.3
Oil and grease	982.0	589.2
TSS	2,013.1	957.5
pH	(1)	(1)

[1] Within the range of 7.5–10.0 at all times.

(11) Subpart G—Silver Peroxide Production.

BPT EFFLUENT LIMITATIONS

Pollutant or pollutant property	Maximum for any 1 day	Maximum for monthly average
	Metric units—mg/kg of silver peroxide processed English units—pounds per 1,000,000 pounds of silver peroxide processed	
Chromium	23.0	9.40
Mercury	13.1	5.22
Silver	21.4	8.88
Zinc	76.2	31.80
Manganese	35.5	15.10
Oil and grease	1,044.0	627.00
TSS	2,140.0	1,018.00
pH	(1)	(1)

[1] Within the range of 7.5–10.0 at all times.

(12) Subpart G—Silver Powder Production.

BPT EFFLUENT LIMITATIONS

Pollutant or pollutant property	Maximum for any 1 day	Maximum for monthly average
	Metric units—mg/kg of silver powder processed English units—pounds per 1,000,000 pounds of silver powder processed	
Chromium	9.33	3.82
Mercury	5.30	2.12
Silver	8.69	3.61
Zinc	30.95	12.93
Manganese	14.42	6.15
Oil and grease	424.0	254.40
TSS	869.0	413.40
pH	(1)	(1)

[1] Within the range of 7.5–10.0 at all times.

(b) There shall be no discharge allowance for process wastewater pollutants from any battery manufacturing operation other than those battery manufacturing operations listed above.

[49 FR 9134, Mar. 9, 1984; 49 FR 13879, Apr. 9, 1984]

§ 461.72 Effluent limitations representing the degree of effluent reduction attainable by the application of the best available technology economically achievable (BAT).

(a) Except as provided in 40 CFR 125.30 through 125.32, any existing point source subject to this subpart must achieve the following effluent limitations representing the degree of effluent reduction attainable by the application of the best available technology economically achievable:

(1) Subpart G—Wet Amalgamated Powder Anodes.

BAT EFFLUENT LIMITATIONS

Pollutant or pollutant property	Maximum for any 1 day	Maximum for monthly average
	Metric units—mg/kg of Zinc English units—pounds per 1,000,000 pounds of Zinc	
Chromium	0.24	0.099
Mercury	0.14	0.055
Silver	0.23	0.093
Zinc	0.80	0.34
Manganese	0.37	0.16

(2) Subpart G—Gelled Amalgam Anodes.

BAT EFFLUENT LIMITATIONS

Pollutant or pollutant property	Maximum for any 1 day	Maximum for monthly average
	Metric units—mg/kg of Zinc English units—pounds per 1,000,000 pounds of Zinc	
Chromium	0.030	0.012
Mercury	0.017	0.007
Silver	0.028	0.012
Zinc	0.099	0.042
Manganese	0.046	0.020

(3) Subpart G—Zinc Oxide Formed Anodes.

BAT EFFLUENT LIMITATIONS

Pollutant or pollutant property	Maximum for any 1 day	Maximum for monthly average
	Metric units—mg/kg of Zinc English units—pounds per 1,000,000 pounds of Zinc	
Chromium	9.53	3.90
Mercury	5.42	2.17
Silver	8.89	3.68
Zinc	31.64	13.22
Manganese	14.74	6.28

(4) Subpart G—Electrodeposited Anodes.

BAT EFFLUENT LIMITATIONS

Pollutant or pollutant property	Maximum for any 1 day	Maximum for monthly average
	Metric units—mg/kg of zinc deposited English units—pounds per 1,000,000 pounds of zinc deposited	
Chromium	94.47	38.65
Mercury	53.68	21.47
Silver	88.03	36.50
Zinc	313.46	130.97
Manganese	146.00	62.26

(5) Subpart G—Silver Powder Formed Cathodes.

BAT EFFLUENT LIMITATIONS

Pollutant or pollutant property	Maximum for any 1 day	Maximum for monthly average
	Metric units—mg/kg of silver applied English units—pounds per 1,000,000 pounds of silver applied	
Chromium	13.07	5.35
Mercury	7.43	2.97
Silver	12.18	5.05
Zinc	43.36	18.12
Manganese	20.20	8.61

(6) Subpart G—Silver Oxide Powder Formed Cathodes.

BAT EFFLUENT LIMITATIONS

Pollutant or pollutant property	Maximum for any 1 day	Maximum for monthly average
	Metric units—mg/kg of silver applied English units—pounds per 1,000,000 pounds of silver applied	
Chromium	8.73	3.57
Mercury	4.96	1.99
Silver	8.14	3.37
Zinc	28.98	12.11
Manganese	13.50	5.76

(7) Subpart G—Silver Peroxide Cathodes.

BAT EFFLUENT LIMITATIONS

Pollutant or pollutant property	Maximum for any 1 day	Maximum for monthly average
	Metric units—mg/kg of silver applied English units—pounds per 1,000,000 pounds of silver applied	
Chromium	2.09	0.87
Mercury	1.19	0.48
Silver	1.95	0.81
Zinc	6.95	2.90
Manganese	3.24	1.38

(8) Subpart G—Nickel Impregnated Cathodes.

BAT EFFLUENT LIMITATIONS

Pollutant or pollutant property	Maximum for any 1 day	Maximum for monthly average
	Metric units—mg/kg of nickel applied English units—pounds per 1,000,000 pounds of nickel applied	
Chromium	88.0	36.0
Mercury	50.0	20.0
Nickel	384.0	254.0
Silver	82.0	34.0
Zinc	292.0	122.0
Manganese	136.0	58.0

(9) Subpart G—Miscellaneous Wastewater Streams.

BAT EFFLUENT LIMITATIONS

Pollutant or pollutant property	Maximum for any 1 day	Maximum for monthly average
	Metric units—mg/kg of cells produced English units—pounds per 1,000,000 pounds of cells produced	
Chromium	0.57	0.23
Cyanide	0.38	0.16
Mercury	0.32	0.13
Nickel	2.48	1.64
Silver	0.53	0.22
Zinc	1.88	0.79
Manganese	0.88	0.37

(10) Subpart G—Silver Etch.

BAT EFFLUENT LIMITATIONS

Pollutant or pollutant property	Maximum for any 1 day	Maximum for monthly average
	Metric units—mg/kg of silver processed English units—pounds per 1,000,000 pounds of silver processed	
Chromium	3.27	1.34
Mercury	1.86	0.74
Silver	3.05	1.26
Zinc	10.86	4.54
Manganese	5.06	2.16

(11) Subpart G—Silver Peroxide Production.

BAT EFFLUENT LIMITATIONS

Pollutant or pollutant property	Maximum for any 1 day	Maximum for monthly average
	Metric units—mg/kg of silver peroxide produced English units—pounds per 1,000,000 pounds of silver peroxide produced	
Chromium	3.48	1.42
Mercury	1.98	0.79
Silver	3.24	1.34
Zinc	11.55	4.83
Manganese	5.38	2.29

(12) Subpart G—Silver Powder Production.

BAT EFFLUENT LIMITATIONS

Pollutant or pollutant property	Maximum for any 1 day	Maximum for monthly average
	Metric units—mg/kg of silver powder produced English units—pounds per 1,000,000 pounds of silver powder produced	
Chromium	1.41	0.58
Mercury	0.80	0.32
Silver	1.32	0.55
Zinc	4.69	1.96
Manganese	2.18	0.93

(b) There shall be no discharge allowance for process wastewater pollutants from any battery manufacturing operation other than those battery manufacturing operations listed above.

[49 FR 9134, Mar. 9, 1984; 49 FR 13879, Apr. 9, 1984]

§ 461.73 New source performance standards. (NSPS).

(a) The discharge of wastewater pollutants from any new source subject to this subpart shall not exceed the standards set forth below:

(1) Subpart G—Zinc Oxide Formed Anodes—NSPS.

Pollutant or pollutant property	Maximum for any 1 day	Maximum for monthly average
	Metric units—mg/kg of zinc English units—pounds per 1,000,000 pounds of zinc	
Chromium	4.55	1.97
Mercury	2.82	1.19
Silver	4.55	1.97
Zinc	0.87	0.39
Manganese	6.50	4.98
Oil and grease	216.7	216.7
TSS	325.0	260.0
pH	(1)	(1)

[1] Within the limits of 7.5–10.0 at all times.

(2) Subpart G—Electrodeposited Anodes—NSPS.

Pollutant or pollutant property	Maximum for any 1 day	Maximum for monthly average
	Metric units—mg/kg of zinc deposited English units—pounds per 1,000,000 pounds of zinc deposited	
Chromium	45.09	19.54
Mercury	27.91	11.81
Silver	45.09	19.54
Zinc	8.59	3.86
Manganese	64.41	49.38
Oil and grease	2,147.00	2,147.00
TSS	3,220.50	2,576.40
pH	(1)	(1)

[1] Within the limits of 7.5–10.0 at all times.

(3) Subpart G—Silver Powder Formed Cathodes—NSPS.

Pollutant or pollutant property	Maximum for any 1 day	Maximum for monthly average
	Metric units—mg/kg of silver applied English units—pounds per 1,000,000 pounds of silver applied	
Chromium	6.24	2.70
Mercury	3.86	1.63
Silver	6.24	2.70
Zinc	1.19	0.53
Manganese	8.91	6.83
Oil and grease	297.00	297.00
TSS	445.5	356.40
pH	(1)	(1)

[1] Within the limits of 7.5–10.0 at all times.

(4) Subpart G—Silver Oxide Powder Formed Cathodes—NSPS.

Pollutant or pollutant property	Maximum for any 1 day	Maximum for monthly average
	Metric units—mg/kg of silver applied English units—pounds per 1,000,000 pounds of silver applied	
Chromium	4.17	1.81
Mercury	2.58	1.09
Silver	4.17	1.81
Zinc	0.79	0.36
Manganese	5.96	4.57
Oil and grease	198.5	198.5
TSS	297.8	238.2
pH	(1)	(1)

[1] Within the limits of 7.5–10.0 at all times.

(5) Subpart G—Silver Peroxide Cathodes—NSPS.

Pollutant or pollutant property	Maximum for any 1 day	Maximum for monthly average
	Metric units—mg/kg of silver applied English units—pounds per 1,000,000 pounds of silver applied	
Chromium	1.00	0.43
Mercury	0.62	0.26
Silver	1.00	0.43
Zinc	0.19	0.09
Manganese	1.43	1.09
Oil and grease	47.6	47.6
TSS	71.4	57.1
pH	(1)	(1)

[1] Within the limits of 7.5–10.0 at all times.

(6) Subpart G—Nickel Impregnated Cathodes—NSPS.

Pollutant or pollutant property	Maximum for any 1 day	Maximum for monthly average
	Metric units—mg/kg of nickel applied English units—pounds per 1,000,000 pounds of nickel applied	
Chromium	42.0	18.2
Mercury	26.0	11.0
Nickel	42.0	18.2
Silver	42.0	18.2
Zinc	8.0	3.6
Manganese	60.0	46.0
Oil and grease	2,000.0	2,000.0
TSS	3,000.0	2,400.00
pH	(1)	(1)

[1] Within the limits of 7.5–10.0 at all times.

(7) Subpart G—Miscellaneous Wastewater Streams—NSPS.

Pollutant or pollutant property	Maximum for any 1 day	Maximum for monthly average
	Metric units—mg/kg of cells produced English units—pounds per 1,000,000 pounds of cells produced	
Chromium	0.27	0.12
Cyanide	0.039	0.016
Mercury	0.17	0.07
Nickel	0.27	0.12
Silver	0.27	0.12
Zinc	0.05	0.02
Manganese	0.39	0.30
Oil and grease	12.90	12.90
TSS	19.35	15.48
pH	(1)	(1)

[1] Within the limits of 7.5–10.0 at all times.

(8) Subpart G—Silver Etch—NSPS.

Pollutant or pollutant property	Maximum for any 1 day	Maximum for monthly average
	Metric units—mg/kg of silver processed English units—pounds per 1,000,000 pounds of silver processed	
Chromium	1.56	0.68
Mercury	0.97	0.41
Silver	1.56	0.68
Zinc	0.30	0.13
Manganese	2.23	1.71
Oil and grease	74.40	74.40
TSS	111.60	89.28
pH	(1)	(1)

[1] Within the limits of 7.5–10.0 at all times.

(9) Subpart G—Silver Peroxide Production—NSPS.

Pollutant or pollutant property	Maximum for any 1 day	Maximum for monthly average
	Metric units—mg/kg of silver peroxide produced English units—pounds per 1,000,000 pounds of silver peroxide produced	
Chromium	1.66	0.72
Mercury	1.03	0.44
Silver	1.66	0.72
Zinc	0.32	0.14
Manganese	2.37	1.82
Oil and grease	79.10	79.10
TSS	118.65	94.92
pH	(1)	(1)

[1] Within the limits of 7.5–10.0 at all times.

(10) Subpart G—Silver Powder Production—NSPS.

Pollutant or pollutant property	Maximum for any 1 day	Maximum for monthly average
	Metric units—mg/kg of silver powder produced English units—pounds per 1,000,000 pounds of silver powder produced	
Chromium	0.67	0.29
Mercury	0.42	0.18
Silver	0.67	0.29
Zinc	0.13	0.06
Manganese	0.96	0.74
Oil and grease	32.10	32.10
TSS	48.15	38.52
pH	(1)	(1)

[1] Within the limits of 7.5–10.0 at all times.

(b) There shall be no discharge allowance for process wastewater pollutants from any battery manufacturing operation other than those battery manufacturing operations listed above.

§ 461.74 Pretreatment standards for existing sources (PSES).

(a) Except as provided in 40 CFR 403.7 and 403.13, any existing source subject to this subpart that introduces pollutants into a publicly owned treatment works must comply with 40 CFR part 403 and achieve the following pretreatment standards for existing sources:

(1) Subpart G—Wet Amalgamated Powder Anode—PSES.

Pollutant or pollutant property	Maximum for any 1 day	Maximum for monthly average
	Metric units—mg/kg of zinc English units—pounds per 1,000,000 pounds of zinc	
Chromium	0.24	0.099
Mercury	0.14	0.055
Silver	0.23	0.093
Zinc	0.80	0.34
Manganese	0.37	0.16

(2) Subpart G—Gelled Amalgam Anodes—PSES.

Pollutant or pollutant property	Maximum for any 1 day	Maximum for monthly average
	Metric units—mg/kg of zinc English units—pounds per 1,000,000 pounds of zinc	
Chromium	0.030	0.12
Mercury	0.017	0.006
Silver	0.028	0.012
Zinc	0.099	0.042
Manganese	0.046	0.020

(3) Subpart G—Zinc Oxide Formed Anodes—PSES.

Pollutant or pollutant property	Maximum for any 1 day	Maximum for monthly average
	Metric units—mg/kg of zinc English units—pounds per 1,000,000 pounds of zinc	
Chromium	9.53	3.90
Mercury	5.42	2.17
Silver	8.89	3.68
Zinc	31.64	13.22
Manganese	14.74	6.28

(4) Subpart G—Electrodeposited Anodes—PSES.

Pollutant or pollutant property	Maximum for any 1 day	Maximum for monthly average
	Metric units—mg/kg of zinc deposited English units—pounds per 1,000,000 pounds of zinc deposited	
Chromium	94.47	38.65
Mercury	53.68	21.47
Silver	88.03	36.50
Zinc	313.46	130.97
Manganese	146.00	62.26

(5) Subpart G—Silver Powder Formed Cathodes—PSES.

Pollutant or pollutant property	Maximum for any 1 day	Maximum for monthly average
	Metric units—mg/kg of silver applied English units—pounds per 1,000,000 pounds of silver applied	
Chromium	13.07	5.35
Mercury	7.43	2.97
Silver	12.18	5.05
Zinc	43.36	18.12
Maganese	20.20	8.61

(6) Subpart G—Silver Oxide Powder Formed Cathodes—PSES.

Pollutant or pollutant property	Maximum for any 1 day	Maximum for monthly average
	Metric units—mg/kg of silver applied English units—pounds per 1,000,000 pounds of silver applied	
Chromium	8.73	3.57
Mercury	4.96	1.99
Silver	8.14	3.37
Zinc	28.98	12.11
Manganese	13.50	5.76

(7) Subpart G—Silver Peroxide Cathodes—PSES.

Pollutant or pollutant property	Maximum for any 1 day	Maximum for monthly average
	Metric units—mg/kg of silver applied English units—pounds per 1,000,000 pounds of silver applied	
Chromium	2.09	0.87
Mercury	1.19	0.48
Silver	1.95	0.81
Zinc	6.95	2.90
Manganese	3.24	1.38

(8) Subpart G—Nickel Impregnated Cathodes—PSES.

Pollutant or pollutant property	Maximum for any 1 day	Maximum for monthly average
	Metric units—mg/kg of nickel applied English units—pounds per 1,000,000 pounds of nickel applied	
Chromium	88.0	36.0
Mercury	50.0	20.0
Nickel	384.0	254.0
Silver	82.0	34.0
Zinc	292.0	122.0
Manganese	136.0	58.0

(9) Subpart G—Miscellaneous Wastewater Streams—PSES.

Pollutant or pollutant property	Maximum for any 1 day	Maximum for monthly average
	Metric units—mg/kg of cells produced English units—pounds per 1,000,000 pounds of cells produced	
Chromium	0.57	0.23
Cyanide	0.38	0.16
Mercury	0.32	0.13
Nickel	2.48	1.64
Silver	0.53	0.22
Zinc	1.88	0.79
Manganese	0.88	0.37

(10) Subpart G—Silver Etch—PSES.

Pollutant or pollutant property	Maximum for any 1 day	Maximum for monthly average
	Metric units—mg/kg of silver processed English units—pounds per 1,000,000 pounds of silver processed	
Chromium	3.27	1.34
Mercury	1.86	0.74
Silver	3.05	1.26
Zinc	10.86	4.54
Manganese	5.06	2.16

(11) Subpart G—Silver Peroxide Production—PSES.

Pollutant or pollutant property	Maximum for any 1 day	Maximum for monthly average
	Metric units—mg/kg of silver peroxide produced English units—pounds per 1,000,000 pounds of silver peroxide produced	
Chromium	3.48	1.42
Mercury	1.98	0.79
Silver	3.24	1.34
Zinc	11.55	4.83
Manganese	5.38	2.29

(12) Subpart G—Silver Powder Production—PSES.

Pollutant or pollutant property	Maximum for any 1 day	Maximum for monthly average
	Metric units—mg/kg of silver powder produced English units—pounds per 1,000,000 pounds of silver powder produced	
Chromium	1.41	0.58
Mercury	0.80	0.32
Silver	1.32	0.55
Zinc	4.69	1.96
Manganese	2.18	0.93

(b) There shall be no discharge allowance for process wastewater pollutants from any battery manufacturing operation other than those battery manufacturing operations listed above.

§ 461.75 Pretreatment standards for new sources (PSNS).

(a) Except as provided in § 403.7 any new source subject to this subpart that introduces pollutants into a publicly owned treatment works must comply with 40 CFR part 403 and achieve the following pretreatment standards for new sources listed below:

(1) Subpart G—Zinc Oxide Formed Anodes—PSNS.

Pollutant or pollutant property	Maximum for any 1 day	Maximum for monthly average
	Metric units—mg/kg of zinc English units—pounds per 1,000,000 pounds of zinc	
Chromium	4.55	1.97
Mercury	2.82	1.19
Silver	4.55	1.97
Zinc	0.87	0.39
Manganese	6.50	4.98

(2) Subpart G—Electrodeposited Anodes—PSNS.

Pollutant or pollutant property	Maximum for any 1 day	Maximum for monthly average
	Metric units—mg/kg of zinc deposited English units—pounds per 1,000,000 pounds of zinc deposited	
Chromium	45.09	19.54
Mercury	27.91	11.81
Silver	45.09	19.54
Zinc	8.59	3.86
Manganese	64.41	49.38

(3) Subpart G—Silver Powder Formed Cathodes—PSNS.

Pollutant or pollutant property	Maximum for any 1 day	Maximum for monthly average
	Metric units—mg/kg of silver applied English units—pounds per 1,000,000 pounds of silver applied	
Chromium	6.24	2.70
Mercury	3.86	1.63
Silver	6.24	2.70
Zinc	1.19	0.53
Manganese	8.91	6.83

(4) Subpart G—Silver Oxide Powder Formed Cathodes—PSNS.

Pollutant or pollutant property	Maximum for any 1 day	Maximum for monthly average
	Metric units—mg/kg of silver applied English units—pounds per 1,000,000 pounds of silver applied	
Chromium	4.17	1.81
Mercury	2.58	1.09
Silver	4.17	1.81
Zinc	0.79	0.36
Manganese	5.96	4.57

(5) Subpart G—Silver Peroxide Cathodes—PSNS.

Pollutant or pollutant property	Maximum for any 1 day	Maximum for monthly average
	Metric units—mg/kg of silver applied English units—pounds per 1,000,000 pounds of silver applied	
Chromium	1.00	0.43
Mercury	0.62	0.26
Silver	1.00	0.43
Zinc	0.19	0.09
Manganese	1.43	1.09

(6) Subpart G—Nickel Impregnated Cathodes —PSNS.

Pollutant or pollutant property	Maximum for any 1 day	Maximum for monthly average
	Metric units—mg/kg of nickel applied English units—pounds per 1,000,000 pounds of nickel applied	
Chromium	42.0	18.2
Mercury	26.0	11.0
Nickel	42.0	18.2
Silver	42.0	18.2
Zinc	8.0	3.6
Manganese	60.0	46.0

(7) Subpart G—Miscellaneous Wastewater Streams—PSNS.

Pollutant or pollutant property	Maximum for any 1 day	Maximum for monthly average
	Metric units—mg/kg of cells produced English units—pounds per 1,000,000 pounds of cells produced	
Chromium	0.27	0.12
Cyanide	0.039	0.016
Mercury	0.17	0.07
Nickel	0.27	0.12
Silver	0.27	0.12
Zinc	0.05	0.02
Manganese	0.39	0.30

(8) Subpart G—Silver Etch—PSNS.

Pollutant or pollutant property	Maximum for any 1 day	Maximum for monthly average
	Metric units—mg/kg of silver processed English units—pounds per 1,000,000 pounds of silver processed	
Chromium	1.56	0.68
Mercury	0.97	0.41
Silver	1.56	0.68
Zinc	0.30	0.13
Manganese	2.23	1.71

(9) Subpart G—Silver Peroxide Production—PSNS.

Pollutant or pollutant property	Maximum for any 1 day	Maximum for monthly average
	Metric units—mg/kg of silver peroxide produced English units—pounds per 1,000,000 pounds of silver peroxide produced	
Chromium	1.66	0.72
Mercury	1.03	0.44
Silver	1.66	0.72
Zinc	0.32	0.14
Manganese	2.37	1.82

(10) Subpart G—Silver Powder Production—PSNS.

Pollutant or pollutant property	Maximum for any 1 day	Maximum for monthly average
	Metric units—mg/kg of silver powder produced English units—pounds per 1,000,000 pounds of silver powder produced	
Chromium	0.67	0.29
Mercury	0.42	0.18
Silver	0.67	0.29
Zinc	0.13	0.06
Manganese	0.96	0.74

(b) There shall be no discharge allowance for process wastewater pollutants from any battery manufacturing operation other than those battery manufacturing operations listed above.

[49 FR 9134, Mar. 9, 1984; 49 FR 13879, Apr. 9, 1984]

PART 463—PLASTICS MOLDING AND FORMING POINT SOURCE CATEGORY

GENERAL PROVISIONS

Sec.
463.1 Applicability.
463.2 General definitions.
463.3 Monitoring and reporting requirements.

Subpart A—Contact Cooling and Heating Water Subcategory

463.10 Applicability; description of the contact cooling and heating water subcategory.
463.11 Specialized definitions.
463.12 Effluent limitations guidelines representing the degree of effluent reduction attainable by the application of the best practicable control technology currently available.
463.13 Effluent limitations guidelines representing the degree of effluent reduction attainable by the application of the best available technology economically achievable.
463.14 New source performance standards.
463.15 Pretreatment standards for existing sources.
463.16 Pretreatment standards for new sources.
463.17 Effluent limitations guidelines representing the degree of effluent reduction attainable by the application of the best conventional pollutant control technology.

Subpart B—Cleaning Water Subcategory

463.20 Applicability; description of the cleaning water subcategory.
463.21 Specialized definitions.
463.22 Effluent limitations guidelines representing the degree of effluent reduction attainable by the application of the best practicable control technology currently available.
463.23 Effluent limitations guidelines representing the degree of effluent reduction attainable by the application of the best available technology economically achievable.
463.24 New source performance standards.
463.25 Pretreatment standards for existing sources.
463.26 Pretreatment for new sources.
463.27 Effluent limitations guidelines representing the degree of effluent reduction attainable by the application of the best conventional pollutant control technology. [Reserved]

Subpart C—Finishing Water Subcategory

463.30 Applicability; description of the finishing water subcategory.
463.31 Specialized definitions.
463.32 Effluent limitations guidelines representing the degree of effluent reduction attainable by the application of the best practicable control technology currently available.
463.33 Effluent limitations guidelines representing the degree of effluent reduction attainable by the application of the best available technology economically achievable.
463.34 New source performance standards.
463.35 Pretreatment standards for existing sources.
463.36 Pretreatment standards for new sources.
463.37 Effluent limitations guidelines representing the degree of effluent reduction attainable by the application of the best conventional pollutant control technology. [Reserved]

AUTHORITY: Secs. 301, 304 (b), (c), (e), and (g), 306 (b) and (c), 307, 308, and 501, Clean Water Act (Federal Water Pollution Control Act Amendments of 1972, as amended by Clean Water Act of 1977) (the ''Act''); 33 U.S.C. 1311, 1314 (b), (c), (e) and (g), 1316 (b) and (c), 1317 (b) and (c), 1318, and 1361; 86 Stat. 816, Pub. L. 92–500; 91 Stat. 1567, Pub. L. 95–217.

SOURCE: 49 FR 49047, Dec. 17, 1984, unless otherwise noted.

GENERAL PROVISIONS

§ 463.1 Applicability.

(a) This part applies to any plastics molding and forming process that discharges or may discharge pollutants to waters of the United States or that introduces pollutants into a publicly owned treatment works. Plastics molding and forming processes include processes that blend, mold, form, or otherwise process plastic materials into intermediate or final plastic products. They include commonly recognized processes such as extrusion, molding, coating and laminating, thermoforming, calendering, casting, foaming, cleaning, and finishing.

(b) Plastics molding and forming processes (e.g., extrusion and pelletizing) used by plastics resin manufacturers to process crude intermediate plastic material for shipment off-site are excluded from this regulation and regulated under the organic chemicals, plastics, and synthetic fibers category. Plastics molding and forming processes used by plastic resin manufacturers to process crude intermediate plastic materials, which are further processed on-site into intermediate or final plastics products in molding and forming processes, are controlled by the effluent limitations guidelines and standards for the plastics molding and forming category in this part.

(c) Processes that coat a plastic material onto a substrate may fall within the definition of electroplating and metal finishing as defined in 40 CFR parts 413 and 433. These coating processes are excluded from the effluent limitations guidelines and standards for the electroplating and metal finishing point source categories and are subject to the plastics molding and forming regulation in this part.

(d) Coating of plastic material onto a formed metal substrate is also covered by the plastics molding and forming effluent limitations guidelines and standards and is not covered by the specific metal forming guidelines such as aluminum forming (40 CFR part 467), copper forming (40 CFR part 468), and nonferrous metals forming (40 CFR part 471). However, the plastics molding and forming effluent limitations guidelines and standards in this part apply only to the coating process; the metal forming operations are subject to the specific metal forming regulation.

(e) Research and development laboratories that produce plastic products using a plastics molding and forming process are subject to the effluent limitations guidelines and standards in this part if the plastics molding and forming process discharges process water. The mass of plastic product produced in the plastics molding and forming process is not considered when determining the applicability of the plastics molding and forming regulation in this part to plastics molding and forming processes at research and development laboratories.

(f) Chemical and thermal reticulation processes for polyurethane foam are not subject to the effluent limitations guidelines and standards in this part. Water used in those processes is not considered to be process water as defined in this regulation. Processes used to further mold or form the reticulated foam are subject, however, to this regulation if they discharge process water.

(g) Processes used to regenerate cellulose and to produce a product (e.g., rayon) from the regenerated cellulose are not subject to the effluent limitations guidelines and standards in this part. Processes that mold or form cellulose derivatives (e.g., cellulose acetate) are subject to the effluent limitations guidelines and standards in this part if they discharge process water.

[49 FR 49047, Dec. 17, 1984; 50 FR 18249, Apr. 30, 1985]

§ 463.2 General definitions.

In addition to the definitions set forth in 40 CFR part 401, the following definitions apply to this part:

(a) ''Plastics molding and forming'' is a manufacturing process in which plastic materials are blended, molded, formed, or otherwise processed into intermediate or final products.

(b) ''Process water'' is any raw, service, recycled, or reused water that contacts the plastic product or contacts shaping equipment surfaces such as molds and mandrels that are, or have been, in contact with the plastic product.

(c) ''Contact cooling and heating water'' is process water that contacts the raw materials or plastic product for the purpose of heat transfer during the plastics molding and forming process.

(d) ''Cleaning water'' is process water used to clean the surface of an intermediate or final plastic product or to clean the surfaces of equipment used in plastics molding and forming that contact an intermediate or final plastic product. It includes water used in both the detergent wash and rinse cycles of a cleaning process.

(e) ''Finishing'' water is processed water used to remove waste plastic material generated during a finishing process or to lubricate a plastic product during a finishing process. It includes water used to machine or to assemble intermediate or final plastic products.

(f) ''Plastic material'' is a synthetic organic polymer (i.e., a thermoset polymer, a thermoplastic polymer, or a combination of a natural polymer and a thermoset or thermoplastic polymer) that is solid in its final form and that was shaped by flow. The material can be either a homogeneous polymer or a polymer combined with fillers, plasticizers, pigments, stabilizers, or other additives.

(g) ''Crude intermediate plastic material'' is plastic material formulated in an on-site polymerization process.

(h) ''Mass of pollutant that can be discharged'' is the pollutant mass calculated by multiplying the pollutant concentration times the average process water usage flow rate.

§ 463.3 Monitoring and reporting requirements.

The ''monthly average'' regulatory values shall be the basis for the monthly average effluent limitations guidelines and standards in direct discharge permits. Compliance with the monthly average effluent limitations guidelines and standards is required regardless of the number of samples analyzed and averaged.

Subpart A—Contact Cooling and Heating Water Subcategory

§ 463.10 Applicability; description of the contact cooling and heating water subcategory.

This subpart applies to discharges of pollutants from processes in the contact cooling and heating water subcategory to waters of the United States and the introduction of such pollutants into publicly owned treatment works. Processes in the contact cooling and heating water subcategory are processes where process water comes in contact with plastic materials or plastic products for the purpose of heat transfer during plastics molding and forming.

§ 463.11 Specialized definitions.

For the purpose of this subpart:

(a) The ''average process water usage flow rate'' of a contact cooling and heating water process in liters per day is equal to the volume of process water (liters) used per year by a process divided by the number of days per year the process operates. The ''average process water usage flow rate'' for a plant with more than one plastics molding and forming process that uses contact cooling and heating water is the sum of the ''average process water usage flow rates'' for the contact cooling and heating processes.

(b) The ''volume of process water used per year'' is the volume of process water that flows through a contact cooling and heating water process and comes in contact with the plastic product over a period of one year.

§ 463.12 Effluent limitations guidelines representing the degree of effluent reduction attainable by the application of the best practicable control technology currently available.

Except as provided in 40 CFR 125.30 through 125.32, any existing point source subject to this subpart must achieve the effluent limitations guidelines (i.e., mass of pollutant discharged) representing the degree of effluent reduction attainable by the application of the best practicable control technology currently available,

which are calculated by multiplying the average process water usage flow rate for the contact cooling and heating water processes at a point source times the following pollutant concentrations:

SUBPART A

[Contact cooling and heating water]

Concentration used to calculate BPT effluent limitations	
Pollutant or pollutant property	Maximum for any 1 day (mg/l)
BOD5	26
Oil and grease	29
TSS	19
pH	(1)

[1] Within the range of 6.0 to 9.0 at all times.

The permit authority will obtain the average process water usage flow rate for the contact cooling and heating water processes from the permittee.

§ 463.13 Effluent limitations guidelines representing the degree of effluent reduction attainable by the application of the best available technology economically achievable.

(a) The BAT effluent limitations guidelines for bis(2-ethylhexyl) phthalate are reserved.

(b) The Agency has determined that, with the exception of bis(2-ethylhexyl) phthalate, there are no toxic pollutants in treatable concentrations in contact cooling and heating water. Accordingly, the Agency is promulgating BAT effluent limitations guidelines equal to the BPT effluent limitations guidelines.

§ 463.14 New source performance standards.

(a) NSPS for bis(2-ethylhexyl) phthalate are reserved.

(b) Any new source subject to this subpart must achieve performance standards (i.e., mass of pollutant discharged), which are calculated by multiplying the average process water usage flow rate for the contact cooling and heating water processes at a new source times the following pollutant concentrations:

SUBPART A

[Contact cooling and heating water]

Concentration used to calculate NSPS	
Pollutant or pollutant property	Maximum for any 1 day (mg/l)
BOD5	26
Oil and grease	29
TSS	19
pH	(1)

[1] Within the range of 6.0 to 9.0 at all times.

The permit authority will obtain the average process water usage flow rate for the new source contact cooling and heating water processes from the permittee.

§ 463.15 Pretreatment standards for existing sources.

(a) PSES for bis(2-ethylhexyl) phthalate are reserved.

(b) Any existing source subject to this subpart that introduces pollutants into a publicly owned treatment works must comply with 40 CFR Part 403—General Pretreatment Regulations.

§ 463.16 Pretreatment standards for new sources.

(a) PSNS for bis(2-ethylhexyl)phthalate are reserved.

(b) Any new source subject to this subpart that introduces pollutants into a publicly owned treatment works must comply with 40 CFR Part 403—General Pretreatment Regulations.

§ 463.17 Effluent limitations guidelines representing the degree of effluent reduction attainable by the application of the best conventional pollutant control technology.

Except as provided in 40 CFR 125.30 through 125.32, any existing point source subject to this subpart must achieve the effluent limitations guidelines (i.e., mass of pollutant discharged) representing the degree of effluent reduction attainable by the application of the best conventional pollutant control technology, which are calculated by multiplying the average process water usage flow rate for the contact cooling and heating water processes at a point source times the following pollutant concentrations:

SUBPART A

[Contact cooling and heating water]

Concentration used to calculate BCT effluent limitations	
Pollutant or pollutant property	Maximum for any 1 day (mg/l)
BOD5	26
Oil and grease	29
TSS	19
pH	(1)

[1] Within the range of 6.0 to 9.0 at all times.

The permit authority will obtain the average process water usage flow rate for the contact cooling and heating water processes from the permittee.

Subpart B—Cleaning Water Subcategory

§ 463.20 Applicability; description of the cleaning water subcategory.

This subpart applies to discharges of pollutants from processes in the cleaning water subcategory to waters of the United States and the introduction of such pollutants into publicly owned treatment works. Processes in the cleaning water subcategory are processes where water comes in contact with the plastic product for the purpose of cleaning the surface of the product and where water comes in contact with shaping equipment, such as molds and mandrels, that contact the plastic material for the purpose of cleaning the equipment surfaces.

§ 463.21 Specialized definitions.

For the purpose of this subpart:

(a) The ''average process water usage flow rate'' of a cleaning water process in liters per day is equal to the volume of process water (liters) used per year by a process divided by the number of days per year the process operates. The ''average process water usage flow rate'' for a plant with more than one plastics molding and forming process that uses cleaning water is the sum of the ''average process water usage flow rates'' for the cleaning processes.

(b) The ''volume of process water used per year'' is the volume of process water that flows through a cleaning process and comes in contact with the plastic product over a period of one year.

§ 463.22 Effluent limitations guidelines representing the degree of effluent reduction attainable by the application of the best practicable control technology currently available.

Except as provided in 40 CFR 125.30 through 125.32, any existing point source subject to this subpart must achieve the effluent limitations guidelines (i.e., mass of pollutant discharged) representing the degree of effluent reduction attainable by the application of the best practicable control technology currently available, which are calculated by multiplying the average process water usage flow rate for the cleaning water processes at a point source times the following pollutant concentrations:

SUBPART B

[Cleaning water]

Concentration used to calculate BPT effluent limitations		
Pollutant or pollutant property	Maximum for any 1 day (mg/l)	Maximum for monthly average (mg/l)
BOD5	49	22
Oil and grease	71	17
TSS	117	36
pH	(1)	(1)

[1] Within the range of 6.0 to 9.0 at all times.

The permit authority will obtain the average process water usage flow rate for the cleaning water processes from the permittee.

§ 463.23 Effluent limitations guidelines representing the degree of effluent reduction attainable by the application of the best available technology economically achievable.

The Agency has determined that there are insignificant quantities of toxic pollutants in cleaning process wastewaters after compliance with applicable BPT effluent limitations guidelines. Accordingly, because the BPT level of treatment provides adequate control, the Agency is establishing BAT effluent limitations guidelines equal to the BPT effluent limitations guidelines.

§ 463.24 New source performance standards.

Any new source subject to this subpart must achieve performance standards (i.e., mass of pollutant discharged)

calculated by multiplying the average process water usage flow rate for cleaning processes at a new source times the following pollutant concentrations:

SUBPART B

[Cleaning water]

Concentration used to calculate NSPS		
Pollutant or pollutant property	Maximum for any 1 day (mg/l)	Maximum for monthly average (mg/l)
BOD5	49	22
Oil and Grease	71	17
TSS	117	36
pH	(1)	(1)

[1] Within the range of 6.0 to 9.0 at all times.

The permit authority will obtain the average process water usage flow rate for the new source cleaning water processes from the permittee.

§ 463.25 Pretreatment standards for existing sources.

Any existing source subject to this subpart that introduces pollutants into a publicly owned treatment works must comply with 40 CFR Part 403—General Pretreatment Regulations.

§ 463.26 Pretreatment for new sources.

Any new source subject to this subpart that introduces pollutants into a publicly owned treatment works must comply with 40 CFR Part 403—General Pretreatment Regulations.

§ 463.27 Effluent limitations guidelines representing the degree of effluent reduction attainable by the application of the best conventional pollutant control technology. [Reserved]

Subpart C—Finishing Water Subcategory

§ 463.30 Applicability; description of the finishing water subcategory.

This subpart applies to discharges of pollutants from processes in the finishing water subcategory to waters of the United States and the introduction of such pollutants into publicly owned treatment works. Processes in the finishing water subcategory are processes where water comes in contact with the plastic product during finishing.

§ 463.31 Specialized definitions.

For the purpose of this subpart:

(a) The ''average process water usage flow rate'' of a finishing water process in liters per day is equal to the volume of process water (liters) used per year by a process divided by the number of days per year the process operates. The ''average process water usage flow rate'' for a plant with more than one plastics molding and forming process that uses finishing water is the sum of the ''average process water usage flow rates'' for the finishing processes.

(b) The ''volume of process water used per year'' is the volume of process water that flows through a finishing water process and comes in contact with the plastics product over a period of one year.

§ 463.32 Effluent limitations guidelines representing the degree of effluent reduction attainable by the application of the best practicable control technology currently available.

Except as provided in 40 CFR 125.30 through 125.32, any existing point source subject to this subpart must achieve the effluent limitations guidelines (i.e., mass of pollutant discharged) representing the degree of effluent reduction attainable by the application of the best practicable control technology currently available, which are calculated by multiplying the average process water usage flow rate for the finishing water processes at a point source times the following pollutant concentrations:

SUBPART C

[Finishing water]

Concentration used to calculate BPT effluent limitations		
Pollutant or pollutant property	Maximum for any 1 day (mg/l)	Maximum for monthly average (mg/l)
TSS	130	37
pH	(1)	(1)

[1] Within the range of 6.0 to 9.0 at all times.

The permit authority will obtain the average process water usage flow rate for the finishing water processes from the permittee.

§ 463.33 Effluent limitations guidelines representing the degree of effluent reduction attainable by the application of the best available technology economically achievable.

(a) The BAT effluent limitations guidelines for bis(2-ethylhexyl) phthalate, di-n-butyl phthalate, and dimethyl phthalate are reserved.

(b) The Agency has determined that, with the exception of bis(2-ethylhexyl) phthalate, di-n-butyl phthalate, and dimethyl phthalate, there are no toxic pollutants in treatable concentrations in finishing waters. Accordingly, the Agency is promulgating BAT effluent limitations guidelines equal to BPT effluent limitations guidelines.

§ 463.34 New source performance standards.

(a) NSPS for bis(2-ethylhexyl) phthalate, di-n-butyl phthalate, and dimethyl phthalate are reserved.

(b) Any new source subject to this subpart must achieve performance standards (i.e., mass of pollutant discharged), which are calculated by multiplying the average process water usage flow rate for the finishing water processes at a new source times the following pollutant concentrations:

SUBPART C

[Finishing water]

Concentration used to calculate NSPS		
Pollutant or pollutant property	Maximum for any 1 day (mg/l)	Maximum for monthly average (mg/l)
TSS	130	37
pH	(1)	(1)

[1] Within the range of 6.0 to 9.0 at all times.

The permit authority will obtain the average process water usage flow rate for the new source finishing water processes from the permittee.

§ 463.35 Pretreatment standards for existing sources.

(a) PSES for bis(2-ethylhexyl) phthalate, di-n-butyl phthalate, and dimethyl phthalate are reserved.

(b) Any existing source subject to this subpart that introduces pollutants into a publicly owned treatment works must comply with 40 CFR Part 403—General Pretreatment Regulations.

§ 463.36 Pretreatment standards for new sources.

(a) PSNS for bis(2-ethylhexyl) phthalate, di-n-butyl phthalate, and dimethyl phthalate are reserved.

(b) Any new source subject to this subpart that introduces pollutants into a publicly owned treatment works must comply with 40 CFR Part 403—General Pretreatment Regulations.

§ 463.37 Effluent limitations guidelines representing the degree of effluent reduction attainable by the application of the best conventional pollutant control technology. [Reserved]

PART 464—METAL MOLDING AND CASTING POINT SOURCE CATEGORY

GENERAL PROVISIONS

Sec.
464.01 Applicability.
464.02 General definitions.
464.03 Monitoring and reporting requirements.
464.04 Compliance date for PSES.

Subpart A—Aluminum Casting Subcategory

464.10 Applicability; description of the aluminum casting subcategory.
464.11 Specialized definitions.
464.12 Effluent limitations guidelines representing the degree of effluent reduction attainable by the application of the best practicable control technology currently available.
464.13 Effluent limitations guidelines representing the degree of effluent reduction attainable by the application of the best available technology economically achievable.
464.14 New source performance standards.
464.15 Pretreatment standards for existing sources.
464.16 Pretreatment standards for new sources.
464.17 Effluent limitations guidelines representing the degree of effluent reduction attainable by the application of the best conventional pollutant control technology. [Reserved]

Subpart B—Copper Casting Subcategory

464.20 Applicability; description of the copper casting subcategory.
464.21 Specialized definitions.
464.22 Effluent limitations guidelines representing the degree of effluent reduction attainable by the application of the best

practicable control technology currently available.
464.23 Effluent limitations guidelines representing the degree of effluent reduction attainable by the application of the best available technology economically achievable.
464.24 New source performance standards.
464.25 Pretreatment standards for existing sources.
464.26 Pretreatment standards for new sources.
464.27 Effluent limitations guidelines representing the degree of effluent reduction attainable by the application of the best conventional pollutant control technology. [Reserved]

Subpart C—Ferrous Casting Subcategory

464.30 Applicability; description of the ferrous casting subcategory.
464.31 Specialized definitions.
464.32 Effluent limitations guidelines representing the degree of effluent reduction attainable by the application of the best practicable control technology currently available.
464.33 Effluent limitations guidelines representing the degree of effluent reduction attainable by the application of the best available technology economically achievable.
464.34 New source performance standards.
464.35 Pretreatment standards for existing sources.
464.36 Pretreatment standards for new sources.
464.37 Effluent limitations guidelines representing the degree of effluent reduction attainable by the application of the best conventional pollutant control technology. [Reserved]

Subpart D—Zinc Casting Subcategory

464.40 Applicability; description of the zinc casting subcategory.
464.41 Specialized definitions.
464.42 Effluent limitations guidelines representing the degree of effluent reduction attainable by the application of the best practicable control technology currently available.
464.43 Effluent limitations guidelines representing the degree of effluent reduction attainable by the application of the best available technology economically achievable.
464.44 New source performance standards.
464.45 Pretreatment standards for existing sources.
464.46 Pretreatment standards for new sources.
464.47 Effluent limitations guidelines representing the degree of effluent reduction attainable by the application of the best conventional pollutant control technology. [Reserved]

AUTHORITY: Secs. 301, 304 (b), (c), (e), and (g), 306 (b) and (c), 307, 308, and 501 of the Clean Water Act (Federal Water Pollution Control Act Amendments of 1972, as amended by the Clean Water Act of 1977) (the ''Act''); 33 U.S.C. 1311, 1314 (b), (c), (e) and (g), 1316 (b) and (c), 1317 (b) and (c), 1318, and 1361; 86 Stat. 816, Pub. L. 92–500; 91 Stat. 1567, Pub. L. 95–217.

SOURCE: 50 FR 45247, Oct. 30, 1985, unless otherwise noted.

GENERAL PROVISIONS

§ 464.01 Applicability.

(a) This part applies to metal molding and casting facilities that discharge or may discharge pollutants to waters of the United States or that introduce pollutants into a publicly owned treatment works.

§ 464.02 General definitions.

In addition to the definitions set forth in 40 CFR part 401, the following definitions apply to this part:

(a) *Aluminum casting*. The remelting of aluminum or an aluminum alloy to form a cast intermediate or final product by pouring or forcing the molten metal into a mold, except for ingots, pigs, or other cast shapes related to nonferrous (primary and secondary) metals manufacturing (40 CFR part 421) and aluminum forming (40 CFR part 467). Processing operations following the cooling of castings not covered under aluminum forming, except for grinding scrubber operations which are covered here, are covered under the electroplating and metal finishing point source categories (40 CFR parts 413 and 433).

(b) *Copper casting*. The remelting of copper or a copper alloy to form a cast intermediate or final product by pouring or forcing the molten metal into a mold, except for ingots, pigs, or other cast shapes related to nonferrous (primary and secondary) metals manufacturing (40 CFR part 421). Also excluded are casting of beryllium alloys in which beryllium is present at 0.1 or greater percent by weight and precious metals alloys in which the precious metal is present at 30 or greater percent by weight. Except for grinding scrubber operations which are covered

here, processing operations following the cooling of castings are covered under the electroplating and metal finishing point source categories (40 CFR parts 413 and 433).

(c) *Ferrous casting*. The remelting of ferrous metals to form a cast intermediate or finished product by pouring the molten metal into a mold. Except for grinding scrubber operations which are covered here, processing operations following the cooling of castings are covered under the electroplating and metal finishing point source categories (40 CFR parts 413 and 433).

(d) *Zinc casting*. The remelting of zinc or zinc alloy to form a cast intermediate or final product by pouring or forcing the molten metal into a mold, except for ingots, pigs, or other cast shapes related to nonferrous (primary) metals manufacturing (40 CFR part 421) and nonferrous metals forming (40 CFR part 471). Processing operations following the cooling of castings not covered under nonferrous metals forming are covered under the electroplating and metal finishing point source categories (40 CFR parts 413 and 433).

(e) *POTW* shall mean ''publicly owned treatment works.''

(f) A *non-continuous discharger* is a plant which does not discharge pollutants during specific periods of time for reasons other than treatment plant upset, such periods being at least 24 hours in duration. A typical example of a non-continuous discharger is a plant where wastewaters are routinely stored for periods in excess of 24 hours to be treated on a batch basis. For non-continuous discharging direct discharging plants, NPDES permit authorities shall apply the mass-based annual average effluent limitations or standards and the concentration-based maximum day and maximum for monthly average effluent limitations or standards established in the regulations. POTWs may elect to establish concentration-based standards for non-continuous discharges to POTWs. They may do so by establishing concentration-based pretreatment standards equivalent to the mass-based standards provided in §§ 464.15, 464.16, 464.25, 464.26, 464.35, 464.36, 464.45, and 464.46 of the regulations. Equivalent concentration standards may be established by following the procedures outlined in § 464.03(b).

(g) *Total phenols* shall mean total phenolic compounds as measured by the procedure listed in 40 CFR part 136 (distillation followed by colorimetric—4AAP).

(h) *Sm^3* shall mean standard cubic meters.

(i) *SCF* shall means standard cubic feet.

(j) *Total toxic organics* (TTO) shall mean the sum of the mass of each of the toxic organic compounds which are found at a concentration greater than 0.010 mg/l. The specialized definitions for each subpart contain a discrete list of toxic organic compounds comprising TTO for each process segment in which TTO is regulated.

§ 464.03 Monitoring and reporting requirements.

(a) As an alternative to monitoring for TTO (total toxic organics), an indirect discharging plant may elect to monitor for Oil and Grease instead. Compliance with the Oil and Grease standard shall be considered equivalent to complying with the TTO standard. Alternate Oil and Grease standards are provided as substitutes for the TTO standards provided in §§ 464.15, 464.16, 464.25, 464.26, 464.35, 464.36, 464.45, and 464.46.

(b) POTWs may establish concentration standards rather than mass standards, but must ensure that the concentration standards are exactly equivalent to the mass-based standards provided in §§ 464.15, 464.16, 464.25, 464.26, 464.35, 464.36, 464.45, and 464.46. Equivalent concentration standards may be determined by multiplying the mass-based standards included in the regulations by an appropriate measurement of average production, raw material usage, or air scrubber flow (kkg of metal poured, kkg of sand reclaimed, or standard cubic meters of air scrubbed) and dividing by an appropriate measure of average discharge flow to the POTW, taking into account the proper conversion factors to ensure that the units (mg/l) are correct.

(c) The ''monthly average'' regulatory values shall be the basis for the monthly average effluent limitations

guidelines and standards in direct discharge permits and for pretreatment standards. Compliance with the monthly average effluent limitations guidelines and standards is required regardless of the number of samples analyzed and averaged.

§ 464.04 Compliance date for PSES.

The compliance date of PSES is October 31, 1988.

Subpart A—Aluminum Casting Subcategory

§ 464.10 Applicability; description of the aluminum casting subcategory.

The provisions of this subpart are applicable to discharges to waters of the United States and to the introduction of pollutants into publicly owned treatment works resulting from aluminum casting operations as defined in § 464.02(a).

§ 464.11 Specialized definitions.

For the purpose of this subpart:

(a) *Total toxic organics (TTO).* TTO is a regulated parameter under PSES (§ 464.15) and PSNS (§ 464.16) for the aluminum subcategory and is comprised of a discrete list of toxic organic pollutants for each process segment where it is regulated, as follows:

(1) Casting Quench (§ 464.15(b) and § 464.16(b)):

4. benzene
21. 2,4,6-trichlorophenol
22. Para-chloro meta-cresol
23. chloroform (trichloromethane)
34. 2,4-dimethylphenol
39. fluoranthene
44. methylene chloride (dichloromethane)
65. phenol
66. bis(2-ethylhexyl) phthalate
67. butyl benzyl phthalate
84. pyrene
85. tetrachloroethylene
87. trichloroethylene

(2) Die Casting (§ 464.15(c) and § 464.16(c)):

1. acenaphthene
4. benzene
7. chlorobenzene
11. 1,1,1-trichloroethane
21. 2,4,6-trichlorophenol
22. para-chloro meta-cresol
23. chloroform (trichloromethane)
34. 2,4-dimethylphenol
39. fluoranthene
44. methylene chloride (dichloromethane)
55. naphthalene
65. phenol
66. bis(2-ethylhexyl) phthalate
67. butyl benzyl phthalate
68. di-n-butyl phthalate
70. diethyl phthalate
72. benzo (a)anthracene (1,2-benzanthracene)
73. benzo (a)pyrene (3,4-benzopyrene)
76. chrysene
78. anthracene
80. fluorene
81. phenanthrene
84. pyrene
85. tetrachloroethylene
86. toluene

(3) Dust Collection Scrubber (§ 464.15(d) and § 464.16(d)):

1. acenaphthene
21. 2,4,6-trichlorophenol
23. chloroform (trichloromethane)
34. 2,4-dimethylphenol
39. fluoranthene
44. methylene chloride (dichloromethane)
65. phenol
66. bis (2-ethylhexyl) phthalate
68. di-n-butyl phthalate
70. diethyl phthalate
73. benzo (a)pyrene (3,4-benzopyrene)
84. pyrene

(4) Investment Casting (§ 464.15(f) and § 464.16(f)):

11. 1,1,1-trichloroethane
23. chloroform (trichloromethane)
44. methylene chloride (dichloromethane)
66. bis (2-ethylhexyl) phthalate
84. pyrene
85. tetrachloroethylene
87. trichloroethylene

(5) Melting Furnace Scrubber (§ 464.15(g) and § 464.16(g)):

1. acenaphthene
21. 2,4,6-trichlorophenol
23. chloroform (trichloromethane)
34. 2,4-dimethylphenol
39. fluoranthene
44. methylene chloride (dichloromethane)
65. phenol
66. bis (2-ethylhexyl) phthalate
68. di-n-butyl phthalate
70. diethyl phthalate
73. benzo (a)pyrene (3,4-benzopyrene)
84. pyrene

(6) Mold Cooling (§ 464.15(h) and § 464.16(h)):

4. benzene
21. 2,4,6-trichlorophenol
22. para-chloro meta-cresol
23. chloroform (trichloromethane)
34. 2,4-dimethylphenol
39. fluoranthene

44. methylene chloride
65. phenol
66. bis(2-ethylhexyl) phthalate
67. butyl benzyl phthalate
84. pyrene
85. tetrachloroethylene
87. trichloroethylene

§ 464.12 Effluent limitations guidelines representing the degree of effluent reduction attainable by the application of the best practicable control technology currently available.

Except as provided in 40 CFR 125.30 through 125.32, any existing point source subject to this subpart must achieve the following effluent limitations representing the degree of effluent reduction attainable by the application of the best practicable control technology currently available, except that non-continuous dischargers shall not be subject to the maximum day and maximum for monthly average mass (kg/1,000 kkg or lb/million lb of metal poured; kg/62.3 million Sm^3 or lb/billion SCF of air scrubbed) effluent limitations for copper, lead, zinc, total phenols, oil and grease, and TSS. For non-continuous dischargers, annual average mass limitations and maximum day and maximum for monthly average concentration (mg/l) limitations shall apply. Concentration limitation and annual average mass limitation shall only apply to non-continuous dischargers.

(a) *Casting Cleaning Operations.*

BPT EFFLUENT LIMITATIONS

Pollutant or pollutant property	Maximum for any 1 day	Maximum for monthly average
	kg/1,000 kkg (pounds per million pounds) of metal poured	
Copper (T)	0.0771	0.0421
Lead (T)	0.0791	0.039
Zinc (T)	0.114	0.0431
Oil & grease	3.0	1.0
TSS	3.80	1.50
pH	(1)	(1)

1 Within the range of 7.0 to 10.00 at all times.

	Maximum for any 1 day	Maximum for monthly average	Annual average[1]
	(mg/l)[2]	(mg/l)[2]	
Copper (T)	0.77	0.42	0.017
Lead (T)	0.79	0.39	0.022
Zinc (T)	1.14	0.43	0.027
Oil & grease	30	10	0.501
TSS	38	15	1.0
pH	(3)	(3)	(3)

1 kg/1,000 kkg (pounds per million pounds) of metal poured.
2 These concentrations must be multiplied by the ratio of (12/x) where x is the actual normalized process wastewater flow (in gallons per 1,000 pounds of metal poured) for a specific plant.
3 Within the range of 7.0 to 10.0 at all times.

(b) *Casting Quench Operations.*

BPT EFFLUENT LIMITATIONS

Pollutant or pollutant property	Maximum for any 1 day	Maximum for monthly average
	kg/1,000 kkg (pounds per million pounds) of metal poured	
Copper (T)	0.0093	0.0051
Lead (T)	0.0096	0.0047
Zinc (T)	0.0138	0.0052
Oil & grease	0.363	0.121
TSS	0.46	0.182
pH	(1)	(1)

1 Within the range of 7.0 to 10.0 at all times.

	Maximum for any 1 day	Maximum for monthly average	Annual average[1]
	(mg/l)[2]	(mg/l)[2]	
Copper (T)	0.77	0.42	0.0021
Lead (T)	0.79	0.39	0.0027
Zinc (T)	1.14	0.43	0.0033
Oil & grease	30	10	0.0605
TSS	38	15	0.121
pH	(3)	(3)	(3)

[1] kg/1,000 kkg (pounds per million pounds) of metal poured.
[2] These concentrations must be multiplied by the ratio of (1.45/x) where x is the actual normalized process wastewater flow (in gallons per 1,000 pounds of metal poured) for a specific plant.
[3] Within the range of 7.0 to 10.0 at all times.

(c) *Die Casting Operations.*

BPT EFFLUENT LIMITATIONS

Pollutant or pollutant property	Maximum for any 1 day	Maximum for monthly average
	kg/1,000 kkg (pounds per million pounds) of metal poured	
Copper (T)	0.0066	0.0036
Lead (T)	0.0068	0.0034
Zinc (T)	0.0098	0.0037
Total Phenols	0.0074	0.0026
Oil & Grease	0.259	0.0864
TSS	0.33	0.13
pH	(1)	(1)

[1] With the range of 7.0 to 10.0 at all times.

	Maximum for any 1 day	Maximum for monthly average	Annual average[1]
	(mg/l) (2)	(mg/l) (2)	
Copper (T)	0.77	0.42	0.0015
Lead (T)	0.79	0.39	0.0019
Zinc (T)	1.14	0.43	0.0023
Total Phenols	0.86	0.3	0.0017
Oil & Grease	30	10	0.0432
TSS	38	15	0.0864
pH	(3)	(3)	(3)

[1] kg/1,000 kkg (pounds per million pounds) of metal poured.
[2] These concentrations must be multiplied by the ratio of (1.04/x) where x is the actual normalized process wastewater flow (in gallons per 1,000 pounds of metal poured) for a specific plant.
[3] Within the range of 7.0 to 10.0 at all times,

(d) *Dust Collection Scrubber Operations.*

BPT EFFLUENT LIMITATIONS

Pollutant or pollutant property	Maximum for any 1 day	Maximum for monthly average
	kg/62.3 million Sm^3 (pounds per billion SCF) of air scrubbed	
Copper (T)	0.231	0.126
Lead (T)	0.237	0.117
Zinc (T)	0.343	0.129
Total Phenols	0.258	0.09
Oil & Grease	9.01	3.0
TSS	11.4	4.51
pH	(1)	(1)

[1] Within the range of 7.0 to 10.0 at all times.

	Maximum for any 1 day	Maximum for monthly average	Annual average[1]
	(mg/l)[2]	mg/l)[2]	
Copper (T)	0.77	0.42	0.0511
Lead (T)	0.79	0.39	0.0661
Zinc (T)	1.14	0.43	0.0811
Total Phenols	0.86	0.3	0.0601
Oil & Grease	30	10	1.5
TSS	38	15	3.0
pH	(3)	(3)	(3)

[1] kg/62.3 million SM^3 (pounds per billion SCF) of air scrubbed.
[2] These concentrations must be multiplied by the ratio of (0.036/x) where x is the actual normalized process wastewater flow (in gallons per 1,000 SCF of air scrubbed) for a specific plant.
[3] Within the range of 7.0 to 10.0 at all times.

(e) *Grinding Scrubber Operations.* No discharge of process wastewater pollutants to navigable waters.

(f) *Investment Casting.*

BPT EFFLUENT LIMITATIONS

Pollutant or pollutant property	Maximum for any 1 day	Maximum for monthly average
	kg/1,000 kkg (pounds per million pounds) of metal poured	
Copper (T)	8.48	4.63
Lead (T)	8.7	4.3
Zinc (T)	12.6	4.74
Oil and grease	330	110
TSS	419	165
pH	(1)	(1)

[1] Within the range of 7.0 to 10.0 at all times.

	Maximum for any 1 day	Maximum for monthly average	Annual average[1]
	(mg/l)[2]	(mg/l)[2]	
Copper (T)	0.77	0.42	1.87
Lead (T)	0.79	0.39	2.42
Zinc (T)	1.14	0.43	2.97
Oil and grease	30	10	55.1
TSS	38	15	110
pH	(3)	(3)	(3)

[1] kg/1,000 kkg (pounds per million pounds) of metal poured.
[2] These concentrations must be multiplied by the ratio of (1,320/x) where x is the actual normalized process wastewater flow (in gallons per 1,000 pounds of metal poured) for a specific plant.
[3] Within the range of 7.0 to 10.0 at all times.

(g) *Melting Furnace Scrubber Operations.*

BPT EFFLUENT LIMITATIONS

Pollutant or pollutant property	Maximum for any 1 day	Maximum for monthly average
	kg/62.3 million per billion Sm³ (pounds SCF) of air scrubbed	
Copper (T)	3.01	1.64
Lead (T)	3.09	1.52
Zinc (T)	4.45	1.68
Total phenols	3.36	1.17
Oil and grease	117	39.1
TSS	148	58.6
pH	(1)	(1)

[1] Within the range of 7.0 to 10.0 at all times.

	Maximum for any 1 day	Maximum for monthly average	Annual average[1]
	(mg/l)[2]	(mg/l)[2]	
Copper (T)	0.77	0.42	0.664
Lead (T)	0.79	0.39	0.859
Zinc (T)	1.14	0.43	1.05
Total phenols	0.86	0.3	0.781
Oil and grease	30	10	19.5
TSS	38	15	39.1
pH	(2)	(3)	(3)

[1] kg/62.3 million Sm³ (pounds per billion SCF) of air scrubbed.
[2] These concentrations must be multiplied by the ratio of (0.468/x) where x is the acutal normalized process wastewater flow (in gallons per 1,000 SCF of air scrubbed) for a specific plant.
[3] Within the range of 7.0 to 10.0 at all times.

(h) *Mold Cooling Operations.*

BPT EFFLUENT LIMITATIONS

Pollutant or pollutant property	Maximum for any 1 day	Maximum for monthly average
	kg/1,000 kkg (pounds per million pounds) of metal poured	
Copper (T)	0.297	0.162
Lead (T)	0.305	0.151
Zinc (T)	0.44	0.166
Oil and grease	11.6	3.86
TSS	14.7	5.79
pH	(1)	(1)

[1] Within the range of 7.0 to 10.0 at all times.

	Maximum for any 1 day	Maximum for monthly average	Annual average[1]
	(mg/l)[1]	(mg/)[1]	
Copper (T)	0.77	0.42	0.0656
Lead (T)	0.79	0.39	0.0849
Zinc (T)	1.14	0.43	0.104
Oil and grease	30	10	1.93
TSS	38	15	3.86
pH	(3)	(3)	(3)

[1] kg/1,000 kkg (pounds per million pounds) of metal
[2] These concentrations must be multiplied by the ratio of (46.3/x) where x is the actual normalized process wastewater flow (in gallons per 1,000 pounds of metal poured) for a specific plant.
[3] Within the range of 7.0 to 10.0 at all times.

[50 FR 45247, Oct. 30, 1985; 51 FR 21760, June 16, 1986]

§ 464.13 Effluent limitations guidelines representing the degree of effluent reduction attainable by the application of the best available technology economically achievable.

Except as provided in 40 CFR 125.30 through 125.32, any existing point source subject to this subpart must achieve the following effluent limitations representing the degree of effluent reduction attainable by the application of the best available technology economically achievable, except that non-continuous dischargers shall not be subject to the maximum day and maximum for monthly average mass (kg/1,000 kkg or lb/million lb of metal poured; kg/62.3 million Sm³ or lb/billion SCF of air scrubbed) effluent limitations for copper, lead, zinc, and total phenols. For non-continuous dischargers, annual average mass limitations and maximum day and maximum for monthly average concentration (mg/l) limitations shall apply. Concentration limitations and annual average mass limitations shall only apply to non-continuous dischargers.

(a) *Casting Cleaning Operations.*

BAT EFFLUENT LIMITATIONS

Pollutant or pollutant property	Maximum for any 1 day	Maximum for monthly average
	kg/1,000 kkg (pounds per million pounds) of metal poured	
Copper (T)	0.0771	0.0421
Lead (T)	0.0791	0.039
Zinc (T)	0.114	0.0431

	Maximum for any 1 day	Maximum for monthly average	Annual average [1]
	(mg/l) [2]	(mg/l) [2]	
Copper (T)	0.77	0.42	0.017
Lead (T)	0.79	0.39	0.022
Zinc (T)	1.14	0.43	0.027

[1] kg/1,000 kkg (pounds per million pounds) of metal poured.
[2] These concentrations must be multiplied by the ratio of (12/x) where x is the actual normalized process wastewater flow (in gallons per 1,000 pounds of metal poured) for a specific plant.

(b) *Casting Quench Operations.*

BAT EFFLUENT LIMITATIONS

Pollutant or pollutant property	Maximum for any 1 day	Maximum for monthly average
	kg/1,000 kkg (pounds per million pounds) of metal poured	
Copper (T)	0.0093	0.0051
Lead (T)	0.0096	0.0047
Zinc (T)	0.0138	0.0052

	Maximum for any 1 day	Maximum for monthly average	Annual average [1]
	(mg/l) [2]	(mg/l) [2]	
Copper (T)	0.77	0.42	0.0021
Lead (T)	0.79	0.39	0.0027
Zinc (T)	1.14	0.43	0.0033

[1] kg/1,000 kkg (pounds per million pounds) of metal poured.
[2] These concentrations must be multiplied by the ratio of (1.45/x) where x is the actual normalized process wastewater flow (in gallons per 1,000 pounds of metal poured) for a specific plant.

(c) *Die Casting Operations.*

BAT EFFLUENT LIMITATIONS

Pollutant or pollutant property	Maximum for any 1 day	Maximum for monthly average
	kg/1,000 kkg (pounds per million pounds) of metal poured	
Copper (T)	0.0066	0.0036
Lead (T)	0.0068	0.0034
Zinc (T)	0.0098	0.0037
Total Phenols	0.0074	0.0026

	Maximum for any 1 day	Maximum for monthly average	Annual average [1]
	(mg/l) [2]	(mg/l) [2]	
Copper (T)	0.77	0.42	0.0015
Lead (T)	0.79	0.39	0.0019
Zinc (T)	1.14	0.43	0.0023
Total Phenols	0.86	0.3	0.0017

[1] kg/1,000 kkg (pounds per million pounds) of metal poured.
[2] These concentrations must be multiplied by the ratio of (1.04/x) where x is the actual normalized process wastewater flow (in gallons per 1,000 pounds of metal poured) for a specific plant.

(d) *Dust Collection Scrubber Operations.*

BAT EFFLUENT LIMITATIONS

Pollutant or pollutant property	Maximum for any 1 day	Maximum for monthly average
	kg/62.3 million Sm^3 (pounds per billion SCF) of air scrubbed	
Copper (T)	0.231	0.126
Lead (T)	0.237	0.117
Zinc (T)	0.343	0.129
Total Phenols	0.258	0.09

	Maximum for any 1 day	Maximum for monthly average	Annual average [1]
	(mg/l) [2]	(mg/l) [2]	
Copper (T)	0.77	0.42	0.0511
Lead (T)	0.79	0.39	0.0661
Zinc (T)	1.14	0.43	0.0811
Total Phenols	0.86	0.3	0.0601

[1] kg/62.3 million Sm^3 (lb per billion SCF) of air scrubbed.
[2] These concentrations must be multiplied by the ratio of (0.036/x) where x is the actual normalized process wastewater flow (in gallons per 1,000 SCF of air scrubbed) for a specific plant.

(e) *Grinding Scrubber Operations.* No discharge of process wastewater pollutants to navigable waters.

(f) *Investment Casting.*

BAT EFFLUENT LIMITATIONS

Pollutant or pollutant property	Maximum for any 1 day	Maximum for monthly average
	kg/1,000 kkg (pounds per million pounds) of metal poured	
Copper (T)	8.48	4.63
Lead (T)	8.7	4.3
Zinc (T)	12.6	4.74

	Maximum for any 1 day	Maximum for monthly average	Annual average [1]
	(mg/l) [2]	(mg/l) [2]	
Copper (T)	0.77	0.42	1.87
Lead (T)	0.79	0.39	2.42
Zinc (T)	1.14	0.43	2.97

[1] kg/1,000 kkg (pounds per million pounds) of metal poured.
[2] These concentrations must be multiplied by the ratio of (1,320/x) where x is the actual normalized process wastewater flow (in gallons per 1,000 pounds of metal poured) for a specific plant.

(g) *Melting Furnace Scrubber Operations.*

BAT EFFLUENT LIMITATIONS

Pollutant or pollutant property	Maximum for any 1 day	Maximum for monthly average
	kg/62.3 million Sm^3 (pounds per billion SCF) of air scrubbed	
Copper (T)	3.01	1.64
Lead (T)	3.09	1.52
Zinc (T)	4.45	1.68
Total phenols	3.36	1.17

	Maximum for any 1 day	Maximum for monthly average	Annual average [1]
	(mg/l) [2]	(mg/l) [2]	
Copper (T)	0.77	0.42	0.664
Lead (T)	0.79	0.39	0.859
Zinc (T)	1.14	0.43	1.05
Total phenols	0.86	0.3	0.781

[1] kg/62.3 million Sm^3 (pounds per billion SCF) of air scrubbed
[2] These concentrations must be multiplied by the ratio of (0.468/x) where x is the actual normalized process wastewater flow (in gallons per 1,000 SCF of air scrubbed) for a specific plant.

(h) *Mold Cooling Operations.*

BAT EFFLUENT LIMITATIONS

Pollutant or pollutant property	Maximum for any 1 day	Maximum for monthly average
	kg/1,000 kkg (pounds per million pounds) of metal poured	
Copper (T)	0.297	0.162
Lead (T)	0.305	0.151
Zinc (T)	0.44	0.166

	Maximum for any 1 day	Maximum for monthly average	Annual average [1]
	(mg/l) [2]	(mg/l) [2]	
Copper (T)	0.77	0.42	0.0656
Lead (T)	0.79	0.39	0.0849
Zinc (T)	1.14	0.43	0.104

[1] kg/1,000 kkg (pounds per million pounds) of metal poured.
[2] These concentrations must be multiplied by the ratio of (46.3/x) where x is the actual normalized process wastewater flow (in gallons per 1,000 pounds of metal poured) for a specific plant.

[50 FR 45247, Oct. 30, 1985; 51 FR 21760, June 16, 1986]

§ 464.14 New source performance standards.

Any new source subject to this subpart must achieve the following new source performance standards (NSPS), except that non-continuous dischargers shall not be subject to the maximum day and maximum for monthly average mass (kg/1,000 kkg or lb/million lb of metal poured; kg/62.3 million Sm^3 or lb/billion SCF of air scrubbed) effluent standards for copper, lead, zinc, total phenols, oil and grease, and TSS. For non-continuous dischargers, annual average mass standards and maximum day and maximum for monthly average concentration (mg/l) standards shall apply. Concentration standards and annual average mass standards shall only apply to non-continuous dischargers.

(a) *Casting Cleaning Operations.*

NSPS

Pollutant or pollutant property	Maximum for any 1 day	Maximum for monthly average
	kg/1,000 kkg (pounds per million pounds) of metal poured	
Copper (T)	0.0771	0.0421
Lead (T)	0.0791	0.039
Zinc (T)	0.114	0.0431
Oil and grease	3.0	1.0
TSS	3.8	1.5
pH	(1)	(1)

[1] Within the range of 7.0 to 10.0 at all times.

	Maximum for any 1 day	Maximum for monthly average	Annual average [1]
	(mg/l) [2]	(mg/l) [2]	
Copper (T)	0.77	0.42	0.017
Lead (T)	0.79	0.39	0.022
Zinc (T)	1.14	0.43	0.027
Oil and grease	30	10	0.501
TSS	38	15	1.0
pH	(3)	(3)	(3)

[1] kg/1,000 kkg (pounds per million pounds) of metal poured.
[2] These concentrations must be multiplied by the ratio of (12/x) where x is the actual normalized process wastewater flow (in gallons per 1,000 pounds of metal poured) for a specific plant.
[3] Within the range of 7.0 to 10.0 at all times.

(b) *Casting Quench Operations.*

NSPS

Pollutant or pollutant property	Maximum for any 1 day	Maximum for monthly average
	kg/1,000 kkg (pounds per million pounds) of metal poured	
Copper (T)	0.0093	0.0051
Lead (T)	0.0096	0.0047
Zinc (T)	0.0138	0.0052
Oil and grease	0.363	0.121
TSS	0.46	0.182
pH	(1)	(1)

[1] Within the range of 7.0 to 10.0 at all times.

	Maximum for any 1 day	Maximum for monthly average	Annual average [1]
	(mg/l) [2]	(mg/l) [2]	
Copper (T)	0.77	0.42	0.0021
Lead (T)	0.79	0.39	0.0027
Zinc (T)	1.14	0.43	0.0033
Oil and grease	30	10	0.0605
TSS	38	15	0.121
pH	(3)	(3)	(3)

[1] kg/1,000 kkg (pounds per million pounds) of metal poured.
[2] These concentrations must be multiplied by the ratio of (1.45/x) where x is the actual normalized process wastewater flow (in gallons per 1,000 pounds of metal poured) for a specific plant.
[3] Within the range of 7.0 to 10.0 at all times.

(c) *Die Casting Operations.*

NSPS

Pollutant or pollutant property	Maximum for one 1 day	Maximum for monthly average
	kg/1,000 kkg (pounds per million pounds) of metal poured	
Copper (T)	0.0066	0.0036
Lead (T)	0.0068	0.0034
Zinc (T)	0.0098	0.0037
Total Phenols	0.0074	0.0026
Oil and grease	0.259	0.0864
TSS and	0.33	0.13
pH	(1)	(1)

[1] Within the range of 7.0 to 10.0 at all times.

	Maximum for any 1 day	Maximum for monthly average	Annual average [1]
	(mg/l) [2]	(mg/l) [2]	
Copper (T)	0.77	0.42	0.0015
Lead (T)	0.79	0.39	0.0019
Zinc (T)	1.14	0.43	0.0023
Total phenols	0.86	0.3	0.0017
Oil and grease	30	10	0.0432
TSS and	38	15	0.0864
pH	(3)	(3)	(3)

[1] kg/1,000 kkg (pounds per million pounds) of metal poured.
[2] These concentrations must be multiplied by the ratio of (1.04/x) where x is the actual normalized process wastewater flow (in gallons per 1,000 pounds of metal poured)
[3] Within the range of 7.0 to 10.0 at all times.

(d) *Dust Collection Scrubber Operations.*

NSPS

Pollutant of pollutant property	Maximum for any 1 day	Maximum for monthly average
	kg/62.3 million Sm^3 (pounds per billion SCF) of air scrubbed	
Cooper (T)	0.231	0.126
Lead (T)	0.237	0.117
Zinc (T)	0.343	0.129
Total phenols	0.258	0.09
Oil and grease	9.01	3.0
TSS	11.4	4.51
pH	(1)	(1)

[1] Within the range of 7.0 to 10.0 at all times.

	Maximum for any 1 day	maximum for monthly average	Annual average [1]
	(mg/l) [2]	(mg/l) [2]	
Cooper (T)	0.77	0.42	0.0511
Lead (T)	0.79	0.39	0.0661
Zinc (T)	1.14	0.43	0.0811
Total phenols	0.86	0.3	0.0601
Oil and grease	30	10	1.5
TSS	38	15	3.0
pH	(3)	(3)	(3)

[1] kg/62.3 million Sm^3 (pounds per billion SCF) of air scrubbed.
[2] These concentrations must be multiplied by the ratio of (0.036/x) where x is the actual normalized process wastewater flow (in gallons per 1,000 SCF of air scrubbed) for a specific plant.
[3] Within the range of 7.0 to 10.0 at all times.

(e) *Grinding Scrubber Operations.* No discharge of process wastewater pollutants to navigable waters.

(f) *Investment Casting.*

NSPS

Pollutant or pollutant property	Maximum for any 1 day	Maximum for monthly average
	kg/1,000 kkg (pounds per million pounds) of metal poured	
Copper (T)	8.48	4.63
Lead (T)	8.7	4.3
Zinc (T)	12.6	4.74
Oil and grease	330	110
TSS	419	165
pH	(1)	(1)

1 Within the range of 7.0 to 10.0 at all times.

	Maximum for any 1 day	Maximum for monthly average	Annual average[1]
	(mg/l) [2]	(mg/l) [2]	
Copper (T)	0.77	0.42	1.87
Lead (T)	0.79	0.39	2.42
Zinc (T)	1.14	0.43	2.97
Oil and grease	30	10	55.1
TSS	38	15	110
pH	(3)	(3)	(3)

1 kg/1,000 kkg (pounds per million pounds) of metal poured

2 These concentrations must be multiplied by the ratio of (1,320/x) where x is the actual normalized process wastewater flow (in gallons per 1,000 pounds of metal poured) for a specific plant.

3 Within the range of 7.0 to 10.0 at all times.

(g) *Melting Furnace Scrubber Operations.*

NSPS

Pollutant or pollutant property	Maximum for any 1 day	Maximum for monthly average
	kg/62.3 million Sm 3 (pounds per billion SCF) of air scrubbed	
Copper (T)	3.01	1.64
Lead (T)	3.09	1.52
Zinc (T)	4.45	1.68
Total phenols	3.36	1.17
Oil and grease	117	39.1
TSS	148	58.6
pH	(1)	(1)

1 Within the range of 7.0 to 10.0 at all times.

	Maximum for any 1 day	Maximum for monthly average	Annual average[1]
	(mg/l) [2]	(mg/l) [2]	
Copper (T)	0.77	0.42	0.664
Lead (T)	0.79	0.39	0.859
Zinc (T)	1.14	0.43	1.05
Total phenols	0.86	0.3	0.781
Oil and grease	30	10	19.5
TSS	38	15	39.1
pH	(3)	(3)	(3)

1 kg/62.3 million Sm 3 (pounds per billion SCF) of air scrubbed.

2 These concentrations must be multiplied by the ratio of (0.468/x) where x is the actual normalized process wastewater flow (in gallons per 1,000 SCF of air scrubbed) for a specific plant.

3 Within the range of 7.0 to 10.0 at all times.

(h) *Mold Cooling Operations.*

NSPS

Pollutant or pollutant property	Maximum for any 1 day	Maximum for monthly average
	kg/1,000 kkg (pounds per million pounds) of metal poured	
Copper (T)	0.297	0.162
Lead (T)	0.305	0.151
Zinc (T)	0.44	0.166
Oil and grease	11.6	3.86
TSS	14.7	5.79
pH	(1)	(1)

1 Within the range of 7.0 to 10.0 at all times.

	Maximum for any 1 day	Maximum for monthly average	Annual average[1]
	(mg/l)[2]	(mg/l)[2]	
Copper (T)	0.77	0.42	0.0656
Lead (T)	0.79	0.39	0.0849
Zinc (T)	1.14	0.43	0.104
Oil and grease	30	10	1.93
TSS	38	15	3.86
pH	(3)	(3)	(3)

1 kg/1,000 kkg (pounds per million pounds of metal poured.

2 These concentrations must be multiplied by the ratio of (46.3/x) where x is the actual normalized process wastewater flow (in gallons per 1,000 pounds of metal poured) for a specific plant.

3 Within the range of 7.0 to 10.0 at all times.

[50 FR 45247, Oct. 30, 1985; 51 FR 21760, June 16, 1986]

§ 464.15 Pretreatment standards for existing sources.

Except as provided in 40 CFR 403.7 and 403.13, any existing source subject to this subpart which introduces pollutants into a publicly owned treatment works must comply with 40 CFR part 403 and achieve the following pretreatment standards for existing sources.

(a) *Casting Cleaning Operations.*

PSES

Pollutant or pollutant property	Maximum for any 1 day	Maximum for monthly average
	kg/1,000 kkg (pounds per million pounds) of metal poured	
Copper (T)	0.0771	0.0421
Lead (T)	0.0791	0.039
Zinc (T)	0.114	0.0431

(b) *Casting Quench Operation.*

PSES

Pollutant or pollutant property	Maximum for any 1 day	Maximum for monthly average
	kg/1,000 kkg (pounds per million pounds) of metal poured	
Copper (T)	0.0093	0.0051
Lead (T)	0.0096	0.0047
Zinc (T)	0.0138	0.0052
TT0	0.029	0.0095
Oil and grease (for alternate monitoring)	0.363	0.121

(c) *Die Casting Operations.*

PSES

Pollutant or pollutant property	Maximum for any 1 day	Maximum for monthly average
	kg/1,000 kkg (pounds per million pounds) of metal poured	
Copper (T)	0.0066	0.0036
Lead (T)	0.0068	0.0034
Zinc (T)	0.0098	0.0037
Total phenols	0.0074	0.0026
TTO	0.0308	0.01
Oil and grease (for alternate monitoring)	0.259	0.0864

(d) *Dust Collection Scrubber Operations.*

PSES

Pollutant or pollutant property	Maximum for any 1 day	Maximum for monthly average
	kg/62.3 million Sm^3 (pounds per billion SCF) of air scrubbed	
Copper (T)	0.231	0.126
Lead (T)	0.237	0.117
Zinc (T)	0.343	0.129
Total phenols	0.258	0.09
TTO	0.613	0.2
Oil and grease (for alternate monitoring)	9.01	3.00

(e) *Grinding Scrubber Operations.* No discharge of process wastewater pollutants to a POTW.

(f) *Investment Casting.*

PSES

Pollutant or pollutant property	Maximum for any 1 day	Maximum for monthly average
	kg/1,000 kkg (pounds per million pounds) of metal poured	
Copper (T)	8.48	4.63
Lead (T)	8.7	4.3
Zinc (T)	12.6	4.74
TTO	18.1	5.91
Oil and grease (for alternate monitoring	330	110

(g) *Melting Furnace Scrubber Operations.*

PSES

Pollutant or pollutant property	Maximum for any 1 day	Maximum for monthly average
	kg/62.3 million per billion Sm^3 (pounds SCF) of air scrubbed	
Copper (T)	3.01	1.64
Lead (T)	3.09	1.52
Zinc (T)	4.45	1.68
Total phenols	3.36	1.17
TTO	7.97	2.6
Oil and grease (for alternate monitoring)	117	39.1

(h) *Mold Cooling Operations.*

PSES

Pollutant or pollutant property	Maximum for any 1 day	Maximum for monthly average
	kg/1,000 kkg (pounds per million pounds) of metal poured	
Copper (T)	0.297	0.162
Lead (T)	0.305	0.151
Zinc (T)	0.44	0.166
TTO	0.935	0.304
Oil and grease (for alternate monitoring)	11.6	3.86

[50 FR 45247, Oct. 30, 1985; 51 FR 21760, June 16, 1986]

§ 464.16 Pretreatment standards for new sources.

Except as provided in 40 CFR 403.7, any new source subject to this subpart which introduces pollutants into publicly owned treatment works must

comply with 40 CFR part 403 and achieve the following pretreatment standards for new sources.

(a) *Casting Cleaning Operations.*

PSNS

Pollutant or pollutant property	Maximum for any 1 day	Maximum for monthly average
	kg/1,000 kkg (pounds per million pounds) of metal poured	
Copper (T)	0.0771	0.0421
Lead (T)	0.0791	0.039
Zinc (T)	0.114	0.0431

(b) *Casting Quench Operations.*

PSNS

Pollutant or pollutant property	Maximum for any 1 day	Maximum for monthly average
	kg/1,000 kkg (pounds per million pounds) of metal poured	
Copper (T)	0.0093	0.0051
Lead (T)	0.0096	0.0047
Zinc (T)	0.0138	0.0052
TTO	0.029	0.0095
Oil and grease (for alternate monitoring)	0.363	0.121

(c) *Die Casting Operations.*

PSNS

Pollutant or pollutant property	Maximum for any 1 day	Maximum for monthly average
	kg/1,000 kkg (pounds per million pounds) of metal poured	
Copper (T)	0.0066	0.0036
Lead (T)	0.0068	0.0034
Zinc (T)	0.0098	0.0037
Total Phenols	0.0074	0.0026
TTO	0.0308	0.01
Oil and grease (for alternate monitoring)	0.259	0.0864

(d) *Dust Collection Scrubber Operations.*

PSNS

Pollutant or pollutant property	Maximum for any 1 day	Maximum for monthly average
	kg/62.3 million Sm^3 (pounds per billion SCF) of air scrubbed	
Copper (T)	0.231	0.126
Lead (T)	0.237	0.117
Zinc (T)	0.343	0.129
Total Phenols	0.258	0.09
TTO	0.613	0.2
Oil and grease (for alternate monitoring)	9.01	3.0

(e) *Grinding Scrubber Operations.* No discharge of process wastewater pollutants to a POTW.

(f) *Investment Casting.*

PSNS

Pollutant or pollutant property	Maximum for any 1 day	Maximum for monthly average
	kg/1,000 kkg (pounds per million pounds) of metal poured	
Copper (T)	8.48	4.63
Lead (T)	8.7	4.3
Zinc (T)	12.6	4.74
TTO	18.1	5.91
Oil and grease (for alternate monitoring)	330	110

(g) *Melting Furnace Scrubber Operations.*

PSNS

Pollutant or pollutant property	Maximum for any 1 day	Maximum for monthly average
	kg/62.3 million Sm^3 (pounds per billion SCF) of air scrubbed	
Copper (T)	3.01	1.64
Lead (T)	3.09	1.52
Zinc (T)	4.45	1.68
Total Phenols	3.36	1.17
TTO	7.97	2.6
Oil and grease (for alternate monitoring)	117	39.1

(h) *Mold Cooling Operations.*

PSNS

Pollutant or pollutant property	Maximum for any 1 day	Maximum for monthly average
	kg/1,000 kkg (pounds per million pounds) of metal poured	
Copper (T)	0.297	0.162
Lead (T)	0.305	0.151
Zinc (T)	0.44	0.166
TTO	0.935	0.304
Oil and grease (for alternate monitoring)	11.6	3.86

§ 464.17 Effluent limitations guidelines representing the degree of effluent reduction attainable by the application of the best conventional pollutant control technology. [Reserved]

Subpart B—Copper Casting Subcategory

§ 464.20 Applicability; description of the copper casting subcategory.

The provisions of this subpart are applicable to discharges to waters of the United States and to the introduction of pollutants into publicly owned treatment works resulting from copper casting operations as defined in § 464.02(b).

§ 464.21 Specialized definitions.

For the purpose of this subpart:

(a) *Total Toxic Organics* (*TTO*). TTO is a regulated parameter under PSES (§ 464.25) and PSNS (§ 464.26) for the copper subcategory and is comprised of a discrete list of toxic organic pollutants for each process segment where it is regulated, as follows:

(1) Casting Quench (§ 464.25(a) and § 464.26(a)):

23. chloroform (trichloromethane)
64. pentachlorophenol
66. bis(2-ethylhexyl)phthalate
71. dimethyl phthalate

(2) Dust Collection Scrubbers (§ 464.25(c) and 464.26(c)):

1. acenaphthene
22. para-chloro meta-cresol
23. chloroform (trichloromethane)
34. 2,4-dimethylphenol
55. naphthalene
58. 4-nitrophenol
64. pentachlorophenol
65. phenol
66. bis(2-ethylhexyl)phthalate
67. butyl benzyl phthalate
68. di-n-butyl phthalate
70. diethyl phthalate
71. dimethyl phthalate
72. benzo(a)anthracene (1,2-benzanthracene)
74. 3,4-benzofluoranthene
75. benzo(k) fluoranthene
76. chrysene
77. acenaphthylene
78. anthracene
81. phenanthrene
84. pyrene

(3) Investment Casting (§ 464.25(e) and § 464.26(e)):

1. acenaphthene
22. para-chloro meta-cresol
23. chloroform (trichloromethane)
34. 2,4-dimethylphenol
55. naphthalene
58. 4-nitrophenol
64. pentachlorophenol
65. phenol
66. bis (2-ethylhexyl)phthalate
67. butyl benzyl phthalate
68. di-n-butyl phthalate
70. diethyl phthalate
71. dimethyl phthalate
72. benzo(a)anthracene (1,2-benzanthracene)
74. 3,4-benzofluoranthene
75. benzo(k) fluoranthene
76. chrysene
77. acenaphthylene
78. anthracene
81. Phenanthrene
84. pyrene

(4) Melting Furnace Scrubber (§ 464.25(f) and § 464.26(f)):

1. acenaphthene
22. para-chloro meta-cresol
23. chloroform (trichloromethane)
34. 2,4-dimethylphenol
55. naphthalene
58. 4-nitrophenol
64. pentachlorophenol
65. phenol
66. bis (2-ethylhexyl) phthalate
67. butyl benzyl phthalate
68. di-n-butyl phthalate
70. diethyl phthalate
71. dimethyl phthalate
72. benzo(a)anthracene (1,2-benzanthracene)
74. 3,4-benzoflouranthene
75. benzo(k) flouranthene
76. chrysene
77. acenaphthylene
78. anthracene
81. phenanthrene
84. pyrene

(5) Mold Cooling (§ 464.25(g) and § 464.26(g)):

23. chloroform (trichloromethane)
64. pentachlorophenol
66. bis(2-ethylhexyl)phthalate
71. dimethyl phthalate

§ 464.22 Effluent limitations guidelines representing the degree of effluent reduction attainable by the application of the best practicable control technology currently available.

Except as provided in 40 CFR 125.30 through 125.32, any existing point source subject to this subpart must achieve the following effluent limitations representing the degree of effluent reduction attainable by the application of the best practicable control technology currently available, except that non-continuous dischargers shall not be subject to the maximum day and maximum for monthly average mass (kg/1,000 kkg or lb/million lb of metal poured; kg/62.3 million Sm^3 or lb/billion SCF of air scrubbed) effluent limitations for copper, lead, zinc, total phenols, oil and grease, and TSS. For non-continuous dischargers, annual average mass limitations and maximum day and maximum for monthly average concentration (mg/l) limitations shall apply. Concentration limitations and annual average mass limitations shall only apply to non-continuous dischargers.

(a) *Casting Quench Operations.*

BPT EFFLUENT LIMITATIONS

Pollutant or pollutant property	Maximum for any 1 day	Maximum for monthly average
	kg/1,000 kkg (pounds per million pounds) of metal poured	
Copper (T)	0.0307	0.0168
Lead (T)	0.0315	0.0156
Zinc (T)	0.0455	0.0171
Oil and grease	1.2	0.399
TSS	1.52	0.598
pH	(1)	(1)

[1] Within the range of 7.0 to 10.0 at all times.

	Maximum for any 1 day	Maximum for monthly average	Annual average [1]
	(mg/l) [2]	(mg/l) [2]	
Copper (T)	0.77	0.42	0.0068
Lead (T)	0.79	0.39	0.0088
Zinc (T)	1.14	0.43	0.0108
Oil and grease	30	10	0.199
TSS	38	15	0.399
pH	(3)	(3)	(3)

[1] kg/1000 kkg (pounds per million pounds) of metal poured
[2] These concentrations must be multiplied by the ratio of (4.8/x) where x is the actual normalized process wastewater flow (in gallons per 1,000 pounds of metal poured) for a specific plant.
[3] Within the range of 7.0 to 10.0 at all times.

(b) *Direct Chill Casting Operations.*

BPT EFFLUENT LIMITATIONS

Pollutant or pollutant property	Maximum for any 1 day	Maximum for monthly average
	kg/1,000 kkg (pounds per million pounds) of metal poured	
Copper (T)	0.928	0.506
Lead (T)	0.952	0.47
Zinc (T)	1.37	0.518
Oil and grease	36.2	12.1
TSS	45.8	18.1
pH	(1)	(1)

[1] Within the range of 7.0 to 10.0 at all times.

	Maximum for any 1 day	Maximum for monthly average	Annual average [1]
	(mg/l) [2]	(mg/l) [2]	
Copper (T)	0.77	0.42	0.205
Lead (T)	0.79	0.39	0.265
Zinc (T)	1.14	0.43	0.326
Oil and grease	30	10	6.03
TSS	38	15	12.1
pH	(3)	(3)	(3)

[1] kg/1000 kkg (pounds per million pounds) of metal poured.
[2] These concentrations must be multiplied by the ratio of (145/x) where x is the actual normalized process wastewater flow (in gallons per 1,000 pounds of metal poured) for a specific plant.
[3] Within the range of 7.0 to 10.0 at all times.

(c) *Dust Collection Scrubber Operations.*

BPT EFFLUENT LIMITATIONS

Pollutant or pollutant property	Maximum for any 1 day	Maximum for monthly average
	kg/62.3 million Sm^3 (pounds per billion SCF) of air scrubbed	
Copper (T)	0.553	0.301
Lead (T)	0.567	0.28
Zinc (T)	0.818	0.309
Total phenols	0.617	0.215
Oil and grease	21.5	7.18
TSS	27.3	10.8
ph	(1)	(1)

[1] Within the range of 7.0 to 10.0 at all times.

	Maximum for any 1 day	Maximum for monthly average	Annual average [1]
	(mg/l) [2]	(mg/l) [2]	
Copper (T)	0.77	0.42	0.122
Lead (T)	0.79	0.39	0.158
Zinc (T)	1.14	0.43	0.194
Total phenols	0.86	0.3	0.144
Oil and grease	30	10	3.59
TSS	38	15	7.18
pH	(3)	(3)	(3)

[1] kg/62.3 million Sm^3 (pounds per billion SCF) of air scrubbed.
[2] These concentrations must be multiplied by the ratio of (0.086/x) where x is the actual normalized process wastewater flow (in gallons per 1,000 SCF of air scrubbed) for a specific plant.

[3] Within the range of 7.0 to 10.0 at all times.

(d) *Grinding Scrubber Operations.* No discharge of process wastewater pollutants to navigable waters.

(e) *Investment Casting.*

BPT EFFLUENT LIMITATIONS

Pollutant or pollutant property	Maximum for any 1 day	Maximum for monthly average
	kg/1,000 kkg (pounds per million pounds) of metal poured	
Copper (T)	8.48	4.63
Lead (T)	8.7	4.3
Zinc (T)	12.6	4.74
Oil and grease	330	110
TSS	419	165
pH	(1)	(1)

[1] Within the range of 7.0 to 10.0 at all times.

	Maximum for any 1 day	Maximum for monthly average	Annual average [1]
	(mg/l) [2]	(mg/l) [2]	
Copper (T)	0.77	0.42	1.87
Lead (T)	0.79	0.39	2.42
Zinc (T)	1.14	0.43	2.97
Oil and grease	30	10	55.1
TSS	38	15	110
pH	(3)	(3)	(3)

[1] kg/1,000 kkg (pounds per million pounds) of metal poured.
[2] These concentrations must be multiplied by the ratio of (1,320/x) where x is the actual normalized process wastewater flow (in gallons per 1,000 pounds of metal poured) for a specific plant.
[3] Within the range of 7.0 to 10.0 at all times.

(f) *Melting Furnace Scrubber Operations.*

BPT EFFLUENT LIMITATIONS

Pollutant or pollutant property	Maximum for any 1 day	Maximum for monthly average
	kg/62.3 million Sm^3 (pounds per billion SCF) of air scrubbed	
Copper (T)	1.81	0.988
Lead (T)	1.86	0.918
Zinc (T)	2.68	1.01
Total phenols	2.02	0.706
Oil and grease	70.6	23.5
TSS	89.4	35.3
pH	(1)	(1)

[1] Within the range of 7.0 to 10.0 at all times.

	Maximum for any 1 day	Maximum for monthly average	Annual average [1]
	(mg/l) [2]	(mg/l) [2]	
Copper (T)	0.77	0.42	0.4
Lead (T)	0.79	0.39	0.518
Zinc (T)	1.14	0.43	0.635
Total phenols	0.86	0.3	0.467
Oil and grease	30	10	11.8
TSS	38	15	23.5
pH	(3)	(3)	(3)

[1] kg/62.3 million Sm^3 (pound per billion SCF) of air scrubbed.
[2] These concentrations must be multiplied by the ratio of (0.282/x) where x is the actual normalized process wastewater flow (in gallons per 1,000 SCF of air scrubbed) for a specific plant.
[3] Within the range of 7.0 to 10.0 at all times.

(g) *Mold Cooling Operations.*

BPT EFFLUENT LIMITATIONS

Pollutant or pollutant property	Maximum for any 1 day	Maximum for monthly average
	kg/1,000 kkg (pounds per million pounds) of metal poured	
Copper (T)	0.392	0.214
Lead (T)	0.402	0.199
Zinc (T)	0.58	0.219
Oil and grease	15.3	5.09
TSS	19.3	7.63
pH	(1)	(1)

[1] Within the range of 7.0 to 10.0 at all times.

	Maximum for any 1 day	Maximum for monthly average	Annual average [1]
	(mg/l) [2]	(mg/l) [2]	
Copper (T)	0.77	0.42	0.0865
Lead (T)	0.79	0.39	0.112
Zinc (T)	1.14	0.43	0.137
Oil and grease	30	10	2.54
TSS	38	15	5.09
pH	(3)	(3)	(3)

[1] kg/1,000 kkg (pounds per million pounds) of metal poured.
[2] These concentrations must be multiplied by the ratio of (61/x) where x is the actual normalized process wastewater flow (in gallons per 1,000 pounds of metal poured) for a specific plant.
[3] Within the range of 7.0 to 10.0 at all times.

[50 FR 45247, Oct. 30, 1985; 51 FR 21760, June 16, 1986]

§ 464.23 Effluent limitations guidelines representing the degree of effluent reduction attainable by the application of the best available technology economically achievable.

Except as provided in 40 CFR 125.30 through 125.32, any existing point source subject to this subpart must achieve the following effluent limitations representing the degree of effluent reduction attainable by the application of the best available technology

economically achievable, except that non-continuous dischargers shall not be subject to the maximum day and maximum for monthly average mass (kg/1,000 kkg or lb/million lb of metal poured; kg/62.3 million Sm^3 or lb/billion SCF of air scrubbed) effluent limitations for copper, lead, zinc, and total phenols. For non-continuous discharges, annual average mass limitations and maximum day and maximum for monthly average concentration (mg/l) limitations shall apply. Concentration limitations and annual average mass limitations shall only apply to non-continuous dischargers.

(a) *Casting Quench Operations.*

BAT EFFLUENT LIMITATIONS

Pollutant or pollutant property	Maximum for any 1 day	Maximum for monthly average
	kg/1,000 kkg (pounds per million pounds) of metal poured	
Copper (T)	0.0307	.0168
Lead (T)	0.0211	.0104
Zinc (T)	0.0303	.0116

	Maximum for any 1 day	Maximum for monthly average	Annual average[1]
	(mg/l)[2]	(mg/l)[2]	
Copper (T)	0.77	0.42	0.0068
Lead (T)	0.53	0.26	0.006
Zinc (T)	0.76	0.29	0.0072

[1] kg/1,000 kkg (pounds per million pounds) of metal poured.
[2] These concentrations must be multiplied by the ratio of (4.8/x) where x is the actual normalized process waste-water flow (in gallons per 1,000 pounds of metal poured) for a specific plant.

(b) *Direct Chill Casting Operations.*

BAT EFFLUENT LIMITATIONS

Pollutant or pollutant property	Maximum for any 1 day	Maximum for monthly average
	kg/1,000 kkg (pounds per million pounds) of metal poured	
Copper (T)	0.928	0.506
Lead (T)	0.639	0.314
Zinc (T)	0.916	0.35

	Maximum for any 1 day	Maximum for monthly average	Annual average[1]
	(mg/l)[2]	(mg/l)[2]	
Copper (T)	0.77	0.42	0.205
Lead (T)	0.53	0.26	0.181
Zinc (T)	0.76	0.29	0.217

[1] kg/1,000 kkg (pounds per million pounds) of metal poured.
[2] These concentrations must be multiplied by the ratio of (145/x) where x is the actual normalized process waste-water flow (in gallons per 1,000 pounds of metal poured) for a specific plant.

(c) *Dust Collection Scrubber Operations.*

BAT EFFLUENT LIMITATIONS

Pollutant or pollutant property	Maximum for any 1 day	Maximum for monthly average
	kg/62.3 million Sm^3 (pounds per billion SCF) of air scrubbed	
Copper (T)	0.553	0.301
Lead (T)	0.38	0.187
Zinc (T)	0.545	0.208
Total phenols	0.617	0.215

	Maximum for any 1 day	Maximum for monthly average	Annual average[1]
	(mg/l)[2]	(mg/l)[2]	
Copper (T)	0.77	0.42	0.122
Lead (T)	0.53	0.26	0.108
Zinc (T)	0.76	0.29	0.129
Total phenols	0.86	0.3	0.144

[1] kg/62.3 million Sm^3 (pounds per billion SCF) of air scrubbed.
[2] These concentrations must be multiplied by the ratio of (0.086/x) where x is the actual normalized process waste-water flow (in gallons per 1,000 SCF of air scrubbed) for a specific plant.

(d) *Grinding Scrubber Operations.* No discharge of process wastewater pollutants to navigable waters.

(e) *Investment Casting.*

BAT EFFLUENT LIMITATIONS

Pollutant or pollutant property	Maximum for any 1 day	Maximum for monthly average
	kg/1000 kkg (pounds per million pounds) of metal poured	
Copper (T)	8.48	4.63
Lead (T)	5.84	2.86
Zinc (T)	8.37	3.19

	Maximum for any 1 day	Maximum for monthly average	Annual average[1]
	(mg/l)[2]	(mg/l)[2]	
Copper (T)	0.77	0.42	1.87
Lead (T)	0.53	0.26	1.65
Zinc (T)	0.76	0.29	1.98

[1] kg/1000 kkg (pounds per million pounds) of metal poured.

[2] These concentrations must be multiplied by the ratio of (1,320/x) where x is the actual normalized process wastewater flow (in gallons per 1,000 pounds of metal poured) for a specific plant.

(f) *Melting Furnace Scrubber Operations.*

BAT EFFLUENT LIMITATIONS

Pollutant or pollutant property	Maximum for any 1 day	Maximum for monthly average
	kg/62.3 million Sm^3 (pounds per billion SCF) of air scrubbed	
Copper (T)	1.81	0.988
Lead (T)	1.25	0.612
Zinc (T)	1.79	0.673
Total phenols	2.02	0.706

	Maximum for any 1 day	Maximum for monthly average	Annual average [1]
	(mg/l) [2]	(mg/l) [2]	
Copper (T)	0.77	0.42	0.4
Lead (T)	0.53	0.26	0.353
Zinc (T)	0.76	0.29	0.424
Total phenols	0.86	0.3	0.471

[1] kg/62.3 million Sm^3 (pounds per billion SCF) of air scrubbed.

[2] These concentrations must be multiplied by the ratio of (0.282/x) where x is the actual normalized process wastewater flow (in gallons per 1,000 SCF of air scrubbed) for a specific plant.

(g) *Mold Cooling Operations.*

BAT EFFLUENT LIMITATIONS

Pollutant or pollutant property	Maximum for any 1 day	Maximum for monthly average
	kg/1,000 kkg (pounds per million pounds) of metal poured	
Copper (T)	0.392	0.214
Lead (T)	0.27	0.132
Zinc (T)	0.387	0.148

	Maximum for any 1 day	Maximum for monthly average	Annual average [1]
	(mg/l) [2]	(mg/l) [2]	
Copper (T)	0.77	0.42	0.0865
Lead (T)	0.53	0.26	0.0763
Zinc (T)	0.76	0.29	0.0916

[1] kg/1,000 kkg (pounds per million pounds) of metal poured.

[2] These concentrations must be multiplied by the ratio of (61/x) where x is the actual normalized process wastewater flow (in gallons per 1,000 pounds of metal poured) for a specific plant.

[50 FR 45247, Oct. 30, 1985; 51 FR 21761, June 16, 1986]

§ 464.24 New source performance standards.

Any new source subject to this subpart must achieve the following new source performance standards (NSPS), except that non-continuous dischargers shall not be subject to the maximum day and maximum for monthly average mass (kg/1,000 kkg or lb/million lb of metal poured; kg/62.3 million Sm^3 or lb/billion SCF of air scrubbed) effluent standards for copper, lead, zinc, total phenols, oil and grease, and TSS. For non-continuous dischargers, annual average mass standards and maximum day and maximum for monthly average concentration (mg/l) standards shall apply. Concentration standards and annual average mass standards shall only apply to non-continuous dischargers.

(a) *Casting Quench Operations.*

NSPS

Pollutant or pollutant property	Maximum for any 1 day	Maximum for monthly average
	kg/1,000 kkg (pounds per million pounds) of metal poured	
Copper (T)	0.0307	0.0168
Lead (T)	0.0211	0.0104
Zinc (T)	0.0303	0.0116
Oil and grease	1.2	0.399
TSS	0.598	0.479
pH	([1])	([1])

[1] Within the range of 7.0 to 10.0 at all times.

	Maximum for any 1 day	Maximum for monthly average	Annual average [1]
	(mg/l) [2]	(mg/l) [2]	
Copper (T)	0.77	0.42	0.0068
Lead (T)	0.53	0.26	0.006
Zinc (T)	0.76	0.29	0.0072
Oil and grease	30	10	0.199
TSS	15	12	0.104
pH	([3])	([3])	([3])

[1] kg/1,000 kkg (pounds per million pounds) of metal poured.

[2] These concentrations must be multiplied by the ratio of (4.8/x) where x is the actual normalized process wastewater flow (in gallons per 1,000 pounds of metal poured) for a specific plant.

[3] Within the range of 7.0 to 10.0 at all times.

(b) *Direct Chill Casting Operations.*

NSPS

Pollutant or pollutant property	Maximum for any 1 day	Maximum for monthly average
	kg/1,000 kkg (pounds per million pounds) of metal poured	
Copper (T)	0.928	0.506
Lead (T)	0.639	0.314
Zinc (T)	0.916	0.35
Oil and grease	36.2	12.1
TSS	18.1	14.5
pH	(1)	(1)

[1] Within the range of 7.0 to 10.0 at all times.

	Maximum for any 1 day	Maximum for monthly average	Annual average [1]
	(mg/l) [2]	(mg/l) [2]	
Copper (T)	0.77	0.42	0.205
Lead (T)	0.53	0.26	0.181
Zinc (T)	0.76	0.29	0.217
Oil and grease	30	10	6.03
TSS	15	12	3.13
pH	(3)	(3)	(3)

[1] kg/1,000 kkg (pounds per million pounds) of metal poured.
[2] These concentrations must be multiplied by the ratio of (145/x) where x is the actual normalized process wastewater flow (in gallons per 1,000 pounds of metal poured) for a specific plant.
[3] Within the range of 7.0 to 10.0 at all times.

(c) *Dust Collection Scrubber Operations.*

NSPS

Pollutant or pollutant property	Maximum for any 1 day	Maximum for monthly average
	kg/62.3 million Sm^3 (pounds per billion SCF) of air scrubbed	
Copper (T)	0.553	0.301
Lead (T)	0.38	0.187
Zinc (T)	0.545	0.208
Total phenols	0.617	0.215
Oil and grease	21.5	7.18
TSS	10.8	8.61
pH	(1)	(1)

[1] Within the range of 7.0 to 10.0 at all times.

	Maximum for any 1 day	Maximum for monthly average	Annual average [1]
	(mg/l) [2]	(mg/l) [2]	
Copper (T)	0.77	0.42	0.122
Lead (T)	0.53	0.26	0.108
Zinc (T)	0.76	0.29	0.129
Total phenols	0.86	0.3	0.144
Oil and grease	30	10	3.59
TSS	15	12	1.87
pH	(3)	(3)	(3)

[1] kg/62.3 million Sm^3 (pounds per billion SCF) of air scrubbed.
[2] These concentrations must be multiplied by the ratio of (0.086/x) where x is the actual normalized process wastewater flow (in gallons per 1,000 SCF of air scrubbed) for a specific plant.
[3] Within the range of 7.0 to 10.0 at all times.

(d) *Grinding Scrubber Operations.* No discharge of process wastewater pollutants to navigable waters.

(e) *Investment Casting.*

NSPS

Pollutant or pollutant property	Maximum for any 1 day	Maximum for monthly average
	kg/1,000 kkg (pounds per millions pounds) of metal poured	
Copper (T)	8.48	4.63
Lead (T)	5.84	2.86
Zinc (T)	8.37	3.19
Oil and grease	330	110
TSS	165	132
pH	(1)	(1)

[1] Within the range of 7.0 to 10.0 at all times.

	Maximum for any 1 day	Maximum for monthly average	Annual average [1]
	(mg/l) [2]	mg/l) [2]	
Copper (T)	0.77	0.42	1.87
Lead (T)	0.53	0.26	1.65
Zinc (T)	0.76	0.29	1.98
Oil and grease	30	10	55.1
TSS	15	12	28.6
pH	(3)	(3)	(3)

[1] kg/1,000 kkg (pounds per million pounds) of metal poured.
[2] These concentrations must be multiplied by the ratio of (1,320/x) where x is the actual normalized process wastewater flow (in gallons per 1,000 pounds of metal poured) for a specific plant.
[3] Within the range of 7.0 to 10.0 at all times.

(f) *Melting Furnace Scrubber Operations.*

NSPS

Pollutant or pollutant property	Maximum for any 1 day	Maximum for monthly average
	kg/62.3 million Sm^3 (pounds per billion SCF) of air scrubbed	
Copper (T)	1.81	0.988
Lead (T)	1.25	0.612
Zinc (T)	1.79	0.673
Total phenols	2.02	0.706
Oil and grease	70.6	23.5
TSS	35.3	28.2
pH	(1)	(1)

[1] Within the range of 7.0 to 10.0 at all times.

	Maximum for any 1 day	Maximum for monthly average	Annual average[1]
	(mg/l) [2]	(mg/l) [2]	
Copper (T)	0.77	0.42	0.4
Lead (T)	0.53	0.26	0.353
Zinc (T)	0.76	0.29	0.424
Total phenols	0.86	0.3	0.471
Oil and grease	30	10	11.8
TSS	15	12	6.12
pH	(3)	(3)	(3)

[1] kg/62.3 Sm^3 (pounds per billion SCF) of air scrubbed.

[2] These concentrations must be multiplied by the ratio of (0.282/x) where x is the actual normalized process waste-water flow (in gallons per 1,000 SCF of air scrubbed) for a specific plant.
[3] Within the range of 7.0 to 10.0 at all times.

(g) *Mold Cooling Operations.*

NSPS

Pollutant or pollutant property	Maximum for any 1 day	Maximum for monthly average
	kg/1,000 kkg (pounds per million pounds) of metal poured	
Copper (T)	0.392	0.214
Lead (T)	0.27	0.132
Zinc (T)	0.387	0.148
Oil and grease	15.3	5.09
TSS	7.63	6.11
pH	(1)	(1)

[1] Within the range of 7.0 to 10.0 at all times.

	Maximum for any 1 day	Maximum for monthly average	Annual average [1]
	(mg/1) [2]	(mg/1) [2]	
Copper (T)	0.77	0.42	0.0865
Lead (T)	0.53	0.26	0.0763
Zinc (T)	0.76	0.29	0.0916
Oil and grease	30	10	2.54
TSS	15	12	1.32
pH	(3)	(3)	(3)

[1] kg/1,000 kkg (pounds per million pound) of metal poured.
[2] These concentrations must be multiplied by the ratio of (61/x) where x is the actual normalized process waste-water flow (in gallons per 1,000 pounds of metal poured) for a specific plant.
[3] Within the range of 7.0 to 10.0 at all times.

[50 FR 45247, Oct. 30, 1985; 51 FR 21761, June 16, 1986]

§ 464.25 Pretreatment standards for existing sources.

Except as provided in 40 CFR 403.7 and 403.13, any existing source subject to this subpart which introduces pollutants into a publicly owned treatment works must comply with 40 CFR part 403 and achieve the following pretreatment standards for existing sources.

(a) *Casting Quench Operations.*

PSES

Pollutant or pollutant property	Maximum for any 1 day	Maximum for monthly average
	kg/1000 kkg (pounds per million pounds) of metal poured	
Copper (T)	0.0307	0.0168
Lead (T)	0.0211	0.0104
Zinc (T)	0.0303	0.0116
TTO	0.0335	0.0109
Oil and grease (for alternate monitoring)	1.2	0.399

(b) *Direct Chill Casting Operations.*

PSES

Pollutant or pollutant property	Maximum for any 1 day	Maximum for monthly average
	kg/1,000 kkg (pounds per million pounds) of metal poured	
Copper (T)	0.928	0.506
Lead (T)	0.639	0.314
Zinc (T)	0.916	0.35

(c) *Dust Collection Scrubber Operations.*

PSES

Pollutant or pollutant property	Maximum for any 1 day	Maximum for monthly average
	kg/62.3 million Sm^3 (pounds per billion SCF) of air scrubbed	
Copper (T)	0.552	0.301
Lead (T)	0.38	0.187
Zinc (T)	0.545	0.208
Total phenols	0.617	0.215
TTO	1.65	0.54
Oil and grease (for alternate monitoring)	21.5	7.18

(d) *Grinding Scrubber Operations.* No discharge of process wastewater pollutants to a POTW.

(e) *Investment Casting.*

PSES

Pollutant or pollutant property	Maximum for any 1 day	Maximum for monthly average
	kg/1,000 kkg (pounds per million pounds) of metal poured	
Copper (T)	8.48	4.63
Lead (T)	5.84	2.86
Zinc (T)	8.37	3.19
TTO	25.4	8.29
Oil and grease for alternate monitoring)	330	110

(f) *Melting Furnace Scrubber Operations.*

PSES

Pollutant or pollutant property	Maximum for any 1 day	Maximum for monthly average
	kg/62.3 million Sm^3 (pounds per billion SCF) of air scrubbed	
Copper (T)	1.81	0.988
Lead (T)	1.25	0.612
Zinc (T)	1.79	0.673
Total phenols	2.02	0.706
TTO	5.41	1.77
Oil and grease (for alternate monitoring)	70.6	23.5

(g) *Mold Cooling Operations.*

PSES

Pollutant or pollutant property	Maximum for any 1 day	Maximum for monthly average
	kg/1,000 kkg (pounds per million pounds) of metal poured	
Copper (T)	0.392	0.214
Lead (T)	0.27	0.132
Zinc (T)	0.387	0.148
TTO	0.428	0.14
Oil and grease (for alternate monitoring)	15.3	5.09

§ 464.26 Pretreatment standards for new sources.

Except as provided in 40 CFR 403.7, any new source subject to this subpart which introduces pollutants into publicly owned treatment works must comply with 40 CFR part 403 and achieve the following pretreatment standards for new sources.

(a) *Casting Quench Operations.*

PSNS

Pollutant or pollutant property	Maximum for any 1 day	Maximum for monthly average
	kg/1,000 kkg (pounds per million pounds) of metal poured	
Copper (T)	0.0307	0.0168
Lead (T)	0.0211	0.0104
Zinc (T)	0.0303	0.0116
TTO	0.0335	0.0109
Oil and grease (for alternate monitoring)	1.2	0.399

(b) *Direct Chill Casting Operations.*

PSNS

Pollutant or pollutant property	Maximum for any 1 day	Maximum for monthly average
	kg/1,000 kkg (pounds per million pounds) of metal poured	
Copper (T)	0.928	0.506
Lead (T)	0.639	0.314
Zinc (T)	0.916	0.35

(c) *Dust Collection Scrubber Operations.*

PSNS

Pollutant or pollutant property	Maximum for any 1 day	Maximum for monthly average
	kg/62.3 Million Sm^3 (pounds per billion SCF) of air scrubbed	
Copper (T)	0.552	0.301
Lead (T)	0.38	0.187
Zinc (T)	0.545	0.208
Total Phenols	0.617	0.215
TTO	1.65	0.54
Oil and Grease (for alternate monitoring	21.5	7.18

(d) *Grinding Scrubber Operations.* No discharge of process wastewater pollutants to a POTW.

(e) *Investment Casting.*

PSNS

Pollutant or pollutant property	Maximum for any 1 day	Maximum for monthly average
	kg/1,000 kkg (pounds per million pounds) of metal poured	
Copper (T)	8.48	4.63
Lead (T)	5.84	2.86
Zinc (T)	8.37	3.19
TTO	25.4	8.29
Oil and Grease (for alternate monitoring	330	110

(f) *Melting Furnace Scrubber Operations.*

PSNS

Pollutant or pollutant property	Maximum for any 1 day	Maximum for monthly average
	kg/62.3 million Sm^3 (pounds per billion SCF) of air scrubbed	
Copper (T)	1.81	0.988
Lead (T)	1.25	0.612
Zinc (T)	1.79	0.673
Total Phenols	2.02	0.706
TTO	5.41	1.77
Oil and Grease (for alternate monitoring	70.6	23.5

(g) *Mold Cooling Operations.*

PSNS

Pollutant or pollutant property	Maximum for any 1 day	Maximum for monthly average
	kg/1,000 kkg (pounds per million pounds) of metal poured	
Copper (T)	0.392	0.214
Lead (T)	0.27	0.132
Zinc (T)	0.387	0.148
TTO	0.428	0.14
Oil and Grease (for alternate monitoring	15.3	5.09

§ 464.27 Effluent limitations guidelines representing the degree of effluent reduction attainable by the application of the best conventional pollutant control technology. [Reserved]

Subpart C—Ferrous Casting Subcategory

§ 464.30 Applicability; description of the ferrous casting subcategory.

The provisions of this subpart are applicable to discharges to waters of the United States and to the introduction of pollutants into publicly owned treatment works resulting from ferrous casting operations as defined in § 464.02(c).

§ 464.31 Specialized definitions.

For the purpose of this subpart:

(a) *Total Toxic Organics (TTO).* TTO is a regulated parameter under PSES (§ 464.35) and PSNS (§ 464.36) for the ferrous subcategory and is comprised of a discrete list of toxic organic pollutants for each process segment where it is regulated, as follows:

(1) Casting Quench (§ 464.35(b) and § 464.36(b)):

23. chloroform (trichloromethane)
34. 2,4-dimethylphenol

(2) Dust Collection Scrubber (§ 464.35(c) and § 464.36(b)):

1. acenaphthene
23. chloroform (trichloromethane)
31. 2,4-dichlorophenol
34. 2,4-dimethylphenol
39. fluoranthene
44. methylene chloride (dichloromethane)
55. naphthalene
64. pentachlorophenol
65. phenol
66. bis(2-ethylhexyl)phthalate
67. butyl benzyl phthalate
68. di-n-butyl phthalate
70. diethyl phthalate
71. dimethyl phthalate
72. benzo (a)anthracene (1,2-benzanthracene)
76. chrysene
77. acenaphthylene
78. anthracene
80. fluorene
81. phenanthrene
84. pyrene

(3) Investment Casting (§ 464.35(e) and § 464.36(e)):

23. chloroform (trichloromethane)
44. methylene chloride (dichloromethane)
66. bis (2-ethylhexyl) phthalate
77. acenaphthylene
84. pyrene

(4) Melting Furnace Scrubber (§ 464.35(f) and § 464.36(f)):

23. chloroform (trichloromethane)
31. 2,4-dichlorophenol
34. 2,4-dimethylphenol
39. fluoranthene
44. methylene chloride (dichloromethane)
55. naphthalene
65. phenol
66. bis (2-ethylhexyl) phthalate
67. butyl benzyl phthalate
68. di-n-butyl phthalate
72. benzo (a)anthracene (1,2-benzanthracene)
76. chrysene
77. acenaphthylene
78. anthracene
80. fluorene
81. phenanthrene
84. pyrene

(5) Mold Cooling (§ 464.35(g) and § 464.36(g)):

23. chloroform (trichloromethane)
34. 2,4-dimethylphenol

(6) Slag Quench (§ 464.35(h) and § 464.36(h)):

34. 2,4-dimethylphenol
71. dimethyl phthalate

(7) Wet Sand Reclamation (§ 464.35(i) and § 464.36(i)):

1. acenaphthene

34. 2,4-dimethylphenol
39. fluoranthene
44. methylene chloride (dichloromethane)
55. naphthalene
65. phenol
66. bis (2-ethylhexyl) phthalate
68. di-n-butyl phthalate
70. diethyl phthalate
71. dimethyl phthalate
72. benzo(a)anthracene (1,2-benzanthracene)
77. acenaphthylene
84. pyrene

(b) *Cast Iron*. An iron containing carbon in excess of the solubility in the austentite that exists in the alloy at the eutectic temperature. Cast iron also is defined here to include any iron-carbon alloys containing 1.2 percent or more carbon by weight.

(c) *Ductile Iron*. A cast iron that has been treated while molten with a master alloy containing an element such as magnesium or cerium to induce the formation of free graphite as nodules or spherules, which imparts a measurable degree of ductility to the cast metal.

(d) *Gray Iron*. A cast iron that gives a gray fracture due to the presence of flake graphite.

(e) *Malleable Iron*. A cast iron made by a prolonged anneal of white cast iron in which decarburization or graphitization, or both, take place to eliminate some or all of the cementite. Graphite is present in the form of temper carbon.

(f) *Steel*. An iron-base alloy containing carbon, manganese, and often other alloying elements. Steel is defined here to include only those iron-carbon alloys containing less than 1.2 percent carbon by weight.

(g) The ''primary metal cast'' shall mean the metal that is poured in the greatest quantity at an individual plant.

(h) *Multiple Ferrous Melting Furnace Scrubber Configuration*. A multiple ferrous melting furnace scrubber configuration is a configuration where two or more discrete wet scrubbing devices are employed in series in a single melting furnace exhaust gas stream. The ferrous melting furnace scrubber mass allowance shall be given to each discrete wet scrubbing device that has an associated wastewater discharge in a multiple ferrous melting furnace scrubber configuration. The mass allowance for each discrete wet scrubber shall be identical and based on the air flow of the exhaust gas stream that passes through the multiple scrubber configuration.

(i) *Discrete Wet Scrubbing Device*. A discrete wet scrubbing device is a distinct, stand-alone device that removes particulates and fumes from a contaminated gas stream by bringing the gas stream into contact with a scrubber liquor, usually water, and from which there is a wastewater discharge. Examples of discrete wet scrubbing devices are: Spray towers and chambers, venturi scrubbers (fixed and variable), wet caps, packed bed scrubbers, quenchers, and orifice scrubbers. Semi-wet scrubbing devices where water is added and totally evaporates prior to dry air pollution control are not considered to be discrete wet scrubbing devices. Ancillary scrubber operations such as fan washes and backwashes are not considered to be discrete wet scrubber devices. These ancillary operations are covered by the mass limitations of the associated scrubber. Aftercoolers are not considered to be discrete wet scrubbing devices, and water discharges from aftercooling are not regulated as a process wastewater in this category.

§ 464.32 Effluent limitations guidelines representing the degree of effluent reduction attainable by the application of the best practicable control technology currently available.

Except as provided in 40 CFR 125.30 through 125.32, any existing point source subject to this subpart must achieve the following effluent limitations representing the degree of effluent reduction attainable by the application of the best practicable control technology currently available, except that non-continuous dischargers shall not be subject to the maximum day and maximum for monthly average mass (kg/1,000 kkg or lb/million lb of metal poured; kg/1,000 kkg or lb/million lb of sand reclaimed; kg/62.3 million Sm^3 or lb/billion SCF of air scrubbed) effluent limitations for copper, lead, zinc, total phenols, oil and grease, and TSS. For non-continuous dischargers, annual average mass limitations and maximum day and maximum for monthly average concentration (mg/l)

limitations shall apply. Concentration limitations and annual average mass limitations shall only apply to non-continuous dischargers.

(a) *Casting Cleaning Operations.*

BPT EFFLUENT LIMITATIONS

Pollutant or pollutant property	Maximum for any 1 day	Maximum for monthly average
	kg/1,000 kkg (pounds per million pounds) of metal poured	
Copper (T)	0.0129	0.0071
Lead (T)	0.0353	0.0174
Zinc (T)	0.0656	0.025
Oil and grease	1.34	0.446
TSS	1.7	0.67
pH	(1)	(1)

[1] Within the range of 7.0 to 10.0 at all times.

	Maximum for any 1 day	Maximum for monthly average	Annual average [1]
	(mg/l) [2]	(mg/l) [2]	
Copper (T)	0.29	0.16	0.0029
Lead (T)	0.79	0.39	0.0098
Zinc (T)	1.47	0.56	0.0179
Oil and grease	30	10	0.223
TSS	38	15	0.446
pH	(3)	(3)	(3)

[1] kg/1,000 kkg (pounds per million pounds) of metal poured.
[2] These concentrations must be multiplied by the ratio (5.33/x) where x is the actual normalized process wastewater flow (in gallons per 1,000 pounds of metal poured) for a specific plant.
[3] Within the range of 7.0 to 10.0 at all times.

(b) *Casting Quench Operations*

BPT EFFLUENT LIMITATIONS

Pollutant or pollutant property	Maximum for any 1 day	Maximum for monthly average
	kg/1,000 kkg (pounds per million pounds) of metal poured	
Copper (T)	0.0138	0.0076
Lead (T)	0.0376	0.0185
Zinc (T)	0.0699	0.0266
Oil and grease	1.43	0.476
TSS	1.81	0.713
pH	(1)	(1)

[1] Within the range of 7.0 to 10.0 at all times.

	Maximum for any 1 day	Maximum for monthly average	Annual average [1]
	(mg/l) [2]	(mg/l) [2]	
Copper (T)	0.29	0.16	0.0031
Lead (T)	0.79	0.39	0.0105
Zinc (T)	1.47	0.56	0.019
Oil and grease	30	10	0.238
TSS	38	15	0.476
pH	(3)	(3)	(3)

[1] kg/1,000 kkg (pounds per million pounds) of metal poured.
[2] These concentrations must be multiplied by the ratio of (5.7/x) where x is the actual normalized process wastewater flow (in gallons per 1,000 pounds of metal poured) for a specific plant.
[3] Within the range of 7.0 to 10.0 at all times.

(c) *Dust Collection Scrubber Operations.*

BPT EFFLUENT LIMITATIONS

Pollutant or pollutant property	Maximum for any 1 day	Maximum for monthly average
	kg/62.3 million Sm^3 (pounds per billion SCF) of air scrubbed	
Copper (T)	0.218	0.12
Lead (T)	0.593	0.293
Zinc (T)	1.1	0.421
Total phenols	0.656	0.225
Oil and grease	22.5	7.51
TSS	28.5	11.3
pH	(1)	(1)

[1] Within the range of 7.0 to 10.0 at all times.

	Maximum for any 1 day	Maximum for monthly average	Annual average [1]
	(mg/l) [2]	(mg/l) [2]	(mg/l) [2]
Copper (T)	0.29	0.16	0.0488
Lead (T)	0.79	0.39	0.165
Zinc (T)	1.47	0.56	0.3
Total phenols	0.86	0.3	0.15
Oil and grease	30	10	3.76
TSS	38	15	7.51
pH	(3)	(3)	(3)

[1] kg/62.3 million Sm^3 (pounds per billion SCF) of air scrubbed.
[2] These concentrations must be multiplied by the ratio (0.090/x) where x is the actual normalized process wastewater flow (in gallons per 1,000 SCF of air scrubbed) for a specific plant.
[3] Within the range of 7.0 to 10.0 at all times.

(d) *Grinding Scrubber Operations.* No discharge of process wastewater pollutants to navigable waters.

(e) *Investment Casting.*

BPT EFFLUENT LIMITATIONS

Pollutant or pollutant property	Maximum for any 1 day	Maximum for monthly average
	kg/1,000 kkg (pounds per million pounds) of metal poured	
Copper (T)	3.19	1.76
Lead (T)	8.7	4.3
Zinc (T)	16.2	6.17
Oil and grease	330	110
TSS	419	165
pH	(1)	(1)

[1] Within the range of 7.0 to 10.0 at all times.

	Maximum for any 1 day	Maximum for monthly average	Annual average [1]
	(mg/l) [2]	(mg/l) [2]	
Copper (T)	0.29	0.16	0.716
Lead (T)	0.79	0.39	2.42
Zinc (T)	1.47	0.56	4.41
Oil and grease	30	10	55.1
TSS	38	15	110
pH	(3)	(3)	(3)

[1] kg/1,000 kkg (pounds per million pounds) of metal poured.
[2] These concentrations must be multiplied by the ratio of (1,320/x) where x is the actual normalized process wastewater flow (in gallons per 1,000 pounds of metal poured) for a specific plant.
[3] Within the range of 7.0 to 10.0 at all times.

(f) *Melting Furnace Scrubber Operations.*

BPT EFFLUENT LIMITATIONS

Pollutant or pollutant property	Maximum for any 1 day	Maximum for monthly average
	kg/62.3 million Sm^3 (pounds per billion SCF) of air scrubbed	
Copper (T)	1.02	0.561
Lead (T)	2.77	1.37
Zinc (T)	5.15	1.96
Total phenols	3.01	1.05
Oil and grease	105	35
TSS	133	52.6
pH	(1)	(1)

[1] Within the range of 7.0 to 10.0 at all times.

	Maximum for any 1 day	Maximum for monthly average	Annual average [1]
	(mg/l) [2]	(mg/l) [2]	
Copper (T)	0.29	0.16	0.228
Lead (T)	0.79	0.39	0.771
Zinc (T)	1.47	0.56	1.4
Total phenols	0.86	0.3	0.701
Oil and grease	30	10	17.5
TSS	38	15	35
pH	(3)	(3)	(3)

[1] kg/62.3 million Sm^3 (pounds per billion SCF) or air scrubbed.
[2] These concentrations must be multiplied by the ratio of (0.42/x) where x is the actual normalized process wastewater flow (in gallons per 1,000 SCF of air scrubbed) for a specific plant.
[3] Within the range of 7.0 to 10.0 at all times.

(g) *Mold Cooling Operations.*

BPT EFFLUENT LIMITATIONS

Pollutant or pollutant property	Maximum for any 1 day	Maximum for monthly average
	kg/1,000 kkg (pounds per million pounds) of metal poured	
Copper (T)	0.0428	0.0236
Lead (T)	0.117	0.0576
Zinc (T)	0.217	0.0827
Oil and grease	4.43	1.48
TSS	5.61	2.22
pH	(1)	(1)

[1] Within the range of 7.0 to 10.0 at all times.

	Maximum for any 1 day	Maximum for monthly average	Annual average [1]
	(mg/l) [2]	(mg/l) [2]	
Copper (T)	0.29	0.16	0.0096
Lead (T)	0.79	0.39	0.0325
Zinc (T)	1.47	0.56	0.0591
Oil and grease	30	10	0.738
TSS	38	15	1.48
pH	(3)	(3)	(3)

[1] kg/1,000 kkg (pounds per million pounds) of metal poured
[2] These concentrations must be multiplied by the ratio of (17.7/x) where x is the actual normalized process wastewater flow (in gallons per 1,000 pounds of metal poured) for a specific plant.
[3] Within the range of 7.0 to 10.0 at all times.

(h) *Slag Quench Operations.*

BPT EFFLUENT LIMITATIONS

Pollutant or pollutant property	Maximum for any 1 day	Maximum for monthly average
	kg/1,000 kkg (pounds per million pounds) of metal poured	
Cooper (T)	0.0527	0.0291
Lead (T)	0.144	0.0709
Zinc (T)	0.267	0.102
Oil and grease	5.46	1.82
TSS	6.91	2.73
pH	(1)	(1)

[1] Within the range 7.0 to 10.0 at all times.

	Maximum for any 1 day	Maximum for monthly average	Annual average [1]
	(mg/l) [2]	(mg/l) [2]	
Copper (T)	0.29	0.16	0.0118
Lead (T)	0.79	0.39	0.04
Zinc (T)	1.47	0.56	0.0728
Oil and grease	30	10	0.909
TSS	38	15	1.82
pH	(3)	(3)	(3)

[1] kg/1,000 kkg (pounds per million pounds) of metal poured.
[2] These concentrations must be multiplied by the ratio of (21.8/x) where x is the actual normalized process wasterwater flow (in gallons per 1,000 pounds of metal poured) for a specific plant.
[3] Within the range of 7.0 to 10.0 at all times.

(i) *Wet Sand Reclamation Operations.*

BPT EFFLUENT LIMITATIONS

Pollutant or pollutant property	Maximum for any 1 day	Maximum for monthly average
	kg/1,000 kkg (pounds per million pounds) of sand reclaimed	
Cooper (T)	0.217	0.12
Lead (T)	0.59	0.291
Zinc (T)	1.1	0.418
Total phenols	0.642	0.224
Oil and grease	22.4	7.47
TSS	28.4	11.2
pH	(1)	(1)

[1] Within the range of 7.0 to 10.0 at all times.

	Maximum for any 1 day	Maximum for monthly average	Annual average [1]
	(mg/l) [2]	(mg/l) [2]	
Cooper (T)	0.29	0.16	0.0485
Lead (T)	0.79	0.39	0.164
Zinc (T)	1.47	0.56	0.299
Total phenols	0.86	0.3	0.149
Oil and grease	30	10	3.73
TSS	38	15	7.47
pH	(3)	(3)	(3)

[1] kg/1,000 kkg (pounds per million pounds) of sand reclaimed.
[2] These concentrations must be multiplied by the ratio of (89.5/x) where x is the actual normalized process wastewater flow (in gallons per 1,000 pounds of sand reclaimed) for a specific plant.
[3] Within the range of 7.0 to 10.0 at all times.

[50 FR 45247, Oct. 30, 1985; 51 FR 21761, June 16, 1986]

§ 464.33 Effluent limitations guidelines representing the degree of effluent reduction attainable by the application of the best available technology economically achievable.

Except as provided in 40 CFR 125.30 through 125.32, any existing point source subject to this subpart must achieve the following effluent limitations representing the degree of effluent reduction attainable by the application of the best available technology economically achievable, except that non-continuous dischargers shall not be subject to the maximum day and maximum for monthly average mass (kg/1,000 kkg or lb/million lb of metal poured; kg/1,000 kkg or lb/million lb of sand reclaimed; kg/62.3 million Sm^3 or lb/billion SCF of air scrubbed) effluent limitations for copper, lead, zinc, and total phenols. For non-continuous dischargers, annual average mass limitations and maximum day and maximum for monthly average concentration (mg/l) limitations shall apply. Concentration limitations and annual average mass limitations shall only apply to non-continuous dischargers.

(a) *Casting Cleaning Operations.* (1) Applicable to plants that are casting primarily ductile or gray iron and to plants that are casting primarily malleable iron where greater than 3,557 tons of metal are poured per year.

BAT EFFLUENT LIMITATIONS

Pollutant or pollutant property	Maximum for any 1 day	Maximum for monthly average
	kg/1,000 kkg (pounds per million pounds) of metal poured	
Copper (T)	0.0129	0.0071
Lead (T)	0.0237	0.0116
Zinc (T)	0.0437	0.0165

	Maximum for any 1 day	Maximum for monthly average	Annual average [1]
	(mg/l) [2]	(mg/l) [2]	
Copper (T)	0.29	0.16	0.0029
Lead (T)	0.53	0.26	0.0067
Zinc (T)	0.98	0.37	0.0116

[1] kg/1,000 kkg (pounds per million pounds) of metal poured.
[2] These concentrations must be multiplied by the ratio of (5.33/x) where x is the actual normalized process wastewater flow (in gallons per 1,000 pounds of metal poured) for a specific plant.

(2) Applicable to plants that are casting primarily steel and to plants that are casting primarily malleable iron where equal to or less than 3,557 tons of metal are poured per year.

BAT EFFLUENT LIMITATIONS

Pollutant or pollutant property	Maximum for any 1 day	Maximum for monthly average
	kg/1,000 kkg (pounds per million pounds) of metal poured	
Copper (T)	0.0129	0.0071
Lead (T)	0.0353	0.0174
Zinc (T)	0.0656	0.025

	Maximum for any 1 day	Maximum for monthly average	Annual average [1]
	(mg/l) [2]	(mg/l) [2]	
Copper (T)	0.29	0.16	0.0029
Lead (T)	0.79	0.39	0.0098
Zinc (T)	1.47	0.56	0.0179

[1] kg/1,000 kkg (pounds per million pounds) of metal poured.
[2] These concentrations must be multiplied by the ratio of (5.33/x) where x is the actual normalized process wastewater flow (in gallons per 1,000 pounds of metal poured) for a specific plant.

(b) *Casting Quench Operations.* (1) Applicable to plants that are casting primarily ductile or gray iron and to plants that are casting primarily malleable iron where greater than 3,557 tons of metal are poured per year.

BAT EFFLUENT LIMITATIONS

Pollutant or pollutant property	Maximum for any 1 day	Maximum for monthly average
	kg/100 kkg (pounds per million pounds) of metal poured	
Copper (T)	0.0138	0.0076
Lead (T)	0.0252	0.0124
Zinc (T)	0.0466	0.0176

	Maximum for any 1 day	Maximum for monthly average	Annual average[1]
	(mg/l)[2]	(mg/l)[2]	
Copper (T)	0.29	0.16	0.0031
Lead (T)	0.53	0.26	0.0071
Zinc (T)	0.98	0.37	0.0124

[1] kg/1,000 kkg (pounds per million pounds) of metal poured.
[2] These concentrations must be multiplied by the ratio of (5.7/x) where x is the actual normalized process wastewater flow (in gallons per 1,000 pounds of metal poured) for a specific plant.

(2) Applicable to plants that are casting primarily steel and to plants that are casting primarily malleable iron where equal to or less than 3,557 tons of metal are poured per year.

BAT EFFLUENT LIMITATIONS

Pollutant or pollutant property	Maximum for any 1 day	Maximum for monthly average
	kg/1,000 kkg (pounds per million pounds) of metal poured	
Copper (T)	0.0138	0.0076
Lead (T)	0.0376	0.0185
Zinc (T)	0.0699	0.0266

	Maximum for any 1 day	Maximum for monthly average	Annual average[1]
	(mg/l)[2]	(mg/l)[2]	
Copper (T)	0.29	0.16	0.0031
Lead (T)	0.79	0.39	0.0105
Zinc (T)	1.47	0.56	0.019

[1] kg/1,000 kkg (pounds per million pounds) of metal poured.
[2] These concentrations must be multiplied by the ratio of (5.7/x) where x is the actual normalized process wastewater flow (in gallons per 1,000 pounds of metal poured) for a specific plant.

(c) *Dust Collection Scrubber Operations.* (1) Applicable to plants that are casting primarily ductile or gray iron and to plants that are casting primarily malleable iron where greater than 3,557 tons of metal are poured per year.

BAT EFFLUENT LIMITATIONS

Pollutant or pollutant property	Maximum for any 1 day	Maximum for monthly average
	kg/62.3 million Sm^3 (pounds per billion SCF) of air scrubbed	
Copper (T)	0.218	0.12
Lead (T)	0.398	0.195
Zinc (T)	0.736	0.278
Total phenols	0.646	0.225

	Maximum for any 1 day	Maximum for monthly average	Annual average[1]
	(mg/l)[2]	(mg/l)[2]	
Copper (T)	0.29	0.16	0.0488
Lead (T)	0.53	0.26	0.113
Zinc (T)	0.98	0.37	0.195
Total phenols	0.86	0.3	0.15

[1] kg/62.3 million Sm^3 (pounds per billion SCF) of air scrubbed.
[2] These concentrations must be multiplied by the ratio of (0.09/x) where x is the actual normalized process wastewater flow (in gallons per 1,000 SCF of air scrubbed) for a specific plant.

(2) Applicable to plants that are casting primarily steel and to plants that are casting primarily malleable iron where equal to or less than 3,557 tons of metal are poured per year.

BAT EFFLUENT LIMITATIONS

Pollutant or pollutant property	Maximum for any 1 day	Maximum for monthly average
	kg/62.3 million Sm^3 (pounds per billion SCF) of air scrubbed	
Copper (T)	0.218	0.12
Lead (T)	0.593	0.293
Zinc (T)	1.1	0.421
Total phenols	0.656	0.225

	Maximum for any 1 day	Maximum for monthly average	Annual average[1]
	(mg/l)[2]	(mg/l)[2]	
Copper (T)	0.29	0.16	0.0488
Lead (T)	0.79	0.39	0.165
Zinc (T)	1.47	0.56	0.3
Total phenols	0.86	0.3	0.15

[1] kg/62.3 million Sm^3 (pounds per billion SCF) of air scrubbed.
[2] These concentrations must be multiplied by the ratio of (0.09/x) where x is the actual normalized process wastewater flow (in gallons per 1,000 SCF of air scrubbed) for a specific plant.

(d) *Grinding Scrubber Operations.* No discharge of process wastewater pollutants to navigable waters.

(e) *Investment Casting.* (1) Applicable to plants that are casting primarily ductile or gray iron and to plants that are casting primarily malleable iron where greater than 3,557 tons of metal are poured per year.

BAT EFFLUENT LIMITATIONS

Pollutant or pollutant property	Maximum for any 1 day	Maximum for monthly average
	kg/1,000 kkg (pounds per million pounds) of metal poured	
Copper (T)	3.19	1.76
Lead (T)	5.84	2.86
Zinc (T)	10.8	4.07

	Maximum for any 1 day	Maximum for monthly average	Annual average [1]
	(mg/l) [2]	(mg/l) [2]	
Copper (T)	0.29	0.16	0.716
Lead (T)	0.53	0.26	1.65
Zinc (T)	0.98	0.37	2.86

[1] kg/1,000 kkg (pounds per million pounds) of metal poured.
[2] These concentrations must be multiplied by the ratio of (1,320/x) where x is the actual normalized process wastewater flow (in gallons per 1,000 pounds of metal poured) for a specific plant.

(2) Applicable to plants that are casting primarily steel and to plants that are casting primarily malleable iron where equal to or less than 3,557 tons of metal are poured per year.

BAT EFFLUENT LIMITATIONS

Pollutant or pollutant property	Maximum for any 1 day	Maximum for monthly average
	kg/1,000 kkg (pounds per million pounds) of metal poured	
Copper (T)	3.19	1.76
Lead (T)	8.7	4.3
Zinc (T)	16.2	6.17

	Maximum for any 1 day	Maximum for monthly average	Annual average [1]
	(mg/l) [2]	(mg/l) [2]	
Copper (T)	0.29	0.16	0.716
Lead (T)	0.79	0.39	2.42
Zinc (T)	1.47	0.56	4.41

[1] kg/1,000 kkg (pounds per million pounds) of metal poured.
[2] These concentrations must be multiplied by the ratio of (1,320/x) where x is the actual normalized process wastewater flow (in gallons per 1,000 pounds of metal poured) for a specific plant.

(f) *Melting Furnace Scrubber Operations.* (1) Applicable to plants that are casting primarily ductile or gray iron and to plants that are casting primarily malleable iron where greater than 3,557 tons of metal are poured per year.

BAT EFFLUENT LIMITATIONS

Pollutant or pollutant property	Maximum for any 1 day	Maximum for monthly average
	kg/62.3 million Sm^3 (pounds per billion SCF) of air scrubbed	
Copper (T)	1.02	0.561
Lead (T)	1.86	0.911
Zinc (T)	3.44	1.3
Total Phenols	3.01	1.05

	Maximum for any 1 day	Maximum for monthly average	Annual average[1]
	(mg/l) [2]	(mg/l) [2]	
Copper (T)	0.29	0.16	0.228
Lead (T)	0.53	0.26	0.526
Zinc (T)	0.98	0.37	0.911
Total Phenols	0.86	0.3	0.701

[1] kg/62.3 million Sm^3 (pounds per billion SCF) of air scrubbed
[2] These concentrations must be multiplied by the ratio of (0.42/x) where x is the actual normalized process wastewater flow (in gallons per 1,000 SCF of air scrubbed) for a specific plant.

(2) Applicable to plants that are casting primarily steel and to plants that are casting primarily malleable iron where equal to or less than 3,557 tons of metal are poured per year.

BAT EFFLUENT LIMITATIONS

Pollutant or pollutant property	Maximum for any 1 day	Maximum for monthly average
	kg/62.3 million Sm^3 (pounds per billion SCF) of air scrubbed	
Copper (T)	1.02	0.561
Lead (T)	2.77	1.37
Zinc (T)	5.15	1.96
Total Phenols	3.01	1.05

	Maximum for any 1 day	Maximum for monthly average	Annual average[1]
	(mg/l) [2]	(mg/l) [2]	
Copper (T)	0.29	0.16	0.228
Lead (T)	0.79	0.39	0.771
Zinc (T)	1.47	0.56	1.4
Total Phenols	0.86	0.3	0.701

[1] kg/62.3 million Sm^3 (pounds per billion SCF) of air scrubbed.
[2] These concentrations must be multiplied by the ratio of (0.42/x) where x is the actual normalized process wastewater flow (in gallons per 1,000 SCF of air scrubbed) for a specific plant.

(g) *Mold Cooling Operations.* (1) Applicable to plants that are casting primarily ductile or gray iron and to plants that are casting primarily malleable iron where greater than 3,557 tons of metal are poured per year.

BAT EFFLUENT LIMITATIONS

Pollutant or pollutant property	Maximum for any 1 day	Maximum for monthly average
	kg/1,000 kkg (pounds per million pounds) of metal poured	
Copper (T)	0.0428	0.0236
Lead (T)	0.0783	0.0384
Zinc (T)	0.145	0.0546

	Maximum for any 1 day	Maximum for monthly average	Annual average[1]
	(mg/l)[2]	(mg/l)[2]	
Copper (T)	0.29	0.16	0.0096
Lead (T)	0.53	0.26	0.0222
Zinc (T)	0.98	0.37	0.0384

[1] kg/1,000 kkg (pounds per million pounds) of metal poured.
[2] These concentrations must be multiplied by the ratio of (17.7/x) where x is the actual normalized process wastewater flow (in gallons per 1,000 pounds of metal poured) for a specific plant.

(2) Applicable to plants that are casting primarily steel and to plants that are casting primarily malleable iron where equal to or less than 3,557 tons of metal are poured per year.

BAT EFFLUENT LIMITATIONS

Pollutant or pollutant property	Maximum for any 1 day	Maximum for monthly average
	kg/1,000 kkg (pounds per million pounds) of metal poured	
Copper (T)	0.0428	0.0236
Lead (T)	0.117	0.0576
Zinc (T)	0.217	0.0827

	Maximum for any 1 day	Maximum for monthly average	Annual average[1]
	(mg/l)[2]	(mg/l)[2]	
Copper (T)	0.29	0.16	0.0096
Lead (T)	0.79	0.39	0.0325
Zinc (T)	1.47	0.56	0.0591

[1] kg/1,000 kkg (pounds per million pounds) of metal poured.
[2] These concentrations must be multiplied by the ratio of (17.7/x) where x is the actual normalized process wastewater flow (in gallons per 1,000 pounds of metal poured) for a specific plant.

(h) *Slag Quench Operations.* (1) Applicable to plants that are casting primarily ductile or gray iron and to plants that are casting primarily malleable iron where greater than 3,557 tons of metal are poured per year.

BAT EFFLUENT LIMITATIONS

Pollutant or pollutant property	Maximum for any 1 day	Maximum for monthly average
	kg/1,000 kkg (pounds per million pounds) of metal poured	
Copper (T)	0.0527	0.0291
Lead (T)	0.0964	0.0473
Zinc (T)	0.178	0.0673

	Maximum for any 1 day	Maximum for monthly average	Annual average[1]
	(mg/l)[2]	(mg/l)[2]	
Copper (T)	0.29	0.16	0.0118
Lead (T)	0.53	0.26	0.0273
Zinc (T)	0.98	0.37	0.0473

[1] Kg/1,000 kkg (pounds per million pounds) of metal poured.
[2] These concentrations must be multiplied by the ratio of (21.8/x) where x is the actual normalized process wastewater flow (in gallons per 1,000 pounds of metal poured) for a specific plant.

(2) Applicable to plants that are casting primarily steel and to plants that are casting primarily malleable iron where equal to or less than 3,557 tons of metal are poured per year.

BAT EFFLUENT LIMITATIONS

Pollutant or pollutant property	Maximum for any 1 day	Maximum for monthly average
	kg/1,000 kkg (pounds per million pounds) of metal poured	
Copper (T)	0.0527	0.0291
Lead (T)	0.144	0.0709
Zinc (T)	0.267	0.102

	Maximum for any 1 day	Maximum for monthly average	Annual average[1]
	(mg/l)[2]	(mg/l)[2]	
Copper (T)	0.29	0.16	0.0118
Lead (T)	0.79	0.39	0.04
Zinc (T)	1.47	0.56	0.0728

[1] kg/1,000 kkg (pounds per million pounds) of metal poured.
[2] These concentrations must be multiplied by the ratio of (21.8/x) where x is the actual normalized process wastewater flow (in gallons per 1,000 pounds of metal poured) for a specific plant.

(i) *Wet Sand Reclamation Operations.* (1) Applicable to plants that are casting primarily ductible or gray iron and to plants that are casting malleable iron where greater than 3,557 tons of metal are poured per year.

BAT EFFLUENT LIMITATIONS

Pollutant or pollutant property	Maximum for any 1 day	Maximum for monthly average
	kg/1,000 kkg (pounds per million pounds) of sand reclaimed	
Copper (T)	0.217	0.12
Lead (T)	0.396	0.194
Zinc (T)	0.732	0.276
Total Phenols	0.642	0.224

	Maximum for any 1 day	Maximum for monthly average	Annual average [1]
	(mg/l) [2]	(mg/l) [2]	
Copper (T)	0.29	0.16	0.0485
Lead (T)	0.53	0.26	0.112
Zinc (T)	0.98	0.37	0.194
Total Phenols	0.86	0.3	0.149

[1] kg/1000 kkg (pounds per million pounds) of sand reclaimed.
[2] These concentrations must be multiplied by the ratio of (89.5/x) where x is the actual normalized process wastewater flow (in gallons per 1,000 pounds of sand reclaimed) for a specific plant.

(2) Applicable to plants that are casting primarily steel and to plants that are casting primarily malleable iron where equal to or less than 3,557 tons of metal are poured per year.

BAT EFFLUENT LIMITATIONS

Pollutant or pollutant property	Maximum for any 1 day	Maximum for monthly average
	kg/1,000 kkg (pounds per million pounds) of sand reclaimed	
Copper (T)	0.217	0.12
Lead (T)	0.59	0.291
Zinc (T)	1.1	0.418
Total Phenols	0.642	0.224

PSNS

	Maximum for any 1 day	Maximum for monthly average	Annual average [1]
	(mg/l) [2]	(mg/l) [2]	
Copper (T)	0.29	0.16	0.0485
Lead (T)	0.79	0.39	0.164
Zinc (T)	1.47	0.56	0.299
Total Phenols	0.86	0.3	0.149

[1] kg/1000 kkg (pounds per million pounds) of sand reclaimed.
[2] These concentrations must be multiplied by the ratio of (89.5/x) where x is the actual normalized process wastewater flow (in gallons per 1,000 pounds of sand reclaimed) for a specific plant.

[50 FR 45247, Oct. 30, 1985; 51 FR 21761, June 16, 1986]

§ 464.34 New source performance standards.

Any new source subject to this subpart must achieve the following new source performance standards (NSPS), except that non-continuous dischargers shall not be subject to the maximum day and maximum for monthly average mass (kg/1,000 kkg or lb/million lb of metal poured; kg/1,000 kkg or lb/million lb of sand reclaimed; kg/62.3 million Sm^3 or lb/billion SCF of air scrubbed) effluent standards for copper, lead, zinc, total phenols, oil and grease, and TSS. For non-continuous dischargers, annual average mass standards and maximum day and maximum for monthly average concentration (mg/l) standards shall apply. Concentration standards and annual average mass standards shall only apply to non-continuous dischargers.

(a) *Casting Cleaning Operations.* (1) Applicable to plants that are casting primarily ductile or gray iron and to plants that are casting primarily malleable iron where greater than 3,557 tons of metal are poured per year.

NSPS

Pollutant or pollutant property	Maximum for any 1 day	Maximum for monthly average
	kg/1,000 kkg (pounds per million pounds) of metal poured	
Copper (T)	0.0129	0.0071
Lead (T)	0.0237	0.0116
Zinc (T)	0.0437	0.0165
Oil and grease	1.34	0.446
TSS	0.67	0.536
pH	([1])	([1])

[1] Within the range of 7.0 to 10.0 at all times.

	Maximum for any 1 day	Maximum for monthly average	Annual average [1]
	(mg/l) [2]	(mg/l) [2]	
Copper (T)	0.29	0.16	0.0029
Lead (T)	0.53	0.26	0.0067
Zinc (T)	0.98	0.37	0.0116
Oil and grease	30	10	0.223
TTS	15	12	0.116
pH	([3])	([3])	([3])

[1] kg/1000 kkg (pounds per million pounds) of metal poured.
[2] These concentrations must be multiplied by the ratio of (5.33/x) where x is the actual normalized process wastewater flow (in gallons per 1,000 pounds of metal poured) for a specific plant.
[3] Within the range of 7.0 to 10.0 at all times.

(2) Applicable to plants that are casting primarily steel and to plants that

are casting primarily malleable iron where equal to or less than 3,557 tons of metal are poured per year.

NSPS

Pollutant or pollutant property	Maximum for any 1 day	Maximum for monthly average
	kg/1,000 kkg (pounds per million pounds) of metal poured	
Copper (T)	0.0129	0.0071
Lead (T)	0.0353	0.0174
Zinc (T)	0.0656	0.025
Oil and grease	1.34	0.446
TSS	1.7	0.67
pH	(1)	(1)

1 Within the range of 7.0 to 10.0 at all times.

	Maximum for any 1 day	Maximum for monthly average	Annual average 1
	(mg/l) 2	(mg/l) 2	
Copper (T)	0.29	0.16	0.0029
Lead (T)	0.79	0.39	0.0098
Zinc (T)	1.47	0.56	0.0179
Oil and grease	30	10	0.223
TTS	38	15	0.446
pH	(3)	(3)	(3)

1 kg/1,000 kkg (pounds per million pounds) of metal poured.
2 These concentrations must be multiplied by the ratio of (5.35/x) where x is the actual normalized process wastewater flow (in gallons per 1,000 pounds of metal poured) for a specific plant.
3 Within the range of 7.0 to 10.0 at all times.

(b) *Casting Quench Operations.* (1) Applicable to plants that are casting primarily ductile or gray iron and to plants that are casting primarily malleable iron where greater than 3,557 tons of metal are poured per year.

NSPS

Pollutant or pollutant property	Maximum for any 1 day	Maximum for monthly average
	kg/1,000 kkg (pounds per million pounds) of metal poured	
Copper (T)	0.0138	0.0076
Lead (T)	0.0252	0.0124
Zinc (T)	0.0466	0.0176
Oil and grease	1.43	0.476
TSS	0.713	0.571
pH	(1)	(1)

1 Within the range of 7.0 to 10.0 at all times.

	Maximum for any 1 day	Maximum for monthly average	Annual average 1
	(mg/l) 2	(mg/l) 2	
Copper (T)	0.29	0.16	0.0031
Lead (T)	0.53	0.26	0.0071
Zinc (T)	0.98	0.37	0.0124
Oil and grease	30	10	0.238
TSS	15	12	0.124
pH	(3)	(3)	(3)

1 Kg/1000 kkg (pounds per million pounds) of metal poured.
2 Within the range of 7.0 to 10.0 at all times.
3 These concentrations must be multiplied by the ratio of (5.7/x) where x is the actual normalized process wastewater flow (in gallons per 1,000 pounds of metal poured) for a specific plant.

(2) Applicable to plants that are casting primarily steel and to plants that are casting primarily malleable iron where equal to or less than 3,557 tons of metal are poured per year.

NSPS

Pollutant or pollutant property	Maximum for any 1 day	Maximum for monthly average
	kg/1,000 kkg (pounds per million pounds) of metal poured	
Copper (T)	0.0138	0.0076
Lead (T)	0.0376	0.0185
Zinc (T)	0.0699	0.0266
Oil and grease	1.43	0.476
TSS	1.81	0.713
pH	(1)	(1)

1 Within the range of 7.0 to 10.0 at all times.

	Maximum for any 1 day	Maximum for monthly average	Annual average 1
	(mg/l) 2	(mg/l) 2	
Copper (T)	0.29	0.16	0.0031
Lead (T)	0.79	0.39	0.0105
Zinc (T)	1.47	0.56	0.019
Oil and grease	30	10	0.238
TSS	38	15	0.476
pH	(3)	(3)	(3)

1 Kg/1000 kkg (pounds per million pounds) of metal poured.
2 These concentrations must be multiplied by the ratio of (5.7/x) where x is the actual normalized process wastewater flow (in gallons per 1,000 pounds of metal poured) for a specific plant.
3 Within the range of 7.0 to 10.0 at all times.

(c) *Dust Collection Scrubber Operations.* (1) Applicable to plants that are casting primarily ductible or gray iron and to plants that are casting primarily malleable iron where greater than 3,557 tons of metal are poured per year.

NSPS

Pollutant or pollutant property	Maximum for any 1 day	Maximum for monthly average
	kg/62.3 million Sm^3 (pounds per billion SCF) of air scrubbed	
Copper (T)	0.218	0.12
Lead (T)	0.398	0.195
Zinc (T)	0.736	0.278
Total Phenols	0.646	0.225
Oil and grease	22.5	7.51
TSS	11.3	9.01
pH	(1)	(1)

1 Within the range of 7.0 to 10.0 at all times.

	Maximum for any 1 day	Maximum for monthly average	Annual average 1
	(mg/l) 2	(mg/l) 2	
Copper (T)	0.29	0.16	0.0488
Lead (T)	0.53	0.26	0.113
Zinc (T)	0.98	0.37	0.195
Total phenols	0.86	0.3	0.15
Oil and grease	30	10	3.76
TSS	15	12	1.95
pH	(3)	(3)	(3)

1 kg/62.3 millions Sm^3 (pound per billion SCF) of air scrubbed.
2 Within the range of 7.0 to 10.0 at all times.
3 These concentrations must be multiplied by the ratio of (0.09/x) where x is the actual normalized process wastewater flow (in gallons per 1,000 SCF of air scrubbed) for a specific plant.

(2) Applicable to plants that are casting primarily steel and to plants that are casting primarily malleable iron where equal to or less than 3,557 tons of metal are poured per year.

NSPS

Pollutant or pollutant property	Maximum for any 1 day	Maximum for monthly average
	kg/62.3 million Sm^3 (pounds per billion SCF) of air scrubbed	
Copper (T)	0.218	0.12
Lead (T)	0.593	0.293
Zinc (T)	1.1	0.421
Total phenols	0.656	0.225
Oil and grease	22.5	7.51
TSS	28.5	11.3
pH	(1)	(1)

1 Within the range of 7.0 to 10.0 at all times.

	Maximum for any 1 day	Maximum for monthly average	Annual average 1
	(mg/l) 2	(mg/l) 2	
Copper (T)	0.29	0.16	0.0488
Lead (T)	0.79	0.39	0.165
Zinc (T)	1.47	0.56	0.3
Total phenols	0.86	0.3	0.15
Oil and grease	30	10	3.76
TSS	38	15	7.51
pH	(3)	(3)	(3)

1 kg/62.3 millions Sm^3 (pound per billion SCF) of air scrubbed.
2 Within the range of 7.0 to 10.0 at all times.
3 These concentrations must be multiplied by the ratio of (0.09/) where is the actual normalized process wastewater flow (in gallons per 1,000 SCF of air scrubbed) for a specific plant.

(d) *Grinding Scrubber Operations*. No discharge of process wastewater pollutants to navigable waters.

(e) *Investment Casting*. (1) Applicable to plants that are casting primarily ductile or gray iron and to plants that are casting primarily malleable iron where greater than 3,557 tons of metal are poured per year.

NSPS

Pollutant or pollutant property	Maximum for any 1 day	Maximum for monthly average
	kg/1,000 kkg (pounds per million pounds) of metal poured	
Copper (T)	3.19	1.76
Lead (T)	5.84	2.86
Zinc (T)	10.8	4.07
Oil and grease	330	110
TSS	165	132
pH	(1)	(1)

1 Within the range of 7.0 to 10.0 at all times.

	Maximum for any 1 day	Maximum for monthly average	Annual average 1
	(mg/l) 2	(mg/l) 2	
Copper (T)	0.29	0.16	0.716
Lead (T)	0.53	0.26	1.65
Zinc (T)	0.98	0.37	2.86
Oil and grease	30	10	55.1
TSS	15	12	28.6
pH	(3)	(3)	(3)

1 kg/1,000 kkg (pounds per million pounds) of metal poured.
2 These concentrations must be multiplied by the ratio of (1,320/x) where x is the actual normalized process wastewater flow (in gallons per 1,000 pounds of metal poured) for a specific plant.
3 Within the range of 7.0 to 10.0 at all times.

(2) Applicable to plants that are casting primarily steel and to plants that are casting primarily malleable iron where equal to or less than 3,557 tons of metal are poured per year.

NSPS

Pollutant or pollutant property	Maximum for any 1 day	Maximum for monthly average
	kg/1,000 kkg (pounds per million pounds) of metal poured	
Copper (T)	3.19	1.76
Lead (T)	8.7	4.3
Zinc (T)	16.2	6.17
Oil and grease	330	110
TSS	419	165
pH	(1)	(1)

1 Within the range of 7.0 to 10.0 at all times.

	Maximum for any 1 day	Maximum for monthly average	Annual average 1
	(mg/l) 2	(mg/l) 2	
Copper (T)	0.29	0.16	0.716
Lead (T)	0.79	0.39	2.42
Zinc (T)	1.47	0.56	4.41
Oil and grease	30	10	55.1
TSS	38	15	110
pH	(3)	(3)	(3)

1 kg/1,000 kkg (pounds per million pounds) of metal poured.
2 These concentrations must be multiplied by the ratio of (1,320/x) where x is the actual normalized process wastewater flow (in gallons per 1,000 pounds of metal poured) for a specific plant.
3 Within the range of 7.0 to 10.0 at all times.

(f) *Melting Furnace Scrubber Operations.* (1) Applicable to plants that are casting primarily ductile or gray iron and to plants that are casting primarily malleable iron where greater than 3,557 tons of metal are poured per year.

NSPS

Pollutant or pollutant property	Maximum for any 1 day	Maximum for monthly average
	kg/62.3 million Sm 3 (pounds per billion SCF) of air scrubbed	
Copper (T)	1.02	0.561
Lead (T)	1.86	0.911
Zinc (T)	3.44	1.30
Total phenols	3.01	1.05
Oil and grease	105	35
TSS	52.6	42.1
pH	(1)	(1)

1 Within the range of 7.0 to 10.0 at all times.

	Maximum for any 1 day	Maximum for monthly average	Annual average
	(mg/l) 2	(mg/l) 2	
Copper (T)	0.29	0.16	0.228
Lead (T)	0.53	0.26	0.526
Zinc (T)	0.98	0.37	0.911
Total phenols	0.86	0.3	0.701
Oil and grease	30	10	17.5
TSS	15	12	9.11
pH	(3)	(3)	(3)

1 kg/62.3 million Sm 3 (pounds per billion SCF) of air scrubbed.
2 These concentrations must be multiplied by the ratio of (0.42/x) where x is the actual normalized process wastewater flow (in gallons per 1,000 SCF of air scrubbed) for a specific plant.
3 Within the range of 7.0 to 10.0 at all times.

(2) Applicable to plants that are casting primarily steel and to plants that are casting primarily malleable iron where equal to or less than 3,557 tons of metal are poured per year.

NSPS

Pollutant or pollutant property	Maximum for any 1 day	Maximum for monthly average
	kg/62.3 million Sm 3 (pounds per billion SCF) of air scrubbed	
Copper (T)	1.02	0.561
Lead (T)	2.77	1.37
Zinc (T)	5.15	1.96
Total phenols	3.01	1.05
Oil and grease	105	35
TSS	133	52.6
pH	(1)	(1)

1 Within the range of 7.0 to 10.0 at all times.

	Maximum for any 1 day	Maximum for monthly average	Annual average
	(mg/l) 2	(mg/l) 2	
Copper (T)	0.29	0.16	0.228
Lead (T)	0.79	0.39	0.771
Zinc (T)	1.47	0.56	1.4
Total phenols	0.38	0.3	0.701
Oil and grease	30	10	17.5
TSS	38	15	35
pH	(3)	(3)	(3)

1 kg/62.3 million Sm 3 (pounds per billion SCF) of air scrubbed.
2 These concentrations must be multiplied by the ratio of (0.42/x) where x is the actual normalized process wastewater flow (in gallons per 1,000 SCF of air scrubbed) for a specific plant.
3 Within the range of 7.0 to 10.0 at all times.

(g) *Mold Cooling Operations.* (1) Applicable to plants that are casting primarily ductile or gray iron and to plants that are casting primarily malleable iron where greater than 3,557 tons of metal are poured per year.

NSPS

Pollutant or pollutant property	Maximum for any 1 day	Maximum for monthly average
	kg/1,000 kkg (pounds per million pounds) of metal poured	
Copper (T)	0.0428	0.0236
Lead (T)	0.0783	0.0384
Zinc (T)	0.0145	0.0546
Oil and grease	4.43	1.48
TSS	2.22	1.77
pH	(1)	(1)

1 Within the range of 7.0 to 10.0 at all times.

	Maximum for any 1 day	Maximum for monthly average	Annual average[1]
	(mg/l)[2]	(mg/l)[1]	
Copper (T)	0.29	0.16	0.0096
Lead (T)	0.53	0.26	0.0222
Zinc (T)	0.98	0.37	0.0384
Oil and grease	30	10	0.738
TSS	15	12	0.384
pH	(3)	(3)	(3)

1 kg/1,000 kkg (pounds per million) pounds of metal poured.
2 These concentrations must be multiplied by the ratio of (17.7/x) where x is the actual normalized process wastewater flow (in gallons per 1,000 pounds of metal poured) for a specific plant.
3 Within the range of 7.0 to 10.0 at all times.

(2) Applicable to plants that are casting primarily steel and to plants that are casting primarily malleable iron where equal to or less than 3,557 tons of metal are poured per year.

NSPS

Pollutant or pollutant property	Maximum for any 1 day	Maximum for monthly average
	kg/1,000 kkg (pounds per million pounds) of metal poured	
Copper (T)	0.0428	0.0236
Lead (T)	0.117	0.0576
Zinc (T)	0.217	0.0827
Oil and grease	4.43	1.48
TSS	5.61	2.22
pH	(1)	(1)

1 Within the range of 7.0 to 10.0 at all times.

	Maximum for any 1 day	Maxium for monthly average	Annual average[1]
	(mg/1)[2]	(mg/l)[2]	
Copper (T)	0.29	0.16	0.0096
Lead (T)	0.79	0.39	0.0325
Zinc (T)	1.47	0.56	0.0591
Oil and grease	30	10	0.738
TSS	38	15	1.48
pH	(3)	(3)	(3)

1 kg/1,000 kkg (pounds per million) pounds of metal poured.
2 These concentrations must be multiplied by the ratio of (17.7/x) where x is the actual normalized process wastewater flow (in gallons per 1,000 pounds of metal poured) for a specific plant.
3 Within the range of 7.0 to 10.0 at all times.

(h) *Slag Quench Operations.* (1) Applicable to plants that are casting primarily ductile or gray iron and to plants that are casting primarily malleable iron where greater than 3,557 tons of metal are poured per year.

NSPS

Pollutant or pollutant property	Maximum for any 1 day	Maximum for monthly average
	kg/1,000 kkg (pounds per million pounds) of metal poured	
Copper (T)	0.0527	0.0291
Lead (T)	0.0964	0.0473
Zinc (T)	0.178	0.0673
Oil and grease	5.46	1.82
TSS	2.73	2.18
pH	(1)	(1)

1 Within the range of 7.0 to 10.0 at all times.

	Maximum for any 1 day	Maximum for monthly average	Annual average[1]
	(mg/l)[2]	(mg/l)[2]	
Copper (T)	0.29	0.16	0.0118
Lead (T)	0.53	0.26	0.0273
Zinc (T)	0.98	0.37	0.0473
Oil and grease	30	10	0.909
TSS	15	12	0.473
pH	(3)	(3)	(3)

1 kg/1,000 kkg (pounds per million pounds) of metal poured.
2 These concentrations must be multiplied by the ratio of (21.8/x) where x is the actual normalized process wastewater flow (in gallons per 1,000 pounds of metal poured) for a specific plant.
3 Within the range of 7.0 to 10.0 at all times.

(2) Applicable to plants that are casting primarily steel and to plants that are casting primarily malleable iron where equal to or less than 3,557 tons of metal are poured per year.

NSPS

Pollutant or pollutant property	Maximum for any 1 day	Maximum for monthly average
	kg/1,000 kkg (pounds per million pounds) of metal poured	
Copper (T)	0.0527	0.0291
Lead (T)	0.144	0.0709
Zinc (T)	0.267	0.102
Oil and grease	5.46	1.82
TSS	6.91	2.73
pH	(1)	(1)

1 Within the range of 7.0 to 10.0 at all times.

	Maximum for any 1 day	Maximum for monthly average	Annual average
	(mg/l)[2]	(mg/1)[2]	
Copper (T)	0.29	0.16	0.0118
Lead (T)	0.79	0.39	0.04
Zinc (T)	1.47	0.56	0.0728
Oil and grease	30	10	0.909
TSS	38	15	1.82
pH	(3)	(3)	(3)

[1] kg/1000 kkg (pounds per million pounds) of metal poured.
[2] These concentrations must be multiplied by the ratio of (21.8/x) where x is the actual normalized process wastewater flow (in gallons per 1,000 pounds of metal poured) for a specific plant.
[3] Within the range of 7.0 to 10.0 at all times.

(i) *Wet Sand Reclamation Operations.* (1) Applicable to plants that are casting primarily ductile or gray iron and to plants that are casting primarily malleable iron where greater than 3,557 tons of metal are poured per year.

NSPS

Pollutant or pollutant property	Maximum for any 1 day	Maximum for monthly average
	kg/1,000 kkg (pounds per million pounds) of sand reclaimed	
Copper (T)	0.217	0.12
Lead (T)	0.396	0.194
Zinc (T)	0.732	0.276
Total phenols	0.642	0.224
Oil and grease	22.4	7.47
TSS	11.2	8.96
pH	(1)	(1)

[1] Within the range of 7.0 to 10.0 at all times.

	Maximum for any 1 day	Maximum for monthly average	Annual average[1]
	(mg/l)[2]	(mg/l)[2]	
Copper (T)	0.29	0.16	0.0485
Lead (T)	0.53	0.26	0.112
Zinc (T)	0.98	0.37	0.194
Total phenols	0.86	0.3	0.149
Oil and grease	30	10	3.73
TSS	15	12	1.94
pH	(3)	(3)	(3)

[1] kg/1,000 kkg (pounds per million pounds) of sand reclaimed.
[2] These concentrations must be multiplied by the ratio of (89.5/x) where x is the actual normalized process wastewater flow (in gallons per 1,000 pounds of sand reclaimed) for a specific plant.
[3] Within the range of 7.0 to 10.0 at all times.

(2) Applicable to plants that are casting primarily steel and to plants that are casting primarily malleable iron where equal to or less than 3,557 tons of metal are poured per year.

NSPS

Pollutant or pollutant property	Maximum for any 1 day	Maximum for monthly average
	kg/1,000 kkg (pounds per million pounds) of sand reclaimed	
Copper (T)	0.217	0.12
Lead (T)	0.59	0.291
Zinc (T)	1.1	0.418
Total phenols	0.642	0.224
Oil and grease	22.4	7.47
TSS	28.4	11.2
pH	(1)	(1)

[1] Within the range of 7.0 to at all times.

	Maximum for any 1 day	Maximum for monthly average	Annual average[1]
	(mg/l)[2]	(mg/l)[2]	
Copper (T)	0.29	0.16	0.0485
Lead (T)	0.79	0.39	0.164
Zinc (T)	1.47	0.56	0.299
Total phenols	0.86	0.3	0.149
Oil and grease	30	10	3.73
TSS	38	15	7.47
pH	(3)	(3)	(3)

[1] kg/1,000 kkg (pounds per million pounds) of sand reclaimed.
[2] These concentrations must be multiplied by the ratio of (89.5/x) where x is the actual normalized process wastewater flow (in gallons per 1,000 pounds of sand reclaimed) for a specific plant.
[3] Within the range of 7.0 to 10.0 at all times.

[50 FR 45247, Oct. 30, 1985; 51 FR 21761, June 16, 1986]

§ 464.35 Pretreatment standards for existing sources.

Except as provided in 40 CFR 403.7 and 403.13, any existing source subject to this subpart which introduces pollutants into a publicly owned treatment works must comply with 40 CFR part 403 and achieve the following pretreatment standards for existing sources.

(a) *Casting Cleaning Operations.* (1) Applicable to plants that are casting primarily ductile iron, to plants that are casting primarily malleable iron where greater than 3,557 tons of metal are poured per year, and to plants that are casting primarily gray iron where greater than 1,784 tons of metal are poured per year.

PSES

Pollutant or pollutant property	Maximum for any 1 day	Maximum for monthly average
	kg/1,000 kkg (pounds per million pounds) of metal poured	
Copper (T)	0.0129	0.0071
Lead (T)	0.0237	0.0116
Zinc (T)	0.0437	0.0165

(2) Applicable to plants that are casting primarily steel, to plants that are casting primarily malleable iron where equal to or less than 3,557 tons of metal are poured per year, and to plants that are casting primarily gray iron where equal to or less than 1,784 tons of metal are poured per year.

PSES

Pollutant or pollutant property	Maximum for any 1 day	Maximum for monthly average
	kg/1,000 kkg (pounds per million pounds) of metal poured	
Copper (T)	0.0129	0.0071
Lead (T)	0.0353	0.0174
Zinc (T)	0.0656	0.025

(b) *Casting Quench Operations.* (1) Applicable to plants that are casting primarily ductile iron, to plants that are casting primarily malleable iron where greater than 3,557 tons of metal are poured per year, and to plants that are casting primarily gray iron where greater than 1,784 tons of metal are poured per year.

PSES

Pollutant or pollutant property	Maximum for any 1 day	Maximum for monthly average
	kg/1,000 kkg (pounds per million pounds) of metal poured	
Copper (T)	0.0138	0.0076
Lead (T)	0.0252	0.0124
Zinc (T)	0.0466	0.0176
TTO	0.0257	0.00838
Oil and grease (for alternate monitoring)	1.43	0.476

(2) Applicable to plants that are casting primarily steel, to plants that are casting primarily malleable iron where equal to or less than 3,557 tons of metal are poured per year, and to plants that are casting primarily gray iron where equal to or less than 1,784 tons of metal are poured per year.

PSES

Pollutant or pollutant property	Maximum for any 1 day	Maximum for monthly average
	kg/1,000 kkg (pounds per million pounds) of metal poured	
Copper (T)	0.0138	0.0076
Lead (T)	0.0376	0.0185
Zinc (T)	0.0699	0.0266
TTO	0.0257	0.00838
Oil and grease (for alternate monitoring)	1.43	0.476

(c) *Dust Collection Scrubber Operations.* (1) Applicable to plants that are casting primarily ductile iron, to plants that are casting primarily malleable iron where greater than 3,557 tons of metal are poured per year, and to plants that are casting primarily gray iron where greater than 1,784 tons of metal are poured per year.

PSES

Pollutant or pollutant property	Maximum for any 1 day	Maximum for monthly average
	kg/62.3 million Sm^3 (pounds per billion SCF) of air scrubbed	
Copper (T)	0.218	0.12
Lead (T)	0.398	0.195
Zinc (T)	0.736	0.278
Total Phenols	0.646	0.225
TTO	2.04	0.664
Oil and Grease (for alternate monitoring)	22.5	7.51

(2) Applicable to plants that are casting primarily steel, to plants that are casting primarily malleable iron where equal to or less than 3,557 tons of metal are poured per year, and to plants that are casting primarily gray iron where equal to or less than 1,784 tons of metal are poured per year.

PSES

Pollutant or pollutant property	Maximum for any 1 day	Maximum for monthly average
	kg/62.3 million Sm^3 (pounds per billion SCF) of air scrubbed	
Copper (T)	0.218	0.12
Lead (T)	0.593	0.293
Zinc (T)	1.1	0.421
Total Phenols	0.656	0.225
TTO	2.04	0.664
Oil and Grease (for alternate monitoring)	22.5	7.51

(d) *Grinding Scrubber Operations*. No discharge of process wastewater pollutants to a POTW.

(e) *Investment Casting*. (1) Applicable to plants that are casting primarily ductile iron, to plants that are casting primarily malleable iron where greater than 3,557 tons of metal are poured per year, and to plants that are casting primarily gray iron where greater than 1,784 tons of metal are poured per year.

PSES

Pollutant or pollutant property	Maximum for any 1 day	Maximum for monthly average
	kg/1,000 kkg (pounds per million pounds) of metal poured	
Copper (T)	3.19	1.76
Lead (T)	5.84	2.86
Zinc (T)	10.8	4.07
TTO	13.2	4.3
Oil and Grease (for alternate monitoring)	330	110

(2) Applicable to plants that are casting primarily steel, to plants that are casting primarily malleable iron where equal to or less than 3,557 tons of metal are poured per year, and to plants that are casting primarily gray iron where equal to or less than 1,784 tons of metal are poured per year.

PSES

Pollutant or pollutant property	Maximum for any 1 day	Maximum for monthly average
	kg/1,000 kkg (pounds per million pounds) of metal poured	
Copper (T)	3.19	1.76
Lead (T)	8.7	4.3
Zinc (T)	16.2	6.17
TTO	13.2	4.3
Oil and Grease (for alternate monitoring)	330	110

(f) *Melting Furnace Scrubber Operations*. (1) Applicable to plants that are casting primarily ductile iron, to plants that are casting primarily malleable iron where greater than 3,557 tons of metal are poured per year, and to plants that are casting primarily gray iron where greater than 1,784 tons of metal are poured per year.

PSES

Pollutant or pollutant property	Maximum for any 1 day	Maximum for monthly average
	kg/62.3 million Sm^3 (pounds per billion SCF) of air scrubbed	
Copper (T)	1.02	0.561
Lead (T)	1.86	0.911
Zinc (T)	3.44	1.30
Total phenols	3.01	1.05
TTO	8.34	2.73
Oil and grease (for alternate monitoring)	105	35

(2) Applicable to plants that are casting primarily steel, to plants that are casting primarily malleable iron where equal to or less than 3,557 tons of metal are poured per year, and to plants that are casting primarily gray iron where equal to or less than 1,784 tons of metal are poured per year.

PSES

Pollutant or pollutant property	Maximum for any 1 day	Maximum for monthly average
	kg/62.3 million Sm^3 (pounds per billion SCF) of air scrubbed	
Copper (T)	1.02	0.561
Lead (T)	2.77	1.37
Zinc (T)	5.15	1.96
Total phenols	3.01	1.05
TTO	8.34	2.73
Oil and grease (for alternate monitoring)	105	35

(g) *Mold Cooling Operations.* (1) Applicable to plants that are casting primarily ductile iron, to plants that are casting primarily malleable iron where greater than 3,557 tons of metal are poured per year, and to plants that are casting primarily gray iron where greater than 1,784 tons of metal are poured per year.

PSES

Pollutant or pollutant property	Maximum for any 1 day	Maximum for monthly average
	kg/1,000 kkg (pounds per million pounds) of metal poured	
Copper (T)	0.0428	0.0236
Lead (T)	0.0783	0.0384
Zinc (T)	0.145	0.0546
TTO	0.0797	0.026
Oil and grease (for alternate monitoring)	4.43	1.48

(2) Applicable to plants that are casting primarily steel, to plants that are casting primarily malleable iron where greater than 3,557 tons of metal are poured per year, and to plants that are casting primarily gray iron where equal to or less than 1,784 tons of metal are poured per year.

PSES

Pollutant or pollutant property	Maximum for any 1 day	Maximum for monthly average
	kg/1,000 kkg (pounds per million pounds) of metal poured	
Copper (T)	0.0428	0.0236
Lead (T)	0.117	0.0576
Zinc (T)	0.217	0.0827
TTO	0.0797	0.026
Oil and grease (for alternate monitoring)	4.43	1.48

(h) *Slag Quench Operations.* (1) Applicable to plants that are casting primarily ductile iron, to plants that are casting primarily malleable iron where greater than 3,557 tons of metal are poured per year, and to plants that are casting primarily gray iron where greater than 1,784 tons of metal are poured per year.

PSES

Pollutant or pollutant property	Maximum for any 1 day	Maximum for monthly average
	kg/1,000 kkg (pounds per million pounds) of metal poured	
Copper (T)	0.0527	0.0291
Lead (T)	0.0964	0.0473
Zinc (T)	0.178	0.0673
TTO	0.0257	0.00838
Oil and grease (for alternate monitoring)	5.46	1.82

(2) Applicable to plants that are casting primarily steel, to plants that are casting primarily malleable iron where equal to or less than 3,557 tons of metal are poured per year, and to plants that are casting primarily gray iron where equal to or less than 1,784 tons of metal are poured per year.

PSES

Pollutant or pollutant property	Maximum for any 1 day	Maximum for monthly average
	kg/1,000 kkg (pounds per million pounds) of metal poured	
Copper (T)	0.0527	0.0291
Lead (T)	0.144	0.0709
Zinc (T)	0.267	0.102
TTO	0.0257	0.00838
Oil and grease (for alternate monitoring)	5.46	1.82

(i) *West Sand Reclamation Operations.* (1) Applicable to plants that are casting primarily ductile iron, to plants that are casting primarily malleable iron where greater than 3,557 tons of metal are poured per year, and to plants that are casting gray iron where greater than 1,784 tons of metal are poured per year.

PSES

Pollutant or pollutant property	Maximum for any 1 day	Maximum for monthly average
	kg/1,000 kkg (pounds per million pounds) of sand reclaimed	
Copper (T)	0.217	0.12
Lead (T)	0.396	0.194
Zinc (T)	0.732	0.276
Total Phenols	0.642	0.224
TTO	1.18	0.386
Oil and grease (for alternate monitoring)	22.4	7.47

(2) Applicable to plants that are casting primarily steel, to plants that are casting primarily malleable iron where equal to or less than 3,557 tons of metal are poured per year, and to plants that are casting primarily gray iron where equal to or less than 1,784 tons of metal are poured per year.

PSES

Pollutant or pollutant property	Maximum for any 1 day	Maximum for monthly average
	kg/1,000 kkg (pounds per million pounds) of sand reclaimed	
Copper (T)	0.217	0.12
Lead (T)	0.59	0.291
Zinc (T)	1.1	0.418
Total Phenols	0.642	0.224
TTO	1.18	0.386
Oil and grease (for alternate monitoring)	22.4	7.47

[50 FR 45247, Oct. 30, 1985; 51 FR 21762, June 16, 1986]

§ 464.36 Pretreatment standards for new sources.

Except as provided in 40 CFR 403.7, any new source subject to this subpart which introduces pollutants into publicly owned treatment works must comply with 40 CFR part 403 and achieve the following pretreatment standards for new sources.

(a) *Casting Cleaning Operations.* (1) Applicable to plants that are casting primarily ductile iron, to plants that are casting primarily malleable iron where greater than 3,557 tons of metal are poured per year, and to plants that are casting primarily gray iron where greater than 1,784 tons of metal are poured per year.

PSNS

Pollutant or pollutant property	Maximum for any 1 day	Maximum for monthly average
	kg/1,000 kkg (pounds per million pounds) of metal poured	
Copper (T)	0.0129	0.0071
Lead (T)	0.0237	0.0116
Zinc (T)	0.0437	0.0165

(2) Applicable to plants that are casting primarily steel, to plants that are casting primarily malleable iron where equal to or less than 3,557 tons of metal are poured per year, and to plants that are casting primarily gray iron where equal to or less than 1,784 tons of metal are poured per year.

PSNS

Pollutant or pollutant property	Maximum for any 1 day	Maximum for monthly average
	kg/1,000 kkg (pounds per million pounds) of metal poured	
Copper (T)	0.0129	0.0071
Lead (T)	0.0353	0.0174
Zinc (T)	0.0656	0.025

(b) *Casting Quench Operations.* (1) Applicable to plants that are casting primarily ductile iron, to plants that are casting primarily malleable iron where greater than 3,557 tons of metal are poured per year, and to plants that are casting primarily gray iron where greater than 1,784 tons of metal are poured per year.

PSNS

Pollutant or pollutant property	Maximum for any 1 day	Maximum for monthly average
	kg/1,000 kkg (pounds per million pounds) of metal poured	
Copper (T)	0.0138	0.0076
Lead (T)	0.0252	0.0124
Zinc (T)	0.0466	0.0176
TTO	0.0257	0.00838
Oil and Grease (for alternate monitoring)	1.43	0.476

(2) Applicable to plants that are casting primarily steel, to plants that are casting primarily malleable iron where equal to or less than 3,557 tons of metal are poured per year, and to plants that

are casting primarily gray iron where equal to or less than 1,784 tons of metal are poured per year.

PSNS

Pollutant or pollutant property	Maximum for any 1 day	Maximum for monthly average
	kg/1,000 kkg (pounds per million pounds) of metal poured	
Copper (T)	0.0138	0.0076
Lead (T)	0.0376	0.0185
Zinc (T)	0.0699	0.0266
TTO	0.0257	0.00838
Oil and Grease (for alternate monitoring)	1.43	0.476

(c) *Dust Collection Scrubber Operations.* (1) Applicable to plants that are casting primarily ductile iron, to plants that are casting primarily malleable iron where greater than 3,557 tons of metal are poured per year, and to plants that are casting primarily gray iron where greater than 1,784 tons of metal are poured per year.

PSNS

Pollutant or pollutant property	Maximum for any 1 day	Maximum for monthly average
	kg/62.3 million Sm^3 (pounds per billion SCF) of air scrubbed	
Copper (T)	0.218	0.12
Lead (T)	0.398	0.195
Zinc (T)	0.736	0.278
Total Phenols	0.646	0.225
TTO	2.04	0.664
Oil and Grease (for alternate monitoring)	22.5	7.51

(2) Applicable to plants that are casting primarily steel, to plants that are casting primarily malleable iron where equal to or less than 3,557 tons of metal are poured per year, and to plants that are casting primarily gray iron where equal to or less than 1,784 tons of metal are poured per year.

PSNS

Pollutant or pollutant property	Maximum for any 1 day	Maximum for monthly average
	kg/62.3 million Sm^3 (pounds per billion SCF) of air scrubbed	
Copper (T)	0.218	0.12
Lead (T)	0.593	0.293
Zinc (T)	1.1	0.421
Total Phenols	0.656	0.225
TTO	2.04	0.664
Oil and Grease (for alternate monitoring)	22.5	7.51

(d) *Grinding Scrubber Operations.* No discharge of process wastewater pollutants to a POTW.

(e) *Investment Casting.* (1) Applicable to plants that are casting primarily ductile iron, to plants that are casting primarily malleable iron where greater than 3,557 tons of metal are poured per year, and to plants that are casting primarily gray iron where greater than 1,784 tons of metal are poured per year.

PSNS

Pollutant or pollutant property	Maximum for any 1 day	Maximum for monthly average
	kg/1,000 kkg (pounds per million pounds) of metal poured	
Copper (T)	3.19	1.76
Lead (T)	5.84	2.86
Zinc (T)	10.8	4.07
TTO	13.2	4.3
Oil and Grease (for alternate monitoring)	330	110

(2) Applicable to plants that are casting primarily steel, to plants that are casting primarily malleable iron where equal to or less than 3,557 tons of metal are poured per year, and to plants that are casting primarily gray iron where equal to or less than 1,784 tons of metal are poured per year.

PSNS

Pollutant or pollutant property	Maximum for any 1 day	Maximum for monthly average
	kg/1,000 kkg (pounds per million pounds) of metal poured	
Copper (T)	3.19	1.76
Lead (T)	8.7	4.3
Zinc (T)	16.2	6.17
TTO	13.2	4.3
Oil and Grease (for alternate monitoring)	330	110

(f) *Melting Furnace Scrubber Operations*. (1) Applicable to plants that are casting primarily ductile iron, to plants that are casting primarily malleable iron where greater than 3,557 tons of metal are poured per year, and to plants that are casting primarily gray iron where greater than 1,784 tons of metal are poured per year.

PSNS

Pollutant or pollutant property	Maximum for any 1 day	Maximum for monthly average
	kg/62.3 million Sm^3 (pounds per billion SCF) of air scrubbed	
Copper (T)	1.02	0.561
Lead (T)	1.86	0.911
Zinc (T)	3.44	1.3
Total Phenols	3.01	1.05
TTO	8.34	2.73
Oil and Grease (for alternate monitoring)	105	35

(2) Applicable to plants that are casting primarily steel, to plants that are casting primarily malleable iron where equal to or less than 3,557 tons of metal are poured per year, and to plants that are casting primarily gray iron where equal to or less than 1,784 tons of metal are poured per year.

PSNS

Pollutant or pollutant property	Maximum for any 1 day	Maximum for monthly average
	kg/62.3 million Sm^3 (pounds per billion SCF) of air scrubbed	
Copper (T)	1.02	0.561
Lead (T)	2.77	1.37
Zinc (T)	5.15	1.96
Total Phenols	3.01	1.05
TTO	8.34	2.73
Oil and Grease (for alternate monitoring)	105	35

(g) *Mold Cooling Operations*. (1) Applicable to plants that are casting primarily ductile iron, to plants that are casting primarily malleable iron where greater than 3,557 tons of metal are poured per year, and to plants that are casting primarily gray iron where greater than 1,784 tons of metal are poured per year.

PSNS

Pollutant or pollutant property	Maximum for any 1 day	Maximum for monthly average
	kg/1,000 kkg (pounds per million pounds) of metal poured	
Copper (T)	0.0428	0.0236
Lead (T)	0.0783	0.0384
Zinc (T)	0.145	0.0546
TTO	0.0797	0.026
Oil and Grease (for alternate monitoring)	4.43	1.48

(2) Applicable to plants that are casting primarily steel, to plants that are casting primarily malleable iron where equal to or less than 3,557 tons of metal are poured per year, and to plants that are casting primarily gray iron where equal to or less than 1,784 tons of metal are poured per year.

PSNS

Pollutant or pollutant property	Maximum for any 1 day	Maximum for monthly average
	kg/1,000 kkg (pounds per million pounds) of metal poured	
Copper (T)	0.0428	0.0236
Lead (T)	0.117	0.0576
Zinc (T)	0.217	0.0827
TTO	0.0797	0.026
Oil and Grease (for alternate monitoring)	4.43	1.48

(h) *Slag Quench Operations*. (1) Applicable to plants that are casting primarily ductile iron, to plants that are casting primarily malleable iron where greater than 3,557 tons of metal are poured per year, and to plants that are casting primarily gray iron where greater than 1,784 tons of metal are poured per year.

PSNS

Pollutant or pollutant property	Maximum for any 1 day	Maximum for monthly average
	kg/1,000 kkg (pounds per million pounds) of metal poured	
Copper (T)	0.0527	0.0291
Lead (T)	0.0964	0.0473
Zinc (T)	0.178	0.0673
TTO	0.0257	0.00838
Oil and grease (for alternate monitoring)	5.46	1.82

(2) Applicable to plants that are casting primarily steel, to plants that are casting primarily malleable iron where equal to or less than 3,557 tons of metal are poured per year, and to plants that are casting primarily gray iron where equal to or less than 1,784 tons of metal are poured per year.

PSNS

Pollutant or pollutant property	Maximum for any 1 day	Maximum for monthly average
	kg/1,000 kkg (pounds per million pounds) of metal poured	
Copper (T)	0.0527	0.0291
Lead (T)	0.144	0.0709
Zinc (T)	0.267	0.102
TTO	0.0257	0.00838
Oil and grease (for alternate monitoring)	5.46	1.82

(i) *Wet Sand Reclamation Operations.* (1) Applicable to plants that are casting primarily ductile iron, to plants that are casting primarily malleable iron where greater than 3,557 tons of metal are poured per year, and to plants that are casting primarily gray iron where greater than 1,784 tons of metal are poured per year.

PSNS

Pollutant or pollutant property	Maximum for any 1 day	Maximum for monthly average
	kg/1,000 kkg (pounds per million pounds) of sand reclaimed	
Copper (T)	0.217	0.12
Lead (T)	0.396	0.194
Zinc (T)	0.732	0.276
Total phenols	0.642	0.224
TTO	1.18	0.386
Oil and grease (for alternate monitoring)	22.4	7.47

(2) Applicable to plants that are casting primarily steel, to plants that are casting primarily malleable iron where equal to or less than 3,557 tons of metal are poured per year, and to plants that are casting primarily gray iron where equal to or less than 1,784 tons of metal are poured per year.

PSNS

Pollutant or pollutant property	Maximum for any 1 day	Maximum for monthly average
	kg/1,000 kkg (pounds per million pounds) of sand reclaimed	
Copper (T)	0.217	0.12
Lead (T)	0.59	0.291
Zinc (T)	1.10	0.418
Total phenols	0.642	0.224
TTO	1.18	0.386
Oil and grease (for alternate monitoring)	22.4	7.47

§ 464.37 Effluent limitations guidelines representing the degree of effluent reduction attainable by the application of the best conventional pollutant control technology. [Reserved]

Subpart D—Zinc Casting Subcategory

§ 464.40 Applicability; description of the zinc casting subcategory.

The provisions of this subpart are applicable to discharges to waters of the United States and to the introduction of pollutants into publicly owned treatment works resulting from zinc casting operations as defined in § 464.02(d).

§ 464.41 Specialized definitions.

For the purpose of this subpart:

(a) *Total Toxic Organics* (TTO). TTO is a regulated parameter under PSES (§ 464.45) and PSNS (§ 464.46) for the zinc subcategory and is comprised of a discrete list of toxic organic pollutants for each process segment where it is regulated, as follows:

(1) Casting Quench (§ 464.45(a) and § 464.46(a)):

21. 2,4,6-trichlorophenol
22. para-chloro meta-cresol
31. 2,4-dichlorophenol
34. 2,4-dimethylphenol
39. fluoranthene
44. methylene chloride (dichloromethane)
65. phenol
66. bis(2-ethylhexyl) phthalate
68. di-n-butyl phthalate
70. diethyl phthalate
85. tetrachloroethylene

(2) Die Casting (§ 465.45(b) and § 464.46(b)):

1. acenaphthene
21. 2,4,6-trichlorophenol
22. para-chloro meta-cresol

24. 2-chlorophenol
34. 2,4-dimethylphenol
44. methylene chloride (dichloromethane)
55. naphthalene
65. phenol
66. bis (2-ethylhexyl) phthalate
68. di-n-butyl phthalate
70. diethyl phthalate
85. tetrachloroethylene
86. toluene
87. trichloroethylene

(3) Melting Furnace Scrubber (§ 464.45(c) and § 464.46(c)):

31. 2,4-dichlorophenol
34. 2,4-dimethylphenol
39. fluoranthene
44. methylene chloride (dichloromethane)
55. naphthalene
65. phenol
66. bis(2-ethylhexyl) phthalate
68. di-n-butyl phthalate
85. tetrachloroethylene
86. toluene
87. trichloroethylene

(4) Mold Cooling (§ 464.45(d) and § 464.46(d)):

21. 2,4,6-trichlorophenol
22. para-chloro meta-cresol
31. 2,4-dichlorophenol
34. 2,4-dimethylphenol
39. fluoranthene
44. methylene chloride (dichloromethane)
65. phenol
66. bis(2-ethylhexyl) phthalate
68. di-n-butyl phthalate
70. diethyl phthalate
85. tetrachloroethylene

[50 FR 45247, Oct. 30, 1985; 51 FR 21762, June 16, 1986]

§ 464.42 Effluent limitations guidelines representing the degree of effluent reduction attainable by the application of the best practicable control technology currently available.

Except as provided in 40 CFR 125.30 through 125.32, any existing point source subject to this subpart must achieve the following effluent limitations representing the degree of effluent reduction attainable by the application of the best practicable control technology currently available, except that non-continuous dischargers shall not be subject to the maximum day and maximum for monthly average mass (kg/1,000 kkg or lb/million lb of metal poured; kg/62.3 million Sm^3 or lb/billion SCF of air scrubbed) effluent limitations for copper, lead, zinc, total phenols, oil and grease, and TSS. For non-continuous dischargers, annual average mass limitations and maximum day and maximum for monthly average concentration (mg/1) limitations shall apply. Concentration limitations and annual average mass limitations shall only apply to noncontinuous dischargers.

(a) *Casting Quench Operations.*

BPT EFFLUENT LIMITATIONS

Pollutant or pollutant property	Maximum for any 1 day	Maximum for monthly average
	kg/1,000 kkg (pounds per million pounds) of metal poured	
Copper (T)	0.0344	0.0187
Lead (T)	0.0353	0.0174
Zinc (T)	0.0509	0.0192
Oil and grease	1.34	0.446
TSS	1.7	0.67
pH	(1)	(1)

1 Within the range of 7.0 to 10.0 at all times.

	Maximum for any 1 day	Maximum for monthly average	Annual average 1
	(mg/1) 2	(mg/1) 2	
Copper (T)	0.77	0.42	0.0076
Lead (T)	0.79	0.39	0.0098
Zinc (T)	1.14	0.43	0.0121
Oil and grease	30	10	0.223
TSS	38	15	0.446
pH	(3)	(3)	(3)

1 kg/1000 kkg (pound per million pounds) of metal poured.
2 These concentrations must be multiplied by the ratio of (5.35/x) where x is the actual normalized process wastewater flow (in gallons per 1,000 pounds of metal poured) for a specific plant.
3 Within the range of 7.0 to 10.0 at all times.

(b) *Die Casting Operations.*

BPT EFFLUENT LIMITATIONS

Pollutant or pollutant property	Maximum for any 1 day	Maximum for monthly average
	kg/1,000 kkg (pounds per million pounds) of metal poured	
Copper (T)	0.0066	0.0036
Lead (T)	0.0068	0.0034
Zinc (T)	0.0098	0.0037
Total phenols	0.0074	0.0026
Oil and grease	0.259	0.0864
TTS	0.328	0.13
pH	(1)	(1)

1 Within the range of 7.0 to 10.0 at all times.

	Maximum for any 1 day	Maximum for monthly average	Annual average 1
	(mg/l) 2	(mg/l) 2	

	Maximum for any 1 day	Maximum for monthly average	Annual average [1]
Copper (T)	0.77	0.42	0.0015
Lead (T)	0.79	0.39	0.0019
Zinc (T)	1.14	0.43	0.0023
Total phenols	0.86	0.3	0.0017
Oil and grease	30	10	0.0432
TSS	38	15	0.0864
pH	([3])	([3])	([3])

[1] kg/1000 kkg (pound per million pounds) of metal poured.
[2] These concentrations must be multiplied by the ratio of (1.04/x) where x is the actual normalized process wastewater flow (in gallons per 1,000 pounds of metal poured) for a specific plant.
[3] Within the range of 7.0 to 10.0 at all times.

(c) *Melting Furnace Scrubber Operations.*

BPT EFFLUENT LIMITATIONS

Pollutant or pollutant property	Maximum for any 1 day	Maximum for monthly average
	kg/62.3 millions Sm[3] (pounds per billion SCF) of air scrubbed	
Copper (T)	1.56	0.852
Lead (T)	1.6	0.791
Zinc (T)	2.31	0.872
Total Phenols	1.74	0.608
Oil and grease	60.8	20.3
TSS	77.1	30.4
pH	([1])	([1])

[1] Within the range of 7.0 to 10.0 at all times.

	Maximum for any 1 day	Maximum for monthly average	Annual average [1]
	(mg/l) [2]	(mg/l) [2]	
Copper (T)	0.77	0.42	0.345
Lead (T)	0.79	0.39	0.446
Zinc (T)	1.14	0.43	0.548
Total Phenols	0.86	0.3	0.406
Oil and grease	30	10	10.1
TSS	38	15	20.3
pH	([3])	([3])	([3])

[1] kg/62.3 million Sm[3] (pounds per billion SCF) of air scrubbed.
[2] These concentrations must be multiplied by the ratio of (0.243/x) where x is the actual normalized process wastewater flow (in gallons per 1,000 SCF of air scrubbed for a specific plant.
[3] Within the range of 7.0 to 10.0 at all times.

(d) *Mold Cooling Operations.*

BPT EFFLUENT LIMITATIONS

Pollutant or pollutant property	Maximum for any 1 day	Maximum for monthly average
	kg/1,000 kkg (pounds per million pounds) of metal poured	
Copper (T)	0.304	0.166
Lead (T)	0.311	0.154
Zinc (T)	0.449	0.17
Oil and grease	11.8	3.94
TSS	15	5.91
pH	([1])	([1])

[1] Within the range of 7.0 to 10.0 at all times.

	Maximum for any 1 day	Maximum for monthly average	Annual average [1]
	(mg/l) [2]	(mg/l) [2]	
Copper (T)	0.77	0.42	0.067
Lead (T)	0.79	0.39	0.0867
Zinc (T)	1.14	0.43	0.106
Oil and grease	30	10	1.97
TSS	38	15	3.94
pH	([3])	([3])	([3])

[1] kg/1,000 kkg (pounds per million pounds) of metal poured.
[2] These concentrations must be multiplied by the ratio of (47.3/x) where x is the actual normalized process wastewater flow (in gallons per 1,000 pounds of metal poured) for a specific plant.
[3] Within the range of 7.0 to 10.0 at all times.

[50 FR 45247, Oct. 30, 1985; 51 FR 21762, June 16, 1986]

§ 464.43 Effluent limitations guidelines representing the degree of effluent reduction attainable by the application of the best available technology economically achievable.

Except as provided in 40 CFR 125.30 through 125.32, any existing point source subject to this subpart must achieve the following effluent limitations representing the degree of effluent reduction attainable by the application of the best available technology economically achievable, except that non-continuous dischargers shall not be subject to the maximum day and maximum for monthly average mass (kg/1,000 kkg or lb/million lb of metal poured; kg/62.3 million Sm[3] or lb/billion SCF of air scrubbed) effluent limitations for copper, lead, zinc, and total phenols. For non-continuous dischargers, annual average mass limitations and maximum day and maximum for monthly average concentration

(mg/1) limitations shall apply. Concentration limitations and annual average mass limitations shall only apply to non-continuous dischargers.

(a) *Casting Quench Operations.*

BAT EFFLUENT LIMITATIONS

Pollutant or pollutant property	Maximum for any 1 day	Maximum for monthly average
	kg/1,000 kkg (pounds per million pounds) of metal poured	
Copper (T)	0.0344	0.0187
Lead (T)	0.0237	0.0116
Zinc (T)	0.0339	0.0129

	Maximum for any 1 day	Maximum for monthly average	Annual average [1]
	(mg/l) [2]	(mg/l) [2]	
Copper (T)	0.77	0.42	0.0076
Lead (T)	0.53	0.26	0.0067
Zinc (T)	0.76	0.29	0.008

[1] kg/1,000 kkg (pounds per million pounds) of metal poured.
[2] These concentrations must be multiplied by the ratio of (5.34/x) where x is the actual normalized process wastewater flow (in gallons per 1,000 pounds of metal poured) for a specific plant.

(b) *Die Casting Operations.*

BAT EFFLUENT LIMITATIONS

Pollutant or pollutant property	Maximum for any 1 day	Maximum for monthly average
	kg/1,000 kkg (pounds per million pounds) of metal poured	
Copper (T)	0.0066	0.0036
Lead (T)	0.0046	0.0022
Zinc (T)	0.0066	0.0025
Total phenols	0.0074	0.0026

	Maximum for any 1 day	Maximum for monthly average	Annual average [1]
	(mg/l) [2]	(mg/l) [2]	
Copper (T)	0.77	0.42	0.0015
Lead (T)	0.53	0.26	0.0013
Zinc (T)	0.76	0.29	0.0016
Total phenols	0.86	0.3	0.0017

[1] kg/1,000 kkg (pounds per million pounds) of metal poured.
[2] These concentrations must be multiplied by the ratio of (1.04/x) where x is the actual normalized process wastewater flow (in gallons per 1,000 pounds of metal poured) for a specific plant.

(c) *Melting Furnace Scrubber Operations.*

BAT EFFLUENT LIMITATIONS

Pollutant or pollutant property	Maximum for any 1 day	Maximum for monthly average
	kg/62.3 million Sm^3 (pounds per billion SCF) of air scrubbed	
Copper (T)	1.56	0.852
Lead (T)	1.07	0.527
Zinc (T)	1.54	0.588
Total phenolse	1.74	0.608

	Maximum for any 1 day	Maximum for monthly average	Annual average [1]
	(mg/l) [2]	(mg/l) [2]	
Copper (T)	0.77	0.42	0.345
Lead (T)	0.53	0.26	0.304
Zinc (T)	0.76	0.29	0.365
Total phenols	0.86	0.3	0.406

[1] kg/62.3 million Sm^3 (pounds per billion SCF) of air scrubbed.
[2] These concentrations must be multiplied by the ratio of (0.243/x) where x is the actual normalized process wastewater flow (in gallons per 1,000 pounds of metal poured) for a specific plant.

(d) *Mold Cooling Operations.*

BAT EFFLUENT LIMITATIONS

Pollutant or pollutant property	Maximum for any 1 day	Maximum for monthly average
	kg/1,000 kkg (pounds per million pounds) of metal poured	
Copper (T)	0.304	0.166
Lead (T)	0.209	0.103
Zinc (T)	0.3	0.114

	Maximum for any 1 day	Maximum for monthly average	Annual average[1]
	(mg/l)[2]	(mg/l)[2]	
Copper (T)	0.77	0.42	0.067
Lead (T)	0.53	0.26	0.0591
Zinc (T)	0.76	0.29	0.071

[1] kg/1,000 kkg (pounds per million pounds) of metal poured.
[2] These concentrations must be multiplied by the ratio of (47.3/x) where x is the actual normalized process wastewater flow (in gallons per 1,000 pounds of metal poured) for a specific plant.

[50 FR 45247, Oct. 30, 1985; 51 FR 21762, June 16, 1986]

§ 464.44 New source performance standards.

Any new source subject to this subpart must achieve the following new source performance standards (NSPS), except that non-continuous dischargers shall not be subject to the maximum day and maximum for monthly average

mass (kg/1,000 kkg or lb/million lb of metal poured; kg/62.3 million Sm^3 or lb/billion SCF of air scrubbed) effluent standards for copper, lead, zinc, total phenols, oil and grease, and TSS. For non-continuous dischargers, annual average mass standards and maximum day and maximum for monthly average concentration (mg/l) standards shall apply. Concentration standards and annual average mass standards shall only apply to non-continuous dischargers.

(a) *Casting Quench Operations.*

NSPS

Pollutant or pollutant property	Maximum for any 1 day	Maximum for monthly average
	kg/1,000 kkg (pounds per million pounds) of metal poured	
Copper (T)	0.0344	0.0187
Lead (T)	0.0237	0.0116
Zinc (T)	0.0339	0.0129
Oil and grease	1.34	0.446
TSS	0.67	0.536
pH	(1)	(1)

1 Within the range of 7.0 to 10.0 at all times.

	Maximum for any 1 day	Maximum for monthly average	Annual average 1
	(mg/l)2	(mg/l)2	
Copper (T)	0.77	0.42	0.0076
Lead (T)	0.53	0.26	0.0067
Zinc (T)	0.76	0.29	0.008
Oil and grease	30	10	0.223
TSS	15	12	0.116
pH	(3)	(3)	(3)

1 kg/1,000 kkg (pounds per million pounds) of metal poured.
2 These concentrations must be multiplied by the ratio of (5.34/x) where x is the actual normalized process wastewater flow (in gallons per 1,000 pounds of metal poured) for a specific plant.
3 Within the range of 7.0 to 10.0 at all times.

(b) *Die Casting Operations.*

NSPS

Pollutant or pollutant property	Maximum for any 1 day	Maximum for monthly average
	kg/1,000 kkg (pounds per million pounds) of metal poured	
Copper (T)	0.0066	0.0036
Lead (T)	0.0046	0.0022
Zinc (T)	0.0066	0.0025
Total phenols	0.0074	0.0026
Oil and grease	0.259	0.0864
TSS	0.13	0.104
pH	(1)	(1)

1 Within the range of 7.0 to 10.0 at all times.

	Maximum for any 1 day	Maximum for monthly average	Annual average 1
	(mg/l) 2	(mg/l) 2	
Copper (T)	0.77	0.42	0.0015
Lead (T)	0.53	0.26	0.0013
Zinc (T)	0.76	0.29	0.0016
Total phenols	0.86	0.3	0.0017
Oil and grease	30	10	0.0432
TSS	15	12	0.0225
pH	(3)	(3)	(3)

1 kg/1,000 kkg (pounds per million pounds) of metal poured.
2 These concentrations must be multiplied by the ratio of (1.04/x) where x is the actual normalized process wastewater flow (in gallons per 1,000 pounds of metal poured) for a specific plant.
3 Within the range of 7.0 to 10.0 at all times.

(c) *Melting Furnace Scrubber Operations.*

NSPS

Pollutant or pollutant property	Maximum for any 1 day	Maximum for monthly average
	kg/62.3 million Sm^3 (pounds per billion SCF) of air scrubbed	
Copper (T)	1.56	0.852
Lead (T)	1.07	0.527
Zinc (T)	1.54	0.588
Total phenols	1.74	0.608
Oil and grease	60.8	20.3
TSS	30.4	24.3
pH	(1)	(1)

1 Within the range of 7.0 to 10.0 at all times.

	Maximum for any 1 day	Maximum for monthly average	Annual average [1]
	(mg/l)[2]	(mg/l)[2]	
Copper (T)	0.77	0.42	0.345
Lead (T)	0.53	0.26	0.304
Zinc (T)	0.76	0.29	0.365
Total phenols	0.86	0.3	0.406
Oil and grease	30	10	10.1
TSS	15	12	5.27
pH	([3])	([3])	([3])

[1] kg/62.3 million Sm^3 (pounds per billion SCF) of air scrubbed.
[2] These concentrations must be multiplied by the ratio of (0.243/x) where x is the actual normalized process wastewater flow (in gallons per 1,000 SCF of air scrubbed) for a specific plant.
[3] Within the range of 7.0 to 10.0 at all times.

(d) *Mold Cooling Operations.*

NSPS

Pollutant or pollutant property	Maximum for any 1 day	Maximum for monthly average
	kg/1,000 kkg (pounds per million pounds) of metal poured	
Copper (T)	0.304	0.166
Lead (T)	0.209	0.103
Zinc (T)	0.3	0.114
Oil and grease	11.8	3.94
TSS	5.91	4.73
pH	([1])	([1])

[1] Within the range of 7.0 to 10.0 at all times.

	Maximum for any 1 day	Maximum for monthly average	Annual average [1]
	(mg/l)[2]	(mg/l)[2]	
Copper (T)	0.77	0.42	0.067
Lead (T)	0.53	0.26	0.0591
Zinc (T)	0.76	0.29	0.071
Oil and grease	30	10	1.97
TSS	15	12	1.03
pH	([3])	([3])	([3])

[1] kg/1,000 kkg (pounds per million pounds) of metal poured.
[2] These concentrations must be multiplied by the ratio of (47.3/x) where x is the actual normalized process wastewater flow (in gallons per 1,000 pounds of metal poured) for a specific plant.
[3] Within the range of 7.0 to 10.0 at all times.

[50 FR 45247, Oct. 30, 1985; 51 FR 21762, June 16, 1986]

§ 464.45 Pretreatment standards for existing sources.

Except as provided in 40 CFR 403.7 and 403.13, any existing source subject to this subpart which introduces pollutants into a publicly owned treatment works must comply with 40 CFR part 403 and achieve the following pretreatment standards for existing sources.

(a) *Casting Quench Operations.*

PSES

Pollutant or pollutant property	Maximum for any 1 day	Maximum for monthly average
	kg/1,000 kkg (pounds per million pounds) of metal poured	
Copper (T)	0.0344	0.0187
Lead (T)	0.0237	0.0116
Zinc (T)	0.0339	0.0129
TTO	0.093	0.0304
Oil and grease (for alternate monitoring)	1.34	0.446

(b) *Die Casting Operations.*

PSES

Pollutant or pollutant property	Maximum for any 1 day	Maximum for monthly average
	kg/1,000 kkg (pounds per million pounds of metal poured)	
Copper (T)	0.0066	0.0036
Lead (T)	0.0046	0.0022
Zinc (T)	0.0066	0.0025
Total phenols	0.0074	0.0026
TTO	0.0196	0.0064
Oil and grease for alternate monitoring)	0.259	0.0864

(c) *Melting Furnace Scrubber Operations.*

PSES

Pollutant or pollutant property	Maximum for any 1 day	Maximum for monthly average
	kg/62.3 million per billion Sm^3 (pounds SCF) of air scrubbed	
Copper (T)	1.56	0.852
Lead (T)	1.07	0.527
Zinc (T)	1.54	0.588
Total phenols	1.74	0.608
TTO	3.95	1.29
Oil and grease for alternate monitoring)	60.8	20.3

(d) *Mold Cooling Operations.*

PSES

Pollutant or pollutant property	Maximum for any 1 day	Maximum for monthly average
	kg/1,000 kkg (pounds per million pounds) of metal poured	
Copper (T)	0.304	0.166
Lead (T)	0.209	0.103
Zinc (T)	0.3	0.114
TTO	0.821	0.268
Oil and grease for alternate monitoring)	11.8	3.94

§ 464.46 Pretreatment standards for new sources.

Except as provided in 40 CFR 403.7, any new source subject to this subpart which introduces pollutants into publicly owned treatment works must comply with 40 CFR part 403 and achieve the following pretreatment standards for new sources.

(a) *Casting Quench Operations.*

PSNS

Pollutant or pollutant property	Maximum for any 1 day	Maximum for monthly average
	kg/1,000 kkg (pounds per million pounds) of metal poured	
Copper (T)	0.0344	0.0187
Lead (T)	0.0237	0.0116
Zinc (T)	0.0339	0.0129
TTO	0.093	0.0304
Oil and grease (for alternate monitoring)	1.34	0.446

(b) *Die Casting Operations.*

PSNS

Pollutant or pollutant property	Maximum for any 1 day	Maximum for monthly average
	kg/1,000 kkg (pounds per million pounds) of metal poured	
Copper (T)	0.0066	0.0036
Lead (T)	0.0046	0.0022
Zinc (T)	0.0066	0.0025
Total phenols	0.0074	0.0026
TTO	0.0196	0.0064
Oil and grease (for alternate monitoring)	0.259	0.0864

(c) *Melting Furnace Scrubber Operations.*

PSNS

Pollutant or pollutant property	Maximum for any 1 day	Maximum for monthly average
	kg/62.3 million per billion Sm^3 (pounds SCF) of air scrubbed	
Copper (T)	1.56	0.852
Lead (T)	1.07	0.527
Zinc (T)	1.54	0.588
Total phenols	1.74	0.608
TTO	3.95	1.29
Oil and grease (for alternate monitoring)	60.8	20.3

(d) *Mold Cooling Operations.*

PSNS

Pollutant or pollutant property	Maximum for any 1 day	Maximum for monthly average
	kg/1,000 kkg (pounds per million pounds) of metal poured	
Copper (T)	0.304	0.166
Lead (T)	0.209	0.103
Zinc (T)	0.3	0.114
TTO	0.821	0.268
Oil and grease (for alternate monitoring)	11.8	3.94

[50 FR 45247, Oct. 30, 1985; 51 FR 21762, June 16, 1986]

§ 464.47 Effluent limitations guidelines representing the degree of effluent reduction attainable by the application of the best conventional pollutant control technology. [Reserved]

PART 465—COIL COATING POINT SOURCE CATEGORY

GENERAL PROVISIONS

Sec.
465.01 Applicability.
465.02 General definitions.
465.03 Monitoring and reporting requirements.
465.04 Compliance date for PSES.

Subpart A—Steel Basis Material Subcategory

465.10 Applicability; description of the steel basis material subcategory.
465.11 Effluent limitations representing the degree of effluent reduction attainable by the application of the best practicable control technology currently available.
465.12 Effluent limitations representing the degree of effluent reduction attainable

by the application of the best available technology economically achievable.
465.13 New source performance standards.
465.14 Pretreatment standards for existing sources.
465.15 Pretreatment standards for new sources.

Subpart B—Galvanized Basis Material Subcategory

465.20 Applicability; description of the galvanized basis material subcategory.
465.21 Effluent limitations representing the degree of effluent reduction attainable by the application of the best practicable control technology currently available.
465.22 Effluent limitations representing the degree of effluent reduction attainable by the application of the best available technology economically achievable.
465.23 New source performance standards.
465.24 Pretreatment standards for existing sources.
465.25 Pretreatment standards for new sources.

Subpart C—Aluminum Basis Material Subcategory

465.30 Applicability; description of the aluminum basis material subcategory.
465.31 Effluent limitations representing the degree of effluent reduction attainable by the application of the best practicable control technology currently available.
465.32 Effluent limitations representing the degree of effluent reduction attainable by the application of the best available technology economically achievable.
465.33 New source performance standards.
465.34 Pretreatment standards for existing sources.
465.35 Pretreatment standards for new sources.

Subpart D—Canmaking Subcategory

465.40 Applicability; description of the canmaking subcategory.
465.41 Effluent limitations representing the degree of effluent reduction attainable by the application of the best practicable control technology currently available.
465.42 Effluent limitations representing the degree of effluent reduction attainable by the application of the best available technology economically achievable.
465.43 New source performance standards.
465.44 Pretreatment standards for existing sources.
465.45 Pretreatment standards for new sources.
465.46 Effluent limitations representing the degree of effluent reduction attainable by the application of the best conventional pollutant control technology. [Reserved]

AUTHORITY: Secs. 301, 304 (b), (c), (e), and (g), 306 (b) and (c), 307 (b) and (c), and 501 of the Clean Water Act (the Federal Water Pollution Control Act Amendments of 1972, as amended by the Clean Water Act of 1977) (the ''Act''); 33 U.S.C. 1311, 1314 (b), (c), (e), and (g), 1316 (b) and (c), 1317 (b) and (c), and 1361; 86 Stat. 816, Pub. L. 92–500; 91 Stat. 1567, Pub. L. 95–217.

SOURCE: 47 FR 54244, Dec. 1, 1982, unless otherwise noted.

GENERAL PROVISIONS

§ 465.01 Applicability.

This part applies to any coil coating facility or to any canmaking facility that discharges pollutants to waters of the United States or that introduces pollutants to a publicly owned treatment works.

[48 FR 52399, Nov. 17, 1983]

§ 465.02 General definitions.

In addition to the definitions set forth in 40 CFR part 401, the following definitions apply to this part:

(a) ''Coil'' means a strip of basis material rolled into a roll for handling.

(b) ''Coil coating '' means the process of converting basis material strip into coated stock. Usually cleaning, conversion coating, and painting are performed on the basis material. This regulation covers processes which perform any two or more of the three operations.

(c) ''Basis material'' means the coiled strip which is processed.

(d) ''Area processed'' means the area actually exposed to process solutions. Usually this includes both sides of the metal strip.

(e) ''Steel basis material'' means cold rolled steel, hot rolled steel, and chrome, nickel and tin coated steel which are processed in coil coating.

(f) ''Galvanized basis material'' means zinc coated steel, galvalum, brass and other copper base strip which is processed in coil coating.

(g) ''Aluminum basis material'' means aluminum, aluminum alloys and aluminum coated steels which are processed in coil coating.

(h) The term ''can'' means a container formed from sheet metal and

consisting of a body and two ends or a body and a top.

(i) The term ''canmaking'' means the manufacturing process or processes used to manufacture a can from a basic metal.

(j) The term ''Total Toxic Organics (TTO)'' shall mean the sum of the mass of each of the following toxic organic compounds which are found at a concentration greater than 0.010 mg/1.

1,1,1-Trichloroethane
1,1-Dichloroethane
1,1,2,2-Tetrachloroethane
Bis (2-chloroethyl) ether
Chloroform
1,1-Dichloroethylene
Methylene chloride (dichloromethane)
Pentachlorophenol
Bis (2-ethylhexyl) phthalate
Butyl benzyl-phthalate
Di-N-butyl phthalate
Phenanthrene
Tetrachloroethylene
Toluene

[47 FR 54244, Dec. 1, 1982, as amended at 48 FR 52399, Nov. 17, 1983]

§ 465.03 Monitoring and reporting requirements.

The following special monitoring requirements apply to all facilities controlled by this regulation.

(a) Periodic analyses for cyanide are not required when both of the following conditions are met:

(1) The first wastewater sample taken in each calendar year has been analyzed and found to contain less than 0.07 mg/l cyanide

(2) The owner or operator of the coil coating facility certifies in writing to the POTW authority or permit issuing authority that cyanide is not used in the coil coating process.

(b) The ''monthly average'' regulatory values shall be the basis for the monthly average discharge limits in direct discharge permits and for pretreatment standards. Compliance with the monthly discharge limit is required regardless of the number of samples analyzed and averaged.

(c) The following determination method shall be used for the determination of the concentration of oil and grease in wastewater samples from all subcategories of coil coating (Based on Standard Methods, 15th Edition, Methods 503A and 503E). In this method, a partition gravimetric procedure is used to determine hydrocarbon (petroleum based) oil and grease (O&G–E).

(1) *Apparatus.* (i) Separatory funnel, 1 liter, with TFE[1] stopcock.

(ii) Glass stoppered flask, 125 ml.

(iii) Distilling flask, 125 ml.

(iv) Water bath.

(v) Filter paper, 11 cm diameter.[2]

(vi) Glass funnel.

(vii) Magnetic stirrer and Teflon coated stir bar.

(2) *Reagents.* (i) Hydrochloric acid, HCl, 1+1.

(ii) Trichlorotrifluoroethane.[3] (1,1,2-trichloro-1,2,2-trifluoroethane), boiling point 47 °C. The solvent should leave no measurable residue on evaporation; distill if necessary. Do not use any plastic tubing to transfer solvent between containers.

(iii) Sodium sulfate, Na_2 SO_4, anhydrous crystal.

(iv) Silica gel, 60 to 200 mesh.[4] Dry at 110 °C for 24 hours and store in a tightly sealed container.

(3) *Procedure.* To determine hydrocarbon oil and grease, collect about 1 liter of sample and mark sample level in bottle for later determination of sample volume. Acidify to pH 2 or lower; generally, 5 ml HCl is sufficient. Transfer to a separatory funnel. Carefully rinse sample bottle with 30 ml trichlorotrifluoroethane and add solvent washings to separatory funnel. Preferably shake vigorously for 2 minutes. However, if it is suspected that a stable emulsion will form, shake gently for 5 to 10 minutes. Let layers separate. Drain solvent layer through a funnel containing solvent-moistened filter paper into a tared clean flask. If a clear solvent layer cannot be obtained, add 1g Na_2 SO_4 to the filter paper cone and slowly drain emulsified solvent onto the crystals. Add more Na_2 SO_4 if necessary. Extract twice more with 30 ml solvent each but first rinse sample container with each solvent portion. Combine extracts in tared flask and wash filter with an additional 10 to 20 ml. solvent. Add 3.0 g silica gel. Stopper flask and stir on a magnetic stirrer for 5 minutes. Filter

[1] Teflon® or equivalent.
[2] Whatman No. 40 or equivalent.
[3] Freon or equivalent.
[4] Davidson Grade 950 or equivalent.

solution through filter paper and wash silica gel and filter paper with 10 ml solvent and combine with filtrate in tared distilling flask. Distill solvent from distilling flask in a water bath at 70 °C. Place flask on a water bath at 70 °C for 15 minutes and draw air through it with an applied vacuum for the final 1 minute. Cool in a desiccator for 30 minutes and weigh.

(4) *Calculations—calculation of O&G-E.* If the organic solvent is free of residue the gain in weight of the tared distilling flask is due to hydrocarbon oil and grease. Total gain in weight, E, is the amount of hydrocarbon oil and grease in the sample (mg):

$$\text{mg (hydrocarbon oil and grease)} / 1 = \frac{E \times 1000}{\text{ml/sample}}$$

(5) *Use of O&G-E.* The value, O&G-E shall be used as the measure of compliance with the oil and grease limitations and standards set forth in this regulation.

(d) The owner or operator of any canmaking facility subject to the provisions of this regulation shall advise the permit issuing authority or POTW authority and the EPA Office of Water Regulations and Standards, Washington, DC 20460 whenever it has been decided that the plant will manufacture cans from an aluminum alloy containing less than 1.0 percent manganese. Such notification shall be made in writing, not less than 30 days in advance of the scheduled production and shall provide the chemical analysis of the alloy and the expected period of use.

(Approved by the Office of Management and Budget under control number 2040–0033)

[47 FR 54244, Dec. 1, 1982, as amended at 48 FR 52399, Nov. 17, 1983; 49 FR 14104, Apr. 10, 1984; 50 FR 4515, Jan. 31, 1985]

§ 465.04 Compliance date for PSES.

(a) For subparts A, B, and C the compliance date for Pretreatment Standards for Existing Source (PSES) is December 1, 1985.

(b) For subpart D, the compliance date for Pretreatment Standards for Existing Sources will be as soon as possible, but in no case later than November 17, 1986.

[48 FR 52399, Nov. 17, 1983]

Subpart A—Steel Basis Material Subcategory

§ 465.10 Applicability; description of the steel basis material subcategory.

This subpart applies to discharges to waters of the United States, and introductions of pollutants into publicly owned treatment works from coil coating of steel basis material coils.

§ 465.11 Effluent limitations representing the degree of effluent reduction attainable by the application of the best practicable control technology currently available.

Except as provided in 40 CFR 125.30 through 125.32, any existing point source subject to this subpart must achieve the following effluent limitations representing the degree of effluent reduction attainable by the application of the best practicable control technology currently available:

SUBPART A

Pollutant or pollutant property	BPT effluent limitations			
	Maximum for any 1 day		Maximum for monthly average	
	mg/m² (pounds per 1 million ft²) of area processed			
Chromium	1.16	(0.24)	0.47	(0.096)
Cyanide	0.80	(0.17)	0.33	(0.068)
Zinc	3.66	(0.75)	1.54	(0.32)
Iron	3.39	(0.70)	1.74	(0.36)
Oil and grease	55.1	(11.3)	33.1	(6.77)
TSS	113.0	(23.1)	55.1	(11.3)
pH	(1)	(1)	(1)	(1)

[1] Within the range of 7.5 to 10.0 at all times.

[47 FR 54244, Dec. 1, 1982; 49 FR 33648, Aug. 24, 1984]

§ 465.12 Effluent limitations representing the degree of effluent reduction attainable by the application of the best available technology economically achievable.

Except as provided in 40 CFR 125.30 through 125.32, any existing point source subject to this subpart must

achieve the following effluent limitations representing the degree of effluent reduction attainable by the application of the best available technology economically achievable:

SUBPART A

Pollutant or pollutant property	BAT effluent limitations			
	Maximum for any 1 day		Maximum for monthly average	
	mg/m² (pounds per 1 million ft²) of area processed			
Chromium	0.50	(0.10)	0.20	(0.041)
Cyanide	0.34	(0.07)	0.14	(0.029)
Zinc	1.56	(0.32)	0.66	(0.14)
Iron	1.45	(0.30)	0.74	(0.15)

[47 FR 54244, Dec. 1, 1982; 49 FR 33648, Aug. 24, 1984]

§ 465.13 New source performance standards.

The following standards of performance establish the quantity or quality of pollutants or pollutant properties, controlled by this section, which may be discharged by a new source subject to the provisions of this subpart:

SUBPART A

Pollutant or pollutant property	NSPS			
	Maximum for any 1 day		Maximum for monthly average	
	mg/m² (pounds per 1 million ft²) of area processed			
Chromium	0.12	(0.024)	0.047	(0.01)
Cyanide	0.063	(0.013)	0.025	(0.005)
Zinc	0.33	(0.066)	0.14	(0.027)
Iron	0.39	(0.086)	0.20	(0.041)
Oil and grease	3.16	(0.65)	3.16	(0.65)
TSS	4.74	(0.97)	3.79	(0.78)
pH	(1)	(1)	(1)	(1)

[1] Within the range of 7.5 to 10.0 at all times.

[47 FR 54244, Dec. 1, 1982; 49 FR 33648, Aug. 24, 1984]

§ 465.14 Pretreatment standards for existing sources.

Except as provided in 40 CFR 403.7 and 403.13, any existing source subject to this subpart which introduces pollutants into a publicly owned treatment works must comply with 40 CFR part 403 and achieve the following retreatment standards for existing sources. The mass of wastewater pollutants in coil coating process wastewater introduced into a POTW shall not exceed the following values:

SUBPART A

Pollutant or pollutant property	PSES			
	Maximum for any 1 day		Maximum for monthly average	
	mg/m² (pound per 1 million ft²) of area processed			
Chromium	0.50	(0.10)	0.20	(0.041)
Cyanide	0.34	(0.07)	0.14	(0.029)
Zinc	1.56	(0.32)	0.66	(0.14)

[47 FR 54244, Dec. 1, 1982; 49 FR 33648, Aug. 24, 1984]

§ 465.15 Pretreatment standards for new sources.

Except as provided in CFR 403.7, any new source subject to this subpart which introduces pollutants into a publicly owned treatment works must comply with 40 CFR part 403 and achieve the following pretreatment standards for new sources. The mass of wastewater pollutants in coil coating process wastewater introduced into a POTW shall not exceed the following values:

SUBPART A

Pollutant or pollutant property	PSNS			
	Maximum for any 1 day		Maximum for monthly average	
	mg/m² (pounds per 1 million ft²) of area processed			
Chromium	0.12	(0.024)	0.047	(0.01)
Cyanide	0.063	(0.013)	0.025	(0.005)
Zinc	0.33	(0.066)	0.14	(0.027)

[47 FR 54244, Dec. 1, 1982; 49 FR 33648, Aug. 24, 1984]

Subpart B—Galvanized Basis Material Subcategory

§ 465.20 Applicability; description of the galvanized basis material subcategory.

This subpart applies to discharges to waters of the United States and introductions of pollutants into publicly

owned treatment works from coil coating of galvanized basis material coils.

§ 465.21 Effluent limitations representing the degree of effluent reduction attainable by the application of the best practicable control technology currently available.

Except as provided in 40 CFR 125.30 through 125.32, any existing point source subject to this subpart must achieve the following effluent limitations representing the degree of effluent reduction attainable by the application of the best practicable control technology currently available:

SUBPART B

Pollutant or pollutant property	BPT effluent limitations			
	Maximum for any 1 day		Maximum for monthly average	
	mg/m² (pounds per 1 million ft²) of area processed			
Chromium	1.10	(0.23)	0.45	(0.091)
Copper	4.96	(1.02)	2.61	(0.54)
Cyanide	0.76	(0.16)	0.32	(0.064)
Zinc	3.47	(0.71)	1.46	(0.30)
Iron	3.21	(0.66)	1.65	(0.34)
Oil and grease	52.2	(10.7)	31.3	(6.42)
TSS	107.0	(21.9)	52.2	(10.7)
pH	(1)	(1)	(1)	(1)

[1] Within the range of 7.5 to 10.0 at all times.

[47 FR 54244, Dec. 1, 1982; 49 FR 33648, Aug. 24, 1984]

§ 465.22 Effluent limitations representing the degree of effluent reduction attainable by the application of the best available technology economically achievable.

Except as provided in 40 CFR 125.30 through 125.32, any existing point source subject to this subpart must achieve the following effluent limitations representing the degree of effluent reduction attainable by the application of the best available technology economically achievable:

SUBPART B

Pollutant or pollutant property	BAT effluent limitations			
	Maximum for any 1 day		Maximum for monthly average	
	mg/m² (pounds per 1 million ft²) of area processed			
Chromium	0.37	(0.077)	0.16	(0.031)
Copper	1.71	(0.35)	0.90	(0.19)
Cyanide	0.26	(0.053)	0.11	(0.022)
Zinc	1.20	(0.25)	0.51	(0.11)
Iron	1.10	(0.23)	0.57	(0.12)

[47 FR 54244, Dec. 1, 1982; 49 FR 33648, Aug. 24, 1984]

§ 465.23 New source performance standards.

The following standards of performance establish the quantity or quality of pollutants or pollutant properties, controlled by this section which may be discharged by a new source subject to the provisions of this subpart:

SUBPART B

Pollutant or pollutant property	NSPS			
	Maximum for any 1 day		Maximum for monthly average	
	mg/m² (pounds per 1 million ft²) of area processed			
Chromium	0.13	(0.027)	0.052	(0.011)
Copper	0.44	(0.090)	0.21	(0.043)
Cyanide	0.07	(0.015)	0.028	(0.006)
Zinc	0.35	(0.08)	0.15	(0.030)
Iron	0.43	(0.09)	0.22	(0.045)
Oil and grease	3.43	(0.71)	3.43	(0.702)
TSS	5.15	(1.06)	4.12	(0.84)
pH	(1)	(1)	(1)	(1)

[1] Within the range of 7.5 to 10.0 at all times.

[47 FR 54244, Dec. 1, 1982; 49 FR 33648, Aug. 24, 1984]

§ 465.24 Pretreatment standards for existing sources.

Except as provided in 40 CFR 403.7 and 403.13, any existing source subject to this subpart which introduces pollutants into a publicly owned treatment works must comply with 40 CFR part 403 and achieve the following pretreatment standards for existing sources. The mass of wastewater pollutants in coil coating process wastewater introduced into a POTW shall not exceed the following values:

SUBPART B

Pollutant or pollutant property	PSES			
	Maximum for any 1 day		Maximum for monthly average	
	mg/m² (pounds per 1 million ft²) of area processed			
Chromium	0.37	(0.077)	0.16	(0.031)
Copper	1.71	(0.35)	0.90	(0.19)
Cyanide	0.26	(0.053)	0.11	(0.022)
Zinc	1.20	(0.25)	0.51	(0.11)

[47 FR 54244, Dec. 1, 1982; 49 FR 33648, Aug. 24, 1984]

§ 465.25 Pretreatment standards for new sources.

Except as provided in 40 CFR 403.7, any new source subject to this subpart which introduces pollutants into a publicly owned treatment works must comply with 40 CFR part 403 and achieve the following pretreatment standards for new sources. The mass of wastewater pollutants in coil coating process wastewater introduced into a POTW shall not exceed the following values.

SUBPART B

Pollutant or pollutant property	PSNS			
	Maximum for any 1 day		Maximum for monthly average	
	mg/m² (pounds per 1 million ft²) of area processed			
Chromium	0.13	(0.027)	0.052	(0.011)
Copper	0.44	(0.090)	0.21	(0.043)
Cyanide	0.07	(0.015)	0.028	(0.006)
Zinc	0.35	(0.072)	0.15	(0.030)

[47 FR 54244, Dec. 1, 1982; 49 FR 33649, Aug. 24, 1984]

Subpart C—Aluminum Basis Material Subcategory

§ 465.30 Applicability; description of the aluminum basis material subcategory.

This subpart applies to discharges to waters of the United States and introductions of pollutants into publicly owned treatment works from coil coating of aluminum basis material coils.

§ 465.31 Effluent limitations representing the degree of effluent reduction attainable by the application of the best practicable control technology currently available.

Except as provided in 40 CFR 125.30 through 125.32, any existing point source subject to this subpart must achieve the following effluent limitations representing the degree of effluent reduction attainable by the application of the best practicable control technology currently available:

SUBPART C

Pollutant or pollutant property	BPT Effluent limitations			
	Maximum for any 1 day		Maximum for monthly average	
	mg/m² (pounds per 1 million ft²) of area processed			
Chromium	1.42	(0.29)	0.58	(0.12)
Cyanide	0.98	(0.20)	0.41	(0.083)
Zinc	4.48	(0.92)	1.89	(0.39)
Aluminum	15.3	(3.14)	6.26.	(1.28)
Oil and grease	67.3	(13.8)	40.4	(8.27)
TSS	138.0	(28.3)	67.3	(13.8)
pH	(1)	(1)	(1)	(1)

[1] Within the range of 7.5 to 10.0 at all times.

[47 FR 54244, Dec. 1, 1982; 49 FR 33649, Aug. 24, 1984]

§ 465.32 Effluent limitations representing the degree of effluent reduction attainable by the application of the best available technology economically achievable.

Except as provided in 40 CFR 125.30 through 125.32, any existing point source subject to this subpart must achieve the following effluent limitations representing the degree of effluent reduction attainable by the application of the best available technology economically achievable:

SUBPART C

Pollutant or pollutant property	BAT Effluent limitations			
	Maximum for any 1 day		Maximum for monthly average	
	mg/m² (pounds per 1 million ft²) of area processed			
Chromium	0.42	(0.085)	0.17	(0.034)
Cyanide	0.29	(0.059)	0.12	(0.024)
Zinc	1.32	(0.27)	0.56	(0.12)
Aluminum	4.49	(0.92)	1.84.	(0.38)

[47 FR 54244, Dec. 1, 1982; 49 FR 33649, Aug. 24, 1984]

§ 465.33 New source performance standards.

The following standards of performance establish the quantity or quality of pollutants or pollutant properties, controlled by this section, which may be discharged by a new source subject to the provisions of this subpart.

SUBPART C

Pollutant or pollutant property	NSPS			
	Maximum for any 1 day		Maximum for monthly average	
	mg/m² (pounds per 1 million ft²) of area processed			
Chromium	0.18	(0.037)	0.072	(0.015)
Cyanide	0.095	(0.020)	0.038	(0.008)
Zinc	0.49	(0.10)	0.20	(0.041)
Aluminum	1.44	(0.30)	0.59	(0.121)
Oil and Grease	4.75	(0.98)	4.75	(0.98)
TSS	7.13	(1.46)	5.70	(1.17)
pH	(1)	(1)	(1)	(1)

[1] Within the range of 7.5 to 10.0 at all times.

[47 FR 54244, Dec. 1, 1982; 49 FR 33649, Aug. 24, 1984]

§ 465.34 Pretreatment standards for existing sources.

Except as provided in 40 CFR 403.7 and 403.13, any existing source subject to this subpart which introduces pollutants into a publicly owned treatment works must comply with 40 CFR part 403 and achieve the following pretreatment standards for existing sources. The mass of wastewater pollutants in coil coating process wastewater introduced into a POTW shall not exceed the following values:

SUBPART C

Pollutant or pollutant property	PSES			
	Maximum for any 1 day		Maximum for monthly average	
	mg/m² (pounds per 1 million ft²) of area processed			
Chromium	0.42	(0.085)	0.17	(0.034)
Cyanide	0.29	(0.059)	0.12	(0.024)
Zinc	1.32	(0.27)	0.56	(0.12)

[47 FR 54244, Dec. 1, 1982; 49 FR 33649, Aug. 24, 1984]

§ 465.35 Pretreatment standards for new sources.

Except as provided in 40 CFR 403.7, any new source subject to this subpart which introduces pollutants into a publicly owned treatment works must comply with 40 CFR part 403 and achieve the following pretreatment standards for new sources. The mass of wastewater pollutants in coil coating process wastewater introduced into a POTW shall not exceed the following values:

SUBPART C

Pollutant or pollutant property	PSNS			
	Maximum for any 1 day		Maximum for monthly average	
	mg/m² (pounds per 1 million ft²) of area processed			
Chromium	0.18	(0.037)	0.072	(0.015)
Cyanide	0.095	(0.02)	0.038	(0.008)
Zinc	0.49	(0.10)	0.20	(0.041)

[47 FR 54244, Dec. 1, 1982; 49 FR 33649, Aug. 24, 1984]

Subpart D—Canmaking Subcategory

SOURCE: 48 FR 52399, Nov. 17, 1983, unless otherwise noted.

§ 465.40 Applicability; description of the canmaking subcategory.

This subpart applies to discharges to waters of the United States, and introductions of pollutants into publicly owned treatment works from the manufacturing of seamless can bodies, which are washed.

§ 465.41 Effluent limitations representing the degree of effluent reduction attainable by the application of the best practicable control technology currently available.

Except as provided in 40 CFR 125.30 through 125.32, any existing point source subject to this subpart must achieve the following effluent limitations representing the degree of effluent reduction attainable by the application of the best practicable control technology currently available:

SUBPART D—BPT EFFLUENT LIMITATIONS

Pollutant or pollutant property	Maximum for any 1 day		Maximum for monthly average	
	g (lbs)/1,000,000 cans manufactured			
Cr	94.60	(0.209)	38.70	(0.085)
Zn	313.90	(0.692)	131.15	(0.289)
Al	1382.45	(3.048)	688.00	(1.517)
F	12792.50	(28.203)	5676.00	(12.514)
P	3590.50	(7.916)	1468.45	(3.237)
O & G	4300.00	(9.480)	2580.00	(5.688)
TSS	8815.00	(19.434)	4192.50	(9.243)
pH		(1)		(1)

[1]Within the range of 7.0 to 10 at all times.

[48 FR 52399, Nov. 17, 1983; 49 FR 14105, Apr. 10, 1984]

§ 465.42 Effluent limitations representing the degree of effluent reduction attainable by the application of the best available technology economically achievable.

Except as provided in 40 CFR 125.30 through 125.32, any existing point source subject to this subpart must achieve the following effluent limitations representing the degree of effluent reduction attainable by the application of the best available technology economically achievable:

SUBPART D—BAT EFFLUENT LIMITATIONS

Pollutant or pollutant property	Maximum for any 1 day		Maximum for monthly average	
	g (lbs)/1,000,000 cans manufactured			
Cr	36.92	(0.081)	15.10	(0.033)
Zn	122.49	(0.270)	51.18	(0.113)
Al	539.48	(1.189)	268.48	(0.592)
F	4992.05	(11.001)	2214.96	(4.883)
P	1401.13	(3.089)	573.04	(1.263)

§ 465.43 New source performance standards.

The following standards of performance establish the quantity of pollutants or pollutant properties, controlled by this section, which may be discharged by a new source subject to the provisions of this subpart:

SUBPART D—NSPS

Pollutant or pollutant property	Maximum for any 1 day		Maximum for monthly average	
	g (lbs)/1,000,000 cans manufactured			
Cr	27.98	(0.062)	11.45	(0.025)
Zn	92.86	(0.205)	38.80	(0.086)
Al	408.95	(0.902)	203.52	(0.449)
F	3784.20	(8.343)	1679.04	(3.702)
P	1062.12	(2.342)	434.39	(0.958)
O & G	1272.00	(2.804)	763.20	(1.683)
TSS	2607.60	(5.749)	1240.20	(2.734)
pH		(1)		(1)

[1]Within the range of 7.0 to 10 at all times.

[48 FR 52399, Nov. 17, 1983; 49 FR 14105, Apr. 10, 1984]

§ 465.44 Pretreatment standards for existing sources.

Except as provided in 40 CFR 403.7 and 403.13, any existing source subject to this subpart which introduces pollutants into a publicly owned treatment works must comply with 40 CFR part 403 and achieve the following pretreatment standards for exisitng sources.

SUBPART D—PSES

Pollutant or pollutant property	Maximum for any 1 day		Maximum for monthly average	
	g (lbs)/1,000,000 cans manufactured			
Cr	36.92	(0.081)	15.10	(0.033)
Cu	159.41	(0.351)	83.90	(0.185)
Zn	122.49	(0.270)	51.18	(0.113)
F	4992.05	(11.001)	2214.96	(4.883)
P	1401.13	(3.089)	573.04	(1.263)
Mn	57.05	(0.126)	24.33	(0.053)
TTO	26.85	(0.059)	12.59	(0.028)
O&G (for alternate monitoring)	1678.00	(3.699)	1006.80	(2.220)

[48 FR 52399, Nov. 17, 1983; 49 FR 14105, Apr. 10, 1984]

§ 465.45 Pretreatment standards for new sources.

Except as provided in 40 CFR 403.7 any new source subject to this subpart which introduces pollutants into a publicly owned treatment works must comply with 40 CFR part 403 and achieve the following pretreatment standards for new sources.

SUBPART D—PSNS

Pollutant or pollutant property	Maximum for any 1 day	Maximum for monthly average
	g (lbs)/1,000,000 cans manufactured	
Cr	27.98 (0.0617)	11.45 (0.025)
Cu	120.84 (0.267)	63.60 (0.140)
Zn	92.86 (0.205)	38.80 (0.086)
F	3784.20 (8.345)	1679.04 (3.702)
P	1062.12 (2.342)	434.39 (0.958)
Mn	43.25 (0.095)	18.44 (0.041)
TTO	20.35 (0.045)	9.54 (0.0210)
O&G (for alternate monitoring)	1272.00 (2.804)	763.20 (1.683)

[48 FR 52399, Nov. 17, 1983; 49 FR 14105, Apr. 10, 1984]

§ 465.46 Effluent limitations representing the degree of effluent reduction attainable by the application of the best conventional pollutant control technology. [Reserved]

PART 466—PORCELAIN ENAMELING POINT SOURCE CATEGORY

GENERAL PROVISIONS

Sec.
466.01 Applicability.
466.02 General definitions.
466.03 Monitoring and reporting requirements.
466.04 Compliance date for PSES.

Subpart A—Steel Basis Material Subcategory

466.10 Applicability; description of the steel basis material.
466.11 Effluent limitations representing the degree of effluent reduction attainable by the application of the best practicable control technology currently available.
466.12 Effluent limitations representing the degree of effluent reduction attainable by the application of the best available technology economically achievable.
466.13 New source performance standards.
466.14 Pretreatment standards for existing sources.
466.15 Pretreatment standards for new sources.

Subpart B—Cast Iron Basis Material Subcategory

466.20 Applicability; description of the cast iron basis material subcategory.
466.21 Effluent limitations representing the degree of effluent reduction attainable by the application of the best practicable control technology currently available.
466.22 Effluent limitations representing the degree of effluent reduction attainable by the application of the best available technology economically achievable.
466.23 New source performance standards.
466.24 Pretreatment standards for existing sources.
466.25 Pretreatment standards for new sources.

Subpart C—Aluminum Basis Material Subcategory

466.30 Applicability; description of the aluminum basis material subcategory.
466.31 Effluent limitations representing the degree of effluent reduction attainable by the application of the best practicable control technology currently available.
466.32 Effluent limitations representing the degree of effluent reduction attainable by the application of the best available technology economically achievable.
466.33 New source performance standards.
466.34 Pretreatment standards for existing sources.
466.35 Pretreatment standards for new sources.

Subpart D—Copper Basis Material Subcategory

466.40 Applicability; description of the copper basis material subcategory.
466.41—466.42 [Reserved]
466.43 New source performance standards.
466.44 [Reserved]
466.45 Pretreatment standards for new sources.

AUTHORITY: Secs. 301, 304 (b), (c), (e), and (g), 306 (b) and (c), 307 and 501 of the Clean Water Act (the Federal Water Pollution Control Act Amendments of 1972, as amended by the Clean Water Act of 1977) (the ''Act''); 33 U.S.C. 1311, 1314 (b), (c), (e) and (g), 1316 (b) and (c), 1317 (b) and (c), and 1361; 86 Stat. 816, Pub. L. 92–500; 91 Stat. 1567, Pub. L. 95–217.

SOURCE: 47 FR 53184, Nov. 24, 1982, unless otherwise noted.

GENERAL PROVISIONS

§ 466.01 Applicability.

(a) Except as provided in paragraphs (b) and (c) of this section, the provisions of this part apply to any porcelain enameling facility which discharges pollutants to waters of the United States or introduces pollutants into a publicly owned treatment works.

(b) Any existing porcelain enameling facility which prepares or coats less than 1600 m^2/day and which introduces less than 60,000 l/day of wastewater into a publicly owned treatment works is not controlled by the pretreatment standards for existing sources established by this regulation. Such facilities must comply with the provisions of 40 CFR part 403.

(c) This part does not apply to the porcelain enameling on precious metal basis material.

(d) When wastewaters from coating cast iron are cotreated with wastewaters from coating steel, the limitations for coating steel contained in § 466.11 may be applied to the entire wastestream.

[47 FR 53184, Nov. 24, 1982, as amended at 50 FR 36543, Sept. 6, 1985]

§ 466.02 General definitions.

In addition to the definitions set forth in 40 CFR part 401, the following definitions apply to this part:

(a) ''Porcelain enameling'' means the entire process of applying a fused vitreous enamel coating to a metal basis material. Usually this includes metal preparation and coating operations.

(b) ''Basis material'' means the metal part or base onto which procelain enamel is applied.

(c) ''Area processed'' means the total basis material area exposed to processing solutions.

(d) ''Area coated'' means the area of basis material covered by each coating of enamel.

(e) ''Coating operations'' means all of the operations associated with preparation and application of the vitreous coating. Usually this includes ballmilling, slip transport, application of slip to the workpieces, cleaning and recovery of faulty parts, and firing (fusing) of the enamel coat.

(f) ''Metal preparation'' means any and all of the metal processing steps preparatory to applying the enamel slip. Usually this includes cleaning, pickling and applying a nickel flash or chemical coating.

(g) The term ''control authority'' is defined as the POTW if it has an approved pretreatment program; in the absence of such a program, the NPDES state if it has an approved pretreatment program or EPA if the State does not have an approved program.

(h) The term ''precious metal'' means gold, silver, or platinum group metals and the principal alloys of those metals.

§ 466.03 Monitoring and reporting requirements.

(a) Periodic analyses for chromium as may be required under part 122 or 403 of this chapter is not required when both of the following conditions are met.

(1) The first wastewater sample of each calendar year has been analyzed and found to contain less than 0.08 mg/l chromium.

(2) The owner or operator of the porcelain enameling facility certifies in writing to the control authority or permit issuing authority that chromium is not contained in the raw materials or process chemicals of that facility and will not be used in the facility.

(b) The ''monthly average'' regulatory values shall be the basis for the monthly average discharge in direct discharge permits and for pretreatment standards. Compliance with the monthly discharge limit is required regardless of the number of samples analyzed and averaged.

(Approved by the Office of Management and Budget under control number 2040–0033)

[47 FR 53184, Nov. 24, 1982, as amended at 48 FR 31405, July 8, 1983]

§ 466.04 Compliance date for PSES.

The compliance date for pretreatment standards for existing sources is November 25, 1985.

[47 FR 53184, Nov. 24, 1982, as amended at 48 FR 41410, Sept. 15, 1983]

Subpart A—Steel Basis Material Subcategory

§ 466.10 Applicability; description of the steel basis material.

This subpart applies to discharges to waters of the United States, and introduction of pollutants into publicly owned treatment works from porcelain enameling on steel basis materials.

§ 466.11 Effluent limitations representing the degree of effluent reduction attainable by the application of the best practicable control technology currently available.

Except as provided in 40 CFR 125.30 through 125.32, any existing point source subject to this subpart must achieve the following effluent limitations for metal preparation operations and for coating operations representing the degree of effluent reduction attainable by the application of the best practicable control technology currently available (BPT):

SUBPART A—BPT EFFLUENT LIMITATIONS

Pollutant or pollutant property	Maximum for any 1 day		Maximum for monthly average	
	Metal preparation	Coating operation	Metal preparation	Coating operation
	Metric units—mg/m² of area processed or coated			
Chromium	16.82	3.41	6.81	1.38
Lead	6.01	1.21	5.21	1.06
Nickel	56.46	11.43	40.05	8.11
Zinc	53.26	10.78	22.43	4.54
Aluminum	182.20	36.87	74.47	15.07
Iron	112.12	22.69	56.06	11.34
Oil and grease	800.84	162.10	480.51	97.23
TSS	1642.00	332.20	800.90	162.00
pH	(1)	(1)	(1)	(1)
	English Units—pounds per 1 million ft² of area processed or coated			
Chromium	3.45	0.07	1.40	0.29
Lead	1.23	0.25	1.07	0.22
Nickel	11.57	2.34	8.20	1.66
Zinc	10.91	2.21	4.60	0.93
Aluminum	37.32	7.55	15.26	3.09
Iron	22.96	4.65	11.48	2.32
Oil and grease	164.03	33.19	98.42	19.92
TSS	337.00	68.10	164.00	33.20
pH	(1)	(1)	(1)	(1)

[1] Within the range 7.5 to 10.0 at all times.

[47 FR 53184, Nov. 24, 1982, as amended at 50 FR 36543, Sept. 6, 1985]

§ 466.12 Effluent limitations representing the degree of effluent reduction attainable by the application of the best available technology economically achievable.

Except as provided in 40 CFR 125.30 through 125.32, any existing point source subject to this subpart must achieve the following effluent limitations representing the degree of effluent reduction attainable by the application of the best available technology economically achievable:

SUBPART A—BAT EFFLUENT LIMITATIONS

Pollutant or pollutant property	Maximum for any 1 day		Maximum for monthly average	
	Metal preparation	Coating operation	Metal preparation	Coating operation
	Metric units—mg/m² of area processed or coated			
Chromium	16.82	0.53	6.81	0.22
Lead	6.01	0.19	5.21	0.16
Nickel	56.50	1.78	40.05	1.26
Zinc	53.30	1.68	22.43	0.71
Aluminum	182.00	5.74	74.48	2.35
Iron	112.12	3.53	56.06	1.77
	English Units—pounds per 1 million ft² of area processed or coated			
Chromium	3.45	0.11	1.4	0.05
Lead	1.23	0.04	1.07	0.03
Nickel	11.57	0.37	8.20	0.26
Zinc	10.91	0.35	4.60	0.15
Aluminum	37.32	1.18	15.26	0.48
Iron	22.96	0.72	11.48	0.36

[47 FR 53184, Nov. 24, 1982, as amended at 50 FR 36543, Sept. 6, 1985]

§ 466.13 New source performance standards.

Any new source subject to this subpart must achieve the following new source performance standards:

SUBPART A—NSPS

Pollutant or pollutant property	Maximum for any 1 day		Maximum for monthly average	
	Metal preparation	Coating operation	Metal preparation	Coating operation
	Metric units—mg/m² of area processed or coated			
Chromium	3.37	0.47	1.5	0.19
Lead	1.0	0.13	0.9	0.11
Nickel	12.0	1.51	6.3	0.79
Zinc	10.2	1.29	4.2	0.53
Aluminum	30.3	3.82	12.4	1.56
Iron	28.0	3.53	14.0	1.77
Oil and grease	100.0	12.60	100.0	12.60
TSS	150.0	18.91	120.0	15.12
pH	(1)	(1)	(1)	(1)
	English units—pounds per 1 million ft² of area processed or coated			
Chromium	0.76	0.10	0.31	0.04
Lead	0.21	0.03	0.19	0.03
Nickel	2.46	0.31	1.29	0.16
Zinc	2.09	0.27	0.86	0.11
Aluminum	6.21	0.78	2.54	0.32
Iron	5.74	0.72	2.87	0.36
Oil and grease	20.48	2.58	20.48	2.58
TSS	30.72	3.87	24.58	3.10
pH	(1)	(1)	(1)	(1)

[1] Within the range 7.5 to 10.0 at all times.

[47 FR 53184, Nov. 24, 1982, as amended at 50 FR 36543, Sept. 6, 1985]

§ 466.14 Pretreatment standards for existing sources.

(a) Except as provided in 40 CFR 403.7 and 403.13, any existing source subject to this subpart which introduces pollutants into a publicly owned treatment works must comply with 40 CFR part 403 and achieve the following pretreatment standards for existing sources.

SUBPART A—PSES

Pollutant or pollutant property	Maximum for any 1 day	Maximum for monthly average
	Milligrams per liter (mg/l)	
Chromium	0.42	0.17
Lead	0.15	0.13
Nickel	1.41	1.00
Zinc	1.33	0.56

(b) In cases where POTW find it necessary to impose mass effluent pretreatment standards the following equivalent mass standards are provided:

SUBPART A—PSES

Pollutant or pollutant property	Maximum for any 1 day		Maximum for monthly average	
	Metal preparation	Coating operation	Metal preparation	Coating operation
	Metric units—mg/m² of area processed or coated			
Chromium	16.82	0.53	6.81	0.22
Lead	6.01	0.19	5.21	0.16
Nickel	56.5	1.78	40.1	1.26
Zinc	53.3	1.68	22.5	0.71
	English units—lbs/1 million ft² of area processed or coated			
Chromium	3.45	0.11	1.4	0.05
Lead	1.23	0.04	1.07	0.03
Nickel	11.6	0.37	8.20	0.26
Zinc	10.9	0.35	4.6	0.15

[47 FR 53184, Nov. 24, 1982, as amended at 50 FR 36543, Sept. 6, 1985]

§ 466.15 Pretreatment standards for new sources.

Except as provided in 40 CFR 403.7 and 403.13, any new source subject to this subpart which introduces pollutants into a publicly owned treatment works must comply with 40 CFR part 403 and achieve the following pretreatment standards for new sources:

SUBPART A—PSNS

Pollutant or pollutant property	Maximum for any 1 day		Maximum for monthly average	
	Metal preparation	Coating operation	Metal prepartion	Coating operation
	Metric units—mg/m² of area processed or coated			
Chromium	3.7	0.47	1.5	0.19
Lead	1.0	0.13	0.9	0.11
Nickel	12.0	1.51	6.3	0.79
Zinc	10.2	1.29	4.2	0.53
	English units—pounds per 1 million ft² of area processed or coated			
Chromium	0.76	0.10	0.31	0.04
Lead	0.2	0.03	0.19	0.002
Nickel	2.46	0.31	1.29	0.16
Zinc	2.09	0.27	0.86	0.11

[47 FR 53184, Nov. 24, 1982, as amended at 50 FR 36543, Sept. 6, 1985]

Subpart B—Cast Iron Basis Material Subcategory

§ 466.20 Applicability; description of the cast iron basis material subcategory.

This subpart applies to discharges to waters of the United States and introductions of pollutants into publicly owned treatment works from porcelain enameling of cast iron basis materials.

§ 466.21 Effluent limitations representing the degree of effluent reduction attainable by the application of the best practicable control technology currently available.

Except as provided in 40 CFR 125.30 through 125.32, any existing point source subject to this subpart must achieve the following effluent limitations representing the degree of effluent reduction attainable by the application of the best practicable control technology currently available.

(a) There shall be no discharge of process wastewater pollutants from metal preparation operations.

(b) The discharge of process wasterwater pollutants from all porcelain enameling coating operations shall not exceed the values set forth below:

SUBPART B—BPT EFFLUENT LIMITATIONS

Pollutant or pollutant Property	Maximum for any 1 day		Maximum for monthly average	
	Mg/m² (pounds per/1million ft²) of Area Coated			
Chromium	0.29	(0.06)	0.12	(0.024)
Lead	0.11	(0.02)	0.09	(0.02)
Nickle	0.98	(0.02)	0.7	(0.15)
Zinc	0.93	(0.19)	0.39	(0.08)
Aluminum	3.16	(0.65)	1.29	(0.27)
Iron	0.86	(0.18)	0.44	(0.09)
Oil and grease	13.86	(2.84)	8.32	(1.71)
TSS	28.42	(5.82)	13.86	(2.84)
pH	(1)	(1)	(1)	(1)

[1] Within the range 7.5 to 10.0 at all times.

§ 466.22 Effluent limitation representing the degree of effluent reduction attainable by the application of the best available technology economically achievable.

Except as provided in 40 CFR 125.30 through 125.32, any existing point source subject to this subpart must achieve the following effluent limitations representing the degree of effluent reduction attainable by the application of the best available technology economically achievable.

(a) There shall be no discharge of process wastewater pollutants from metal preparation operations.

(b) The discharge of process wastewater pollutants from all porcelain enameling coating operations shall not exceed the values set forth below:

SUBPART B—BAT EFFLUENT LIMITATIONS

Pollutant or pollutant property	Maximum for any 1 day		Maximum for monthly average	
	Mg/m² (pounds per/million ft²) of area coated			
Chromium	0.53	(0.11)	0.22	(0.05)
Lead	0.19	(0.04)	0.16	(0.03)
Nickel	1.78	(0.37)	1.26	(0.26)
Zinc	1.68	(0.35)	0.71	(0.15)
Aluminum	5.74	(1.18)	2.35	(0.48)
Iron	1.55	(0.32)	0.79	(0.16)

[47 FR 53184, Nov. 24, 1982, as amended at 50 FR 36543, Sept. 6, 1985]

§ 466.23 New source performance standards.

Any new source subject to this subpart must achieve the following new source performance standards.

(a) There shall be no discharge of process wastewater pollutants from metal preparation operations.

(b) The discharge of process wastewater pollutants from all porcelain enameling coating operations shall not exceed the values set forth below:

SUBPART B—NSPS

Pollutant or pollutant property	Maximum for any 1 day		Maximum for monthly average	
	Mg/m² (pounds per million ft²) of area coated			
Chromium	0.47	(0.10)	0.19	(0.04)
Lead	0.13	(0.03)	0.11	(0.02)
Nickel	0.69	(0.14)	0.47	(0.10)
Zinc	1.29	(0.27)	0.53	(0.11)
Aluminum	3.82	(0.78)	1.56	(0.32)
Iron	1.55	(0.32)	0.79	(0.16)
Oil and grease	12.60	(2.58)	12.60	(2.58)
TSS	18.91	(3.87)	15.12	(3.10)
pH	(1)	(1)	(1)	(1)

[1] Within the range 7.5 to 10.0 at all times.

[47 FR 53184, Nov. 24, 1982, as amended at 50 FR 36544, Sept. 6, 1985]

§ 466.24 Pretreatment standards for existing sources.

(a) Except as provided in 40 CFR 403.7 and 403.13, any existing source subject to this subpart which introduces pollutants into a publicly owned treatment works must comply with 40 CFR part 403 and achieve the following pretreatment standards for existing sources.

(1) There shall be no discharge of process wastewater pollutants from metal preparation operations.

(2) The discharge of process wastewater pollutants from all porcelain enameling coating operations shall not exceed the values set forth below:

SUBPART B—PSES

Pollutant or pollutant property	Maximum for any 1 day	Maximum for monthly average
	Milligrams per liter (mg/l)	
Chromium	0.42	0.17
Lead	0.15	0.13
Nickel	1.41	1.00
Zinc	1.33	0.56

(b) In cases when POTW find it necessary to impose mass pretreatment standards the following equivalent mass standards are provided.

(1) There shall be no discharge of process wastewater pollutants from metal preparation operations.

(2) The discharge of process watewater pollutants from all porcelain enameling costing operations shall not exceed the values set forth below:

SUBPART B—PSES

Pollutant or pollutant property	Maximum for any 1 day		Maximum for monthly average	
	Metric units—mg/m^2 (English Units—pounds per million ft^2) of area coated			
Chromium	0.53	(0.11)	0.22	(0.05)
Lead	0.19	(0.04)	0.16	(0.03)
Nickel	1.78	(0.37)	1.26	(0.26)
Zinc	1.68	(0.35)	0.71	(0.15)

[47 FR 53184, Nov. 24, 1982, as amended at 50 FR 36544, Sept. 6, 1985]

§ 466.25 Pretreatment standards for new sources.

Except as provided in 40 CFR 403.7, any new source subject to this subpart which introduces pollutants into a publicy owned treatment works must comply with 40 CFR part 403 and achieve the following pretreatment standards for new sources.

(a) There shall be no discharge of process wastewater pollutants from metal preparation operations.

(b) The discharge of process wastewater pollutants from all porcelain enameling coating operations shall not exceed the values set forth below:

SUBPART B— PSNS

Pollutant or pollutant property	Maximum for any 1 day		Maximum for monthly average	
	Mg/m^2 (pounds per million ft^2) of area coated			
Chromium	0.47	(0.10)	0.19	(0.04)
Lead	0.13	(0.03)	0.11	(0.02)
Nickel	0.69	(0.14)	0.47	(0.10)
Zinc	1.29	(0.27)	0.53	(0.11)

[47 FR 53184, Nov. 24, 1982, as amended at 50 FR 36544, Sept. 6, 1985]

Subpart C—Aluminum Basis Material Subcategory

§ 466.30 Applicability; description of the aluminum basis material subcategory.

This subpart applies to discharges to waters of the United States and introductions of pollutants into publicly owned treatment works from porcelain enameling of aluminum basis materials.

§ 466.31 Effluent limitations representing the degree of effluent reduction attainable by the application of the best practicable control technology currently available.

Except as provided in 40 CFR 125.30 through 125.32, any existing point source subject to this subpart must achieve the following effluent limitations representing the degree of effluent reduction attainable by the application of the best practicable control technology currently available:

SUBPART C— BPT EFFLUENT LIMITATIONS

Pollutant or pollutant property	Maximum for any 1 day		Maximum for monthly average	
	Metal preparation	Coating operation	Metal preparation	Coating operation
	Metric units—mg/m² of area processed or coated			
Chromium	16.34	6.32	6.63	2.56
Lead	5.84	2.26	5.06	1.96
Nickel	54.85	21.21	38.90	15.04
Zinc	51.73	20.01	21.79	8.43
Aluminum	176.98	68.44	72.35	27.98
Iron	47.85	18.50	24.51	9.48
Oil and grease	777.92	300.84	466.76	108.50
TSS	1,594.74	616.68	777.92	300.82
pH	(1)	(1)	(1)	(1)
	English units—pounds per 1 million ft² of area processed or coated			
Chromium	3.35	1.30	1.37	0.53
Lead	1.20	0.47	1.04	0.40
Nickel	11.24	4.35	7.97	3.08
Zinc	10.6	4.10	4.46	1.73
Aluminum	36.25	14.02	14.82	5.73
Iron	9.80	3.79	5.02	1.94
Oil and grease	159.33	61.61	95.60	36.97
TSS	326.62	126.33	159.33	61.61
pH	(1)	(1)	(1)	(1)

[1] Within the range 7.5 to 10.0 at all times.

§ 466.32 Effluent limitations representing the degree of effluent reduction attainable by the application of the best available technology economically achievable.

Except as provided in 40 CFR 125.30 through 125.32, any existing point source subject to this subpart must achieve the following effluent limitations representing the degree of effluent reduction attainable by the application of the best available technology economically achievable.

SUBPART C—BAT EFFLUENT LIMITATIONS

Pollutant or pollutant property	Maximum for any 1 day		Maximum for monthly average	
	Metal preparation	Coating operation	Metal preparation	Coating operation
	Metric units—mg/m² of area processed or coated			
Chromium	16.34	0.53	6.62	0.22
Lead	5.84	0.19	5.06	0.16
Nickel	54.85	1.78	38.90	1.26
Zinc	51.74	1.68	21.79	1.71
Aluminum	176.98	5.74	72.35	2.35
Iron	47.85	1.55	24.51	0.80
	English units—pounds per 1 million ft² of area processed or coated			
Chromium	3.35	0.11	1.36	0.05
Lead	1.20	0.04	1.04	0.03
Nickel	11.24	0.37	7.97	0.26
Zinc	10.60	0.35	4.46	0.35
Aluminum	36.25	1.18	14.82	0.48
Iron	9.80	0.32	5.02	0.16

[47 FR 53184, Nov. 24, 1982, as amended at 50 FR 36544, Sept. 6, 1985]

§ 466.33 New source performance standards.

Any new source subject to this subpart must achieve the following new source performance standards:

SUBPART C—NSPS

Pollutant or pollutant property	Maximum for any 1 day		Maximum for monthly average	
	Metal preparation	Coating operation	Metal preparation	Coating operation
	Metric units—mg/m² of area processed or coated			
Chromium	3.60	0.47	1.46	0.19
Lead	0.97	0.13	0.88	0.11
Nickel	5.35	0.69	3.60	0.47
Zinc	9.92	1.29	4.09	0.53
Aluminum	29.46	3.82	12.06	1.56
Iron	11.96	1.55	6.13	0.79
Oil and grease	97.24	12.60	97.24	12.60
TSS	145.86	18.91	116.69	15.12
pH	(1)	(1)	(1)	(1)
	English units—pounds per 1 million ft² of area processed or coated			
Chromium	0.74	0.10	0.30	0.04
Lead	0.20	0.03	0.18	0.20
Nickel	1.10	0.14	0.74	0.10
Zinc	2.03	0.27	0.84	0.11
Aluminum	6.03	0.78	2.47	0.32
Iron	2.45	0.32	1.26	0.16
Oil and grease	19.92	2.58	19.92	2.58
TSS	29.88	3.87	23.90	3.10
pH	(1)	(1)	(1)	(1)

[1] Within the range 7.5 to 10.0 at all times.

[47 FR 53184, Nov. 24, 1982, as amended at 50 FR 36544, Sept. 6, 1985]

§ 466.34 Pretreatment standards for existing sources.

(a) Except as provided in 40 CFR 403.7 and 403.13, any existing source subject to this subpart which introduces pollutants into a publicly owned treatment works must comply with 40 CFR part 403 and achieve the following pretreatment standards for existing sources.

SUBPART C— PSES

Pollutant or pollutant property	Maximum for any 1 day	Maximum for monthly average
	Milligrams per liter (mg/l)	
Chromium	0.42	0.17
Lead	0.15	0.13
Nickel	1.41	1.00
Zinc	1.33	0.56

(b) In cases where POTW find it necessary to impose mass pretreatment standards the following equivalent mass standards are provided:

SUBPART C— PSES

Pollutant or pollutant property	Maximum for any 1 day		Maximum for monthly average	
	Metal preparation	Coating operation	Metal preparation	Coating operation
	Metric units—mg/m² of area processed or coated			
Chromium	16.34	0.53	6.62	0.22
Lead	5.84	0.19	5.06	0.16
Nickel	54.85	1.78	38.9	1.26
Zinc	51.74	1.68	21.79	1.71
	English units—pounds per 1 million ft² of area processed or coated			
Chromium	3.35	0.11	1.36	0.05
Lead	1.20	0.04	1.04	0.03
Nickel	11.24	0.37	7.97	0.25
Zinc	10.6	0.35	4.46	0.35

[47 FR 53184, Nov. 24, 1982, as amended at 50 FR 36544, Sept. 6, 1985]

§ 466.35 Pretreatment standards for new sources.

Except as provided in 40 CFR 403.7, any new source subject to this subpart which introduces pollutants into a publicly owned treatment works must comply with 40 CFR part 403 and achieve the following pretreatment standards for new sources.

SUBPART C—PSNS

Pollutant or pollutant property	Maximum for any 1 day		Maximum for monthly average	
	Metal preparation	Coating operation	Metal preparation	Coating operation
	Metric units—mg/m² of area processed or coated			
Chromium	3.60	0.47	1.46	0.19
Lead	0.97	0.13	0.88	0.11
Nickel	5.35	0.69	3.60	0.47
Zinc	9.92	1.29	4.09	0.53
	English units—pounds per 1 million ft² of area processed or coated			
Chromium	0.74	0.10	0.30	0.04
Lead	0.20	0.03	0.18	0.02
Nickel	1.10	0.14	0.74	0.10
Zinc	2.03	0.27	0.84	0.11

[47 FR 53184, Nov. 24, 1982, as amended at 50 FR 36545, Sept. 6, 1985]

Subpart D—Copper Basis Material Subcategory

§ 466.40 Applicability; description of the copper basis material subcategory.

This subpart applies to discharges to waters of the United States and introductions of pollutants into publicly owned treatment works from porcelain enameling of copper basis materials.

§§ 466.41–466.42 [Reserved]

§ 466.43 New source performance standards.

Any new source subject to this subpart must achieve the following new source performance standards:

SUBPART D—NSPS

Pollutant or pollutant property	Maximum for any 1 day		Maximum for monthly average	
	Metal preparation	Coating operation	Metal preparation	Coating operation
	Metric units—mg/m² of area processed or coated			
Chromium	6.23	0.46	2.52	0.19
Lead	1.69	0.13	1.52	0.11
Nickel	9.25	0.69	6.23	0.47
Zinc	17.16	1.29	7.07	0.53
Aluminum	50.97	3.82	20.86	1.56
Iron	20.69	1.55	10.60	0.79
Oil and grease	168.23	12.60	168.23	12.60
TSS	252.35	18.91	201.88	15.12
pH	(1)	(1)	(1)	(1)
	English units—pounds per 1 million ft² of area processed or coated			
Chromium	1.28	0.10	0.52	0.04
Lead	0.35	0.03	0.31	0.03
Nickel	1.90	0.14	1.28	0.10
Zinc	3.52	0.27	1.45	0.11
Aluminum	10.44	0.78	4.27	0.32
Iron	4.24	0.32	2.17	0.16
Oil and grease	34.46	2.58	34.46	2.58
TSS	51.69	3.87	41.35	3.10
pH	(1)	(1)	(1)	(1)

[1] Within the range 7.5 to 10.0 at all times.

[47 FR 53184, Nov. 24, 1982, as amended at 50 FR 36545, Sept. 6, 1985]

§ 466.44 [Reserved]

§ 466.45 Pretreatment standards for new sources.

Any new source subject to this subpart which introduces pollutants into a publicly owned treatment works must comply with 40 CFR part 403 and achieve the following pretreatment standards for new sources:

SUBPART D—PSNS

Pollutant or pollutant property	Maximum for any 1 day		Maximum for monthly average	
	Metal preparation	Coating operation	Metal preparation	Coating operation
	Metric units—mg/m² of area processed or coated			
Chromium	6.23	0.46	2.52	0.19
Lead	1.69	0.13	1.52	0.11
Nickel	9.25	0.69	6.23	0.47
Zinc	17.16	1.29	7.07	0.53
	English units—pounds per 1 million ft² of area processed or coated			
Chromium	1.28	0.10	0.52	0.04
Lead	0.35	0.03	0.31	0.02
Nickel	1.90	0.14	1.28	0.10
Zinc	3.52	0.27	1.45	0.11

[47 FR 53184, Nov. 24, 1982, as amended at 50 FR 36545, Sept. 6, 1985]

PART 467—ALUMINUM FORMING POINT SOURCE CATEGORY

GENERAL PROVISIONS

Sec.
467.01 Applicability.
467.02 General definitions.
467.03 Monitoring and reporting requirements.
467.04 Compliance date for PSES.
467.05 Removal allowances for pretreatment standards.

Subpart A—Rolling With Neat Oils Subcategory

467.10 Applicability; description of the rolling with neat oils subcategory.
467.11 Specialized definitions.
467.12 Effluent limitations representing the degree of effluent reduction attainable by the application of the best practicable control technology currently available.
467.13 Effluent limitations representing the degree of effluent reduction attainable by the application of the best available technology economically achievable.
467.14 New source performance standards.
467.15 Pretreatment standards for existing sources.
467.16 Pretreatment standards for new sources.
467.17 Effluent limitations representing the degree of effluent reduction attainable

by the application of the best conventional pollutant control technology. [Reserved]

Subpart B—Rolling With Emulsions Subcategory

467.20 Applicability; description of the rolling with emulsions subcategory.
467.21 Specialized definitions.
467.22 Effluent limitations representing the degree of effluent reduction attainable by the application of the best practicable control technology currently available.
467.23 Effluent limitations representing the degree of effluent reduction attainable by the application of the best available technology economically achievable.
467.24 New source performance standards.
467.25 Pretreatment standards for existing sources.
467.26 Pretreatment standards for new sources.
467.27 Effluent limitations representing the degree of effluent reduction attainable by the applicaton of the best conventional pollutant control technology. [Reserved]

Subpart C—Extrusion Subcategory

467.30 Applicability; description of the extrusion subcategory.
467.31 Specialized definitions.
467.32 Effluent limitations representing the degree of effluent reduction attainable by the application of the best practicable control technology currently available.
467.33 Effluent limitations representing the degree of effluent reduction attainable by the application of the best available technology economically achievable.
467.34 New source performance standards.
467.35 Pretreatment standards for existing sources.
467.36 Pretreatment standards for new sources.
467.37 Effluent limitations representing the degree of effluent reduction attainable by the application of the best conventional pollutant control technology. [Reserved]

Subpart D—Forging Subcategory

467.40 Applicability; description of forging subcategory.
467.41 Specialized definitions.
467.42 Effluent limitations representing the degree of effluent reduction attainable by the application of the best practicable control technology currently available. [Reserved]
467.43 Effluent limitations representing the degree of effluent reduction attainable by the application of the best available technology economically achievable. [Reserved]
467.44 New source performance standards.
467.45 Pretreatment standards for existing sources.
467.46 Pretreatment standards for new sources.
467.47 Effluent limitations representing the degree of effluent reduction attainable by the application of the best conventional pollutant control technology. [Reserved]

Subpart E—Drawing With Neat Oils Subcategory

467.50 Applicability; description of the drawing with neat oils subcategory.
467.51 Specialized definitions.
467.52 Effluent limitations representing the degree of effluent reduction attainable by the application of the best practicable control technology currently available.
467.53 Effluent limitations representing the degree of effluent reduction attainable by the application of the best available technology economically achievable.
467.54 New source performance standards.
467.55 Pretreatment standards for existing sources.
467.56 Pretreatment standards for new sources.
467.57 Effluent limitations representing the degree of effluent reduction attainable by the application of the best conventional pollutant control technology. [Reserved]

Subpart F—Drawing With Emulsions or Soaps Subcategory

467.60 Applicability; description of the drawing with emulsions or soaps subcategory.
467.61 Specialized definitions.
467.62 Effluent limitations representing the degree of effluent reduction attainable by the application of the best practicable control technology currently available.
467.63 Effluent limitations representing the degree of effluent reduction attainable by the application of the best available technology economically achievable.
467.64 New source performance standards.
467.65 Pretreatment standards for existing sources.
467.66 Pretreatment standards for new sources.
467.67 Effluent limitations representing the degree of effluent reduction attainable by the application of the best conventional pollutant control technology. [Reserved]

AUTHORITY: Secs. 301, 304(b), (c), (e), and (g), 306(b) and (c), 307(b) and (c), 308 and 501 of the Clean Water Act (the Federal Water Pollution Control Act Amendments of 1972, as amended by the Clean Water Act of 1977) and the Water Quality Act of 1987 (the

''Act''); 33 U.S.C. 1311, 1314(b), (c), (e), and (g), 1316(b) and (c), 1317(b) and (c), 1318 and 1361; 86 Stat. 816, Pub. L. 92–500; 91 Stat. 1567, Pub. L. 95–217; 101 Stat. 7, Pub. L. 100–4.

SOURCE: 48 FR 49149, Oct. 24, 1983, unless otherwise noted.

GENERAL PROVISIONS

§ 467.01 Applicability.

(a) Aluminum forming includes commonly recognized forming operations such as rolling, drawing, extruding, and forging and related operations such as heat treatment, casting, and surface treatments. Surface treatment of aluminum is any chemical or electrochemical treatment applied to the surface of aluminum. Such surface treatment is considered to be a part of aluminum forming whenever it is performed as an integral part of aluminum forming. For the purposes of this regulation, surface treatment of aluminum is considered to be an integral part of aluminum forming whenever it is performed at the same plant site at which aluminum is formed and such operations are not considered for regulation under the Electroplating and Metal Finishing provisions of 40 CFR parts 413 and 433. Casting aluminum when performed as an integral part of aluminum forming and located on-site at an aluminum forming plant is considered an aluminum forming operation and is covered under these guidelines. When aluminum forming is performed on the same site as primary aluminum reduction the casting shall be regulated by the nonferrous metals guidelines if there is no cooling of the aluminum prior to casting. If the aluminum is cooled prior to casting then the casting shall be regulated by the aluminum forming guidelines.

(b) This part applies to any aluminum forming facility, except for plants identified under paragraph (c) of this section, which discharges or may discharge pollutants to waters of the United States or which introduces or may introduce pollutants into a publicly owned treatment works.

(c) This part is applicable to indirect discharging aluminum forming plants that extrude less than 3 million pounds of product per year and draw, with emulsions or soaps, less than 1 million pounds per year.

NOTE: This paragraph is promulgated as an Interim Final Rule.

[48 FR 49149, Oct. 24, 1983; 49 FR 11631, Mar. 27, 1984]

§ 467.02 General definitions.

In addition to the definitions set forth in 40 CFR part 401, the following definitions apply to this part:

(a) *Aluminum forming* is a set of manufacturing operations in which aluminum and aluminum alloys are made into semifinished products by hot or cold working.

(b) *Ancillary operation* is a manufacturing operation that has a large flow, discharges significant amounts of pollutants, and may not be present at every plant in a subcategory, but when present is an integral part of the aluminum forming process.

(c) *Contact cooling water* is any wastewater which contacts the aluminum workpiece or the raw materials used in forming aluminum.

(d) *Continuous casting* is the production of sheet, rod, or other long shapes by solidifying the metal while it is being poured through an open-ended mold using little or no contact cooling water. Continuous casting of rod and sheet generates spent lubricants and rod casting also generates contact cooling water.

(e) *Degassing* is the removal of dissolved hydrogen from the molten aluminum prior to casting. Chemicals are added and gases are bubbled through the molten aluminum. Sometimes a wet scrubber is used to remove excess chlorine gas.

(f) *Direct chill casting* is the pouring of molten aluminum into a water-cooled mold. Contact cooling water is sprayed onto the aluminum as it is dropped into the mold, and the aluminum ingot falls into a water bath at the end of the casting process.

(g) *Drawing* is the process of pulling metal through a die or succession of dies to reduce the metal's diameter or alter its shape. There are two aluminum forming subcategories based on the drawing process. In the drawing with neat oils subcategory, the drawing process uses a pure or neat oil as a

lubricant. In the drawing with emulsions or soaps subcategory, the drawing process uses an emulsion or soap solution as a lubricant.

(h) *Emulsions* are stable dispersions of two immiscible liquids. In the aluminum forming category this is usually an oil and water mixture.

(i) *Cleaning or etching* is a chemical solution bath and a rinse or series of rinses designed to produce a desired surface finish on the workpiece. This term includes air pollution control scrubbers which are sometimes used to control fumes from chemical solution baths. Conversion coating and anodizing when performed as an integral part of the aluminum forming operations are considered cleaning or etching operations. When conversion coating or anodizing are covered here they are not subject to regulation under the provisions of 40 CFR Part 433, Metal Finishing.

(j) *Extrusion* is the application of pressure to a billet of aluminum, forcing the aluminum to flow through a die orifice. The extrusion subcategory is based on the extrusion process.

(k) *Forging* is the exertion of pressure on dies or rolls surrounding heated aluminum stock, forcing the stock to change shape and in the case where dies are used to take the shape of the die. The forging subcategory is based on the forging process.

(l) *Heat treatment* is the application of heat of specified temperature and duration to change the physical properties of the metal.

(m) Hot water seal is a heated water bath (heated to approximately 180 °F) used to seal the surface coating on formed aluminum which has been anodized and coated. In establishing an effluent allowance for this operation, the hot water seal shall be classified as a cleaning or etching rinse.

(n) *In-process control technology* is the conservation of chemicals and water throughout the production operations to reduce the amount of wastewater to be discharged.

(o) *Neat oil* is a pure oil with no or few impurities added. In aluminum forming its use is mostly as a lubricant.

(p) *Rolling* is the reduction in thickness or diameter of a workpiece by passing it between lubricated steel rollers. There are two subcategories based on the rolling process. In the rolling with neat oils subcategory, pure or neat oils are used as lubricants for the rolling process. In the rolling with emulsions subcategory, emulsions are used as lubricants for the rolling process.

(q) The term *Total Toxic Organics (TTO)* shall mean the sum of the masses or concentrations of each of the following toxic organic compounds which is found in the discharge at a concentration greater than 0.010 mg/1:

p-chloro-m-cresol
2-chlorophenol
2,4-dinitrotoluene
1,2-diphenylhydrazine
ethyblenzene
fluoranthene
isophorone
napthalene
N-nitro sodi phenyl amine
phenol
benzo(a) pyrene
benzo(ghi)perylene
fluorene
phenanthrene
dibenzo(a,h) anthracene
indeno(1,2,3-c,d)pyrene
pyrene
tetrachloroethylene
toluene
trichloroethylene
endosulfan sulfate
bis(2-ethyl hexyl)phthalate
diethylphthalate
3,4-benzofluoranthene
benzo(k)fluoranthene
chrysene
acenaphthylene
anthracene
di-n-butyl phthalate
endrin
endrin aldehyde
PCB–1242, 1254, 1221
PCB–1232, 1248, 1260, 1016
acenaphthene

(r) *Stationary casting* is the pouring of molten aluminum into molds and allowing the metal to air cool.

(s) *Wet scrubbers* are air pollution control devices used to remove particulates and fumes from air by entraining the pollutants in a water spray.

(t) *BPT* means the best practicable control technology currently available under section 304(b)(1) of the Act.

(u) *BAT* means the best available technology economically achievable under section 304(b)(2)(B) of the Act.

(v) *BCT* means the best conventional pollutant control technology, under section 304(b)(4) of the Act.

(w) *NSPS* means new source performance standards under section 306 of the Act.

(x) *PSES* means pretreatment standards for existing sources, under section 307(b) of the Act.

(y) *PSNS* means pretreatment standards for new sources, under section 307(c) of the Act.

(z) The production normalizing mass (/kkg) for each core or ancillary operation is the mass (off-kkg or off-lb) processed through that operation.

(aa) The term *off-kilogram (off-pound)* shall mean the mass of aluminum or aluminum alloy removed from a forming or ancillary operation at the end of a process cycle for transfer to a different machine or process.

[48 FR 49149, Oct. 24, 1983; 49 FR 11631, Mar. 27, 1984, as amended at 53 FR 52369, Dec. 27, 1988]

§ 467.03 Monitoring and reporting requirements.

The following special monitoring and reporting requirements apply to all facilities controlled by this regulation.

(a) Periodic analyses for cyanide as may be required under part 122 or 403 of this chapter are not required when both of the following conditions are met:

(1) The first wastewater sample of each calender year has been analyzed and found to contain less than 0.07 mg/l cyanide.

(2) The owner or operator of the aluminum forming plant certifies in writing to the POTW authority or permit issuing authority that cyanide is not and will not be used in the aluminum forming process.

(b) As an alternative monitoring procedure for pretreatment, the POTW user may measure and limit oil and grease to the levels shown in pretreatment standards in lieu of measuring and regulating total toxic organics (TTO).

(c) The ''monthly average'' regulatory values shall be the basis for the monthly average discharge limits in direct discharge permits and for pretreatment standards. Compliance with the monthly discharge limit is required regardless of the number of samples analyzed and averaged.

(Information collection requirements in paragraph (a) were approved by the Office of Management and Budget under control number 2040–0033)

[48 FR 49149, Oct. 24, 1983; 49 FR 11631, Mar. 27,1984, as amended at 50 FR 4515, Jan. 31, 1985]

§ 467.04 Compliance date for PSES.

The compliance date for Pretreatment Standards for Existing Sources (PSES) is October 24, 1986.

[48 FR 49149, Oct. 24, 1983; 49 FR 11631, Mar. 27, 1984]

§ 467.05 Removal allowances for pretreatment standards.

Removal allowances pursuant to 40 CFR 403.7(a) may be granted for the toxic metals limited in 40 CFR part 467 when used as indicator pollutants.

[49 FR 11631, Mar. 27, 1984]

Subpart A—Rolling With Neat Oils Subcategory

§ 467.10 Applicability; description of the rolling with neat oils subcategory.

This subpart applies to discharges of pollutants to waters of the United States, and introductions of pollutants into publicly owned treatment works from the core and the ancillary operations of the rolling with neat oils subcategory.

§ 467.11 Specialized definitions.

For the purpose of this subpart:

(a) The ''core'' of the rolling with neat oils subcategory shall include rolling using neat oils, roll grinding, sawing, annealing, stationary casting, homogenizing artificial aging, degreasing, and stamping.

(b) The term ''ancillary operation'' shall mean any operation not previously included in the core, performed on-site, following or preceding the rolling operation. The ancillary operations shall include continuous rod casting, continuous sheet casting, solution heat treatment, cleaning or etching.

§ 467.12 Effluent limitations representing the degree of effluent reduction attainable by the application of the best practicable control technology currently available.

Except as provided in 40 CFR 125.30 through 125.32, any existing point source subject to this subpart must achieve the following effluent limitations for the core operation and for the ancillary operations representing the degree of effluent reduction attainable

by the application of the best practicable control technology currently available:

SUBPART A

Core With an Annealing Furnace Scrubber

Pollutant or pollutant property	BPT effluent limitations	
	Maximum for any 1 day	Maximum for monthly average
	mg/off-kg (lb/million off-lbs) of aluminum rolled with neat oils	
Chromium	0.0360	0.0147
Cyanide	0.0237	0.0098
Zinc	0.119	0.0498
Aluminum	0.525	0.257
Oil and grease	1.634	0.980
Suspended solids	3.348	1.593
pH	(1)	(1)

[1] Within the range of 7.0 to 10 at all times.

SUBPART A

Core Without an Annealing Furnace Scrubber

Pollutant or pollutant property	BPT effluent limitations	
	Maximum for any 1 day	Maximum for monthly average
	mg/off-kg (lb/million off-lbs) of aluminum rolled with neat oils	
Chromium	0.0244	0.010
Cyanide	0.0161	0.0067
Zinc	0.0808	0.0338
Aluminum	0.356	0.174
Oil and grease	1.11	0.664
Suspended solids	2.27	1.079
pH	(1)	(1)

[1] Within the range of 7.0 to 10 at all times.

SUBPART A

Continuous Sheet Casting Spent Lubricant

Pollutant or pollutant property	BPT effluent limitations	
	Maximum for any 1 day	Maximum for monthly average
	mg/off-kg (lb/million off-lbs) of aluminum sheet cast by continuous methods	
Chromium	0.00086	0.00035
Cyanide	0.00057	0.00024
Zinc	0.0029	0.0012
Aluminum	0.0127	0.0063
Oil and grease	0.0393	0.0236
Suspended solids	0.0805	0.0383
pH	(1)	(1)

[1] Within the range of 7.0 to 10 at all times.

SUBPART A

Solution Heat Treatment Contact Cooling Water

Pollutant or pollutant property	BPT effluent limitations	
	Maximum for any 1 day	Maximum for monthly average
	mg/off-kg (lb/million off-lbs) of aluminum quenched	
Chromium	3.39	1.39
Cyanide	2.24	0.93
Zinc	11.25	4.70
Aluminum	49.55	24.66
Oil and grease	154.10	92.46
Suspended solids	315.91	150.25
pH	(1)	(1)

[1] Within the range of 7.0 to 10 at all times.

SUBPART A

Cleaning or Etching Bath

Pollutant or pollutant property	BPT effluent limitations	
	Maximum for any 1 day	Maximum for monthly average
	mg/off-kg (lb/million off-lbs) of aluminum cleaned or etched	
Chromium	0.079	0.032
Cyanide	0.052	0.022
Zinc	0.262	0.110
Aluminum	1.15	0.573
Oil and grease	3.58	2.15
Suspended solids	7.34	3.49
pH	(1)	(1)

[1] Within the range of 7.0 to 10 at all times.

SUBPART A

Cleaning or Etching Rinse

Pollutant or pollutant property	BPT effluent limitations	
	Maximum for any 1 day	Maximum for monthly average
	mg/off-kg (lb/million off-lbs) of aluminum cleaned or etched	
Chromium	6.12	2.51
Cyanide	4.04	1.67
Zinc	20.31	8.49
Aluminum	89.46	44.52
Oil and grease	278.24	166.95
Suspended solids	570.39	271.29
pH	(1)	(1)

[1] Within the range of 7.0 to 10 at all times.

SUBPART A

Cleaning or Etching Scrubber Liquor

Pollutant or pollutant property	BPT effluent limitations	
	Maximum for any 1 day	Maximum for monthly average
	mg/off-kg (lb/million off-lbs) of aluminum cleaned or etched	
Chromium	7.00	2.86
Cyanide	4.61	1.91
Zinc	23.22	9.70
Aluminum	102.24	50.88
Oil and grease	318.00	190.80
Suspended solids	651.90	310.05
pH	([1])	([1])

[1] Within the range of 7.0 to 10 at all times.

[48 FR 49149, Oct. 24, 1983; 49 FR 11631 and 11632, Mar. 27, 1984]

§ 467.13 Effluent limitations representing the degree of effluent reduction attainable by the application of the best available technology economically achievable.

Except as provided in 40 CFR 125.30 through 125.32, any existing point source subject to this subpart must achieve the following effluent limitations representing the degree of effluent reduction attainable by the application of the best available technology economically achievable. The mass of pollutants in the core and ancillary operations' process wastewater shall not exceed the following values:

SUBPART A

Core With an Annealing Furnace Scrubber

Pollutant or pollutant property	BAT effluent limitations	
	Maximum for any 1 day	Maximum for monthly average
	mg/off-kg (lb/million off-lbs) of aluminum rolled with neat oils	
Chromium	0.036	0.015
Cyanide	0.024	0.0098
Zinc	0.119	0.050
Aluminum	0.525	0.257

SUBPART A

Core Without an Annealing Furnace Scrubber

Pollutant or pollutant property	BAT effluent limitations	
	Maximum for any 1 day	Maximum for monthly average
	mg/off-kg (lb/million off-lbs) of aluminum rolled with neat oils	
Chromium	0.025	0.010
Cyanide	0.016	0.0067
Zinc	0.081	0.034
Aluminum	0.356	0.174

SUBPART A

Continuous Sheet Casting Spent Lubricant

Pollutant or pollutant property	BAT effluent limitations	
	Maximum for any 1 day	Maximum for monthly average
	mg/off-kg (lb/million off-lbs) of aluminum sheet cast	
Chromium	0.00086	0.00035
Cyanide	0.00057	0.00024
Zinc	0.00287	0.0012
Aluminum	0.0127	0.0062

SUBPART A

Solution Heat Treatment Contact Cooling Water

Pollutant or pollutant property	BAT effluent limitations	
	Maximum for any 1 day	Maximum for monthly average
	mg/off-kg (lb/million off-lbs) of aluminum quenched	
Chromium	0.897	0.367
Cyanide	0.591	0.245
Zinc	2.974	1.243
Aluminum	13.10	6.518

SUBPART A

Cleaning or Etching Bath

Pollutant or pollutant property	BAT effluent limitations	
	Maximum for any 1 day	Maximum for monthly average
	mg/off-kg (lb/million off-lbs) of aluminum cleaned or etched	
Chromium	0.079	0.032
Cyanide	0.052	0.022
Zinc	0.262	0.109
Aluminum	1.151	0.573

SUBPART A

Cleaning or Etching Rinse

Pollutant or pollutant property	BAT effluent limitations	
	Maximum for any 1 day	Maximum for monthly average
	mg/off-kg (lb/million off-lbs) of aluminum cleaned or etched	
Chromium	0.612	0.251
Cyanide	0.404	0.167
Zinc	2.031	0.849
Aluminum	8.944	4.45

SUBPART A

Cleaning or Etching Scrubber Liquor

Pollutant or pollutant property	BAT effluent limitations	
	Maximum for any 1 day	Maximum for monthly average
	mg/off-kg (lb/million off-lbs) of aluminum cleaned or etched	
Chromium	0.851	0.348
Cyanide	0.561	0.232
Zinc	2.822	1.179
Aluminum	12.43	6.186

[48 FR 49149, Oct. 24, 1983; 49 FR 11631 and 11632, Mar. 27, 1984]

§ 467.14 New source performance standards.

Any new source subject to this subpart must achieve the following performance standards. The mass of pollutants in the core and ancillary operations' process wastewater shall not exceed the following values:

SUBPART A

Core With an Annealing Furnace Scrubber

Pollutant or pollutant property	NSPS	
	Maximum for any 1 day	Maximum for monthly average
	mg/off-kg (lb/million off-lbs) of aluminum rolled with neat oils	
Chromium	0.030	0.0123
Cyanide	0.016	0.0065
Zinc	0.084	0.0343
Aluminum	0.499	0.221
Oil and grease	0.817	0.817
Suspended solids	1.225	0.980
pH	(1)	(1)

[1] Within the range of 7.0 to 10 at all times.

SUBPART A

Core Without an Annealing Furnace Scrubber

Pollutant or pollutant property	NSPS	
	Maximum for any 1 day	Maximum for monthly average
	mg/off-kg (lb/million off-lbs) of aluminum rolled with neat oils	
Chromium	0.021	0.0083
Cyanide	0.011	0.0044
Zinc	0.057	0.023
Aluminum	0.338	0.150
Oil and grease	0.553	0.553
Suspended solids	0.830	0.664
pH	(1)	(1)

[1] Within the range of 7.0 to 10 at all times.

SUBPART A

Continuous Sheet Casting Spent Lubricant

Pollutant or pollutant property	NSPS	
	Maximum for any 1 day	Maximum for monthly average
	mg/off-kg (lb/million off-lbs) of aluminum cast	
Chromium	0.00073	0.00029
Cyanide	0.00039	0.00016
Zinc	0.0020	0.00082
Aluminum	0.012	0.0053
Oil and grease	0.0197	0.019
Suspended solids	0.0295	0.022
pH	(1)	(1)

[1] Within the range of 7.0 to 10 at all times.

SUBPART A

Solution Heat Treatment Contact Cooling Water

Pollutant or pollutant property	NSPS	
	Maximum for any 1 day	Maximum for monthly average
	mg/off-kg (lb/million off-lbs) of aluminum quenched	
Chromium	0.76	0.31
Cyanide	0.41	0.17
Zinc	2.08	0.86
Aluminum	12.45	5.52
Oil and grease	20.37	20.37
Suspended solids	30.56	24.45
pH	(1)	(1)

[1] Within the range of 7.0 to 10 at all times.

SUBPART A

Cleaning or Etching Bath

Pollutant or pollutant property	NSPS	
	Maximum for any 1 day	Maximum for monthly average
	mg/off-kg (lb/million off-lbs) of aluminum cleaned or etched	
Chromium	0.066	0.027
Cyanide	0.036	0.015
Zinc	0.183	0.075
Aluminum	1.094	0.485
Oil and grease	1.79	1.79
Suspended solids	2.69	2.15
pH	(1)	(1)

[1] Within the range of 7.0 to 10 at all times.

SUBPART A

Cleaning or Etching Rinse

Pollutant or pollutant property	NSPS	
	Maximum for any 1 day	Maximum for monthly average
	mg/off-kg (lb/million off-lbs) of aluminum cleaned or etched	
Chromium	0.52	0.21
Cyanide	0.28	0.11
Zinc	1.42	0.59
Aluminum	8.50	3.70
Oil and grease	13.91	13.91
Suspended solids	20.87	16.69
pH	(1)	(1)

[1] Within the range of 7.0 to 10 at all times.

SUBPART A

Cleaning or Etching Scrubber Liquor

Pollutant or pollutant property	NSPS	
	Maximum for any 1 day	Maximum for monthly average
	mg/off-kg (lb/million off-lbs) of aluminum cleaned or etched	
Chromium	0.715	0.29
Cyanide	0.387	0.16
Zinc	1.97	0.81
Aluminum	11.81	5.24
Oil and grease	19.33	19.33
Suspended solids	29.00	23.20
pH	(1)	(1)

[1] Within the range of 7.0 to 10 at all times.

[48 FR 49149, Oct. 24, 1983; 49 FR 11631 and 11632, Mar. 27, 1984]

§ 467.15 Pretreatment standards for existing sources.

Except as provided in 40 CFR 403.7 and 403.13, any existing source subject to this subpart which introduces pollutants into a publicly owned treatment works must comply with 40 CFR part 403 and achieve the following pretreatment standards for existing sources. The mass of wastewater pollutants in aluminum forming process wastewater introduced into a POTW shall not exceed the following values:

SUBPART A

Core With an Annealing Furnace Scrubber

Pollutant or pollutant property	PSES	
	Maximum for any 1 day	Maximum for monthly average
	mg/off-kg (lb/million off-lbs) of aluminum rolled with neat oils	
Chromium	0.036	0.015
Cyanide	0.024	0.010
Zinc	0.119	0.050
TTO	0.057	.....
Oil and grease (alternate monitoring parameter)	4.3	2.1

SUBPART A

Core Without an Annealing Furnace Scrubber

Pollutant or pollutant property	PSES	
	Maximum for any 1 day	Maximum for monthly average
	mg/off-kg (lb/million off-lbs) of aluminum rolled with neat oils	
Chromium	0.025	0.010
Cyanide	0.016	0.007
Zinc	0.081	0.034
TTO	0.038	.....
Oil and grease (alternate monitoring parameter)	2.9	1.5

SUBPART A

Continuous Sheet Casting Lubricant

Pollutant or pollutant property	PSES	
	Maximum for any 1 day	Maximum for monthly average
	mg/off-kg (lb/million off-lbs) of aluminum cast	
Chromium	0.00086	0.00035
Cyanide	0.00057	0.00024
Zinc	0.0029	0.0012
TTO	0.0014	.....
Oil and grease (alternate monitoring parameter)	0.10	0.052

SUBPART A

Solution Heat Treatment Contact Cooling Water

Pollutant or pollutant property	PSES	
	Maximum for any 1 day	Maximum for monthly average
	mg/off-kg (lb/million off-lbs) of aluminum quenched	
Chromium	0.90	0.37
Cyanide	0.59	0.25
Zinc	2.98	1.25
TTO	1.41	.....
Oil and grease (alternate monitoring parameter)	110	53

SUBPART A

Cleaning or Etching Bath

Pollutant or pollutant property	PSES	
	Maximum for any 1 day	Maximum for monthly average
	mg/off-kg (lb/million off-lbs) of aluminum cleaned or etched	
Chromium	0.079	0.032
Cyanide	0.052	0.022
Zinc	0.262	0.109
TTO	0.124	.....
Oil and grease (alternate monitoring parameter)	9.3	4.7

SUBPART A

Cleaning or Etching Rinse

Pollutant or pollutant property	PSES	
	Maximum for any 1 day	Maximum for monthly average
	mg/off-kg (lb/million off-lbs) of aluminum cleaned or etched	
Chromium	0.61	0.25
Cyanide	0.41	0.17
Zinc	2.03	0.85
TTO	0.96	.....
Oil and grease (alternate monitoring parameter)	73	36

SUBPART A

Cleaning or Etching Scrubber Liquor

Pollutant or pollutant property	PSES	
	Maximum for any 1 day	Maximum for monthly average
	mg/off-kg (lb/million off-lbs) of aluminum cleaned or etched	
Chromium	0.85	0.35
Cyanide	0.56	0.23
Zinc	2.82	1.18
TTO	1.34	.....
Oil and grease (alternate monitoring parameter)	100	50

[48 FR 49149, Oct. 24, 1983; 49 FR 11631 and 11632, Mar. 27, 1984, as amended at 53 FR 52369 and 52370, Dec. 27, 1988]

§ 467.16 Pretreatment standards for new sources.

Except as provided in 40 CFR 403.7, any new source subject to this subpart which introduces pollutants into a publicly owned treatment works must comply with 40 CFR part 403 and achieve the following pretreatment standards for new sources. The mass of wastewater pollutants in aluminum forming process wastewater introduced into a POTW shall not exceed the following values:

SUBPART A

Core With an Annealing Furnace Scrubber

Pollutant or pollutant property	PSNS	
	Maximum for any 1 day	Maximum for monthly average
	mg/off-kg (lb/million off-lbs) of aluminum rolled with neat oils	
Chromium	0.030	0.013
Cyanide	0.017	0.007
Zinc	0.084	0.035
TTO	0.057	.....
Oil and grease (alternate monitoring parameter)	0.817	0.817

SUBPART A

Core Without an Annealing Furnace Scrubber

Pollutant or pollutant property	PSNS	
	Maximum for any 1 day	Maximum for monthly average
	mg/off-kg (lb/million off-lbs) of aluminum rolled with neat oils	
Chromium	0.021	0.009
Cyanide	0.011	0.005
Zinc	0.057	0.024
TTO	0.038	.....
Oil and grease (alternate monitoring parameter)	0.54	0.54

SUBPART A

Continuous Sheet Casting Lubricant

Pollutant or pollutant property	PSNS	
	Maximum for any 1 day	Maximum for monthly average
	mg/off-kg (lb/million off-lbs) of aluminum cast	
Chromium	0.00073	0.00029
Cyanide	0.00039	0.00016
Zinc	0.0020	0.00082
TTO	0.0014	.....
Oil and grease (alternate monitoring parameter)	0.020	0.020

SUBPART A

Solution Heat Treatment Contact Cooling Water

Pollutant or pollutant property	PSNS	
	Maximum for any 1 day	Maximum for monthly average
	mg/off-kg (lb/million off-lbs) of aluminum quenched	
Chromium	0.76	0.31
Cyanide	0.41	0.17
Zinc	2.08	0.86
TTO	1.41	.....
Oil and grease (alternate monitoring parameter)	20.37	20.37

SUBPART A

Cleaning or Etching Bath

Pollutant or pollutant property	PSNS	
	Maximum for any 1 day	Maximum for monthly average
	mg/off-kg (lb/million off-lbs) of aluminum cleaned or etched	
Chromium	0.067	0.027
Cyanide	0.036	0.015
Zinc	0.183	0.075
TTO	0.124	.....
Oil and grease (alternate monitoring parameter)	1.79	1.79

SUBPART A

Cleaning or Etching Rinse

Pollutant or pollutant property	PSNS	
	Maximum for any 1 day	Maximum for monthly average
	mg/off-kg (lb/million off-lbs) of aluminum cleaned or etched	
Chromium	0.52	0.21
Cyanide	0.28	0.11
Zinc	1.42	0.59
TTO	0.96	.....
Oil and grease (alternate monitoring parameter)	13.91	13.91

SUBPART A

Cleaning or Etching Scrubber Liquor

Pollutant or pollutant property	PSNS	
	Maximum for any 1 day	Maximum for monthly average
	mg/off-kg (lb/million off-lbs) of aluminum cleaned or etched	
Chromium	0.72	0.29
Cyanide	0.39	0.16
Zinc	1.97	0.81
TTO	1.34	.....
Oil and grease (alternate monitoring parameter)	19.33	19.33

[48 FR 49149, Oct. 24, 1983; 49 FR 11631 and 11632, Mar. 27, 1984]

§ 467.17 Effluent limitations representing the degree of effluent reduction attainable by the application of the best conventional pollutant control technology. [Reserved]

Subpart B—Rolling With Emulsions Subcategory

§ 467.20 Applicability; description of the rolling with emulsions subcategory.

This subpart applies to dischargers of pollutants to waters of the United States and introductions of pollutants into publicly owned treatment works from the core and the ancillary operations of the rolling with emulsions subcategory.

§ 467.21 Specialized definitions.

For the purpose of this subpart:

(a) The ''core'' of the rolling with emulsions subcategory shall include rolling using emulsions, roll grinding, stationary casting, homogenizing, artificial aging, annealing, and sawing.

(b) The term ''ancillary operation'' shall mean any operation not previously included in the core, performed on-site, following or preceding the rolling operation. The ancillary operations shall include direct chill casting, solution heat treatment, cleaning or etching, and degassing.

§ 467.22 Effluent limitations representing the degree of effluent reduction attainable by the application of the best practicable control technology currently available.

Except as provided in 40 CFR 125.30 through 125.32, any existing point source subject to this subpart must achieve the following effluent limitations representing the degree of effluent reduction attainable by the application of the best practicable control technology currently available.

SUBPART B

Core

Pollutant or pollutant property	BPT effluent limitations	
	Maximum for any 1 day	Maximum for monthly average
	mg/off-kg (lb/million off-lbs) of aluminum rolled with emulsions	
Chromium	0.057	0.024
Cyanide	0.038	0.016
Zinc	0.19	0.079
Aluminum	0.84	0.416
Oil and grease	2.60	1.56
Suspended solids	5.33	2.53
pH	(1)	(1)

[1] Within the range of 7.0 to 10.0 at all times.

SUBPART B

Direct Chill Casting Contact Cooling Water

Pollutant or pollutant property	BPT effluent limitations	
	Maximum for any 1 day	Maximum for monthly average
	mg/off-kg (lb/million off-lbs) of aluminum cast	
Chromium	0.59	0.24
Cyanide	0.39	0.16
Zinc	1.94	0.81
Aluminum	8.55	4.26
Oil and grease	26.58	15.95
Suspended solids	54.49	25.92
pH	(1)	(1)

[1] The pH shall be maintained within the range of 7.0 to 10.0 at all times except for those situations when this waste stream is discharged separately and without commingling with any other wastewater in which case the pH shall be within the range of 6.0 to 10.0 at all times.

SUBPART B

Solution Heat Treatment Contact Cooling Water

Pollutant or pollutant property	BPT effluent limitations	
	Maximum for any 1 day	Maximum for monthly average
	mg/off-kg (lb/million off-lbs) of aluminum quenched	
Chromium	3.39	1.39
Cyanide	2.24	0.93
Zinc	11.25	4.70
Aluminum	49.55	24.66
Oil and grease	154.10	92.46
Suspended solids	315.91	150.25
pH	(1)	(1)

[1] Within the range of 7.0 to 10.0 at all times.

SUBPART B

Cleaning or Etching Bath

Pollutant or pollutant property	BPT effluent limitations	
	Maximum for any 1 day	Maximum for monthly average
	mg/off-kg (lb/million off-lbs) of aluminum cleaned or etched	
Chromium	0.079	0.032
Cyanide	0.052	0.022
Zinc	0.262	0.109
Aluminum	1.15	0.573
Oil and grease	3.58	2.15
Suspended solids	7.34	3.49
pH	(1)	(1)

[1] Within the range of 7.0 to 10.0 at all times.

SUBPART B

Cleaning or Etching Rinse

Pollutant or pollutant property	BPT effluent limitations	
	Maximum for any 1 day	Maximum for monthly average
	mg/off-kg (lb/million off-lbs) of aluminum cleaned or etched	
Chromium	6.12	2.51
Cyanide	4.04	1.67
Zinc	20.31	8.49
Aluminum	89.46	44.52
Oil and grease	278.24	166.95
Suspended solids	570.39	271.29
pH	(1)	(1)

[1] Within the range of 7.0 to 10.0 at all times.

SUBPART B

Cleaning or Etching Scrubber Liquor

Pollutant or pollutant property	BPT effluent limitations	
	Maximum for any 1 day	Maximum for monthly average
	mg/off-kg (lb/million off-lbs) of aluminum cleaned or etched	
Chromium	7.00	2.86
Cyanide	4.61	1.91
Zinc	23.22	9.70
Aluminum	102.24	50.88
Oil and grease	318.00	190.80
Suspended solids	651.90	310.05
pH	(1)	(1)

[1] Within the range of 7.0 to 10.0 at all times.

[48 FR 49149, Oct. 24, 1983; 49 FR 11631 and 11632, Mar. 27, 1984, as amended at 53 FR 52370, Dec. 27, 1988]

§ 467.23 Effluent limitations representing the degree of effluent reduction attainable by the application of the best available technology economically achievable.

Except as provided in 40 CFR 125.30 through 125.32, any existing point source subject to this subpart must achieve the following effluent limitations representing the degree of effluent reduction attainable by the application of the best available technology economically achievable. The discharge of process wastewater pollutants from the core shall not exceed the values set forth below:

SUBPART B

Core

Pollutant or pollutant property	BAT effluent limitations	
	Maximum for any 1 day	Maximum for monthly average
	mg/off-kg (lb/million off-lbs) of aluminum rolled with emulsions	
Chromium	0.057	0.024
Cyanide	0.038	0.016
Zinc	0.19	0.079
Aluminum	0.84	0.42

SUBPART B

Direct Chill Casting Contact Cooling Water

Pollutant or pollutant property	BAT effluent limitations	
	Maximum for any 1 day	Maximum for monthly average
	mg/off-kg (lb/million off-lbs) of aluminum cast	
Chromium	0.59	0.24
Cyanide	0.39	0.16
Zinc	1.94	0.81
Aluminum	8.55	4.26

SUBPART B

Solution Heat Treatment Contact Cooling Water

Pollutant or pollutant property	BAT Effluent Limitations	
	Maximum for any 1 day	Maximum for monthly average
	mg/off-kg (lb/million off-lbs) of aluminum quenched	
Chromium	0.90	0.37
Cyanide	0.59	0.25
Zinc	2.98	1.25
Aluminum	13.10	6.52

SUBPART B

Cleaning or Etching Bath

Pollutant or pollutant property	BAT effluent limitations	
	Maximum for any 1 day	Maximum for monthly average
	mg/off-kg (lb/million off-lbs) of aluminum cleaned or etched	
Chromium	0.079	0.032
Cyanide	0.052	0.022
Zinc	0.26	0.109
Aluminum	1.15	0.573

SUBPART B

Cleaning or Etching Rinse

Pollutant or pollutant property	BAT effluent limitations	
	Maximum for any 1 day	Maximum for monthly average
	mg/off-kg (lb/million off-lbs) of aluminum cleaned or etched	
Chromium	0.61	0.25
Cyanide	0.41	0.17
Zinc	2.03	0.85
Aluminum	8.95	4.45

SUBPART B

Cleaning or Etching Scrubber Liquor

Pollutant or pollutant property	BAT effluent limitations	
	Maximum for any 1 day	Maximum for monthly average
	mg/off-kg (lb/million off-lbs) of aluminum cleaned or etched	
Chromium	0.85	0.35
Cyanide	0.56	0.23
Zinc	2.82	1.18
Aluminum	12.43	6.19

[48 FR 49149, Oct. 24, 1983; 49 FR 11631 and 11633, Mar. 27, 1984]

§ 467.24 New source performance standards.

Any new source subject to this subpart must achieve the following performance standards. The discharge of process wastewater pollutants from the core shall not exceed the values set forth below:

SUBPART B

Core

Pollutant or pollutant property	NSPS	
	Maximum for any 1 day	Maximum for monthly average
	mg/off-kg (lb/million off-lbs) of aluminum rolled with emulsions	
Chromium	0.048	0.020
Cyanide	0.026	0.011
Zinc	0.133	0.055
Aluminum	0.80	0.35
Oil and grease	1.30	1.30
Suspended solids	1.95	1.56
pH	(1)	(1)

[1] Within the range of 7.0 to 10.0 at all times.

SUBPART B

Direct Chill Casting Contact Cooling Water

Pollutant or pollutant property	NSPS	
	Maximum for any 1 day	Maximum for monthly average
	mg/off-kg (lb/million off-lbs) of aluminum cast by semicontinuous methods	
Chromium	0.49	0.20
Cyanide	0.27	0.11
Zinc	1.36	0.56
Aluminum	8.12	3.60
Oil and grease	13.29	13.29
Suspended solids	19.94	15.95
pH	(1)	(1)

[1] The pH shall be maintained within the range of 7.0 to 10.0 at all times except for those situations when this waste stream is discharged separately and without commingling with any other wastewater in which case the pH shall be within the range of 6.0 to 10.0 at all times.

SUBPART B

Solution Heat Treatment Contact Cooling Water

Pollutant or pollutant property	NSPS	
	Maximum for any 1 day	Maximum for monthly average
	mg/off-kg (lb/million off-lbs) of aluminum quenched	
Chromium	0.76	0.31
Cyanide	0.41	0.17
Zinc	2.08	0.86
Aluminum	12.45	5.52
Oil and grease	20.37	20.37
Suspended solids	30.56	24.45
pH	(1)	(1)

[1] Within the range of 7.0 to 10.0 at all times.

SUBPART B

Cleaning or Etching Bath

Pollutant or pollutant property	NSPS	
	Maximum for any 1 day	Maximum for monthly average
	mg/off-kg (lb/million off-lbs) of aluminum cleaned or etched	
Chromium	0.067	0.027
Cyanide	0.036	0.015
Zinc	0.183	0.075
Aluminum	1.094	0.485
Oil and grease	1.79	1.79
Suspended solids	2.69	2.15
pH	(1)	(1)

[1] Within the range of 7.0 to 10.0 at all times.

SUBPART B

Cleaning or Etching Rinse

Pollutant or pollutant property	NSPS	
	Maximum for any 1 day	Maximum for monthly average
	mg/off-kg (lb/million off-lbs) of aluminum cleaned or etched	
Chromium	0.52	0.21
Cyanide	0.28	0.11
Zinc	1.42	0.59
Aluminum	8.50	3.77
Oil and grease	13.91	13.91
Suspended solids	20.87	16.70
pH	(1)	(1)

[1] Within the range of 7.0 to 10.0 at all times.

SUBPART B

Cleaning or Etching Scrubber Liquor

Pollutant or pollutant property	NSPS	
	Maximum for any 1 day	Maximum for monthly average
	mg/off-kg (lb/million off-lbs) of aluminum cleaned or etched	
Chromium	0.72	0.29
Cyanide	0.39	0.16
Zinc	1.97	0.81
Aluminum	11.81	5.24
Oil and grease	19.33	19.33
Suspended solids	29.00	23.20
pH	(1)	(1)

[1] Within the range of 7.0 to 10.0 at all times.

[48 FR 49149, Oct. 24, 1983; 49 FR 11631 and 11633, Mar. 27, 1984, as amended at 53 FR 52370, Dec. 27, 1988]

§ 467.25 Pretreatment standards for existing sources.

Except as provided in 40 CFR 403.7 and 403.13, any existing source subject to this subpart which introduces pollutants into a publicly owned treatment works must comply with 40 CFR part 403 and achieve the following pretreatment standards for existing sources. The mass of wastewater pollutants in aluminum forming process wastewater introduced into a POTW shall not exceed the following values:

SUBPART B

Core

Pollutant or pollutant property	PSES	
	Maximum for any 1 day	Maximum for monthly average
	mg/off-kg (lb/million off-lbs) of aluminum rolled with emulsions	
Chromium	0.057	0.024
Cyanide	0.038	0.016
Zinc	0.190	0.079
TTO	0.090	.....
Oil and grease (alternate monitoring parameter)	6.8	3.4

SUBPART B

Direct Chill Casting Contact Cooling Water

Pollutant or pollutant property	PSES	
	Maximum for any 1 day	Maximum for monthly average
	mg/off-kg (lb/million off-lbs) of aluminum cast by semi-continuous methods	
Chromium	0.59	0.24
Cyanide	0.39	0.16
Zinc	1.94	0.81
TTO	0.92	.....
Oil and grease (alternate monitoring parameter)	69	35

SUBPART B

Solution Heat Treatment Contact Cooling Water

Pollutant or pollutant property	PSES	
	Maximum for any 1 day	Maximum for monthly average
	mg/off-kg (lb/million off-lbs) of aluminum quenched	
Chromium	0.90	0.37
Cyanide	0.59	0.25
Zinc	2.98	1.25
TTO	1.41	.....
Oil and grease (alternate monitoring parameter)	110	53

SUBPART B

Cleaning or Etching Bath

Pollutant or pollutant property	PSES	
	Maximum for any 1 day	Maximum for monthly average
	mg/off-kg (lb/million off-lbs) of aluminum cleaned or etched	
Chromium	0.079	0.032
Cyanide	0.052	0.022
Zinc	0.262	0.109
TTO	0.124	.....
Oil and grease (alternate monitoring parameter)	9.3	4.7

SUBPART B

Cleaning or Etching Rinse

Pollutant or pollutant property	PSES	
	Maximum for any 1 day	Maximum for monthly average
	mg/off-kg (lb/million off-lbs) of aluminum cleaned or etched	
Chromium	0.61	0.25
Cyanide	0.41	0.17
Zinc	2.03	0.85
TTO	0.96	.....
Oil and grease (alternate monitoring parameter)	73	36

SUBPART B

Cleaning or Etching Scrubber Liquor

Pollutant or pollutant property	PSES	
	Maximum for any 1 day	Maximum for monthly average
	mg/off-kg (lb/million off-lbs) of aluminum cleaned or etched	
Chromium	0.85	0.35
Cyanide	0.56	0.23
Zinc	2.83	1.18
TTO	1.34	.....
Oil and grease (alternate monitoring parameter)	100	50

[48 FR 49149, Oct. 24, 1983; 49 FR 11631, 11632, and 11633, Mar. 27, 1984, as amended at 53 FR 52369 and 52370, Dec. 27, 1988]

§ 467.26 Pretreatment standards for new sources.

Except as provided in § 403.7, any new source subject to this subpart which introduces pollutants into a publicly owned treatment works must comply with 40 CFR part 403 and achieve the

following pretreatment standards for new sources. The mass of process wastewater pollutants from the core and ancillary operations introduced into a POTW shall not exceed the values set forth below:

SUBPART B

Core

Pollutant or pollutant property	PSNS	
	Maximum for any 1 day	Maximum for monthly average
	mg/off-kg (lb/million off-lbs) of aluminum rolled with emulsions	
Chromium	0.048	0.020
Cyanide	0.026	0.011
Zinc	0.133	0.055
TTO	0.090	.....
Oil and grease (alternate monitoring parameter)	1.30	1.30

SUBPART B

Direct Chill Casting Contact Cooling Water

Pollutant or pollutant property	PSNS	
	Maximum for any 1 day	Maximum for monthly average
	mg/off-kg (lb/million off-lbs) of aluminum cast by semicontinuous methods	
Chromium	0.49	0.20
Cyanide	0.27	0.11
Zinc	1.36	0.56
TTO	0.92	.....
Oil and grease (alternate monitoring parameter)	13.29	13.29

SUBPART B

Solution Heat Treatment Contact Cooling Water

Pollutant or pollutant property	PSNS	
	Maximum for any 1 day	Maximum for monthly average
	mg/off-kg (lb/million off-lbs) of aluminum quenched	
Chromium	0.76	0.31
Cyanide	0.41	0.17
Zinc	2.08	0.86
TTO	1.41	.....
Oil and grease (alternate monitoring parameter)	20.37	20.37

SUBPART B

Cleaning or Etching Bath

Pollutant or pollutant property	PSNS	
	Maximum for any 1 day	Maximum for monthly average
	mg/off-kg (lb/million off-lbs) of aluminum cleaned or etched	
Chromium	0.067	0.027
Cyanide	0.036	0.015
Zinc	0.183	0.075
TTO	0.124	.....
Oil and grease (alternate monitoring parameter)	1.79	1.79

SUBPART B

Cleaning or Etching Rinse

Pollutant or pollutant property	PSNS	
	Maximum for any 1 day	Maximum for monthly average
	mg/off-kg (lb/million off-lbs) of aluminum cleaned or etched	
Chromium	0.52	0.21
Cyanide	0.28	0.11
Zinc	1.42	0.59
TTO	0.96	.....
Oil and grease (alternate monitoring parameter)	13.91	13.91

SUBPART B

Cleaning or Etching Scrubber Liquor

Pollutant or pollutant property	PSNS	
	Maximum for any 1 day	Maximum for monthly average
	mg/off-kg (lb/million off-lbs) of aluminum cleaned or etched	
Chromium	0.72	0.29
Cyanide	0.39	0.16
Zinc	1.97	0.81
TTO	1.34	.....
Oil and grease (alternate monitoring parameter)	19.33	19.33

[48 FR 49149, Oct. 24, 1983; 49 FR 11631 and 11632, Mar. 27, 1984]

§ 467.27 Effluent limitations representing the degree of effluent reduction attainable by the application of the best conventional pollutant control technology. [Reserved]

Subpart C—Extrusion Subcategory

§ 467.30 Applicability; description of the extrusion subcategory.

This subpart applies to discharges of pollutants to waters of the United States and introductions of pollutants into publicly owned treatment works from the core and the ancillary operations of the extrusion subcategory.

§ 467.31 Specialized definitions.

For the purpose of this subpart:

(a) The ''core'' of the extrusion subcategory shall include extrusion die cleaning, dummy block cooling, stationary casting, artificial aging, annealing, degreasing, and sawing.

(b) The term ''extrusion die cleaning'' shall mean the process by which the steel dies used in extrusion of aluminum are cleaned. The term includes a dip into a concentrated caustic bath to dissolve the aluminum followed by a water rinse. It also includes the use of a wet scrubber with the die cleaning operation.

(c) The term ''ancillary operation'' shall mean any operation not previously included in the core, performed on-site, following or preceding the extrusion operation. The ancillary operations shall include direct chill casting, press or solution heat treatment, cleaning or etching, degassing, and extrusion press hydraulic fluid leakage.

§ 467.32 Effluent limitations representing the degree of effluent reduction attainable by the application of the best practicable control technology currently available.

Except as provided in 40 CFR 125.30 through 125.32, any existing point source subject to this subpart must achieve the following effluent limitations representing the degree of effluent reduction attainable by the application of the best practicable control technology currently available:

SUBPART C

Core

Pollutant or pollutant property	BPT effluent limitations	
	Maximum for any 1 day	Maximum for monthly average
	mg/off-kg (lb/million off-lbs) of aluminum extruded	
Chromium	0.16	0.066
Cyanide	0.11	0.044
Zinc	0.53	0.22
Aluminum	2.34	1.16
Oil and grease	7.32	4.39
Suspended solids	15.0	7.13
pH	(1)	(1)

1 Within the range of 7.0 to 10.0 at all times.

SUBPART C

Extrusion Press Leakage

Pollutant or pollutant property	BPT effluent limitations	
	Maximum for any 1 day	Maximum for monthly average
	mg/off-kg (lb/million off-lbs) of aluminum extruded	
Chromium	0.65	0.27
Cyanide	0.43	0.18
Zinc	2.16	0.90
Aluminum	9.51	4.73
Oil and grease	29.56	17.74
Suspended solids	60.60	28.82
pH	(1)	(1)

1 With the range of 7.0 to 10.0 at all times.

SUBPART C

Direct Chill Casting Contact Cooling Water

Pollutant or pollutant property	BPT effluent limitations	
	Maximum for any 1 day	Maximum for monthly average
	mg/off-kg (lb/million off-lbs) of aluminum cast	
Chromium	0.59	0.24
Cyanide	0.39	0.16
Zinc	1.94	0.81
Aluminum	8.55	4.26
Oil and grease	26.58	15.95
Suspended solids	54.49	25.92
pH	(1)	(1)

1 The pH shall be maintained within the range of 7.0 to 10.0 at all times except for those situations when this waste stream is discharged separately and without commingling with any other wastewater in which case the pH shall be within the range of 6.0 to 10.0 at all times.

SUBPART C

Press Heat Treatment Contact Cooling Water

Pollutant or pollutant property	BPT effluent limitations	
	Maximum for any 1 day	Maximum for monthly average
	mg/off-kg (lb/million off-lbs) of aluminum quenched	
Chromium	3.39	1.39
Cyanide	2.24	0.93
Zinc	11.25	4.70
Aluminum	49.55	24.66
Oil and grease	154.10	92.46
Suspended solids	315.91	150.25
pH	(1)	(1)

[1] Within the range of 7.0 to 10.0 at all times.

SUBPART C

Solution Heat Treatment Contact Cooling Water

Pollutant or pollutant property	BPT effluent limitations	
	Maximum for any 1 day	Maximum for monthly average
	mg/off-kg (lb/million off-lbs) of aluminum quenched	
Chromium	3.39	1.39
Cyanide	2.24	0.93
Zinc	11.25	4.70
Aluminum	49.55	24.66
Oil and grease	154.10	92.46
Suspended solids	315.91	150.25
pH	(1)	(1)

[1] Within the range of 7.0 to 10.0 at all times.

SUBPART C

Cleaning or Etching Bath

Pollutant or pollutant property	BPT effluent limitations	
	Maximum for any 1 day	Maximum for monthly average
	mg/off-kg (lb/million off-lbs) of aluminum cleaned or etched	
Chromium	0.079	0.032
Cyanide	0.052	0.022
Zinc	0.26	0.109
Aluminum	1.15	0.573
Oil and grease	3.58	2.15
Suspended solids	7.34	3.49
pH	(1)	(1)

[1] Within the range of 7.0 to 10.0 at all times.

SUBPART C

Cleaning or Etching Rinse

Pollutant or pollutant property	BPT effluent limitations	
	Maximum for any 1 day	Maximum for monthly average
	mg/off-kg (lb/million off-lbs) of aluminum cleaned or etched	
Chromium	6.12	2.51
Cyanide	4.04	1.67
Zinc	20.31	8.49
Aluminum	89.46	44.52
Oil and grease	278.24	166.95
Suspended solids	570.39	271.29
pH	(1)	(1)

[1] Within the range of 7.0 to 10.0 at all times.

SUBPART C

Cleaning or Etching Scrubber Liquor

Pollutant or pollutant property	BPT effluent limitations	
	Maximum for any 1 day	Maximum for monthly average
	mg/off-kg (lb/million off-lbs) of aluminum cleaned or etched	
Chromium	7.00	2.86
Cyanide	4.61	1.91
Zinc	23.22	9.70
Aluminum	102.24	50.88
Oil and grease	318.00	190.80
Suspended solids	651.90	310.05
pH	(1)	(1)

[1] Within the range of 7.0 to 10.0 at all times.

SUBPART C

Degassing Scrubber Liquor

Pollutant or pollutant property	BPT effluent limitations	
	Maximum for any 1 day	Maximum for monthly average
	mg/off-kg (lb/million off-lbs) of aluminum degassed	
Chromium	1.15	0.47
Cyanide	0.76	0.32
Zinc	3.81	1.59
Aluminum	16.78	8.35
Oil and grease	52.18	31.31
Suspended solids	106.97	50.88
pH	(1)	(1)

[1] Within the range of 7.0 to 10.0 at all times.

[48 FR 49149, Oct. 24, 1983; 49 FR 11631 and 11633, Mar. 27, 1984, as amended at 53 FR 52370, Dec. 27, 1988]

§ 467.33 Effluent limitations representing the degree of effluent reduction attainable by the application of the best available technology economically achievable.

(a) Except as provided in 40 CFR 125.30 through 125.32, any existing point source subject to this subpart must achieve the following effluent limitations representing the degree of effluent reduction attainable by the application of the best available technology economically achievable:

(b) There shall be no discharge allowance for wastewater pollutants from the degassing operation.

(c) The discharge of wastewater pollutants from the core and ancillary operation except those in (b) of this section, shall not exceed the values set forth below:

SUBPART C

Core

Pollutant or pollutant property	BAT effluent limitations	
	Maximum for any 1 day	Maximum for monthly average
	mg/off-kg (lb/million off-lbs) of aluminum extruded	
Chromium	0.15	0.061
Cyanide	0.098	0.041
Zinc	0.49	0.21
Aluminum	2.19	1.09

SUBPART C

Extrusion Press Leakage

Pollutant or pollutant property	BAT effluent limitations	
	Maximum for any 1 day	Maximum for monthly average
	mg/off-kg (lb/million off-lbs) of aluminum extruded	
Chromium	0.65	0.27
Cyanide	0.43	0.18
Zinc	2.16	0.90
Aluminum	9.51	4.73

SUBPART C

Direct Chill Casting Contact Cooling Water

Pollutant or pollutant property	BAT effluent limitations	
	Maximum for any 1 day	Maximum for monthly average
	mg/off-kg (lb/million off-lbs) of aluminum cast	
Chromium	0.59	0.24
Cyanide	0.39	0.16
Zinc	1.94	0.81
Aluminum	8.55	4.26

SUBPART C

Press Heat Treatment Contact Cooling Water

Pollutant or pollutant property	BAT effluent limitations	
	Maximum for any 1 day	Maximum for monthly average
	mg/off-kg (lb/million off-lbs) of aluminum quenched	
Chromium	0.90	0.37
Cyanide	0.59	0.25
Zinc	2.98	1.25
Aluminum	13.10	6.52

SUBPART C

Solution Heat Treatment Contact Cooling Water

Pollutant or pollutant property	BAT effluent limitations	
	Maximum for any 1 day	Maximum for monthly average
	mg/off-kg (lb/million off-lbs) of aluminum quenched	
Chromium	0.90	0.37
Cyanide	0.59	0.25
Zinc	2.98	1.25
Aluminum	13.10	6.52

SUBPART C

Cleaning or Etching Bath

Pollutant or pollutant property	BAT effluent limitations	
	Maximum for any 1 day	Maximum for monthly average
	mg/off-kg (lb/million off-lbs) of aluminum cleaned or etched	
Chromium	0.079	0.032
Cyanide	0.052	0.022
Zinc	0.262	0.109
Aluminum	1.15	0.58

SUBPART C

Cleaning or Etching Rinse

Pollutant or pollutant property	BAT effluent limitations	
	Maximum for any 1 day	Maximum for monthly average
	mg/off-kg (lb/million off-lbs) of aluminum cleaned or etched	
Chromium	1.7	0.7
Cyanide	1.2	0.5
Zinc	5.7	2.4
Aluminum	25	13

SUBPART C

Cleaning or Etching Scrubber Liquor

Pollutant or pollutant property	BAT effluent limitations	
	Maximum for any 1 day	Maximum for monthly average
	mg/off-kg (lb/million off-lbs) of aluminum cleaned or etched	
Chromium	0.85	0.35
Cyanide	0.56	0.23
Zinc	2.82	1.18
Aluminum	12.43	6.19

[48 FR 49149, Oct. 24, 1983; 49 FR 11631, 11633, and 11634, Mar. 27, 1984, as amended at 53 FR 52370, Dec. 27, 1988]

§ 467.34 New source performance standards.

Any new source subject to this subpart must achieve the following performance standards.

(a) There shall be no discharge allowance for wastewater pollutants from the degassing operation.

(b) The discharge of wastewater pollutants from the core and ancillary operations except those listed in paragraph (a) shall not exceed the values set forth below:

SUBPART C

Core

Pollutant or pollutant property	NSPS	
	Maximum for any 1 day	Maximum for monthly average
	mg/off-kg (lb/million off-lbs) of aluminum extruded	
Chromium	0.13	0.051
Cyanide	0.068	0.027
Zinc	0.35	0.14
Aluminum	2.07	0.92
Oil and grease	3.39	3.39
Suspended solids	5.10	4.07
pH	(1)	(1)

[1] Within the range of 7.0 to 10.0 at all times.

SUBPART C

Extrusion Press Leakage

Pollutant or pollutant property	NSPS	
	Maximum for any 1 day	Maximum for monthly average
	mg/off-kg (lb/million off-lbs) of aluminum extruded	
Chromium	0.11	0.045
Cyanide	0.060	0.024
Zinc	0.31	0.126
Aluminum	1.82	0.81
Oil and grease	2.98	2.98
Suspended solids	4.47	3.58
pH	(1)	(1)

[1] Within the range of 7.0 to 10.0 at all times.

SUBPART C

Direct Chill Casting Contact Cooling Water

Pollutant or pollutant property	NSPS	
	Maximum for any 1 day	Maximum for monthly average
	mg/off-kg (lb/million off-lbs) of aluminum cast by semicontinuous methods	
Chromium	0.49	0.20
Cyanide	0.27	0.11
Zinc	1.36	0.56
Aluminum	8.12	3.60
Oil and grease	13.29	13.29
Suspended solids	19.94	15.95
pH	(1)	(1)

1 The pH shall be maintained within the range of 7.0 to 10.0 at all times except for those situations when this waste stream is discharged separately and without commingling with any other wastewater in which case the pH shall be within the range of 6.0 to 10.0 at all times.

SUBPART C

Press Heat Treatment Contact Cooling Water

Pollutant or pollutant property	NSPS	
	Maximum for any 1 day	Maximum for monthly average
	mg/off-kg (lb/million off-lbs) of aluminum quenched	
Chromium	0.76	0.31
Cyanide	0.41	0.17
Zinc	2.08	0.86
Aluminum	12.45	5.52
Oil and grease	20.37	20.37
Suspended solids	30.56	24.45
pH	(1)	(1)

1 Within the range of 7.0 to 10.0 at all times.

SUBPART C

Solution Heat Treatment Contact Cooling Water

Pollutant or pollutant property	NSPS	
	Maximum for any 1 day	Maximum for monthly average
	mg/off-kg (lb/million off-lbs) of aluminum quenched	
Chromium	0.76	0.31
Cyanide	0.41	0.17
Zinc	2.08	0.86
Aluminum	12.45	5.52
Oil and grease	20.37	20.37
Suspended solids	30.56	24.45
pH	(1)	(1)

1 Within the range of 7.0 to 10.0 at all times.

SUBPART C

Cleaning or Etching Bath

Pollutant or pollutant property	NSPS	
	Maximum for any 1 day	Maximum for monthly average
	mg/off-kg (lb/million off-lbs) of aluminum cleaned or etched	
Chromium	0.067	0.027
Cyanide	0.036	0.015
Zinc	0.183	0.075
Aluminum	1.094	0.485
Oil and grease	1.79	1.79
Suspended solids	2.69	2.15
pH	(1)	(1)

1 Within the range of 7.0 to 10.0 at all times.

SUBPART C

Cleaning or Etching Rinse

Pollutant or pollutant property	NSPS	
	Maximum for any 1 day	Maximum for monthly average
	mg/off-kg (lb/million off-lbs) of aluminum cleaned or etched	
Chromium	0.52	0.21
Cyanide	0.28	0.11
Zinc	1.42	0.59
Aluminum	8.50	3.77
Oil and grease	13.91	13.91
Suspended solids	20.87	16.70
pH	(1)	(1)

1 Within the range of 7.0 to 10.0 at all times.

SUBPART C

Cleaning or Etching Scrubber Liquor

Pollutant or pollutant property	NSPS	
	Maximum for any 1 day	Maximum for monthly average
	mg/off-kg (lb/million off-lbs) of aluminum cleaned or etched	
Chromium	0.72	0.29
Cyanide	0.39	0.16
Zinc	1.97	0.81
Aluminum	11.81	5.24
Oil and grease	19.33	19.33
Suspended solids	29.00	23.20
pH	(1)	(1)

1 Within the range of 7.0 to 10.0 at all times.

[48 FR 49149, Oct. 24, 1983; 49 FR 11633 and 11634, Mar. 27, 1984, as amended at 53 FR 52370, Dec. 27, 1988]

§ 467.35 Pretreatment standards for existing sources.

(a) Except as provided in 40 CFR 403.7 and 403.13, any existing source subject to this subpart which introduces pollutants into a publicly owned treatment works must comply with 40 CFR part 403 and achieve the following pretreatment standards for existing sources.

(b) There shall be no discharge allowance for wastewater pollutants from the degassing operation.

(c) The mass of wastewater pollutants from the core and ancillary operations except those identified in paragraph (b), introduced into a POTW shall not exceed the following values:

SUBPART C

Core

Pollutant or pollutant property	PSES	
	Maximum for any 1 day	Maximum for monthly average
	mg/off-kg (lb/million off-lbs) of extruded	
Chromium	0.15	0.061
Cyanide	0.098	0.041
Zinc	0.49	0.21
TTO	0.23	.....
Oil and grease (alternate monitoring parameter)	18	8.8

SUBPART C

Extrusion Press Leakage

Pollutant or pollutant property	PSES	
	Maximum for any 1 day	Maximum for monthly average
	mg/off-kg (lb/million off-lbs) of extruded	
Chromium	0.65	0.27
Cyanide	0.43	0.18
Zinc	2.16	0.90
TTO	1.02	.....
Oil and grease (alternate monitoring parameter)	77	39

SUBPART C

Direct Chill Casting Contact Cooling Water

Pollutant or pollutant property	PSES	
	Maximum for any 1 day	Maximum for monthly average
	mg/off-kg (lb/million off-lbs) of aluminum cast	
Chromium	0.59	0.24
Cyanide	0.39	0.16
Zinc	1.94	0.81
TTO	0.92	.....
Oil and grease (alternate monitoring parameter)	69	35

SUBPART C

Press Heat Treatment Contact Cooling Water

Pollutant or pollutant property	PSES	
	Maximum for any 1 day	Maximum for monthly average
	mg/off-kg (lb/million off-lbs) of aluminum quenched	
Chromium	0.90	0.37
Cyanide	0.59	0.25
Zinc	2.98	1.25
TTO	1.41	.....
Oil and grease (alternate monitoring parameter)	110	53

SUBPART C

Solution Heat Treatment Contact Cooling Water

Pollutant or pollutant property	PSES	
	Maximum for any 1 day	Maximum for monthly average
	mg/off-kg (lb/million off-lbs) of aluminum quenched	
Chromium	0.90	0.37
Cyanide	0.59	0.25
Zinc	2.98	1.25
TTO	1.41	.....
Oil and grease (alternate monitoring parameter)	110	53

SUBPART C

Cleaning or Etching Bath

Pollutant or pollutant property	PSES	
	Maximum for any 1 day	Maximum for monthly average
	mg/off-kg (lb/million off-lbs) of aluminum cleaned or etched	
Chromium	0.079	0.032
Cyanide	0.052	0.022
Zinc	0.26	0.109
TTO	0.124	.....
Oil and grease (alternate monitoring parameter)	9.3	4.7

SUBPART C

Cleaning or Etching Rinse

Pollutant or pollutant property	PSES	
	Maximum for any 1 day	Maximum for monthly average
	mg/off-kg (lb/million off-lbs) of aluminum cleaned or etched	
Chromium	1.7	0.7
Cyanide	1.2	0.5
Zinc	5.7	2.4
TTO	2.7	.....
Oil & Grease (alternate monitoring parameter)	200	100

SUBPART C

Cleaning or Etching Scrubber Liquor

Pollutant or pollutant property	PSES	
	Maximum for any 1 day	Maximum for monthly average
	mg/off-kg (lb/million off-lbs) of aluminum cleaned or etched	
Chromium	0.85	0.35
Cyanide	0.56	0.23
Zinc	2.82	1.18
TTO	1.34	.....
Oil and grease (alternate monitoring parameter)	100	50

[48 FR 49149, Oct. 24, 1983; 49 FR 11632, 11633 and 11634, Mar. 27, 1984, as amended at 53 FR 52369–52371, Dec. 27, 1988]

§ 467.36 Pretreatment standards for new sources.

(a) Except as provided in 40 CFR 403.7, any new source subject to this subpart which introduces pollutants into a publicly owned treatment works must comply with 40 CFR part 403 and achieve the following pretreatment standards for new sources.

(b) There shall be no discharge allowance for wastewater pollutants from the degassing operation.

(c) The mass of wastewater pollutants from the core and ancillary operations except those identified in paragraph (b) introduced into a POTW shall not exceed the values set forth below:

SUBPART C

Core

Pollutant or pollutant property	PSNS	
	Maximum for any 1 day	Maximum for monthly average
	mg/off-kg (lb/million off-lbs) of extruded	
Chromium	0.13	0.05
Cyanide	0.07	0.03
Zinc	0.35	0.15
TTO	0.24	.....
Oil and grease (alternate monitoring parameter)	3.40	3.40

SUBPART C

Extrusion Press Leakage

Pollutant or pollutant property	PSNS	
	Maximum for any 1 day	Maximum for monthly average
	mg/off-kg (lb/million off-lbs) of hard alloy aluminum extruded	
Chromium	0.11	0.05
Cyanide	0.06	0.03
Zinc	0.31	0.13
TTO	0.21	.....
Oil and grease (alternate monitoring parameter)	2.98	2.98

SUBPART C

Direct Chill Casting Contact Cooling Water

Pollutant or pollutant property	PSNS	
	Maximum for any 1 day	Maximum for monthly average
	mg/off-kg (lb/million off-lbs) of aluminum cast	
Chromium	0.49	0.20
Cyanide	0.27	0.11
Zinc	1.36	0.56
TTO	0.92	.....
Oil and grease (alternate monitoring parameter)	13.29	13.29

SUBPART C

Press Heat Treatment Contact Cooling Water

Pollutant or pollutant property	PSNS	
	Maximum for any 1 day	Maximum for monthly average
	mg/off-kg (lb/million off-lbs) of aluminum quenched	
Chromium	0.76	0.31
Cyanide	0.41	0.17
Zinc	2.08	0.86
TTO	1.41	.....
Oil and grease (alternate monitoring parameter)	20.37	20.37

SUBPART C

Solution Heat Treatment Contact Cooling Water

Pollutant or pollutant property	PSNS	
	Maximum for any 1 day	Maximum for monthly average
	mg/off-kg (lb/million-off-lbs) of aluminum quenched	
Chromium	0.76	0.31
Cyanide	0.41	0.17
Zinc	2.08	0.86
TTO	1.41	.....
Oil and grease (alternate monitoring parameter)	20.37	20.37

SUBPART C

Cleaning or Etching Bath

Pollutant or pollutant property	PSNS	
	Maximum for any 1 day	Maximum for monthly average
	mg/off-kg (lb/million-off-lbs) of aluminum cleaned or etched	
Chromium	0.067	0.027
Cyanide	0.036	0.015
Zinc	0.183	0.075
TTO	0.124	.....
Oil and grease (alternate monitoring parameter)	1.79	1.79

SUBPART C

Cleaning or Etching Rinse

Pollutant or pollutant property	PSNS	
	Maximum for any 1 day	Maximum for monthly average
	mg/off-kg (lb/million-off-lbs) of aluminum cleaned or etched	
Chromium	0.52	0.21
Cyanide	0.28	0.11
Zinc	1.42	0.59
TTO	0.96	.....
Oil and grease (alternate monitoring parameter)	13.91	13.91

SUBPART C

Cleaning or Etching Scrubber Liquor

Pollutant or pollutant property	PSNS	
	Maximum for any 1 day	Maximum for monthly average
	mg/off-kg (lb/million-off-lbs) of aluminum cleaned or etched	
Chromium	0.72	0.29
Cyanide	0.39	0.16
Zinc	1.97	0.81
TTO	1.34	.....
Oil and grease (alternate monitoring parameter)	19.33	19.33

[48 FR 49149, Oct. 24, 1983; 49 FR 11632, 11633, and 11634, Mar. 27, 1984]

§ 467.37 Effluent limitations representing the degree of effluent reduction attainable by the application of the best conventional pollutant control technology. [Reserved]

Subpart D—Forging Subcategory

§ 467.40 Applicability; description of the forging subcategory.

This subpart applies to discharges of pollutants to waters of the United States and introductions of pollutants into publicly owned treatment works from the core of the forging subcategory and the ancillary operations.

§ 467.41 Specialized definitions.

For the purpose of this subpart:

(a) The ''core'' of the forging subcategory shall include forging, artificial aging, annealing, degreasing, and sawing.

(b) The term ''ancillary operation'' shall mean any operation not previously included in the core, performed on-site, following or preceding the forging operation. The ancillary operations shall include forging air pollution scrubbers, solution heat treatment, and cleaning or etching.

§ 467.42 Effluent limitations representing the degree of effluent reduction attainable by the application of the best practicable control technology currently available. [Reserved]

§ 467.43 Effluent limitations representing the degree of effluent reduction attainable by the application of the best available technology economically achievable. [Reserved]

§ 467.44 New source performance standards.

Any new source subject to this subpart must achieve the following performance standards. The discharge of wastewater pollutants from the core shall not exceed the values set forth below:

SUBPART D

Core

Pollutant or pollutant property	NSPS	
	Maximum for any 1 day	Maximum for monthly average
	mg/off-kg (lb/million off-lbs) of aluminum forged	
Chromium	0.019	0.008
Cyanide	0.010	0.004
Zinc	0.051	0.021
Aluminum	0.305	0.135
Oil and grease	0.50	0.50
Suspended solids	0.75	0.60
pH	(1)	(1)

[1] Within the range of 7.0 to 10 at all times.

SUBPART D

Forging Scrubber Liquor

Pollutant or pollutant property	NSPS	
	Maximum for any 1 day	Maximum for monthly average
	mg/off-kg (lb/million off-lbs) of aluminum forged	
Chromium	0.035	0.014
Cyanide	0.019	0.008
Zinc	0.096	0.04
Aluminum	0.576	0.256
Oil and grease	0.943	0.95
Suspended solids	1.42	1.13
pH	(1)	(1)

[1] Within the range of 7.0 to 10 at all times.

SUBPART D

Solution Heat Treatment Contact Cooling Water

Pollutant or pollutant property	NSPS	
	Maximum for any 1 day	Maximum for monthly average
	mg/off-kg (lb/million off-lbs) of aluminum quenched	
Chromium	0.76	0.31
Cyanide	0.41	0.163
Zinc	2.08	0.86
Aluminum	12.45	5.52
Oil and grease	20.37	20.37
Suspended solids	30.56	24.45
pH	(1)	(1)

[1] Within the range of 7.0 to 10 at all times.

SUBPART D

Cleaning or Etching Bath

Pollutant or pollutant property	NSPS	
	Maximum for any 1 day	Maximum for monthly average
	mg/off-kg (lb/million off-lbs) of aluminum cleaned or etched	
Chromium	0.066	0.027
Cyanide	0.036	0.015
Zinc	0.183	0.075
Aluminum	1.094	0.485
Oil and grease	1.79	1.79
Suspended solids	2.69	2.15
pH	(1)	(1)

[1] Within the range of 7.0 to 10 at all times.

SUBPART D

Cleaning or Etching Rinse

Pollutant or pollutant property	NSPS	
	Maximum for any 1 day	Maximum for monthly average
	mg/off-kg (lb/million off-lbs) of aluminum cleaned or etched	
Chromium	0.52	0.21
Cyanide	0.28	0.11
Zinc	1.42	0.59
Aluminum	8.5	3.77
Oil and grease	13.91	13.91
Suspended solids	20.87	16.69
pH	(1)	(1)

1 Within the range of 7.0 to 10 at all times.

SUBPART D

Cleaning or Etching Scrubber Liquor

Pollutant or pollutant property	NSPS	
	Maximum for any 1 day	Maximum for monthly average
	mg/off-kg (lb/million off-lbs) of aluminum cleaned or etched	
Chromium	0.72	0.29
Cyanide	0.39	0.155
Zinc	1.97	0.812
Aluminum	11.81	5.24
Oil and grease	19.33	19.33
Suspended solids	29.00	23.20
pH	(1)	(1)

1 Within the range of 7.0 to 10 at all times.

[48 FR 49149, Oct. 24, 1983; 49 FR 11633 and 11635, Mar. 27, 1984]

§ 467.45 Pretreatment standards for existing sources.

Except as provided in 40 CFR 403.7 and 403.13, any existing source subject to this subpart which introduced pollutants into a publicly owned treatment works must comply with 40 CFR part 403 and achieve the following pretreatment standards for existing sources. The mass of wastewater pollutants in aluminum forming process wastewater introduced into a POTW shall not exceed the values set forth below:

SUBPART D

Core

Pollutant or pollutant property	PSES	
	Maximum for any 1 day	Maximum for monthly average
	mg/off-kg (lb/million off-lbs) of aluminum forged	
Chromium	0.022	0.009
Cyanide	0.015	0.006
Zinc	0.073	0.031
TTO	0.035	.....
Oil and grease (alternate monitoring parameter)	2.6	1.3

SUBPART D

Forging Scrubber Liquor

Pollutant or pollutant property	PSES	
	Maximum for any 1 day	Maximum for monthly average
	mg/off-kg (lb/million off-lbs) of aluminum forged	
Chromium	0.042	0.017
Cyanide	0.028	0.011
Zinc	0.14	0.058
TTO	0.065	.....
Oil and grease (alternate monitoring parameter)	4.9	2.5

SUBPART D

Solution Heat Treatment Contact Cooling Water

Pollutant or pollutant property	PSES	
	Maximum for any 1 day	Maximum for monthly average
	mg/off-kg (lb/million off-lbs) of aluminum quenched	
Chromium	0.897	0.37
Cyanide	0.591	0.25
Zinc	2.98	1.24
TTO	1.41	.....
Oil and grease (alternate monitoring parameter)	110	53

SUBPART D

Cleaning or Etching Bath

Pollutant or pollutant property	PSES	
	Maximum for any 1 day	Maximum for monthly average
	mg/off-kg (lb/million off-lbs) of aluminum cleaned or etched	
Chromium	0.079	0.032
Cyanide	0.052	0.022
Zinc	0.26	0.11
TTO	0.123	.....
Oil and grease (alternate monitoring parameter)	9.3	4.7

SUBPART D

Cleaning or Etching Rinse

Pollutant or pollutant property	PSES	
	Maximum for any 1 day	Maximum for monthly average
	mb/off-kg (lb/million off-lbs) of aluminum cleaned or etched	
Chromium	1.7	0.7
Cyanide	1.2	0.5
Zinc	5.7	2.4
TTO	2.7	.....
Oil and grease (alternate monitoring parameter)	200	100

SUBPART D

Cleaning or Etching Scrubber Liquor

Pollutant or pollutant property	PSES	
	Maximum for any 1 day	Maximum for monthly average
	mg/off-kg (lb/million off-lbs) of aluminum cleaned or etched	
Chromium	0.851	0.35
Cyanide	0.561	0.23
Zinc	2.82	1.18
TTO	1.34	.....
Oil and grease (alternate monitoring parameter)	100	50

[48 FR 49149, Oct. 24, 1983; 49 FR 11632, 11633, and 11635, Mar. 27, 1984, as amended at 53 FR 52369–52371, Dec. 27, 1988]

§ 467.46 Pretreatment standards for new sources.

Except as provided in 40 CFR 403.7, any new source subject to this subpart which introduces pollutants into a publicly owned treatment works must comply with 40 CFR part 403 and achieve the following pretreatment standards for new sources. The mass of wastewater pollutants in aluminum forming process wastewater introduced into a POTW shall not exceed the values set forth below:

SUBPART D

Core

Pollutant or pollutant property	PSNS	
	Maximum for any 1 day	Maximum for monthly average
	mg/off-kg (lb/million off-lbs) of aluminum forged	
Chromium	0.019	0.008
Cyanide	0.010	0.004
Zinc	0.051	0.021
TTO	0.035	.....
Oil and grease (alternate monitoring parameter)	0.50	0.50

SUBPART D

Forging Scrubber Liquor

Pollutant or pollutant property	PSNS	
	Maximum for any 1 day	Maximum for monthly average
	mg/off-kg (lb/million off-lbs) of aluminum forged	
Chromium	0.035	0.014
Cyanide	0.019	0.008
Zinc	0.096	0.040
TTO	0.065	.....
Oil and grease (alternate monitoring parameter)	0.95	0.95

SUBPART D

Solution Heat Treatment Contact Cooling Water

Pollutant or pollutant property	PSNS	
	Maximum for any 1 day	Maximum for monthly average
	mg/off-kg (lb/million off-lbs) of aluminum quenched	
Chromium	0.76	0.31
Cyanide	0.41	0.16
Zinc	2.08	0.86
TTO	1.41	.....
Oil and grease (alternate monitoring parameter)	20.37	20.37

SUBPART D

Cleaning or Etching Bath

Pollutant or pollutant property	PSNS	
	Maximum for any 1 day	Maximum for monthly average
	mg/off-kg (lb/million off-lbs) of aluminum cleaned or etched	
Chromium	0.067	0.027
Cyanide	0.036	0.015
Zinc	0.183	0.075
TTO	0.124	.....
Oil and grease (alternate monitoring parameter)	1.79	1.79

SUBPART D

Cleaning or Etching Rinse

Pollutant or pollutant property	PSNS	
	Maximum for any 1 day	Maximum for monthly average
	mg/off-kg (lb/million off-lbs) of aluminum cleaned or etched	
Chromium	0.52	0.21
Cyanide	0.28	0.11
Zinc	1.42	0.59
TTO	0.96	.....
Oil and grease (alternate monitoring parameter)	13.91	13.91

SUBPART D

Cleaning or Etching Scrubber Liquor

Pollutant or pollutant property	PSNS	
	Maximum for any 1 day	Maximum for monthly average
	mg/off-kg (lb/million off-lbs) of aluminum cleaned or etched	
Chromium	0.72	0.29
Cyanide	0.39	0.16
Zinc	1.97	0.812
TTO	1.34	.....
Oil and grease (alternate monitoring parameter)	19.33	19.33

[48 FR 49149, Oct. 24, 1983; 49 FR 11632 and 11633, Mar. 27, 1984]

§ 467.47 Effluent limitations representing the degree of effluent reduction attainable by the application of the best conventional pollutant control technology. [Reserved]

Subpart E—Drawing With Neat Oils Subcategory

§ 467.50 Applicability; description of the drawing with neat oils subcategory.

This subpart applies to discharges of pollutants to waters of the United States and introductions of pollutants into publicly owned treatment works from the core of the drawing with neat oils subcategory and the ancillary operations.

§ 467.51 Specialized definitions.

For the purpose of this subpart:

(a) The ''core'' of the drawing with neat oils subcategory shall include drawing using neat oils, stationary casting, artificial aging, annealing, degreasing, sawing, and swaging.

(b) The term ''ancillary operation'' shall mean any operation not previously included in the core, performed on-site, following or preceding the drawing operation. The ancillary operation shall include continuous rod casting, solution heat treatment, and cleaning or etching.

§ 467.52 Effluent limitations representing the degree of effluent reduction attainable by the application of best practicable control technology currently available.

Except as provided in 40 CFR 125.30 through 125.32, any existing point source subject to this subpart must achieve the following effluent limitations representing the degree of effluent reduction attainable by the application of the best practicable technology currently available:

SUBPART E

Core

Pollutant or pollutant property	BPT effluent limitations	
	Maximum for any 1 day	Maximum for monthly average
	mg/off-kg (lb/per million off-lbs) of aluminum drawn with neat oils	
Chromium	0.022	0.0090
Cyanide	0.015	0.0050
Zinc	0.073	0.031
Aluminum	0.32	0.160
Oil and grease	0.97	0.598
Suspended solids	2.04	0.972
pH	(1)	(1)

1 Within the range of 7.0 to 10 at all times.

SUBPART E

Continuous Rod Casting Spent Lubricant

Pollutant or pollutant property	BPT effluent limitations	
	Maximum for any 1 day	Maximum for monthly average
	mg/off-kg (lb/million off-lbs) of aluminum rod cast	
Chromium	0.00086	0.00035
Cyanide	0.00057	0.00024
Zinc	0.00287	0.0012
Aluminum	0.0127	0.0063
Oil and grease	0.0393	0.0236
Suspended solids	0.0805	0.0383
pH	(1)	(1)

1 Within the range of 7.0 to 10.0 at all times.

SUBPART E

Continuous Rod Casting Contact Cooling Water

Pollutant or pollutant property	BPT effluent limitations	
	Maximum for any 1 day	Maximum for monthly average
	mg/off-kg (lb/million off-lbs) of aluminum rod cast	
Chromium	0.684	0.28
Cyanide	0.451	0.187
Zinc	2.271	0.949
Aluminum	10.00	4.976
Oil and grease	31.10	18.66
Suspended solids	63.76	30.322
pH	(1)	(1)

1 Within the range of 7.0 to 10 at all times.

SUBPART E

Solution Heat Treatment Contact Cooling Water

Pollutant or pollutant property	BPT effluent limitations	
	Maximum for any 1 day	Maximum for monthly average
	mg/off-kg (lb/million off-lbs) of aluminum quenched	
Chromium	3.39	1.39
Cyanide	2.24	0.93
Zinc	11.25	4.70
Aluminum	49.55	24.66
Oil and grease	154.10	92.46
Suspended solids	315.91	150.25
pH	(1)	(1)

1 Within the range of 7.0 to 10 at all times.

SUBPART E

Cleaning or Etching Bath

Pollutant or pollutant property	BPT effluent limitations	
	Maximum for any 1 day	Maximum for monthly average
	mg/off-kg (lb/million off-lbs) of aluminum cleaned or etched	
Chromium	0.079	0.032
Cyanide	0.052	0.022
Zinc	0.26	0.11
Aluminum	1.150	0.57
Oil and grease	3.58	2.15
Suspended solids	7.34	3.49
pH	(1)	(1)

1 Within the range of 7.0 to 10 at all times.

SUBPART E

Cleaning or Etching Rinse

Pollutant or pollutant property	BPT effluent limitations	
	Maximum for any 1 day	Maximum for monthly average
	mg/off-kg (lb/million off-lbs) of aluminum cleaned or etched	
Chromium	6.12	2.51
Cyanide	4.04	1.67
Zinc	20.31	8.49
Aluminum	89.46	44.52
Oil and grease	278.24	166.95
Suspended solids	570.39	271.29
pH	(1)	(1)

1 Within the range of 7.0 to 10 at all times.

SUBPART E

Cleaning or Etching Scrubber Liquor

Pollutant or pollutant property	BPT effluent limitations	
	Maximum for any 1 day	Maximum for monthly average
	mg/off-kg (lb/million off-lbs) of aluminum cleaned or etched	
Chromium	7.00	2.86
Cyanide	4.61	1.91
Zinc	23.22	9.70
Aluminum	102.24	50.88
Oil and grease	318.00	190.8
Suspended solids	651.90	310.05
pH	(1)	(1)

[1] Within the range of 7.0 to 10 at all times.

[48 FR 49149, Oct. 24, 1983; 49 FR 11633 and 11635, Mar. 27, 1984]

§ 467.53 Effluent limitations representing the degree of effluent reduction attainable by the application of the best available technology economically achievable.

Except as provided in 40 CFR 125.30 through 125.32, any existing point source subject to this subpart must achieve the following effluent limitations representing the degree of effluent reduction attainable by the application of the best available technology economically achievable. The discharge of wastewater pollutants from the core and ancillary operations shall not exceed the values set forth below:

SUBPART E

Core

Pollutant or pollutant property	BAT effluent limitations	
	Maximum for any 1 day	Maximum for monthly average
	mg/off-kg (lb/million off-lbs) of aluminum drawn with neat oils	
Chromium	0.022	0.009
Cyanide	0.015	0.006
Zinc	0.073	0.031
Aluminum	0.321	0.16

SUBPART E

Continuous Rod Casting Spent Lubricant

Pollutant or pollutant property	BAT effluent limitations	
	Maximum for any 1 day	Maximum for monthly average
	mg/off-kg (lb/million off-lbs) of aluminum rod cast	
Chromium	0.00086	0.0004
Cyanide	0.0006	0.0002
Zinc	0.0029	0.0012
Aluminum	0.0127	0.0063

SUBPART E

Continuous Rod Casting Contact Cooling Water

Pollutant or pollutant property	BAT effluent limitations	
	Maximum for any 1 day	Maximum for monthly average
	mg/off-kg (lb/million off-lbs) of aluminum rod cast	
Chromium	0.086	0.035
Cyanide	0.056	0.024
Zinc	0.283	0.118
Aluminum	1.247	0.621

SUBPART E

Solution Heat Treatment Contact Cooling Water

Pollutant or pollutant property	BAT effluent limitations	
	Maximum for any 1 day	Maximum for monthly average
	mg/off-kg (lb/million off-lbs) of aluminum quenched	
Chromium	0.896	0.367
Cyanide	0.591	0.245
Zinc	2.974	1.243
Aluminum	13.10	6.519

SUBPART E

Cleaning or Etching Bath

Pollutant or pollutant property	BAT effluent limitations	
	Maximum for any 1 day	Maximum for monthly average
	mg/off-kg (lb/million off-lbs) of aluminum cleaned or etched	
Chromium	0.079	0.032
Cyanide	0.052	0.022
Zinc	0.262	0.109
Aluminum	1.151	0.563

SUBPART E

Cleaning or Etching Rinse

Pollutant or pollutant property	BAT effluent limitations	
	Maximum for any 1 day	Maximum for monthly average
	mg/off-kg (lb/million off-lbs) of aluminum cleaned or etched	
Chromium	0.612	0.251
Cyanide	0.404	0.167
Zinc	2.031	0.849
Aluminum	8.944	4.451

SUBPART E

Cleaning or Etching Scrubber Liquor

Pollutant or pollutant property	BAT effluent limitations	
	Maximum for any 1 day	Maximum for monthly average
	mg/off-kg (lb/million off-lbs) of aluminum cleaned or etched	
Chromium	0.851	0.348
Cyanide	0.561	0.232
Zinc	2.82	1.179
Aluminum	12.43	6.19

[48 FR 49149, Oct. 24, 1983; 49 FR 11633 and 11635, Mar. 27, 1984]

§ 467.54 New source performance standards.

Any new source subject to this subpart must achieve the following performance standards. The discharge of wastewater pollutants from the core and ancillary operations shall not exceed the values set forth below:

SUBPART E

Core

Pollutant or pollutant property	NSPS	
	Maximum for any 1 day	Maximum for monthly average
	mg/off-kg (lb/million off-lbs) of aluminum drawn with neat oils	
Chromium	0.019	0.008
Cyanide	0.010	0.004
Zinc	0.051	0.021
Aluminum	0.304	0.135
Oil and grease	0.498	0.498
Suspended solids	0.747	0.598
pH	(1)	(1)

[1] Within the range of 7.0 to 10 at all times.

SUBPART E

Continuous Rod Casting Spent Lubricant

Pollutant or pollutant property	NSPS	
	Maximum for any 1 day	Maximum for monthly average
	mg/off-kg (lb/million off-lbs) of aluminum rod cast	
Chromium	0.0008	0.0003
Cyanide	0.0004	0.0002
Zinc	0.002	0.0008
Aluminum	0.012	0.006
Oil and grease	0.02	0.02
Suspended solids	0.03	0.024
pH	(1)	(1)

[1] Within the range of 7.0 to 10 at all times.

SUBPART E

Continuous Rod Casting Contact Cooling Water

Pollutant or pollutant property	NSPS	
	Maximum for any 1 day	Maximum for monthly average
	mg/off-kg (lb/million off-lbs) of aluminum rod cast	
Chromium	0.072	0.029
Cyanide	0.039	0.016
Zinc	0.198	0.082
Aluminum	1.185	0.526
Oil and grease	1.939	1.939
Suspended solids	2.909	2.327
pH	(1)	(1)

[1] Within the range of 7.0 to 10 at all times.

SUBPART E

Solution Heat Treatment Contact Cooling Water

Pollutant or pollutant property	NSPS	
	Maximum for any 1 day	Maximum for monthly average
	mg/off-kg (lb/million off-lbs) of aluminum quenched	
Chromium	0.754	0.306
Cyanide	0.408	0.163
Zinc	2.08	0.856
Aluminum	12.45	5.52
Oil and grease	20.37	20.37
Suspended solids	30.56	24.45
pH	(1)	(1)

[1] Within the range of 7.0 to 10 at all times.

SUBPART E

Cleaning or Etching Bath

Pollutant or pollutant property	NSPS	
	Maximum for any 1 day	Maximum for monthly average
	mg/off-kg (lb/million off-lbs) of aluminum cleaned or etched	
Chromium	0.066	0.027
Cyanide	0.036	0.015
Zinc	0.183	0.075
Aluminum	1.094	0.485
Oil and grease	1.79	1.79
Suspended solids	2.69	2.15
pH	(1)	(1)

[1] Within the range of 7.0 to 10 at all times.

SUBPART E

Cleaning or Etching Rinse

Pollutant or pollutant property	NSPS	
	Maximum for any 1 day	Maximum for monthly average
	mg/off-kg (lb/million off-lbs) of aluminum cleaned or etched	
Chromium	0.515	0.209
Cyanide	0.278	0.111
Zinc	1.42	0.584
Aluminum	8.50	3.77
Oil and grease	13.91	13.91
Suspended solids	20.87	16.70
pH	(1)	(1)

[1] Within the range of 7.0 to 10 at all times.

SUBPART E

Cleaning or Etching Scrubber Liquor

Pollutant or pollutant property	NSPS	
	Maximum for any 1 day	Maximum for monthly average
	mg/off-kg (lb/million off-lbs) of aluminum cleaned or etched	
Chromium	0.715	0.290
Cyanide	0.387	0.155
Zinc	1.97	0.812
Aluminum	11.81	5.24
Oil and grease	19.33	19.33
Suspended solids	29.00	23.20
pH	(1)	(1)

[1] Within the range of 7.0 to 10 at all times.

[48 FR 49149, Oct. 24, 1983; 49 FR 11633 and 11635, Mar. 27, 1984]

§ 467.55 Pretreatment standards for existing sources.

Except as provided in 40 CFR 403.7 and 403.13, any existing source subject to this subpart which introduces pollutants into a publicly owned treatment works must comply with 40 CFR part 403 and achieve the following pretreatment standards for existing sources. The mass of wastewater pollutants in aluminum forming process wastewater introduced into a POTW shall not exceed the values set forth below:

SUBPART E

Core

Pollutant or pollutant property	PSES	
	Maximum for any 1 day	Maximum for monthly average
	mg/off-kg (lb/million off-lbs) of aluminum drawn with neat oils	
Chromium	0.022	0.009
Cyanide	0.015	0.006
Zinc	0.073	0.031
TTO	0.035	.....
Oil and grease (alternate monitoring parameter)	2.6	1.3

SUBPART E

Continuous Rod Casting Lubricant

Pollutant or pollutant property	PSES	
	Maximum for any 1 day	Maximum for monthly average
	mg/off-kg (lb/million off-lbs) of aluminum rod cast	
Chromium	0.0009	0.0004
Cyanide	0.0006	0.0003
Zinc	0.0029	0.0012
TTO	0.0014	.....
Oil and grease (alternate monitoring parameter)	0.10	0.052

SUBPART E

Continuous Rod Casting Contact Cooling Water

Pollutant or pollutant property	PSES	
	Maximum for any 1 day	Maximum for monthly average
	mg/off-kg (lb/million off-lbs) of aluminum rod cast	
Chromium	0.086	0.035
Cyanide	0.057	0.023
Zinc	0.283	0.118
TTO	0.133	.....
Oil and grease (alternate monitoring parameter)	10	5.1

SUBPART E

Solution Heat Treatment Contact Cooling Water

Pollutant or pollutant property	PSES	
	Maximum for any 1 day	Maximum for monthly average
	mg/off-kg (lb/million off-lbs) of aluminum quenched	
Chromium	0.896	0.367
Cyanide	0.591	0.245
Zinc	2.98	1.24
TTO	1.41	.....
Oil and grease (alternate monitoring parameter)	110	53

SUBPART E

Cleaning or Etching Bath

Pollutant or pollutant property	PSES	
	Maximum for any 1 day	Maximum for monthly average
	mg/off-kg (lb/million off-lbs) of aluminum cleaned or etched	
Chromium	0.079	0.033
Cyanide	0.052	0.022
Zinc	0.262	0.109
TTO	0.124	.....
Oil and grease (alternate monitoring parameter)	9.3	4.7

SUBPART E

Cleaning or Etching Rinse

Pollutant or pollutant property	PSES	
	Maximum for any 1 day	Maximum for monthly average
	mg/off-kg (lb/million off-lbs) of aluminum cleaned or etched	
Chromium	0.612	0.251
Cyanide	0.404	0.17
Zinc	2.03	0.85
TTO	0.96	.....
Oil and grease (alternate monitoring parameter)	73	36

SUBPART E

Cleaning or Etching Scrubber Liquor

Pollutant or pollutant property	PSES	
	Maximum for any 1 day	Maximum for monthly average
	mg/off-kg (lb/million off-lbs) of aluminum cleaned or etched	
Chromium	0.851	0.348
Cyanide	0.561	0.232
Zinc	2.82	1.18
TTO	1.34	.....
Oil and grease (alternate monitoring parameter)	100	50

[48 FR 49149, Oct. 24, 1983; 49 FR 11632, 11633, and 11635, Mar. 27, 1984, as amended at 53 FR 52369–52372, Dec. 27, 1988]

§ 467.56 Pretreatment standards for new sources.

Except as provided in 40 CFR 403.7, any new source subject to this subpart which introduces pollutants into a publicly owned treatment works must

comply with 40 CFR part 403 and achieve the following pretreatment standards for new sources.

The mass of wastewater pollutants in aluminum forming process wastewater introduced into a POTW shall not exceed the values set forth below:

SUBPART E

Core

Pollutant or pollutant property	PSNS	
	Maximum for any 1 day	Maximum for monthly average
	mg/off-kg (lb/million off-lbs) of aluminum drawn with neat oils	
Chromium	0.019	0.008
Cyanide	0.010	0.004
Zinc	0.051	0.021
TTO	0.035	.....
Oil and grease (alternate monitoring parameter)	0.50	0.50

SUBPART E

Continuous Rod Casting Lubricant

Pollutant or pollutant property	PSNS	
	Maximum for any 1 day	Maximum for monthly average
	mg/off-kg (lb/million off-lbs) of aluminum rod cast	
Chromium	0.0007	0.0003
Cyanide	0.0004	0.0002
Zinc	0.0020	0.0008
TTO	0.0014	.....
Oil and grease (alternate monitoring parameter)	0.020	0.020

SUBPART E

Continuous Rod Casting Contact Cooling Water

Pollutant or pollutant property	PSNS	
	Maximum for any 1 day	Maximum for monthly average
	mg/off-kg (lb/million off-lbs) of aluminum rod cast	
Chromium	0.072	0.029
Cyanide	0.039	0.016
Zinc	0.198	0.134
TTO	.....	0.082
Oil and grease (alternate monitoring parameter)	1.94	1.94

SUBPART E

Solution Heat Treatment Contact Cooling Water

Pollutant or pollutant property	PSNS	
	Maximum for any 1 day	Maximum for monthly average
	mg/off-kg (lb/million off-lbs) of aluminum quenched	
Chromium	0.76	0.306
Cyanide	0.41	0.163
Zinc	2.08	0.856
TTO	1.41	.....
Oil and grease (alternate monitoring parameter)	20.37	20.37

SUBPART E

Cleaning or Etching Bath

Pollutant or pollutant property	PSNS	
	Maximum for any 1 day	Maximum for monthly average
	mg/off-kg (lb/million off-lbs) of aluminum cleaned or etched	
Chromium	0.067	0.027
Cyanide	0.036	0.015
Zinc	0.183	0.075
TTO	0.124	.....
Oil and grease (alternate monitoring parameter)	1.79	1.79

SUBPART E

Cleaning or Etching Rinse

Pollutant or pollutant property	PSNS	
	Maximum for any 1 day	Maximum for monthly average
	mg/off-kg (lb/million off-lbs) of aluminum cleaned or etched	
Chromium	0.52	0.21
Cyanide	0.28	0.11
Zinc	1.42	0.59
TTO	0.96	.....
Oil and grease (alternate monitoring parameter)	13.91	13.91

SUBPART E

Cleaning or Etching Scrubber Liquor

Pollutant or pollutant property	PSNS	
	Maximum for any 1 day	Maximum for monthly average
	mg/off-kg (lb/million off-lbs) of aluminum cleaned or etched	
Chromium	0.72	0.29
Cyanide	0.39	0.16
Zinc	1.97	0.812
TTO	1.34	.....
Oil and grease (alternate monitoring parameter)	19.33	19.33

[48 FR 49149, Oct. 24, 1983; 49 FR 11632, 11633, and 11635, Mar. 27, 1984]

§ 467.57 Effluent limitations representing the degree of effluent reduction attainable by the application of the best conventional pollutant control technology. [Reserved]

Subpart F—Drawing With Emulsions or Soaps Subcategory

§ 467.60 Applicability; description of the drawing with emulsions or soaps subcategory.

This subpart applies to discharges of pollutants to waters of the United States and introduction of pollutants into publicly owned treatment works from the core and the ancillary operations of the drawing with emulsions or soaps subcategory.

§ 467.61 Specialized definitions.

For the purpose of this subpart:

(a) The ''core'' of the drawing with emulsions or soaps subcategory shall include drawing using emulsions or soaps, stationary casting, artificial aging, annealing, degreasing, sawing, and swaging.

(b) The term ''ancillary operation'' shall mean any operation not previously included in the core, performed on-site, following or preceding the drawing operation. The ancillary operations shall include continuous rod casting, solution heat treatment and cleaning or etching.

§ 467.62 Effluent limitations representing the degree of effluent reduction attainable by the application of best practicable control technology currently available.

Except as provided in 40 CFR 125.30 through 125.32, any existing point source subject to this subpart must achieve the following effluent limitations representing the degree of effluent reduction attainable by the application of the best practicable control technology currently available:

SUBPART F

Core

Pollutant or pollutant property	BPT effluent limitations	
	Maximum for any 1 day	Maximum for monthly average
	mg/off-kg (lb/million off-lbs) of aluminum drawn with emulsions or soaps	
Chromium	0.205	0.084
Cyanide	0.135	0.056
Zinc	0.680	0.285
Aluminum	3.00	1.50
Oil and grease	9.33	5.60
Suspended solids	19.12	9.10
pH	(1)	(1)

[1]Within the range of 7.0 to 10 at all times.

SUBPART F

Continuous Rod Casting Spent Lubricant

Pollutant or pollutant property	BPT effluent limitations	
	Maximum for any 1 day	Maximum for monthly average
	mg/off-kg (lb/million off-lbs) of aluminum cast	
Chromium	0.0009	0.0004
Cyanide	0.0006	0.0003
Zinc	0.0029	0.001
Aluminum	0.013	0.007
Oil and grease	0.040	0.024
Suspended solids	0.081	0.039
pH	(1)	(1)

[1]Within the range of 7.0 to 10 at all times.

SUBPART F

Continuous Rod Casting Contact Cooling Water

Pollutant or pollutant property	BPT effluent limitations	
	Maximum for any 1 day	Maximum for monthly average
	mg/off-kg (lb/million off-lbs) of aluminum cast	
Chromium	0.684	0.28
Cyanide	0.450	0.187
Zinc	2.27	0.949
Aluminum	10.00	4.976
Oil and grease	31.10	18.66
Suspended solids	63.76	30.323
pH	(1)	(1)

[1] Within the range of 7.0 to 10 at all times.

SUBPART F

Solution Heat Treatment Contact Cooling Water

Pollutant or pollutant property	BPT effluent limitations	
	Maximum for any 1 day	Maximum for monthly average
	mg/off-kg (lb/million off-lbs) of aluminum quenched	
Chromium	3.39	1.39
Cyanide	2.24	0.93
Zinc	11.25	4.70
Aluminum	49.55	24.66
Oil and grease	154.10	92.46
Suspended solids	315.91	150.25
pH	(1)	(1)

[1] Within the range of 7.0 to 10 at all times.

SUBPART F

Cleaning or Etching Bath

Pollutant or pollutant property	BPT effluent limitations	
	Maximum for any 1 day	Maximum for monthly average
	mg/off-kg (lb/million off-lbs) of aluminum cleaned or etched	
Chromium	0.079	0.032
Cyanide	0.052	0.022
Zinc	0.262	0.109
Aluminum	1.15	0.573
Oil and grease	3.58	2.15
Suspended solids	7.34	3.49
pH	(1)	(1)

[1] Within the range of 7.0 to 10 at all times.

SUBPART F

Cleaning or Etching Rinse

Pollutant or pollutant property	BPT effluent limitations	
	Maximum for any 1 day	Maximum for monthly average
	mg/off-kg (lb/million off-lbs) of aluminum cleaned or etched	
Chromium	6.12	2.51
Cyanide	4.04	1.67
Zinc	20.31	8.49
Aluminum	89.46	44.519
Oil and grease	278.24	166.95
Suspended solids	570.39	271.29
pH	(1)	(1)

[1] Within the range of 7.0 to 10 at all times.

SUBPART F

Cleaning or Etching Scrubber Liquor

Pollutant or pollutant property	BPT effluent limitations	
	Maximum for any 1 day	Maximum for monthly average
	mg/off-kg (lb/million off-lbs) of aluminum cleaned or etched	
Chromium	7.00	2.86
Cyanide	4.61	1.91
Zinc	23.22	9.70
Aluminum	102.24	50.88
Oil and grease	318.00	190.80
Suspended solids	651.90	310.05
pH	(1)	(1)

[1] Within the range of 7.0 to 10 at all times.

[48 FR 49149, Oct. 24, 1983; 49 FR 11633 and 11635, Mar. 27, 1984]

§ 467.63 Effluent limitations representing the degree of effluent reduction attainable by the application of best available technology economically achievable.

Except as provided in 40 CFR 125.30 through 125.32, any existing point source subject to this subpart must achieve the following effluent limitations representing the degree of effluent reduction attainable by the application of the best available technology economically achievable. The discharge of wastewater pollutants from the core shall not exceed the volumes set forth below:

SUBPART F

Core

Pollutant or pollutant property	BAT effluent limitations	
	Maximum for any 1 day	Maximum for monthly average
	mg/off-kg (lb/million off-lbs) of aluminum drawn with emulsions or soaps	
Chromium	0.205	0.084
Cyanide	0.135	0.056
Zinc	0.681	0.285
Aluminum	3.00	1.49

SUBPART F

Continuous Rod Casting Spent Lubricant

Pollutant or pollutant property	BAT effluent limitations	
	Maximum for any 1 day	Maximum for monthly average
	mg/off-kg (lb/million off-lbs) of aluminum rod cast	
Chromium	0.0009	0.0004
Cyanide	0.0006	0.0003
Zinc	0.0029	0.0012
Aluminum	0.013	0.0063

SUBPART F

Continuous Rod Casting Contact Cooling Water

Pollutant or pollutant property	BAT effluent limitations	
	Maximum for any 1 day	Maximum for monthly average
	mg/off-kg (lb/million off-lbs) of aluminum rod cast	
Chromium	0.086	0.035
Cyanide	0.056	0.024
Zinc	0.283	0.118
Aluminum	1.25	0.62

SUBPART F

Solution Heat Treatment Contact Cooling Water

Pollutant or pollutant property	BAT effluent limitations	
	Maximum for any 1 day	Maximum for monthly average
	mg/off-kg (lb/million off-lbs) of aluminum quenched	
Chromium	0.897	0.37
Cyanide	0.591	0.25
Zinc	2.98	1.24
Aluminum	13.10	6.52

SUBPART F

Cleaning or Etching Bath

Pollutant or pollutant property	BAT effluent limitations	
	Maximum for any 1 day	Maximum for monthly average
	mg/off-kg (lb/million off-lbs) of aluminum cleaned or etched	
Chromium	0.079	0.032
Cyanide	0.052	0.022
Zinc	0.262	0.11
Aluminum	1.15	0.57

SUBPART F

Cleaning or Etching Rinse

Pollutant or pollutant property	BAT effluent limitations	
	Maximum for any 1 day	Maximum for monthly average
	mg/off-kg (lb/million off-lbs) of aluminum cleaned or etched	
Chromium	0.612	0.251
Cyanide	0.404	0.167
Zinc	2.03	0.849
Aluminum	8.95	4.45

SUBPART F

Cleaning or Etching Scrubber Liquor

Pollutant or pollutant property	BAT effluent limitations	
	Maximum for any 1 day	Maximum for monthly average
	mg/off-kg (lb/million off-lbs) of aluminum cleaned or etched	
Chromium	0.85	0.348
Cyanide	0.561	0.232
Zinc	2.82	1.18
Aluminum	12.43	6.19

[48 FR 49149, Oct. 24, 1983; 49 FR 11633, 11635, and 11636, Mar. 27, 1984]

§ 467.64 New source performance standards.

Any new source subject to this subpart must achieve the following performance standards. The discharge of wastewater pollutants from the core shall not exceed the values set forth below:

SUBPART F

Core

Pollutant or pollutant property	NSPS	
	Maximum for any 1 day	Maximum for monthly average
	mg/off-kg (lb/million off-lbs) of aluminum drawn with emulsions or soaps	
Chromium	0.173	0.070
Cyanide	0.094	0.038
Zinc	0.476	0.196
Aluminum	2.85	1.27
Oil and grease	4.67	4.67
Suspended solids	7.00	5.60
pH	(1)	(1)

1 Within the range of 7.0 to 10.0 at all times.

SUBPART F

Continuous Rod Casting Spent Lubricant

Pollutant or pollutant property	NSPS	
	Maximum for any 1 day	Maximum for monthly average
	mg/off-kg (lb/million off-lbs) of aluminum rod cast	
Chromium	0.0008	0.0003
Cyanide	0.0004	0.0002
Zinc	0.0020	0.0008
Aluminum	0.012	0.0053
Oil and grease	0.020	0.020
Suspended solids	0.030	0.024
pH	(1)	(1)

1 Within the range of 7.0 to 10.0 at all times.

SUBPART F

Continuous Rod Casting Contact Cooling Water

Pollutant or pollutant property	NSPS	
	Maximum for any 1 day	Maximum for monthly average
	mg/off-kg (lb/million off-lbs) of aluminum rod cast	
Chromium	0.072	0.029
Cyanide	0.039	0.016
Zinc	0.198	0.081
Aluminum	1.184	0.526
Oil and grease	1.940	1.940
Suspended solids	2.91	2.33
pH	(1)	(1)

1 Within the range of 7.0 to 10.0 at all times.

SUBPART F

Solution Heat Treatment Contact Cooling Water

Pollutant or pollutant property	NSPS	
	Maximum for any 1 day	Maximum for monthly average
	mg/off-kg (lb/million off-lbs) of aluminum quenched	
Chromium	0.754	0.31
Cyanide	0.408	0.16
Zinc	2.08	0.86
Aluminum	12.450	5.52
Oil and grease	20.37	20.37
Suspended solids	20.56	24.45
pH	(1)	(1)

1 Within the range of 7.0 to 10.0 at all times.

SUBPART F

Cleaning or Etching Bath

Pollutant or pollutant property	NSPS	
	Maximum for any 1 day	Maximum for monthly average
	mg/off-kg (lb/million off-lbs) of aluminum cleaned or etched	
Chromium	0.066	0.027
Cyanide	0.036	0.015
Zinc	0.183	0.075
Aluminum	1.094	0.49
Oil and grease	1.79	1.79
Suspended solids	2.69	2.15
pH	(1)	(1)

1 Within the range of 7.0 to 10.0 at all times.

SUBPART F

Cleaning or Etching Rinse

Pollutant or pollutant property	NSPS	
	Maximum for any 1 day	Maximum for monthly average
	mg/off-kg (lb/million off-lbs) of aluminum cleaned or etched	
Chromium	0.515	0.21
Cyanide	0.278	0.11
Zinc	1.42	0.59
Aluminum	8.50	3.77
Oil and grease	13.91	13.91
Suspended solids	20.87	16.70
pH	(1)	(1)

[1] Within the range of 7.0 to 10.0 at all times.

SUBPART F

Cleaning or Etching Scrubber Liquor

Pollutant or pollutant property	NSPS	
	Maximum for any 1 day	Maximum for monthly average
	mg/off-kg (lb/million off-lbs) of aluminum cleaned or etched	
Chromium	0.72	0.290
Cyanide	0.387	0.155
Zinc	1.97	0.812
Aluminum	1.18	5.24
Oil and grease	19.33	19.33
Suspended solids	29.00	23.20
pH	(1)	(1)

[1] Within the range of 7.0 to 10.0 at all times.

[48 FR 49149, Oct. 24, 1983; 49 FR 11633 and 11636, Mar. 27, 1984]

§ 467.65 Pretreatment standards for existing sources.

Except as provided in 40 CFR 403.7 and 403.13, any existing source subject to this subpart which introduces pollutants into a publicly owned treatment works must comply with 40 CFR part 403 and achieve the following pretreatment standards for existing sources. The mass of wastewater pollutants in aluminum forming process wastewater introduced into a POTW shall not exceed the values set forth below:

SUBPART F

Core

Pollutant or pollutant property	PSES	
	Maximum for any 1 day	Maximum for monthly average
	mg/off-kg (lb/million off-lbs) of aluminum drawn with emulsions or soaps	
Chromium	0.205	0.084
Cyanide	0.135	0.056
Zinc	0.681	0.285
TTO	0.32	.....
Oil and grease (alternate monitoring parameter)	25	12

SUBPART F

Continuous Rod Casting Lubricant

Pollutant or pollutant property	PSES	
	Maximum for any 1 day	Maximum for monthly average
	mg/off-kg (lb/million off-lbs) of aluminum rod cast	
Chromium	0.0009	0.0004
Cyanide	0.0006	0.0003
Zinc	0.0029	0.0012
TTO	0.0014	.....
Oil and grease (alternate monitoring parameter)	0.10	0.052

SUBPART F

Continuous Rod Casting Contact Cooling Water

Pollutant or pollutant property	PSES	
	Maximum for any 1 day	Maximum for monthly average
	mg/off-kg (lb/million off-lbs) of aluminum rod cast	
Chromium	0.086	0.035
Cyanide	0.056	0.024
Zinc	0.283	0.119
TTO	0.134	.....
Oil and grease (alternate monitoring parameter	10	5.1

SUBPART F

Solution Heat Treatment Contact Cooling Water

Pollutant or pollutant property	PSES	
	Maximum for any 1 day	Maximum for monthy average
	mg/off-kg (lb/million off-lbs) of aluminum quenched	
Chromium	0.896	0.367
Cyanide	0.591	0.245
Zinc	2.98	1.25
TTO	1.41	.....
Oil and grease (alternate monitoring parameter)	110	53

SUBPART F

Cleaning or Etching Bath

Pollutant or pollutant property	PSES	
	Maximum for any 1 day	Maximum for monthy average
	mg/off-kg (lb/million off-lbs) of aluminum cleaned or etched	
Chromium	0.079	0.032
Cyanide	0.052	0.022
Zinc	0.262	0.11
TTO	0.124	.....
Oil and grease (alternate monitoring parameter)	9.3	4.7

SUBPART F

Cleaning or Etching Rinse

Pollutant or pollutant property	PSES	
	Maximum for any 1 day	Maximum for monthy average
	mg/off-kg (lb/million off-lbs) of aluminum cleaned or etched	
Chromium	0.612	0.251
Cyanide	0.404	0.167
Zinc	2.03	0.849
TTO	0.96	.....
Oil and grease (alternate monitoring parameter)	73	36

SUBPART F

Cleaning or Etching Scrubber Liquor

Pollutant or pollutant property	PSES	
	Maximum for any 1 day	Maximum for monthy average
	mg/off-kg (lb/million off-lbs) of aluminum cleaned or etched	
Chromium	0.851	0.348
Cyanide	0.561	0.232
Zinc	2.82	1.18
TTO	1.33	.....
Oil and grease (alternate monitoring parameter)	100	50

[48 FR 49149, Oct. 24, 1983; 49 FR 11632 and 11636, Mar. 27, 1984, as amended at 53 FR 52369–52372, Dec. 27, 1988]

§ 467.66 Pretreatment standards for new sources.

Except as provided in 40 CFR 403.7, any new source subject to this subpart which introduces pollutants into a publicly owned treatment works must comply with 40 CFR part 403 and achieve the following pretreatment standards for new sources. The mass of wastewater pollutants in aluminum forming process wastewaters introduced into a POTW shall not exceed the values set forth below:

SUBPART F

Core

Pollutant or pollutant property	PSNS	
	Maximum for any 1 day	Maximum for monthly average
	mg/off-kg (lb/million off-lbs) of aluminum drawn with emulsions or soaps	
Chromium	0.173	0.070
Cyanide	0.094	0.038
Zinc	0.48	0.196
TTO	0.32	.....
Oil and grease (alternate monitoring parameter)	4.67	4.67

SUBPART F

Continuous Rod Casting Lubricant

Pollutant or pollutant property	PSNS	
	Maximum for any 1 day	Maximum for monthly average
	mg/off-kg (lb/million off-lbs) of aluminum rod cast	
Chromium	0.0008	0.0003
Cyanide	0.0004	0.0002
Zinc	0.0020	0.0008
TTO	0.0014	.....
Oil and grease (alternate monitoring parameter)	0.020	0.020

SUBPART F

Continuous Rod Casting Contact Cooling Water

Pollutant or pollutant property	PSNS	
	Maximum for any 1 day	Maximum for monthly average
	mg/off-kg (lb/million off-lbs) of aluminum rod cast	
Chromium	0.072	0.029
Cyanide	0.039	0.016
Zinc	0.198	0.082
TTO	0.134	.....
Oil and grease (alternate monitoring parameter)	1.94	1.94

SUBPART F

Solution Heat Treatment Contact Cooling Water

Pollutant or pollutant property	PSNS	
	Maximum for any 1 day	Maximum for monthly average
	mg/off-kg (lb/million off-lbs) of aluminum quenched	
Chromium	0.76	0.306
Cyanide	0.41	0.163
Zinc	2.08	0.856
TTO	1.41	.....
Oil and grease (alternate monitoring parameter)	20.37	20.37

SUBPART F

Cleaning or Etching Bath

Pollutant or pollutant property	PSNS	
	Maximum for any 1 day	Maximum for monthly average
	mg/off-kg (lb/million off-lbs) of aluminum cleaned or etched	
Chromium	0.067	0.027
Cyanide	0.036	0.015
Zinc	0.183	0.075
TTO	0.124	.....
Oil and grease (alternate monitoring parameter)	1.79	1.79

SUBPART F

Cleaning or Etching Rinse

Pollutant or pollutant property	PSNS	
	Maximum for any 1 day	Maximum for monthly average
	mg/off-kg (lb/million off-lbs) of aluminum cleaned or etched	
Chromium	0.52	0.21
Cyanide	0.28	0.11
Zinc	1.42	0.59
TTO	0.96	.....
Oil and grease (alternate monitoring parameter)	13.91	13.91

SUBPART F

Cleaning or Etching Scrubber Liquor

Pollutant or pollutant property	PSNS	
	Maximum for any 1 day	Maximum for monthly average
	mg/off-kg (lb/million off-lbs) of aluminum cleaned or etched	
Chromium	0.715	0.290
Cyanide	0.387	0.155
Zinc	1.97	0.812
TTO	1.34	.....
Oil and grease (alternate monitoring parameter)	19.33	19.33

[48 FR 49149, Oct. 24, 1983; 49 FR 11632, 11633, and 11636, Mar. 27, 1984]

§ 467.67 Effluent limitations representing the degree of effluent reduction attainable by the application of the best conventional pollutant control technology. [Reserved]

PART 468—COPPER FORMING POINT SOURCE CATEGORY

GENERAL PROVISIONS

Sec.
468.01 Applicability.
468.02 Specialized definitions.
468.03 Monitoring and reporting requirements.
468.04 Compliance date for PSES.

Subpart A—Copper Forming Subcategory

468.10 Applicability; description of the copper forming subcategory.
468.11 Effluent limitations representing the degree of effluent reduction attainable by the application of the best practicable control technology currently available (BPT).
468.12 Effluent limitations representing the degree of effluent reduction attainable by the application of the best available control technology economically achievable.
468.13 New source performance standards (NSPS).
468.14 Pretreatment standards for existing sources (PSES).
468.15 Pretreatment standards for new sources (PSNS).
468.16 Effluent limitations representing the degree of effluent reduction attainable by the application of the best conventional pollution control technology (BCT). [Reserved]

Subpart B—Beryllium Copper Forming Subcategory

468.20 Applicability; description of the beryllium copper forming subcategory.

AUTHORITY: Secs. 301, 304 (b), (c), (e), and (g), 306 (b) and (c), 307 (b) and (c), and 501 of the Clean Water Act (the Federal Water Pollution Control Act Amendments of 1972, as amended by the Clean Water Act of 1977) the ''Act''); 33 U.S.C. 1311, 1314 (b), (c), (e), and (g), 1316 (b) and (c), 1317 (b) and (c), and 1361; 86 Stat. 816, Pub. L. 92–500; 91 Stat. 1567, Pub. L. 95–217.

SOURCE: 48 FR 36957, Aug. 15, 1983, unless otherwise noted.

GENERAL PROVISIONS

§ 468.01 Applicability.

(a) The provisions of this part are applicable to discharges resulting from the manufacture of formed copper and copper alloy products. The forming operations covered are hot rolling, cold rolling, drawing, extrusion and forging. This part does not regulate the forming of precious metals. (See 40 CFR part 471). The casting of copper and copper alloys is not covered by this part. (See 40 CFR part 464).

(b) The discharge allowance for drawing spent lubricant of 40 CFR 468.11(c), 468.14(c), and 468.15(c) are applicable only to those plants that actually discharge the drawing spent lubricant waste stream at copper forming sites. No discharge allowance is applicable or allowable where these wastewaters are hauled off-site for disposal or are otherwise not discharged at copper forming sites.

[51 FR 22521, June 20, 1986]

§ 468.02 Specialized definitions.

In addition to the definitions set forth in 40 CFR part 401 and the chemical analysis methods in 40 CFR part 136, the following definitions apply to this part:

(a) The term ''alkaline cleaning bath'' shall mean a bath consisting of an alkaline cleaning solution through which a workpiece is processed.

(b) The term ''alkaline cleaning rinse'' shall mean a rinse following an alkaline cleaning bath through which a workpiece is processed. A rinse consisting of a series of rinse tanks is considered as a single rinse.

(c) The term ''ancillary operation'' shall mean any operation associated with a primary forming operation. These ancillary operations include surface and heat treatment, hydrotesting, sawing, and surface coating.

(d) The term ''annealing with oil'' shall mean the use of oil to quench a workpiece as it passes from an annealing furnace.

(e) The term ''annealing with water'' shall mean the use of a water spray or

bath, of which water is the major constituent, to quench a workpiece as it passes from an annealing furnace.

(f) The term ''cold rolling'' shall mean the process of rolling a workpiece below the recrystallization temperature of the copper or copper alloy.

(g) The term ''drawing'' shall mean pulling the workpiece through a die or succession of dies to reduce the diameter or alter its shape.

(h) The term ''extrusion'' shall mean the application of pressure to a copper workpiece, forcing the copper to flow through a die orifice.

(i) The term ''extrusion heat treatment'' shall mean the spray application of water to a workpiece immediately following extrusions for the purpose of heat treatment.

(j) The term ''heat treatment'' shall mean the application or removal of heat to a workpiece to change the physical properties of the metal.

(k) The term ''pickling bath'' shall mean any chemical bath (other than alkaline cleaning) through which a workpiece is processed.

(l) The term ''pickling fume scrubber'' shall mean the process of using an air pollution control device to remove particulates and fumes from air above a pickling bath by entraining the pollutants in water.

(m) The term ''pickling rinse'' shall mean a rinse, other than an alkaline cleaning rinse, through which a workpiece is processed. A rinse consisting of a series of rinse tanks is considered as a single rinse.

(n) The term ''off-kilogram (off-pound)'' shall mean the mass of copper or copper alloy removed from a forming or ancillary operation at the end of a process cycle for transfer to a different machine or process.

(o) The term ''rolling'' shall mean the reduction in the thickness or diameter of a workpiece by passing it between rollers.

(p) The term ''solution heat treatment'' shall mean the process introducing a workpiece into a quench bath for the purpose of heat treatment following rolling, drawing or extrusion.

(q) The term ''spent lubricant'' shall mean water or an oil-water mixture which is used in forming operations to reduce friction, heat and wear and ultimately discharged.

(r) The term ''Total Toxic Organics (TTO)'' shall mean the sum of the masses or concentrations of each of the following toxic organic compounds which is found at a concentration greater than 0.010 mg/l.

Benzene
1,1,1-Trichloroethane chloroform
2,6-Dinitrotoluene ethylbenzene methylene chloride napthalene
N-nitrosodiphenylamine anthracene phenanthrene toluene trichloroethylene

(s) The term ''alkaline cleaning rinse for forged parts'' shall mean a rinse following an alkaline cleaning bath through which a forged part is processed. A rinse consisting of a series of rinse tanks is considered as a single rinse.

(t) The term ''pickling rinse for forged parts'' shall mean a rinse, other than an alkaline cleaning rinse, through which forged parts are processed. A rinse consisting of a series of rinse tanks is considered as a single rinse.

(u) The term ''tumbling or burnishing'' shall mean the process of polishing, deburring, removing sharp corners, and generally smoothing parts for both cosmetic and functional purposes, as well as the process of washing the finished parts and cleaning the abrasion media.

(v) The term ''surface coating'' shall mean the process of coating a copper workpiece as well as the associated surface finishing and flattening.

(w) The term ''miscellaneous waste stream'' shall mean the following additional waste streams related to forming copper: hydrotesting, sawing, surface milling, and maintenance.

(x) The term ''precious metals'' shall mean gold, platinum, palladium and silver and their alloys. Any alloy containing 30 or greater percent by weight of precious metals is considered a precious metal.

(y) The term ''beryllium copper alloy'' shall mean any copper alloy that is alloyed to contain 0.10 percent or greater beryllium.

[48 FR 36957, Aug. 15, 1983; 48 FR 50718, Nov. 3, 1983, as amended at 50 FR 34334, Aug. 23, 1985; 51 FR 7571, Mar. 5, 1986]

§ 468.03 Monitoring and reporting requirements.

The following special monitoring requirements apply to all facilities controlled by this regulation.

(a) The ''monthly average'' regulatory values shall be the basis for the monthly average discharge in direct discharge permits and for pretreatment standards. Compliance with the monthly discharge limit is required regardless of the number of samples analyzed and averaged.

(b) As an alternate monitoring procedure for TTO, indirect dischargers may monitor for oil and grease and meet the alternate monitoring standards for oil and grease established for PSES and PSNS. Any indirect discharger meeting the alternate monitoring oil and grease standards shall be considered to meet the TTO standard.

§ 468.04 Compliance date for PSES.

The compliance date for pretreatment standards for existing sources is August 15, 1986.

[48 FR 36957, Aug. 15, 1983, as amended at 48 FR 41410, Sept. 15, 1983]

Subpart A—Copper Forming Subcategory

§ 468.10 Applicability; description of the copper forming subcategory.

This subpart applies to discharges of pollutants to waters of the United States, and introduction of pollutants into publicly owned treatment works from the forming of copper and copper alloys except beryllium copper alloys.

[51 FR 7571, Mar. 5, 1986]

§ 468.11 Effluent limitations representing the degree of effluent reduction attainable by the application of the best practicable control technology currently available (BPT).

Except as provided in 40 CFR 125.30 through 125.32, any existing point source subject to this subpart must achieve the following effluent limitations representing the degree of effluent reduction attainable by the application of the best practicable control technology currently available:

(a) Subpart A—Hot Rolling Spent Lubricant BPT Effluent Limitations.

Pollutant or pollutant property	Maximum for any 1 day	Maximum for monthly average
	Metric units—mg/off-kg of copper or copper alloy hot rolled English units—pounds per 1,000,000 off-pounds of copper or copper alloy hot rolled	
Chromium	0.045	0.018
Copper	0.195	0.103
Lead	0.015	0.013
Nickel	0.197	0.130
Zinc	0.150	0.062
Oil and grease	2.060	1.236
TSS	4.223	2.008
pH	(1)	(1)

[1] Within the range of 7.5 to 10.0 at all times.

(b) Subpart A—Cold Rolling Spent Lubricant BPT Effluent Limitations.

Pollutant or pollutant property	Maximum for any 1 day	Maximum for monthly average
	Metric units—mg/off-kg of copper or copper alloy cold rolled English units—pounds per 1,000,000 off-pounds of copper or copper alloy cold rolled	
Chromium	0.166	0.068
Copper	0.720	0.379
Lead	0.056	0.049
Nickel	0.727	0.481
Zinc	0.553	0.231
Oil and grease	7.580	4.548
TSS	15.539	7.390
pH	(1)	(1)

[1] Within the range of 7.5 to 10.0 at all times.

(c) Subpart A—Drawing Spent Lubricant BPT Effluent Limitations.

Pollutant or pollutant property	Maximum for any 1 day	Maximum for monthly average
	Metric units—mg/off-kg of copper or copper alloy drawn English units—pounds per 1,000,000 off-pounds of copper or copper alloy drawn	
Chromium	0.037	0.015
Copper	0.161	0.085
Lead	0.012	0.011
Nickel	0.163	0.107
Zinc	0.124	0.051
Oil and grease	1.700	1.020
TSS	3.485	1.657
pH	(1)	(1)

[1] Within the range of 7.5 to 10.0 at all times.

(d) Subpart A—Solution Heat Treatment BPT Effluent Limitations.

Pollutant or pollutant property	Maximum for any 1 day	Maximum for monthly average
	Metric units—mg/off-kg of copper or copper alloy heat treated English units—pounds per 1,000,000 off-pounds of copper or copper alloy heat treated	
Chromium	1.118	0.457
Copper	4.827	2.541
Lead	0.381	0.330
Nickel	4.878	3.227
Zinc	3.709	1.550
Oil and grease	50.820	30.492
TSS	104.181	49.549
pH	(1)	(1)

[1] Within the range of 7.5 to 10.0 at all times.

(e) Subpart A—Extrusion Heat Treatment BPT Effluent Limitations.

Pollutant or pollutant property	Maximum for any 1 day	Maximum for monthly average
	Metric units—mg/off-kg of copper or copper alloy heat treated on an extrusion press English units—pounds per 1,000,000 off-pounds of copper or copper alloy heat treated on an extrusion press	
Chromium	0.00088	0.00036
Copper	0.003	0.002
Lead	0.0003	0.00026
Nickel	0.003	0.002
Zinc	0.002	0.001
Oil and grease	0.040	0.024
TSS	0.082	0.039
pH	(1)	(1)

[1] Within the range of 7.5 to 10.0 at all times.

(f) Subpart A—Annealing With Water BPT Effluent Limitations.

Pollutant or pollutant property	Maximum for any 1 day	Maximum for monthly average
	Metric units—mg/off-kg of copper or copper annealed with water English units—pounds per 1,000,000 off-pounds of copper or copper alloy annealed with water	
Chromium	2.493	1.020
Copper	10.767	5.667
Lead	0.850	0.736
Nickel	10.880	7.197
Zinc	8.273	3.456
Oil and grease	113.340	68.004
TSS	232.347	110.506
pH	(1)	(1)

[1] Within the range of 7.5 to 10.0 at all times.

(g) Subpart A—Annealing With Oil BPT Effluent Limitations.

Pollutant or pollutant property	Maximum for any 1 day	Maximum for monthly average
	Metric units—mg/off-kg of copper or copper alloy annealed with oil English units—pounds per 1,000,000 off-pounds of copper or copper alloy annealed with oil	
Chromium	0	0
Copper	0	0
Lead	0	0
Nickel	0	0
Zinc	0	0
Oil and grease	0	0
TSS	0	0
pH	(1)	(1)

[1] Within the range of 7.5 to 10.0 at all times.

(h) Subpart A—Alkaline Cleaning Rinse BPT Effluent Limitations.

Pollutant or pollutant property	Maximum for any 1 day	Maximum for monthly average
	Metric units—mg/off-kg of copper or copper alloy alkaline cleaned English units—pounds per 1,000,000 off-pounds of copper or copper alloy alkaline cleaned	
Chromium	1.854	0.758
Copper	8.006	4.214
Lead	0.632	0.547
Nickel	8.090	5.351
Zinc	6.152	2.570
Oil and grease	84.280	50.568
TSS	172.774	82.173
pH	(1)	(1)

[1] Within the range of 7.5 to 10.0 at all times.

(i) Subpart A—Alkaline Cleaning Rinse for Forged Parts BPT Effluent Limitations.

Pollutant or pollutant property	Maximum for any 1 day	Maximum for monthly average
	Metric units—mg/off-kg of copper or copper alloy forged parts alkaline cleaned English units—pounds per 1,000,000 off-pounds of copper or copper alloy forged parts alkaline cleaned	
Chromium	5.562	2.275
Copper	24.019	12.642
Lead	1.896	1.643
Nickel	24.272	16.055
Zinc	18.457	7.711
Oil and grease	252.840	151.704
TSS	518.322	246.519
pH	(1)	(1)

1 Within the range of 7.5 to 10.0 at all times.

(j) Subpart A—Alkaline Cleaning Bath BPT Effluent Limitations.

Pollutant or pollutant property	Maximum for any 1 day	Maximum for monthly average
	Metric units—mg/off-kg of copper or copper alloy parts alkaline cleaned English units—pounds per 1,000,000 off-pounds of copper or copper alloy forged parts alkaline cleaned	
Chromium	0.020	0.0084
Copper	0.089	0.046
Lead	0.0070	0.0060
Nickel	0.089	0.059
Zinc	0.068	0.028
Oil and grease	0.93	0.56
TSS	1.91	0.91
pH	(1)	(1)

1 Within the range of 7.5 to 10.0 at all times.

(k) Subpart A—Pickling Rinse BPT Effluent Limitations.

Pollutant or pollutant property	Maximum for any 1 day	Maximum for monthly average
	Metric units—mg/off-kg of copper or copper alloy pickled English units—pounds per/ 1,000,000 off-pounds of copper or copper alloy pickled	
Chromium	1.593	0.651
Copper	6.881	3.622
Lead	0.543	0.470
Nickel	6.954	4.599
Zinc	5.288	2.209
Oil and grease	72.440	43.464
TSS	148.502	70.629
pH	(1)	(1)

1 Within the range of 7.5 to 10.0 at all times.

(l) Subpart A—Pickling Rinse for Forged Parts BPT Effluent Limitations.

Pollutant or pollutant property	Maximum for any 1 day	Maximum for monthly average
	Metric units—mg/off-kg of copper or copper alloy forged parts pickled English units—pounds per/ 1,000,000 off-pounds of copper or copper alloy forged parts pickled	
romium	1.723	0.705
Copper	7.444	3.918
Lead	0.587	0.509
Nickel	7.522	4.975
Zinc	5.720	2.389
Oil and grease	78.360	47.016
TSS	160.638	76.401
pH	(1)	(1)

1 Within the range of 7.5 to 10.0 at all times.

(m) Subpart A—Pickling Bath BPT Effluent Limitations.

Pollutant or pollutant property	Maximum for any 1 day	Maximum for monthly average
	Metric units—mg/off-kg of copper or copper alloy pickled English units—pounds per 1,000,000 off-pounds of copper or copper alloy pickle	
Chromium	0.051	0.020
Copper	0.220	0.116
Lead	0.017	0.015
Nickel	0.222	0.147
Zinc	0.169	0.070
Oil and grease	2.320	1.392
TSS	4.756	2.262
pH	(1)	(1)

1 Within the range of 7.5 to 10.0 at all times.

(n) Subpart A—Pickling Fume Scrubber BPT Effluent Limitations.

Pollutant or pollutant property	Maximum for any 1 day	Maximum for monthly average
	Metric units—mg/off-kg of copper or copper alloy pickled English units—pounds per 1,000,000 off-pounds of copper or copper alloy pickled	
Chromium	0.275	0.112
Copper	1.189	0.626
Lead	0.093	0.081
Nickel	1.201	0.795
Zinc	0.913	0.381
Oil and grease	12.520	7.512
TSS	25.666	12.207
pH	(1)	(1)

1 Within the range of 7.5 to 10.0 at all times.

(o) Subpart A—Tumbling or Burnishing BPT Effluent Limitations.

Pollutant or pollutant property	Maximum for any 1 day	Maximum for monthly average
	Metric units—mg/off-kg of copper or copper alloy tumbled or burnished English units—pounds per 1,000,000 off-pounds of copper or copper alloy tumbled or burnished	
Chromium	0.256	0.104
Copper	1.107	0.583
Lead	0.087	0.075
Nickel	1.119	0.740
Zinc	0.851	0.355
Oil and grease	11.660	6.996
TSS	23.903	11.368
pH	(1)	(1)

1 Within the range of 7.5 to 10.0 at all times.

(p) Subpart A—Surface Coating BPT Effluent Limitations.

Pollutant or pollutant property	Maximum for any 1 day	Maximum for monthly average
	Metric units—mg/off-kg of copper or copper alloy surface coated English units—pounds per 1,000,000 off-pounds of copper or copper alloy surface coated	
Chromium	0.326	0.133
Copper	1.411	0.743
Lead	0.111	0.096
Nickel	1.426	0.943
Zinc	1.084	0.453
Oil and grease	14.680	8.916
TSS	30.463	14.488
ph	(1)	(1)

1 Within the range of 7.5 to 10.0 at all times.

(q) Subpart A—Miscellaneous Waste Streams BPT Effluent Limitations.

Pollutant or pollutant property	Maximum for any 1 day	Maximum for monthly average
	Metric units—mg/off-kg of copper or copper alloy formed English units—pounds per 1,000,000 off-pounds of copper or copper alloy formed	
Chromium	0.009	0.003
Copper	0.041	0.021
Lead	0.003	0.002
Nickel	0.041	0.027
Zinc	0.031	0.013
Oil and grease	0.436	0.261
TSS	0.893	0.425
pH	(1)	(1)

1 Within the range of 7.5 to 10.0 at all times.

§ 468.12 Effluent limitations representing the degree of effluent reduction attainable by the application of the best available technology economically achievable.

Except as provided in 40 CFR 125.30 through 125.32, any existing point source subject to this subpart must achieve the following effluent reduction attainable by the application of the best available technology economically achievable (BAT):

(a) Subpart A—Hot Rolling Spent Lubricant BAT Effluent Limitations.

Pollutant or pollutant property	Maximum for any 1 day	Maximum for monthly average
	Metric units—mg/off-kg of copper or copper alloy hot rolled English Units—pounds per 1,000,000 off-pounds of copper or copper alloy hot rolled	
Chromium	0.045	0.018
Copper	0.195	0.103
Lead	0.015	0.013
Nickel	0.197	0.130
Zinc	0.150	0.062

(b) Subpart A—Cold Rolling Spent Lubricant BAT Effluent Limitations.

Pollutant or pollutant property	Maximum for any 1 day	Maximum for monthly average
	Metric units—mg/off-kg of copper or copper alloy cold rolled English units—pounds per 1,000,000 off-pounds of copper or copper alloy cold rolled	
Chromium	0.166	0.068
Copper	0.720	0.379
Lead	0.056	0.049
Nickel	0.727	0.481
Zinc	0.553	0.231

(c) Subpart A—Drawing Spent Lubricant BAT Effluent Limitations.

Pollutant or pollutant property	Maximum for any 1 day	Maximum for monthly average
	Metric units—mg/off-kg of copper or copper alloy drawn English units—pounds per 1,000,000 off-pounds of copper or copper alloy drawn	
Chromium	0.037	0.015
Copper	0.161	0.085
Lead	0.012	0.011
Nickel	0.163	0.107
Zinc	0.124	0.051

(d) Subpart A—Solution Heat Treatment BAT Effluent Limitations.

Pollutant or pollutant property	Maximum for any 1 day	Maximum for monthly average
	Metric units—mg/off-kg of copper or copper alloy heat treated English units—pounds per 1,000,000 off-pounds of copper or copper alloy heat treated	
Chromium	0.284	0.116
Copper	1.227	0.646
Lead	0.096	0.083
Nickel	1.240	0.820
Zinc	0.943	0.394

(e) Subpart A—Extrusion Heat Treatment BAT Effluent Limitations.

Pollutant or pollutant property	Maximum for any 1 day	Maximum for monthly average
	Metric Units—mg/off-kg of copper or copper alloy heat treated on an extrusion press English Units—pounds per/1,000,000 off-pounds of copper or copper alloy heat treated on an extrusion press	
Chromium	0.00088	0.00036
Copper	0.003	0.0020
Lead	0.0003	0.00026
Nickel	0.003	0.002
Zinc	0.002	0.001

(f) Subpart A—Annealing with Water BAT Effluent Limitations.

Pollutant or pollutant property	Maximum for any 1 day	Maximum for monthly average
	Metric Units—mg/off-kg of copper or copper alloy annealed with water English Units—pounds per/1,000,000 off-pounds of copper or copper alloy annealed with water	
Chromium	0.545	0.223
Copper	2.356	1.240
Lead	0.186	0.161
Nickel	2.380	1.574
Zinc	1.810	0.756

(g) Subpart A—Annealing with Oil BAT Effluent Limitations.

Pollutant or pollutant property	Maximum for any 1 day	Maximum for monthly average
	Metric units—mg/off-kg of copper or copper alloy annealed with oil English units—pounds per 1,000,000 off-pounds of copper or copper alloy annealed with oil	
Chromium	0	0
Copper	0	0
Lead	0	0
Nickel	0	0
Zinc	0	0

(h) Subpart A—Alkaline Cleaning Rinse BAT Effluent Limitations.

Pollutant or pollutant property	Maximum for any 1 day	Maximum for monthly average
	Metric units—mg/off-kg of copper or copper alloy alkaline cleaned English units—pounds per 1,000,000 off-pounds of copper or copper alloy alkaline cleaned	
Chromium	1.854	0.758
Copper	8.006	4.214
Lead	0.632	0.547
Nickel	8.090	5.351
Zinc	6.152	2.570

(i) Subpart A—Alkaline Cleaning Rinse for Forged Parts BAT Effluent Limitations.

Pollutant or pollutant property	Maximum for any 1 day	Maximum for monthly average
	Metric Units—mg/off-kg of copper or copper alloy forged parts alkaline cleaned English Units—pounds per 1,000,000 off-pounds of copper or copper alloy forged parts alkaline cleaned	
Chromium	5.562	2.275
Copper	24.019	12.642
Lead	1.896	1.643
Nickel	24.272	16.055
Zinc	18.457	7.711

(j) Subpart A—Alkaline Cleaning Bath BAT Effluent Limitations.

Pollutant or pollutant property	Maximum for any 1 day	Maximum for monthly average
	Metric Units—mg/off-kg of copper or copper alloy alkaline cleaned English Units—pounds per 1,000,000 off-pounds of copper or copper alloy alkaline cleaned	
Chromium	0.020	0.0084
Copper	0.088	0.046
Lead	0.0070	0.0060
Nickel	0.089	0.059
Zinc	0.068	0.028

(k) Subpart A—Pickling Rinse BAT Effluent Limitations.

Pollutant or pollutant property	Maximum for any 1 day	Maximum for monthly average
	Metric Units—mg/off-kg of copper or copper alloy pickled English Units—pounds per 1,000,000 off-pounds of copper or copper alloy pickled	
Chromium	0.574	0.235
Copper	2.481	1.306
Lead	0.195	0.169
Nickel	2.507	1.658
Zinc	1.906	0.796

(l) Subpart A—Pickling Rinse for Forged Parts BAT Effluent Limitations.

Pollutant or pollutant property	Maximum for any 1 day	Maximum for monthly average
	Metric Units—mg/off-kg of copper or copper alloy forged parts pickled English Units—pounds per 1,000,000 off-pounds of copper or copper alloy forged parts pickled	
Chromium	1.723	0.705
Copper	7.444	3.918
Lead	0.587	0.509
Nickel	7.522	4.975
Zinc	5.720	2.389

(m) Subpart A—Pickling Bath BAT Effluent Limitations.

Pollutant or pollutant property	Maximum for any 1 day	Maximum for monthly average
	Metric units—mg/off-kg of copper or copper alloy pickled English units—pounds per 1,000,000 off-pounds of copper or copper alloy pickled	
Chromium	0.051	0.020
Copper	0.220	0.116
Lead	0.017	0.015
Nickel	0.222	0.147
Zinc	0.169	0.070

(n) Subpart A—Pickling Fume Scrubber BAT Effluent Limitations.

Pollutant or pollutant property	Maximum for any 1 day	Maximum for monthly average
	Metric units—mg/off-kg of copper or copper alloy pickled English units—pounds per 1,000,000 off-pounds of copper or copper alloy pickled	
Chromium	0.275	0.112
Copper	1.189	0.626
Lead	0.093	0.081
Nickel	1.201	0.795
Zinc	0.913	0.381

(o) Subpart A—Tumbling or Burnishing BAT Effluent Limitations.

Pollutant or pollutant property	Maximum for any 1 day	Maximum for monthly average
	Metric units—mg/off-kg of copper or copper alloy tumbled or burnished English units—pound per 1,000,000 off-pounds of copper or copper alloy tumbled or burnished	
Chromium	0.256	0.104
Copper	1.107	0.583
Lead	0.087	0.075
Nickel	1.119	0.740
Zinc	0.851	0.355

(p) Subpart A—Surface Coating BAT Effluent Limitations.

Pollutant or pollutant property	Maximum for any 1 day	Maximum for monthly average
	Metric units—mg/off-kg of copper or copper alloy surface coated English units—pound per 1,000,000 off-pounds of copper or copper alloy surface coated	
Chromium	0.326	0.133
Copper	1.411	0.743
Lead	0.111	0.096
Nickel	1.426	0.943
Zinc	1.084	0.453

(q) Subpart A—Miscellaneous Waste Streams BAT Effluent Limitations.

Pollutant or pollutant property	Maximum for any 1 day	Maximum for monthly average
	Metric units—mg/off-kg of copper or copper alloy formed English units—pounds per 1,000,000 off-pounds of copper or copper alloy formed	
Chromium	0.009	0.003
Copper	0.041	0.021
Lead	0.003	0.002
Nickel	0.041	0.027
Zinc	0.031	0.013

§ 468.13 New source performance standards (NSPS).

The following standards of performance establish the quantity or quality of pollutants or pollutant properties, controlled by this section, which may be discharged by a new source subject to the provisions of this subpart:

(a) Subpart A—Hot Rolling Spent Lubricant NSPS.

Pollutant or pollutant property	Maximum for any 1 day	Maximum for monthly average
	Metric units—mg/off-kg of copper or copper alloy hot rolled English units—pounds per 1,000,000 off-pounds of copper or copper alloy hot rolled	
Chromium	0.038	0.015
Copper	0.131	0.062
Lead	0.010	0.0092
Nickel	0.056	0.038
Zinc	0.105	0.043
Oil and grease	1.030	1.030
TSS	1.545	1.236
pH	(1)	(1)

[1] Within the range of 7.5 to 10.0 at all times.

(b) Subpart A—Cold Rolling Spent Lubricant NSPS.

Pollutant or pollutant property	Maximum for any 1 day	Maximum for monthly average
	Metric units—mg/off-kg of copper or copper alloy cold rolled English units—pounds per 1,000,000 off-pounds of copper or copper alloy cold rolled	
Chromium	0.140	0.056
Copper	0.485	0.231
Lead	0.037	0.034
Nickel	0.208	0.140
Zinc	0.386	0.159
Oil and grease	3.790	3.790
TSS	5.685	4.548
pH	(1)	(1)

[1] Within the range of 7.5 to 10.0 at all times.

(c) Subpart A—Drawing Spent Lubricant NSPS.

Pollutant or pollutant property	Maximum for any 1 day	Maximum for monthly average
	Metric units—mg/off-kg of copper or copper alloy drawn English units—pounds per 1,000,000 off-pounds of copper or copper alloy drawn	
Chromium	0.031	0.012
Copper	0.108	0.051
Lead	0.0085	0.0076
Nickel	0.046	0.031
Zinc	0.086	0.035
Oil and grease	0.85	0.85
TSS	1.275	1.020
pH	(1)	(1)

[1] Within the range of 7.5 to 10.0 at all times.

(d) Subpart A—Solution Heat Treatment NSPS.

Pollutant or pollutant property	Maximum for any 1 day	Maximum for monthly average
	Metric units—mg/off-kg of copper or copper alloy drawn English units—pounds per 1,000,000 off-pounds of copper or copper alloy heat treated	
Chromium	0.239	0.096
Copper	0.826	0.394
Lead	0.064	0.058
Nickel	0.355	0.239
Zinc	0.658	0.271
Oil and grease	6.460	6.460
TSS	9.690	7.752
pH	(1)	(1)

[1] Within the range of 7.5 to 10.0 at all times.

(e) Subpart A—Extrusion Heat Treatment NSPS.

Pollutant or pollutant property	Maximum for any 1 day	Maximum for monthly average
	Metric units—mg/off-kg of copper or copper alloy heat treated on an extrusion press English units—pounds per 1,000,000 off-pounds of copper or copper alloy heat treated on and extrusion press	
Chromium	0.00074	0.00030
Copper	0.0020	0.0010
Lead	0.00020	0.00018
Nickel	0.0010	0.00074
Zinc	0.0020	0.00084
Oil and grease	0.020	0.020
TSS	0.030	0.024
pH	(1)	(1)

[1] Within the range of 7.5 to 10.0 at all times.

(f) Subpart A—Annealing with Water NSPS.

Pollutant or pollutant property	Maximum for any 1 day	Maximum for monthly average
	Metric units—mg/off-kg of copper or copper alloy annealed with water English units—pounds per 1,000,000 off-pounds of copper or copper alloy annealed with water	
Chromium	0.458	0.186
Copper	1.587	0.756
Lead	0.124	0.111
Nickel	0.682	0.458
Zinc	1.264	0.520
Oil and grease	12.400	12.400
TSS	18.600	14.880
pH	(1)	(1)

1 Within the range of 7.5 to 10.0 at all times.

(g) Subpart A—Annealing with Oil NSPS.

Pollutant or pollutant property	Maximum for any 1 day	Maximum for monthly average
	Metric units—mg/off-kg of copper or copper alloy annealed with oil English units—pounds per 1,000,000 off-pounds of copper or copper alloy annealed with oil	
Chromium	0	0
Copper	0	0
Lead	0	0
Nickel	0	0
Zinc	0	0
Oil and grease	0	0
TSS	0	0
pH	(1)	(1)

1 Within the range of 7.5 to 10.0 at all times.

(h) Subpart A—Alkaline Cleaning Rinse NSPS.

Pollutant or pollutant property	Maximum for any 1 day	Maximum for monthly average
	Metric units—mg/off-kg of copper or copper alloy alkaline cleaned English units—pounds per 1,000,000 off-pounds of copper or copper alloy alkaline cleaned	
Chromium	1.559	0.632
Copper	5.393	2.570
Lead	0.421	0.379
Nickel	2.317	1.559
Zinc	4.298	1.769
Oil and grease	42.140	42.140
TSS	63.210	50.568
pH	(1)	(1)

1 Within the range of 7.5 to 10.0 at all times.

(i) Subpart A—Alkaline Cleaning Rinse for Forged Parts NSPS.

Pollutant or pollutant property	Maximum for any 1 day	Maximum for monthly average
	Metric units—mg/off-kg of copper or copper alloy forged parts alkaline cleaned English units—pounds per 1,000,000 off-pounds of copper or copper alloy forged parts alkaline cleaned	
Chromium	4.677	1.896
Copper	16.181	7.711
Lead	1.264	1.137
Nickel	6.953	4.677
Zinc	12.894	5.309
Oil and grease	126.420	126.420
TSS	189.630	151.704
pH	(1)	(1)

1 Within the range of 7.5 to 10.0 at all times.

(j) Subpart A—Alkaline Cleaning Bath NSPS.

Pollutant or pollutant property	Maximum for any 1 day	Maximum for monthly average
	Metric units—mg/off-kg of copper or copper alloy alkaline cleaned English units—pounds per 1,000,000 off-pounds of copper or copper alloy alkaline cleaned	
Chromium	0.017	0.0070
Copper	0.059	0.028
Lead	0.0046	0.0042
Nickel	0.025	0.017
Zinc	0.047	0.019
Oil and grease	0.46	0.46
TSS	0.70	0.56
pH	(1)	(1)

1 Within the range of 7.5 to 10.0 at all times.

(k) Subpart A—Pickling Rinse NSPS.

Pollutant or pollutant property	Maximum for any 1 day	Maximum for monthly average
	Metric units—mg/off-kg of copper or copper alloy pickled English units—pounds per/1,000,000 off-pounds of copper or copper alloy pickled	
Chromium	0.216	0.087
Copper	0.748	0.356
Lead	0.058	0.052
Nickel	0.321	0.216
Zinc	0.596	0.245
Oil and grease	5.850	5.850
TSS	8.775	7.020
pH	(1)	(1)

[1] Within the range of 7.5 to 10.0 at all times.

(l) Subpart A—Pickling Rinse for Forged Parts NSPS.

Pollutant or pollutant property	Maximum for any 1 day	Maximum for monthly average
	Metric units—mg/off-kg of copper or copper alloy forged parts pickled English units—pounds per/1,000,000 off-pounds of copper or copper alloy forged parts pickled	
Chromium	0.649	0.263
Copper	2.246	1.070
Lead	0.175	0.157
Nickel	0.965	0.649
Zinc	1.790	0.737
Oil and grease	17.550	17.550
TSS	26.325	21.060
pH	(1)	(1)

[1] Within the range of 7.5 to 10.0 at all times.

(m) Subpart A—Pickling Bath NSPS.

Pollutant or pollutant property	Maximum for any 1 day	Maximum for monthly average
	Metric units—mg/off-kg of copper or copper alloy pickled English units—pounds per 1,000,000 off-pounds of copper or copper alloy pickled	
Chromium	0.042	0.017
Copper	0.148	0.070
Lead	0.011	0.010
Nickel	0.063	0.042
Zinc	0.118	0.048
Oil and grease	1.160	1.160
TSS	1.740	1.392
pH	(1)	(1)

[1] Within the range of 7.5 to 10.0 at all times.

(n) Subpart A—Pickling Fume Scrubber NSPS.

Pollutant or pollutant property	Maximum for any 1 day	Maximum for monthly average
	Metric units—mg/off-kg of copper or copper alloy pickled. English units-pounds per 1,000,000 off-pounds of copper or copper alloy pickled	
Chromium	0.231	0.093
Copper	0.801	0.381
Lead	0.062	0.056
Nickel	0.344	0.231
Zinc	0.638	0.262
Oil and grease	6.260	6.260
TSS	9.390	7.512
pH	(1)	(1)

[1] Within the range of 7.5 to 10.0 at all times.

(o) Subpart A—Tumbling or Burnishing NSPS.

Pollutant or pollutant property	Maximum for any 1 day	Maximum for monthly average
	Metric units—mg/off-kg of copper or copper tumbled or burnished English units—pounds per 1,000,000 off-pounds of copper or copper alloy tumbled or burnished	
Chromium	0.215	0.087
Copper	0.746	0.355
Lead	0.058	0.052
Nickel	0.320	0.215
Zinc	0.594	0.244
Oil and grease	5.830	5.830
TSS	8.745	6.996
pH	(1)	(1)

[1] Within the range of 7.5 to 10.0 at all times.

(p) Subpart A—Surface Coating NSPS.

Pollutant or pollutant property	Maximum for any 1 day	Maximum for monthly average
	Metric units—mg/off-kg of copper or copper alloy surface coated English units—pounds per 1,000,000 off-pounds of copper or copper alloy surface coated	
Chromium	0.274	0.111
Copper	0.951	0.453
Lead	0.074	0.066
Nickel	0.408	0.274
Zinc	0.757	0.312
Oil and grease	7.430	7.430
TSS	11.145	8.916
pH	(1)	(1)

1 Within the range of 7.5 to 10.0 at all times.

(q) Subpart A—Miscellaneous Waste Streams NSPS.

Pollutant or pollutant property	Maximum for any 1 day	Maximum for monthly average
	Metric units—mg/off-kg of copper or copper alloy formed English units—pounds/1,000,000 off-pounds of copper or copper alloy formed	
Chromium	0.008	0.003
Copper	0.027	0.013
Lead	0.0021	0.0019
Nickel	0.011	0.008
Zinc	0.022	0.009
Oil and grease	0.218	0.218
TSS	0.327	0.261
pH	(1)	(1)

Within the range of 7.5 to 10.0 at all times.

[48 FR 36957, Aug. 15, 1983; 48 FR 50718, Nov. 3, 1983]

§ 468.14 Pretreatment standards for existing sources (PSES).

Except as provided in 40 CFR 403.7 and 403.13, any existing source subject to this subpart which introduces pollutants into a publicly owned treatment works must comply with 40 CFR part 403 and achieve the following pretreatment standards for existing sources:

(a) Subpart A—Hot Rolling Spent Lubricant PSES.

Pollutant or pollutant property	Maximum for any 1 day	Maximum for monthly average
	Metric units—mg/off-kg of copper or copper alloy hot rolled English units—pounds per 1,000,000 off-pounds of copper or copper alloy hot rolled	
Chromium	0.045	0.018
Copper	0.195	0.103
Lead	0.015	0.013
Nickel	0.197	0.130
Zinc	0.150	0.062
TTO	0.066	0.035
Oil and grease 1	2.060	1.236

1 For alternate monitoring.

(b) Subpart A—Cold Rolling Spent Lubricant PSES.

Pollutant or pollutant property	Maximum for any 1 day	Maximum for monthly average
	Metric units—mg/off-kg of copper or copper alloy cold rolled English units—pounds per 1,000,000 off-pounds of copper or copper alloy cold rolled	
Chromium	0.166	0.068
Copper	0.720	0.379
Lead	0.056	0.049
Nickel	0.727	0.481
Zinc	0.553	0.231
TTO	0.246	0.128
Oil and grease 1	7.580	4.548

1 For alternate monitoring

(c) Subpart A—Drawing Spent Lubricant PSES.

Pollutant or pollutant property	Maximum for any 1 day	Maximum for monthly average
	Metric units—mg/off-kg of copper or copper alloy drawn English units—pounds per 1,000,000 off-pounds of copper or copper alloy drawn	
Chromium	0.037	0.015
Copper	0.161	0.085
Lead	0.012	0.011
Nickel	0.163	0.107
Zinc	0.124	0.051
TTO	0.055	0.028
Oil and grease 1	1.700	1.020

1 For alternate monitoring.

(d) Subpart A—Solution Heat Treatment PSES.

Pollutant or pollutant property	Maximum for any 1 day	Maximum for monthly average
	Metric units—mg/off-kg of copper or copper alloy heat treated English units—pounds per 1,000,000 off-pounds of copper or copper alloy heat treated	
Chromium	0.284	0.116
Copper	1.227	0.646
Lead	0.096	0.083
Nickel	1.240	0.820
Zinc	0.943	0.394
TTO	0.419	0.219
Oil and grease [1]	12.920	7.752

[1] For alternate monitoring.

(e) Subpart A—Extrusion Heat Treatment PSES.

Pollutant or pollutant property	Maximum for any 1 day	Maximum for monthly average
	Metric units—mg/off-kg of copper or copper alloy heat treated on an extrusion press English units—pounds per 1,000,000 off-pounds of copper or copper alloy heat treated on an extrusion press	
Chromium	0.00088	0.00036
Copper	0.0030	0.0020
Lead	0.00030	0.00026
Nickel	0.0030	0.0020
Zinc	0.0020	0.0010
TTO	0.0010	0.00068
Oil and grease [1]	0.040	0.024

[1] For alternate monitoring.

(f) Subpart A—Annealing with Water PSES.

Pollutant or pollutant property	Maximum for any 1 day	Maximum for monthly average
	Metric units—mg/off-kg of copper or copper alloy annealed with water English units—pounds per 1,000,000 off-pounds of copper or copper alloy annealed with water	
Chromium	0.545	0.223
Copper	2.356	1.240
Lead	0.186	0.161
Nickel	2.380	1.574
Zinc	1.810	0.756
TTO	0.806	0.421
Oil and grease [1]	24.800	14.880

[1] For alternate monitoring.

(g) Subpart A—Annealing With Oil PSES.

Pollutant or pollutant property	Maximum for any 1 day	Maximum for monthly average
	Metric units—mg/off-kg of copper or copper alloy annealed with oil English units—pounds per 1,000,000 off-pounds of copper or copper alloy annealed with oil	
Chromium	0	0
Copper	0	0
Lead	0	0
Nickel	0	0
Zinc	0	0
TTO	0	0
Oil and grease [1]	0	0

[1] For alternate monitoring.

(h) Subpart A—Alkaline Cleaning Rinse PSES.

Pollutant or pollutant property	Maximum for any 1 day	Maximum for monthly average
	Metric units—mg/off-kg of copper or copper alloy alkaline cleaned English units—pounds per 1,000,000-off pounds of copper or copper alloy alkaline cleaned	
Chromium	1.854	0.758
Copper	8.006	4.214
Lead	0.632	0.547
Nickel	8.090	5.351
Zinc	6.152	2.570
TTO	2.739	1.432
Oil and grease [1]	84.280	50.568

[1] For alternate monitoring.

(i) Subpart A—Alkaline Cleaning Rinse for Forged Parts PSES.

Pollutant or pollutant property	Maximum for any 1 day	Maximum for monthly average
	Metric units—mg/off-kg of copper or copper alloy forged parts alkaline cleaned English units—pounds per 1,000,000 off—pounds of copper or copper alloy forged parts alkaline cleaned	
Chromium	5.562	2.275
Copper	24.019	12.642
Lead	1.896	1.643
Nickel	24.272	16.055
Zinc	18.457	7.711
TTO	8.217	4.298
Oil and grease [1]	252.840	151.704

[1] For alternate monitoring.

(j) Subpart A—Alkaline Cleaning Bath PSES.

Pollutant or pollutant property	Maximum for any 1 day	Maximum for monthly average
	Metric units—mg/off-kg of copper or copper alloy alkaline cleaned English units—pounds per 1,000,000 off—pounds of copper or copper alloy alkaine cleaned	
Chromium	0.020	0.0084
Copper	0.088	0.046
Lead	0.0070	0.0060
Nickel	0.089	0.059
Zinc	0.068	0.028
TTO	0.030	0.015
Oil and grease [1]	0.93	0.56

[1] For alternate monitoring.

(k) Subpart A—Pickling Rinse PSES.

Pollutant or pollutant property	Maximum for any 1 day	Maximum for monthly average
	Metric units—mg/off-kg of copper or copper alloy pickled English units—pounds per 1,000,000 of pounds of copper or copper alloy pickled	
Chromium	0.574	0.235
Copper	2.481	1.306
Lead	0.195	0.169
Nickel	2.507	1.658
Zinc	1.906	0.796
TTO	0.848	0.444
Oil and grease [1]	26.120	15.672

[1] For alternate monitoring.

(l) Subpart A—Pickling Rinse for Forged Parts PSES.

Pollutant or pollutant property	Maximum for any 1 day	Maximum for monthly average
	Metric units—mg/off-kg of copper or copper alloy forged parts pickled English units—pounds per 1,000,000 off-pounds of copper or copper alloy forged parts pickled	
Chromium	1.723	0.705
Copper	7.444	3.918
Lead	0.587	0.509
Nickel	7.522	4.975
Zinc	5.720	2.389
TTO	2.546	1.332
Oil and grease [1]	78.360	47.016

[1] For alternate monitoring.

(m) Subpart A—Pickling Bath PSES.

Pollutant or pollutant property	Maximum for any 1 day	Maximum for monthly average
	Metric units—mg/off-kg of copper or copper alloy pickled English units—pounds per 1,000,000 off-pounds of copper or copper alloy pickled	
Chromium	0.051	0.020
Copper	0.220	0.116
Lead	0.017	0.015
Nickel	0.222	0.147
Zinc	0.169	0.070
TTO	0.075	0.039
Oil and grease [1]	2.320	1.392

[1] For alternate monitoring.

(n) Subpart A—Pickling Fume Scrubber PSES

Pollutant or pollutant property	Maximum for any 1 day	Maximum for monthly average
	Metric units—mg/off-kg of copper or copper alloy pickled English units—pounds per 1,000,000 off-pounds of copper or copper alloy pickled	
Chromium	0.275	0.112
Copper	1.189	0.626
Lead	0.093	0.081
Nickel	1.201	0.795
Zinc	0.913	0.381
TTO	0.406	0.212
Oil and grease [1]	12.520	7.512

[1] For alternate monitoring.

(o) Subpart A—Tumbling or Burnishing PSES.

Pollutant or pollutant property	Maximum for any 1 day	Maximum for monthly average
	Metric units—mg/off-kg of copper or copper alloy tumbled or burnished English units—pounds per 1,000,000 off-pounds of copper or copper alloy tumbled or burnished	
Chromium	0.256	0.104
Copper	1.107	0.583
Lead	0.087	0.075
Nickel	1.119	0.740
Zinc	0.851	0.355
TTO	0.378	0.198
Oil and grease [1]	11.660	6.996

[1] For alternate monitoring.

(p) Subpart A—Surface Coating PSES.

Pollutant or pollutant property	Maximum for any 1 day	Maximum for monthly average
	Metric units—mg/off-kg of copper or copper alloy surface coated English units—pounds per 1,000,000 off-pounds of copper or copper alloy surface coated	
Chromium	0.326	0.133
Copper	1.411	0.743
Lead	0.111	0.096
Nickel	1.426	0.943
Zinc	1.084	0.453
TTO	0.482	0.252
Oil and grease [1]	14.860	8.916

[1] For alternate monitoring.

(q) Subpart A—Miscellaneous Waste Streams PSES.

Pollutant or pollutant property	Maximum for any 1 day	Maximum for monthly average
	Metric units—mg/off-kg of copper or copper alloy formed English units—pounds per 1,000,000 off pounds of copper or copper alloy formed	
Chromium	0.009	0.003
Copper	0.041	0.021
Lead	0.003	0.002
Nickel	0.041	0.027
Zinc	0.031	0.013
TTO	0.014	0.007
Oil and grease [1]	0.436	0.261

[1] For alternate monitoring.

[48 FR 36957, Aug. 15, 1983, as amended at 51 FR 22521, June 20, 1986]

§ 468.15 Pretreatment standards for new sources (PSNS).

Except as provided in 40 CFR 403.7, any new source subject to this subpart which introduces pollutants into a publicly owned treatment works must comply with 40 CFR part 403 and achieve the following pretreatment sources for new sources:

(a) Subpart A—Hot Rolling Spent Lubricant PSNS.

Pollutant or pollutant property	Maximum for any one day	Maximum for monthly average
	Metric units—mg/off-kg of copper or copper alloy hot rolled English units—pounds per 1,000,000 off-pounds of copper or copper alloy hot rolled	
Chromium	0.038	0.015
Copper	0.131	0.062
Lead	0.010	0.0092
Nickel	0.056	0.038
Zinc	0.105	0.043
TTO	0.035	0.035
Oil and grease [1]	1.030	1.030

[1] For alternate monitoring.

(b) Subpart A—Cold Rolling Spent Lubricant PSNS.

Pollutant or pollutant property	Maximum for any one day	Maximum for monthly average
	Metric units—mg/off-kg of copper or copper alloy cold rolled English units—pounds per 1,000,000 off-pounds of copper or copper alloy cold rolled	
Chromium	0.140	0.056
Copper	0.485	0.231
Lead	0.037	0.034
Nickel	0.208	0.140
Zinc	0.386	0.159
TTO	0.128	0.128
Oil and grease [1]	3.790	3.790

[1] For alternate monitoring.

(c) Subpart A—Drawing Spent Lubricant PSNS.

Pollutant or pollutant property	Maximum for any 1 day	Maximum for monthly average
	Metric units—mg/off-kg of copper or copper alloy drawn English units—pounds per 1,000,000 off-pounds of copper or copper alloy drawn	
Chromium	0.031	0.012
Copper	0.108	0.051
Lead	0.0085	0.0076
Nickel	0.046	0.031
Zinc	0.086	0.035
TTO	0.028	0.028
Oil and grease [1]	0.850	0.850

[1] For alternate monitoring.

(d) Subpart A—Solution Heat Treatment PSNS.

Pollutant or pollutant property	Maximum for any 1 day	Maximum for monthly average
	Metric units—mg/off-kg of copper or copper alloy heat treated English units—pounds per 1,000,000 off-pounds of copper or copper alloy heat treated	
Chromium	0.239	0.096
Copper	0.826	0.394
Lead	0.064	0.058
Nickel	0.355	0.239
Zinc	0.658	0.271
TTO	0.219	0.219
Oil and grease [1]	6.460	6.460

[1] For alternate monitoring.

(e) Subpart A—Extrusion Heat Treatment PSNS.

Pollutant or pollutant property	Maximum for any 1 day	Maximum for monthly average
	Metric units—mg/off-kg of copper or copper alloy heat treated on an extrusion press English units—pounds per 1,000,000 off-pounds of copper or copper alloy heat treated on an extrusion press	
Chromium	0.00074	0.00030
Copper	0.0020	0.0010
Lead	0.00020	0.00018
Nickel	0.0010	0.00074
Zinc	0.0020	0.00084
TTO	0.00068	0.00068
Oil and grease [1]	0.020	0.020

[1] For alternate monitoring.

(f) Subpart A—Annealing with Water PSNS.

Pollutant or pollutant property	Maximum for any 1 day	Maximum for monthly average
	Metric units—mg/off-kg of copper or copper alloy annealed with water English units—pounds per 1,000,000 off-pounds of copper or copper alloy annealed with water	
Chromium	0.458	0.186
Copper	1.587	0.756
Lead	0.124	0.111
Nickel	0.682	0.458
Zinc	1.264	0.520
TTO	0.421	0.421
Oil and grease [1]	12.400	12.400

[1] For alternate monitoring.

(g) Subpart A—Annealing With Oil PSNS.

Pollutant or pollutant property	Maximum for any 1 day	Maximum for monthly average
	Metric units—mg/off-kg of copper or copper alloy annealed with oil English units—pounds per 1,000,000 off-pounds of copper or copper alloy annealed with oil	
Chromium	0	0
Copper	0	0
Lead	0	0
Nickel	0	0
Zinc	0	0
TTO	0	0
Oil and grease [1]	0	0

[1] For alternate monitoring.

(h) Subpart A—Alkaline Cleaning Rinse PSNS.

Pollutant or pollutant property	Maximum for any 1 day	Maximum for monthly average
	Metric units—mg/off-kg of copper or copper alloy alkaline cleaned English units—pounds per 1,000,000 off-pounds of copper or copper alloy alkaline cleaned	
Chromium	1.559	0.632
Copper	5.393	2.570
Lead	0.421	0.379
Nickel	2.317	1.559
Zinc	4.298	1.769
TTO	1.432	1.432
Oil and grease [1]	42.140	42.140

[1] For alternate monitoring.

(i) Subpart A—Alkaline Cleaning Rinse for Forged Parts PSNS.

Pollutant or pollutant property	Maximum for any 1 day	Maximum for monthly average
	Metric units—mg/off-kg of copper or copper alloy forged parts alkaline cleaned English units—pounds per 1,000,000 off-pounds of copper or copper alloy forged parts alkaline cleaned	
Chromium	4.677	1.896
Copper	16.181	7.711
Lead	1.264	1.137
Nickel	6.953	4.677
Zinc	12.894	5.309
TTO	4.298	4.298
Oil and grease [1]	126.420	126.420

[1] For alternate monitoring.

(j) Subpart A—Alkaline Cleaning Bath PSNS.

Pollutant or pollutant property	Maximum for any 1 day	Maximum for monthly average
	Metric units—mg/off-kg of copper or copper alloy alkaline cleaned English units—pounds per 1,000,000 off-pounds of copper or copper alloy alkaline cleaned	
Chromium	0.017	0.0070
Copper	0.059	0.028
Lead	0.0046	0.0042
Nickel	0.025	0.017
Zinc	0.047	0.019
TTO	0.015	0.015
Oil and grease [1]	0.46	0.46

[1] For alternate monitoring.

(k) Subpart A—Pickling Rinse PSNS.

Pollutant or pollutant property	Maximum for any 1 day	Maximum for monthly average
	Metric units—mg/off-kg of copper or copper alloy pickled English units—pounds per 1,000,000 off-pounds of copper or copper alloy pickled	
Chromium	0.216	0.087
Copper	0.748	0.356
Lead	0.058	0.052
Nickel	0.321	0.216
Zinc	0.596	0.245
TTO	0.198	0.198
Oil and grease [1]	5.850	5.850

[1] For alternate monitoring.

(l) Subpart A—Pickling Rinse for Forged Parts PSNS.

Pollutant or pollutant property	Maximum for any 1 day	Maximum for monthly average
	Metric units—mg/off-kg of copper or copper alloy forged parts pickled English units—pounds per 1,000,000 off-pounds of copper or copper alloy forged parts pickled	
Chromium	0.649	0.263
Copper	2.246	1.070
Lead	0.175	0.157
Nickel	0.965	0.649
Zinc	1.790	0.737
TTO	0.596	0.596
Oil and grease [1]	17.550	17.550

[1] For alternate monitoring.

(m) Subpart A—Pickling Bath PSNS.

Pollutant or pollutant property	Maximum for any 1 day	Maximum for monthly average
	Metric units—mg/off-kg of copper or copper alloy pickled English units—pounds per 1,000,000 off-pounds of copper or copper alloy pickled	
Chromium	0.042	0.017
Copper	0.148	0.070
Lead	0.011	0.010
Nickel	0.063	0.042
Zinc	0.118	0.048
TTO	0.039	0.039
Oil and grease [1]	1.160	1.160

[1] For alternate monitoring.

(n) Subpart A—Pickling Fume Scrubber PSNS.

Pollutant or pollutant property	Maximum for any 1 day	Maximum for monthly average
	Metric units—mg/off-kg of copper or copper alloy pickled English units—pounds per 1,000,000 off-pounds of copper or copper alloy pickled	
Chromium	0.231	0.093
Copper	0.801	0.381
Lead	0.062	0.056
Nickel	0.344	0.231
Zinc	0.638	0.262
TTO	0.212	0.212
Oil and grease [1]	6.260	6.260

[1] For alternate monitoring.

(o) Subpart A—Tumbling or Burnishing PSNS.

Pollutant or pollutant property	Maximum for any 1 day	Maximum for monthly average
	Metric units—mg/off-kg of copper or copper alloy tumbled or burnished English units—pounds per 1,000,000 off-pounds of copper or copper alloy tumbled or burnished	
Chromium	0.215	0.087
Copper	0.746	0.355
Lead	0.058	0.052
Nickel	0.320	0.215
Zinc	0.594	0.244
TTO	0.198	0.198
Oil and grease [1]	5.830	5.830

[1] For alternate monitoring.

(p) Subpart A—Surface Coating PSNS.

Pollutant or pollutant property	Maximum for any 1 day	Maximum for monthly average
	Metric units—mg/off-kg of copper or copper alloy surface coated English units—pounds per 1,000,000 off-pounds of copper or copper alloy surface coated	
Chromium	0.274	0.111
Copper	0.951	0.453
Lead	0.074	0.066
Nickel	0.408	0.274
Zinc	0.757	0.312
TTO	0.252	0.252
Oil and grease [1]	7.430	7.430

[1] For alternate monitoring.

(q) Subpart A—Miscellaneous Waste Streams PSNS.

Pollutant or pollutant property	Maximum for any 1 day	Maximum for monthly average
	Metric units—mg/off-kg of copper or copper alloy formed English units—pounds per 1,000,000 off-pounds of copper or copper alloy formed	
Chromium	0.008	0.003
Copper	0.027	0.013
Lead	0.0021	0.0019
Nickel	0.011	0.008
Zinc	0.022	0.009
TTO	0.007	0.007
Oil and grease [1]	0.218	0.218

[1] For alternate monitoring.

[48 FR 36957, Aug. 15, 1983; 48 FR 50719, Nov. 3, 1983]

§ 468.16 Effluent limitations representing the degree of effluent reduction attainable by the application of the best conventional pollution control technology (BCT). [Reserved]

Subpart B—Beryllium Copper Forming Subcategory

§ 468.20 Applicability; description of the beryllium copper forming subcategory.

This subpart applies to discharges of pollutants to waters of the United States, and introduction of pollutants into publicly owned treatment works from the forming of beryllium copper alloys.

[51 FR 7571, Mar. 5, 1986]

PART 469—ELECTRICAL AND ELECTRONIC COMPONENTS POINT SOURCE CATEGORY

Subpart A—Semiconductor Subcategory

Sec.
469.10 Applicability.
469.11 Compliance dates.
469.12 Specialized definitions.
469.13 Monitoring.
469.14 Effluent limitations representing the degree of effluent reduction attainable by the application of the best practicable control technology currently available (BPT).
469.15 Effluent limitations representing the degree of effluent reduction attainable by the application of the best available technology economically achievable (BAT).
469.16 Pretreatment standards for existing sources (PSES).
469.17 New source performance standards (NSPS).
469.18 Pretreatment standards for new sources (PSNS).
469.19 Effluent limitations representing the degree of effluent reduction attainable by the application of the best conventional pollution control technology (BCT).

Subpart B—Electronic Crystals Subcategory

469.20 Applicability.
469.21 Compliance dates.
469.22 Specialized definitions.
469.23 Monitoring.
469.24 Effluent limitations representing the degree of effluent reduction attainable

by the application of the best practicable control technology currently available (BPT).
469.25 Effluent limitations representing the degree of effluent reduction attainable by the application of the best available technology economically achievable (BAT).
469.26 Pretreatment standards for existing sources (PSES).
469.27 New source performance standards (NSPS).
469.28 Pretreatment standards for new sources (PSNS).
469.29 Effluent limitations representing the degree of effluent reduction attainable by the application of the best conventional pollution control technology (BCT).

Subpart C—Cathode Ray Tube Subcategory

469.30 Applicability.
469.31 Specialized definitions.
469.32 Monitoring requirements.
469.34 Pretreatment standards for existing sources (PSES).
469.35 New source performance standards (NSPS).
469.36 Pretreatment standards for new sources (PSNS).

Subpart D—Luminescent Materials Subcategory

469.40 Applicability.
469.41 Specialized definitions.
469.42 New source performance standards (NSPS).
469.43 Pretreatment standards for new sources (PSNS).

AUTHORITY: Secs. 301, 304, 306, 307, 308, and 501 of the Clean Water Act (the Federal Water Pollution Control Act Amendments of 1972, as amended by the Clean Water Act of 1977, 33 U.S.C. 1311, 1314, 1316, 1317, 1318, and 1361; 86 Stat. 816, Pub. L. 92–500; 91 Stat. 1567, Pub. L. 95–217, unless otherwise noted.

SOURCE: 48 FR 15394, Apr. 8, 1983, unless otherwise noted.

Subpart A—Semiconductor Subcategory

§ 469.10 Applicability.

The provisions of this subpart are applicable to discharges resulting from all process operations associated with the manufacture of semiconductors, except sputtering, vapor deposition, and electroplating.

§ 469.11 Compliance dates.

The compliance deadline for the BAT fluoride limitation shall be as soon as possible as determined by the permit writer, but no later than November 8, 1985. The compliance deadline for the BAT and BCT limitations for total toxic organics (TTO) and pH, respectively, is as soon as possible as determined by the permit writer, but in no event later than July 1, 1984. The compliance date for PSES for TTO is July 1, 1984.

§ 469.12 Specialized definitions.

The definitions in 40 CFR part 401 and the chemical analysis methods in 40 CFR part 136 apply to this subpart.

In addition,

(a) The term ''total toxic organics (TTO)'' means the sum of the concentrations for each of the following toxic organic compounds which is found in the discharge at a concentration greater than ten (10) micrograms per liter:

1,2,4 Trichlorobenzene chloroform
1,2 Dichlorobenzene
1,3, Dichlorobenzene
1,4, Dichlorobenzene ethylbenzene
1,1,1 Trichloroethane methylene chloride naphthalene
2 Nitrophenol phenol bis (2-ethylhexyl) phthalate tetrachloroethylene toluene trichloroethylene
2 Chlorophenol
2,4 Dichlorophenol
4 Nitrophenol pentachlorophenol di-n-butyl phthalate anthracene
1,2 Diphenylhydrazine isophorone butyl benzyl pthalate
1,1 Dichloroethylene
2,4,6 Trichlorophenol carbon tetrachloride
1,2 Dichloroethane
1,1,2 Trichloroethane dichlorobromomethane

(b) The term ''semiconductors'' means solid state electrical devices which perform functions such as information processing and display, power handling, and interconversion between light energy and electrical energy.

(c) The term ''manufacture of semiconductors'' means those processes, beginning with the use of crystal wafers, which lead to or are associated with the manufacture of semiconductor devices.

[48 FR 15394, Apr. 8, 1983, as amended at 48 FR 45250, Oct. 4, 1983]

§ 469.13 Monitoring.

(a) In lieu of monitoring for TTO, the permitting authority may allow direct dischargers to include the following certification as a ''comment'' on the Discharge Monitoring Report required by § 122.44 (i), formerly § 122.62(i): ''Based on my inquiry of the person or persons directly responsible for managing compliance with the permit limitation for total toxic organics (TTO), I certify that, to the best of my knowledge and belief, no dumping of concentrated toxic organics into the wastewaters has occurred since filing the last discharge monitoring report. I further certify that this facility is implementing the solvent management plan submitted to the permitting authority.''

(b) In requesting that no monitoring of TTO be required, the direct discharger shall submit a solvent management plan that specifies to the permitting authority's satisfaction the toxic organic compounds used; the method of disposal used instead of dumping, such as reclamation, contract hauling, or incineration; and procedures for assuring that toxic organics do not routinely spill or leak into the wastewater. The permitting authority shall incorporate the plan as a provision of the permit.

(c) In lieu of monitoring for TTO, the control authority may allow industrial users of POTWs to make the following certification as a comment to the periodic reports required by § 403.12(e): ''Based on my inquiry of the person or persons directly responsible for managing compliance with the pretreatment standard for total toxic organics (TTO), I certify that, to the best of my knowledge and belief, no dumping of concentrated toxic organics into the wastewaters has occurred since filing the last discharge monitoring report. I further certify that this facility is implementing the solvent management plan submitted to the control authority.''

(d) In requesting that no monitoring be required, industrial users of POTWs shall submit a solvent management plan that specifies to the control authority's satisfaction the toxic organic compounds used; the method of disposal used instead of dumping, such as reclamation, contract hauling, or incineration; and procedures for assuring that toxic organics do not routinely spill or leak into the wastewater.

(Approved by the Office of Management and Budget under control number 2040–0074)

[48 FR 15394, Apr. 8, 1983, as amended at 50 FR 4515, Jan. 31, 1985]

§ 469.14 Effluent limitations representing the degree of effluent reduction attainable by the application of the best practicable control technology currently available (BPT).

Except as provided in 40 CFR 125.30 through 125.32 any existing point source subject to this subpart must achieve the following effluent limitations representing the degree of effluent reduction attainable by the application of the best practicable control technology currently available (BPT):

SUBPART A—SEMICONDUCTOR BPT EFFLUENT LIMITATIONS

Pollutant or pollutant property	Maximum for any 1 day	Average of daily values for 30 consecutive days
	Milligrams per liter (mg/l)	
TTO [1]	1.37	([2])
pH	([3])	([3])

[1] Total toxic organics.
[2] Not applicable.
[3] Within the range of 6.0 to 9.0.

§ 469.15 Effluent limitations representing the degree of effluent reduction attainable by the application of the best available technology economically achievable (BAT).

Except as provided in 40 CFR 125.30 through 125.32 any existing point source subject to this subpart must achieve the following effluent limitations representing the degree of effluent reduction attainable by the application of the best available technology economically achievable (BAT):

SUBPART A—SEMICONDUCTOR BAT EFFLUENT LIMITATIONS

Pollutant or pollutant property	Maximum for any 1 day	Average of daily values for 30 consecutive days
	Milligrams per liter (mg/l)	
TTO [1]	1.37	([2])
Fluoride (T)	32.0	17.4

[1] Total toxic organics.
[2] Not applicable.

§ 469.16 Pretreatment standards for existing sources (PSES).

Except as provided in 40 CFR 403.7 and 403.13, any existing source subject to this subpart which introduces pollutants into a publicly owned treatment works must comply with 40 CFR part 403 and achieve the following pretreatment standards for existing sources (PSES):

(a)

SUBPART A—SEMICONDUCTOR PSES EFFLUENT LIMITATIONS

Pollutant or pollutant property	Maximum for any 1 day	Average of daily values for 30 consecutive days
	Milligrams per liter (mg/l)	
TTO [1]	1.37	([2])

[1] Total toxic organics.
[2] Not applicable.

(b) An existing source submitting a certification in lieu of monitoring pursuant to § 469.13 (c) and (d) of this regulation must implement the solvent management plan approved by the control authority.

§ 469.17 New source performance standards (NSPS).

Any new source subject to this subpart must achieve the following new source performance standards (NSPS).

SUBPART A—SEMICONDUCTOR NSPS EFFLUENT LIMITATIONS

Pollutant or pollutant property	Maximum for any 1 day	Average of daily values for 30 consecutive days
	Milligrams per liter (mg/l)	
TTO [1]	1.37	([2])
Fluoride (T)	32.0	17.4
pH	([2])	([3])

[1] Total toxic organics.
[2] Not applicable.
[3] Within the range of 6.0 to 9.0.

§ 469.18 Pretreatment standards for new sources (PSNS).

Except as provided in 40 CFR 403.7, any new source subject to this subpart which introduces pollutants into a publicly owned treatment works must comply with 40 CFR part 403 and achieve the following pretreatment standards for new sources (PSNS):

(a)

SUBPART A—SEMICONDUCTOR PSNS EFFLUENT LIMITATIONS

Pollutant or pollutant property	Maximum for any 1 day	Average of daily values for 30 consecutive days
	Milligrams per liter (mg/l)	
TTO [1]	1.37	([2])

[1] Total toxic organics.
[2] Not applicable.

(b) A new source submitting a certification in lieu of monitoring pursuant to § 469.13 (c) and (d) of this regulation must implement the solvent management plan approved by the control authority.

§ 469.19 Effluent limitations representing the degree of effluent reduction attainable by the application of the best conventional pollution control technology (BCT).

Except as provided in 40 CFR 125.30 through 125.32, any existing point source subject to this subpart must achieve the following effluent limitations representing the degree of effluent reduction attainable by the application of the best conventional pollution control technology (BCT):

SUBPART A—SEMICONDUCTOR BCT EFFLUENT LIMITATIONS

Pollutant or pollutant property	Maximum for any 1 day	Average of daily values for 30 consecutive days
pH	(1)	(1)

[1] Within the range 6.0 to 9.0.

Subpart B—Electronic Crystals Subcategory

§ 469.20 Applicability.

(a) The provisions of this subpart are applicable to discharges resulting from the manufacture of electronic crystals.

§ 469.21 Compliance dates.

The compliance date for the BAT fluoride limitation is as soon as possible as determined by the permit writer but in no event later than November 8, 1985. The compliance date for PSES for total toxic organics (TTO) is July 1, 1984 and for arsenic is November 8, 1985.

[48 FR 45250, Oct. 4, 1983, as amended at 49 FR 5923, Feb. 16, 1984]

§ 469.22 Specialized definitions.

The definitions in 40 CFR part 401 and the chemical analysis methods in 40 CFR part 136 apply to this subpart. In addition,

(a) The term ''total toxic organics (TTO)'' means the sum of the concentrations for each of the following toxic organic compounds which is found in the discharge at a concentration greater than ten (10) micrograms per liter:

1,2,4 Trichlorobenzene chloroform
1,2 Dichlorobenzene
1,3, Dichlorobenzene
1,4, Dichlorobenzene ethylbenzene
1,1,1 Trichloroethane methylene chloride naphthalene
2 Nitrophenol phenol bis (2-ethylhexyl) phthalate tetrachloroethylene toluene trichloroethylene
2 Chlorophenol
2,4 Dichlorophenol
4 Nitrophenol pentachlorophenol di-n-butyl phthalate anthracene
1,2 Diphenylhydrazine isophorone butyl benzyl pthalate
1,1 Dichloroethylene
2,4,6 Trichlorophenol carbon tetrachloride
1,2 Dichloroethane
1,1,2 Trichloroethane dichlorobromomethane

(b) The term ''electronic crystals'' means crystals or crystalline material which because of their unique structural and electronic properties are used in electronic devices. Examples of these crystals are crystals comprised of quartz, ceramic, silicon, gallium arsenide, and idium arsenide.

(c) The term ''manufacture of electronic crystals'' means the growing of crystals and/or the production of crystal wafers for use in the manufacture of electronic devices.

[48 FR 15394, Apr. 8, 1983, as amended at 48 FR 45250, Oct. 4, 1983]

§ 469.23 Monitoring.

The certification alternative to monitoring for Total Toxic Organics (TTO) described in § 469.13 (a), (b), (c), and (d) is applicable to this subpart.

(Approved by the Office of Management and Budget under control number 2040–0074)

[48 FR 15394, Apr. 8, 1983, as amended at 50 FR 4515, Jan. 31, 1985]

§ 469.24 Effluent limitations representing the degree of effluent reduction attainable by the application of the best practicable control technology currently available (BPT).

Except as provided in 40 CFR 125.30 through 32, any existing point source subject to this subpart must achieve the following effluent limitations representing the degree of effluent reduction attainable by the application of the best practicable control technology currently available (BPT):

SUBPART B—ELECTRONIC CRYSTALS BPT EFFLUENT LIMITATIONS

Pollutant or pollutant property	Maximum for any 1 day	Average of daily values for 30 consecutive days
	Milligrams per liter (mg/l)	
TTO [1]	1.37	(3)
Arsenic (T) [2]	2.09	0.83
Fluoride (T)	32.0	17.4
TSS	61.0	23.0
pH	(4)	(4)

[1] Total toxic organics.
[2] The arsenic (T) limitation only applies to manufacturers of gallium or indium arsenide crystals.
[3] Not applicable.
[4] Within the range of 6.0 to 9.0.

§ 469.25 Effluent limitations representing the degree of effluent reduction attainable by the application of the best available technology economically achievable (BAT).

Except as provided in 40 CFR 125.30 through 32, any existing point source subject to this subpart must achieve the following effluent limitations representing the degree of effluent reduction attainable by the application of the best available technology economically available (BAT):

SUBPART B—ELECTRONIC CRYSTALS BAT EFFLUENT LIMITATIONS

Pollutant or pollutant property	Maximum for any 1 day	Average of daily values for 30 consecutive days
	Milligrams per liter (mg/l)	
TTO [1]	1.37	([3])
Arsenic[2]	2.09	0.83
Fluoride	32.0	17.4

[1] Total toxic organics.
[2] The arsenic limitation only applies to manufacturers of gallium or indium arsenide crystals.
[3] Not applicable.

§ 469.26 Pretreatment standards for existing sources (PSES).

(a) Except as provided in 40 CFR 403.7 and 403.13, any existing source subject to this subpart which introduces pollutants into a publicly owned treatment works must comply with 40 CFR part 403 and achieve the following pretreatment standards for existing sources (PSES):

SUBPART B—ELECTRONIC CRYSTALS PSES EFFLUENT LIMITATIONS

Pollutant or pollutant property	Maximum for any 1 day	Average of daily values for 30 consecutive days
	Milligrams per liter (mg/l)	
TTO [1]	1.37	([2])
Arsenic (T) [3]	2.09	0.83

[1] Total toxic organics.
[2] Not applicable.
[3] The arsenic (T) limitation only applies to manufacturers of gallium or indium arsenide crystals.

(b) An existing source submitting a certification in lieu of monitoring pursuant to § 469.13 (c) and (d) of this regulation must implement the solvent management plan approved by the control authority.

[48 FR 15394, Apr. 8, 1983. Redesignated at 48 FR 45250, Oct. 4, 1983]

§ 469.27 New source performance standards (NSPS).

Any new source subject to this subpart must achieve the following new source performance standards (NSPS):

SUBPART B—ELECTRONIC CRYSTALS NSPS EFFLUENT LIMITATIONS

Pollutant or pollutant property	Maximum for any 1 day	Average of daily values for 30 consecutive days
	Milligrams per liter(mg/l)	
TTO [1]	1.37	([2])
Arsenic(T) [3]	2.09	0.83
Fluoride(T)	32.0	17.4
TSS	61.0	23.0
pH	([4])	([4])

[1] Total toxic organics.
[2] Not applicable.
[3] The arsenic(T) limitation only applies to manufacturers of gallium or indium arsenide crystals.
[4] Within the range of 6.0 to 9.0.

[48 FR 15394, Apr. 8, 1983. Redesignated at 48 FR 45250, Oct. 4, 1983]

§ 469.28 Pretreatment standards for new sources (PSNS).

Except as provided in 40 CFR 403.7, any new source subject to this subpart which introduces pollutants into a publicly owned treatment works must comply with 40 CFR part 403 and achieve the following pretreatment standards for new sources (PSNS):

(a)

SUBPART B—ELECTRONIC CRYSTALS PSNS EFFLUENT LIMITATIONS

Pollutant or pollutant property	Maximum for any 1 day	Average of daily values for 30 consecutive days
	Milligrams per liter (mg/l)	
TTO [1]	1.37	([2])
Arsenic (T) [3]	2.09	0.83

[1] Total toxic organics.
[2] Not applicable.
[3] The arsenic (T) limitation only applies to manufacturers of gallium or indium arsenide crystals.

(b) A new source submitting a certification in lieu of monitoring pursuant to § 469.13(c) and (d) of this regulation

must implement the solvent management plan approved by the control authority.

[48 FR 15394, Apr. 8, 1983. Redesignated at 48 FR 45250, Oct. 4, 1983]

§ 469.29 Effluent limitations representing the degree of effluent reduction attainable by the application of the best conventional pollution control technology (BCT).

Except as provided in 40 CFR 125.30 through 32, any existing point source subject to this subpart must achieve the following effluent limitations representing the degree of effluent reduction attainable by the application of the best conventional pollution control technology (BCT):

SUBPART B—ELECTRONIC CRYSTALS BCT EFFLUENT LIMITATIONS

Pollutant or pollutant property	Maximum for any 1 day	Average of daily values for 30 consecutive days
	Milligrams per liter (mg/l)	
TSS	61.0	23.0
pH	(1)	(1)

[1] Within the range of 6.0 to 9.0.

[48 FR 15394, Apr. 8, 1983. Redesignated at 48 FR 45250, Oct. 4, 1983]

Subpart C—Cathode Ray Tube Subcategory

AUTHORITY: Secs. 301, 304, 306, 307, 308, 309, and 501 of the Clean Water Act (the Federal Water Pollution Control Act Amendments of 1972, as amended by the Clean Water Act of 1977, 33 U.S.C. 1311, 1314, 1316, 1317, 1318, and 1361; 86 Stat. 816, Pub. L. 92–500; 91 Stat. 1567, Pub. L. 95–217).

SOURCE: 48 FR 55704, Dec. 14, 1983, unless otherwise noted.

§ 469.30 Applicability.

(a) The provisions of this subpart are applicable to discharges resulting from the manufacture of cathode ray tubes.

(b) The compliance deadline for PSES shall be no later than July 14, 1986.

[48 FR 55704, Dec. 14, 1983; 49 FR 1056, Jan. 9, 1984]

§ 469.31 Specialized definitions.

The definitions in 40 CFR part 401 and the chemical analysis methods in 40 CFR part 136 apply to this subpart. In addition,

(a) The term ''cathode ray tubes'' means electronic devices in which electrons focus through a vacuum to generate a controlled image on a luminescent surface. This definition does not include receiving and transmitting tubes.

(b) The term ''total toxic organics (TTO)'' means the sum of the concentrations for each of the following toxic organic compounds which is found in the discharge at a concentration greater than ten (10) micrograms per liter:

1,1,1 Chloroform
Trichloroethane
Methylene chloride
Bis (2–ethylhexyl) phthalate
Toluene
Trichloroethylene

§ 469.32 Monitoring requirements.

The certification alternative to monitoring for TTO specified in § 469.13 (a), (b), (c) and (d), is applicable to this subpart.

(Approved by the Office of Management and Budget under control number 2040–0074)

[48 FR 55704, Dec. 14, 1983, as amended at 49 FR 34823, Sept. 4, 1984]

§ 469.34 Pretreatment standards for existing sources (PSES).

Except as provided in 40 CFR 403.7 and 403.13, any existing source subject to this subpart which introduces pollutants into a publicly owned treatment works must comply with 40 CFR part 403 and achieve the following pretreatment standards for existing sources (PSES):

Pollutant or pollutant property	Maximum for any 1 day	Monthly average shall not exceed
	Milligrams per liter (mg/l)	
TTO [1]	1.58	.....
Cadmium	0.06	0.03
Chromium	0.65	0.30
Lead	1.12	0.41
Zinc	1.38	0.56
Fluoride	35.0	18.0

[1] Total toxic organics.

§ 469.35 New source performance standards (NSPS).

Any new source subject to this subpart must achieve the following new source performance standards (NSPS):

Pollutant or pollutant property	Maximum for any 1 day	Monthly average shall not exceed
	Milligrams per liter (mg/l)	
pH	(2)	(2)
TTO [1]	1.58	.....
Cadmium	0.06	0.03
Chromium	0.56	0.26
Lead	0.72	0.27
Zinc	0.80	0.33
Fluoride	35.0	18.0
TSS	46.0	24.0

[1] Total toxic organics.
[2] Within the range of 6.0 to 9.0.

§ 469.36 Pretreatment standards for new sources (PSNS).

Except as provided in 40 CFR 403.7, any new source subject to this subpart which introduces pollutants into a publicly owned treatment works must comply with 40 CFR part 403 and achieve the following pretreatment standards for new sources (PSNS):

Pollutant or pollutant property	Maximum for any 1 day	Monthly average shall not exceed
	Milligrams per liter (mg/l)	
TTO [1]	1.58	.....
Cadmium	0.06	0.03
Chromium	0.56	0.26
Lead	0.72	0.27
Zinc	0.80	0.33
Fluoride	35.0	18.0

[1] Total toxic organics.

Subpart D—Luminescent Materials Subcategory

AUTHORITY: Secs. 301, 304, 306, 307, 308, 309, and 501 of the Clean Water Act (the Federal Water Pollution Control Act Amendments of 1972, as amended by the Clean Water Act of 1977, 33 U.S.C. 1311, 1314, 1316, 1317, 1318, and 1361; 86 Stat. 816, Pub. L. 92–500; 91 Stat. 1567, Pub. L. 95–217).

SOURCE: 48 FR 55704, Dec. 14, 1983, unless otherwise noted.

§ 469.40 Applicability.

The provisions of this subpart are applicable to discharges resulting from the manufacture of luminescent materials.

§ 469.41 Specialized definitions.

The definitions in 40 CFR part 401 and the chemical analysis methods in 40 CFR part 136 apply to this subpart. In addition,

(a) The term ''luminescent materials'' shall mean materials that emit light upon excitation by such energy sources as photons, electrons, applied voltage, chemical reactions or mechanical energy and which are specifically used as coatings in fluorescent lamps and cathode ray tubes. Luminescent materials include, but are not limited to, calcium halophosphate, yttrium oxide, zinc sulfide, and zinc-cadmium sulfide.

§ 469.42 New source performance standards (NSPS).

Any new source subject to this subpart must achieve the following new source performance standards (NSPS):

Pollutant or pollutant property	Maximum for any 1 day	Monthly average shall not exceed
	Milligrams per liter (mg/l)	
pH	(1)	(1)
Cadmium	0.55	0.26
Antimony	0.10	0.04
Zinc	1.64	0.67
Fluoride	35.0	18.0
TSS	60.0	31.0

[1] Within the range of 6.0 to 9.0.

§ 469.43 Pretreatment standards for new sources (PSNS).

Except as provided in 40 CFR 403.7, any new source subject to this subpart which introduces pollutants into a publicly owned treatment works must comply with 40 CFR part 403 and achieve the following pretreatment standards for new sources (PSNS):

Pollutant property	For any 1 day	Monthly average shall not exceed
	Milligrams per liter (mg/l)	
Cadmium	0.55	0.26
Antimony	0.10	0.04
Zinc	1.64	0.67
Fluoride	35.0	18.0

PART 471—NONFERROUS METALS FORMING AND METAL POWDERS POINT SOURCE CATEGORY

GENERAL PROVISIONS

Sec.
471.01 Applicability.
471.02 General definitions.
471.03 Compliance date for PSES.

Subpart A—Lead-Tin-Bismuth Forming Subcategory

471.10 Applicability; description of the lead-tin-bismuth forming subcategory.
471.11 Effluent limitations representing the degree of effluent reduction attainable by the application of the best practicable control technology currently available (BPT).
471.12 Effluent limitations representing the degree of effluent reduction attainable by the application of the best available technology economically achievable (BAT).
471.13 New source performance standards (NSPS).
471.14 Pretreatment standards for existing sources (PSES).
471.15 Pretreatment standards for new sources (PSNS).
471.16 Effluent limitations representing the degree of effluent reduction attainable by the application of the best conventional pollutant control technology (BCT). [Reserved]

Subpart B—Magnesium Forming Subcategory

471.20 Applicability; description of the magnesium forming subcategory.
471.21 Effluent limitations representing the degree of effluent reduction attainable by the application of the best practicable control technology currently available (BPT).
471.22 Effluent limitations representing the degree of effluent reduction attainable by the application of the best available technology economically achievable (BAT).
471.23 New source performance standards (NSPS).
471.24 Pretreatment standards for existing sources (PSES).
471.25 Pretreatment standards for new sources (PSNS).
471.26 Effluent limitations representing the degree of effluent reduction attainable by the application of the best conventional pollutant control technology (BCT). [Reserved]

Subpart C—Nickel-Cobalt Forming Subcategory

471.30 Applicability; description of the nickel-cobalt forming subcategory.
471.31 Effluent limitations representing the degree of effluent reduction attainable by the application of the best practicable control technology currently available (BPT).
471.32 Effluent limitations representing the degree of effluent reduction attainable by the application of the best available technology economically achievable (BAT).
471.33 New source performance standards (NSPS).
471.34 Pretreatment standards for existing sources (PSES).
471.35 Pretreatment standards for new sources (PSNS).
471.36 Effluent limitations representing the degree of effluent reduction attainable by the application of the best conventional pollutant control technology (BCT). [Reserved]

Subpart D—Precious Metals Forming Subcategory

471.40 Applicability; description of the precious metals forming subcategory.
471.41 Effluent limitations representing the degree of effluent reduction attainable by the application of the best practicable control technology currently available (BPT).
471.42 Effluent limitations representing the degree of effluent reduction attainable by the application of the best available technology economically achievable (BAT).
471.43 New source performance standards (NSPS).
471.44 Pretreatment standards for existing sources (PSES).
471.45 Pretreatment standards for new sources (PSNS).
471.46 Effluent limitations representing the degree of effluent reduction attainable by the application of the best conventional pollutant control technology (BCT). [Reserved]

Subpart E—Refractory Metals Forming Subcategory

471.50 Applicability; description of the refractory metals forming subcategory.
471.51 Effluent limitations representing the degree of effluent reduction attainable by the application of the best practicable control technology currently available (BPT).
471.52 Effluent limitations representing the degree of effluent reduction attainable by the application of the best available

technology economically achievable (BAT).
471.53 New source performance standards (NSPS).
471.54 Pretreatment standards for existing sources (PSES).
471.55 Pretreatment standards for new sources (PSNS).
471.56 Effluent limitations representing the degree of effluent reduction attainable by the application of the best conventional pollutant control technology (BCT). [Reserved]

Subpart F—Titanium Forming Subcategory

471.60 Applicability; description of the titanium forming subcategory.
471.61 Effluent limitations representing the degree of effluent reduction attainable by the application of the best practicable control technology currently available (BPT).
471.62 Effluent limitations representing the degree of effluent reduction attainable by the application of the best available technology economically achievable (BAT).
471.63 New source performance standards (NSPS).
471.64 Pretreatment standards for existing sources (PSES).
471.65 Pretreatment standards for new sources (PSNS).
471.66 Effluent limitations representing the degree of effluent reduction attainable by the application of the best conventional pollutant control technology (BCT). [Reserved]

Subpart G—Uranium Forming Subcategory

471.70 Applicability; description of the uranium forming subcategory.
471.71 Effluent limitations representing the degree of effluent reduction attainable by the application of the best practicable control technology currently available (BPT).
471.72 Effluent limitations representing the degree of effluent reduction attainable by the application of the best available technology economically achievable (BAT).
471.73 New source performance standards (NSPS).
471.74 Pretreatment standards for existing sources (PSES). [Reserved]
471.75 Pretreatment standards for new sources (PSNS).
471.76 Effluent limitations representing the degree of effluent reduction attainable by the application of the best conventional pollutant control technology (BCT). [Reserved]

Subpart H—Zinc Forming Subcategory

471.80 Applicability; description of the zinc forming subcategory.
471.81 Effluent limitations representing the degree of effluent reduction attainable by the application of the best practicable control technology currently available (BPT).
471.82 Effluent limitations representing the degree of effluent reduction attainable by the application of the best available technology economically achievable (BAT).
471.83 New source performance standards (NSPS).
471.84 Pretreatment standards for existing sources (PSES). [Reserved]
471.85 Pretreatment standards for new sources (PSNS).
471.86 Effluent limitations representing the degree of effluent reduction attainable by the application of the best conventional pollutant control technology (BCT). [Reserved]

Subpart I—Zirconium-Hafnium Forming Subcategory

471.90 Applicability; description of the zirconium-hafnium forming subcategory.
471.91 Effluent limitations representing the degree of effluent reduction attainable by the application of the best practicable control technology currently available (BPT).
471.92 Effluent limitations representing the degree of effluent reduction attainable by the application of the best available technology economically achievable (BAT).
471.93 New source performance standards (NSPS).
471.94 Pretreatment standards for existing sources (PSES).
471.95 Pretreatment standards for new sources (PSNS).
471.96 Effluent limitations representing the degree of effluent reduction attainable by the application of the best conventional pollutant control technology (BCT). [Reserved]

Subpart J—Metal Powders Subcategory

471.100 Applicability; description of the metal powders subcategory.
471.101 Effluent limitations representing the degree of effluent reduction attainable by the application of the best practicable control technology currently available (BPT).
471.102 Effluent limitations representing the degree of effluent reduction attainable by the application of the best available technology economically achievable (BAT).

471.103 New source performance standards (NSPS).
471.104 Pretreatment standards for existing sources (PSES).
471.105 Pretreatment standards for new sources (PSNS).
471.106 Effluent limitations representing the degree of effluent reduction attainable by the application of the best conventional pollutant control technology (BCT). [Reserved]

AUTHORITY: Secs. 301, 304(b), (c), (e), and (g), 306(b) and (c), 307, 308, and 501 of the Clean Water Act (the Federal Water Pollution Control Act Amendments of 1972 as amended by the Clean Water Act of 1977) (the ''Act''); 33 U.S.C. 1311, 1314(b), (c), (e), and (g), 1316(b) and (c), and 1361; 86 Stat. 816, Pub. L. 92–500; 91 Stat. 1567, Pub. L. 95–217.

SOURCE: 50 FR 34270, Aug. 23, 1985, unless otherwise noted.

GENERAL PROVISIONS

§ 471.01 Applicability.

(a) This part applies to discharges of pollutants to waters of the United States and introduction of pollutants into a publicly owned treatment works from the forming of nonferrous metals (including nonferrous metal alloys), except beryllium, copper, and aluminum and their alloys. Aluminum alloys are defined as any alloy in which aluminum is the major constituent in percent by weight. Copper alloys are defined as any alloy in which copper is the major constituent in percent by weight except when copper is alloyed with precious metals. Any copper-precious metal alloy containing 30 percent or greater precious metal is considered a precious metal alloy for the purposes of this part. Beryllium alloys are any alloy in which beryllium is present at 0.1 percent or greater. This part applies to:

(1) Forming operations, including rolling (both hot and cold), extruding, forging, drawing, swaging, cladding, and tube reducing, and

(2) Ancillary operations performed as an integral part of the forming of these metals, including casting for subsequent forming, heat treatment, surface treatment, alkaline cleaning, solvent degreasing, product testing, surface coating, sawing, grinding, tumbling, burnishing, and wet air pollution control.

(b) This part also applies to discharges of pollutants to waters of the United States and introduction of pollutants into a publicly owned treatment works from mechanical metal powder production operations, forming of parts from metal powders, and associated ancillary operations (listed in paragraph (a)(2) of this section) of:

(1) Iron, copper, and aluminum, and their alloys; and

(2) The nonferrous metals and their alloys described in paragraph (a) of this section. This part does not regulate the production of metal powders by chemical means such as precipitation. The production of metal powder as the final step in refining metal is regulated under the Nonferrous Metals Manufacturing Point Source Category regulation, 40 CFR part 421.

(c) Surface treatment includes any chemical or electrochemical treatment applied to the surface of the metal. For the purposes of this regulation, surface treatment of metals is considered to be an integral part of the forming of metals whenever it is performed at the same plant site at which the metals are formed. Such surface treatment operations are not regulated under the Electroplating or Metal Finishing Point Source Category regulations, 40 CFR part 413 or 433, respectively.

(d) Casting is covered by this part when it is performed as an integral part of the metal forming process and takes place at the same plant site at which metals are formed. Such casting will not be regulated under the provisions of Metal Molding and Casting Point Source Category regulations, 40 CFR part 464.

(e) This part does not apply to the forming of the metals cadmium, chromium, gallium, germanium, indium, lithium, manganese, neodymium, or praseodymium.

§ 471.02 General definitions.

In addition to the definitions set forth in 40 CFR part 401, the following definitions apply to this part:

(a) ''Nonferrous metal'' is any pure metal other than iron or any metal alloy for which a metal other than iron is its major constituent in percent by weight.

(b) ''Forming'' is a set of manufacturing operations in which metals and alloys are made into semifinished products by hot or cold working.

(c) ''Alkaline cleaning'' uses a solution (bath), usually detergent, to remove lard, oil, and other such compounds from a metal surface. Alkaline cleaning is usually followed by a water rinse. The rinse may consist of single or multiple stage rinsing. For the purposes of this part, an alkaline cleaning operation is defined as a bath followed by a rinse, regardless of the number of rinse stages. Each alkaline cleaning bath and rinse combination is entitled to a discharge allowance.

(d) ''Atomization'' is the process in which a stream of water or gas impinges upon a molten metal stream, breaking it into droplets which solidify as powder particles.

(e) ''Burnishing'' is a surface finishing process in which minute surface irregularities are displaced rather than removed.

(f) ''Casting'' is pouring molten metal into a mold to produce an object of desired shape.

(g) ''Cladding'' or ''metal cladding'' is the art of producing a composite metal containing two or more layers that have been metallurgically bonded together by roll bonding (co-rolling), solder application (or brazing), or explosion bonding.

(h) ''Contact cooling water'' is any wastewater which contacts the metal workpiece or the raw materials used in forming metals for the purpose of removing heat from the metal.

(i) ''Continuous casting'' is the production of sheet, rod, or other long shapes by solidifying the metal while it is being poured through an open-ended mold.

(j) ''Degreasing'' is the removal of oils and greases from the surface of the metal workpiece. This process can be accomplished with detergents as in alkaline cleaning or by the use of solvents.

(k) ''Direct chill casting'' is the pouring of molten nonferrous metal into a water-cooled mold. Contact cooling water is sprayed onto the metal as it is dropped into the mold, and the metal ingot falls into a water bath at the end of the casting process.

(l) ''Drawing'' is the process of pulling a metal through a die or succession of dies to reduce the metal's diameter or alter its cross-sectional shape.

(m) ''Dye penetrant testing'' is a nondestructive method for finding discontinuities that are open to the surface of the metal. A dye is applied to the surface of metal and the excess is rinsed off. Dye that penetrates surface discontinuities will not be rinsed away thus marking these discontinuities.

(n) ''Emulsions'' are stable dispersions of two immiscible liquids. In the Nonferrous Metals Forming and Metal Powders Point Source category, this is usually an oil and water mixture.

(o) ''Electrocoating'' is the electrodeposition of a metallic or nonmetallic coating onto the surface of a workpiece.

(p) ''Extrusion'' is the application of pressure to a billet of metal, forcing the metal to flow through a die orifice.

(q) ''Forging'' is deforming metal, usually hot, with compressive force into desired shapes, with or without dies. Where dies are used, the metal is forced to take the shape of the die.

(r) ''Grinding'' is the process of removing stock from a workpiece by the use of a tool consisting of abrasive grains held by a rigid or semi-rigid grinder. Grinding includes surface finishing, sanding, and slicing.

(s) ''Heat treatment'' is the application of heat of specified temperature and duration to change the physical properties of the metal.

(t) ''Hot pressing'' is forming a powder metallurgy compact at a temperature high enough to effect concurrent sintering.

(u) ''Hydrotesting'' is the testing of piping or tubing by filling with water and pressurizing to test for integrity.

(v) ''Impregnation'' is the process of filling pores of a formed powder part, usually with a liquid such as a lubricant, or mixing particles of a nonmetallic substance in a matrix of metal powder.

(w) ''In-process control technology'' is the conservation of chemicals and water throughout the production operations to reduce the amount of wastewater to be discharged.

(x) ''Metal powder production'' operations are mechanical process operations which convert metal to a finely divided form.

(y) ''Milling'' is the mechanical treatment of a nonferrous metal to produce powder, or to coat one component of a powder mixture with another.

(z) ''Neat oil'' is a pure oil with no or few impurities added. In nonferrous metals forming, its use is mostly as a lubricant.

(aa) ''Powder forming'' includes forming and compressing powder into a fully dense finished shape, and is usually done within closed dies.

(bb) ''Precious metals'' include gold, platinum, palladium, and silver and their alloys. Any alloy containing 30 or greater percent by weight of precious metals is considered a precious metal alloy.

(cc) ''Product testing'' includes operations such as dye penetrant testing, hydrotesting, and ultrasonic testing.

(dd) ''Refractory metals'' includes the metals of columbium, tantalum, molybdenum, rhenium, tungsten and vanadium and their alloys.

(ee) ''Rolling'' is the reduction in thickness or diameter of a workpiece by passing it between lubricated steel rollers.

(ff) ''Roll bonding'' is the process by which a permanent bond is created between two metals by rolling under high pressure in a bonding mill (co-rolling).

(gg) ''Sawing'' is cutting a workpiece with a band, blade, or circular disc having teeth.

(hh) ''Shot casting'' is the production of shot by pouring molten metal in finely divided streams to form spherical particles.

(ii) ''Stationary casting'' is the pouring of molten metal into molds and allowing the metal to cool.

(jj) ''Surface treatment'' is a chemical or electrochemical treatment applied to the surface of a metal. Such treatments include pickling, etching, conversion coating, phosphating, and chromating. Surface treatment baths are usually followed by a water rinse. The rinse may consist of single or multiple stage rinsing. For the purposes of this part, a surface treatment operation is defined as a bath followed by a rinse, regardless of the number of stages. Each surface treatment bath, rinse combination is entitled to discharge allowance.

(kk) ''Swaging'' is a process in which a solid point is formed at the end of a tube, rod, or bar by the repeated blows of one or more pairs of opposing dies.

(ll) ''Tube reducing'' is an operation which reduces the diameter and wall thickness of tubing with a mandrel and a pair of rolls with tapered grooves.

(mm) ''Tumbling'' or ''barrel finishing'' is an operation in which castings, forgings, or parts pressed from metal powder are rotated in a barrel with ceramic or metal slugs or abrasives to remove scale, fins, or burrs. It may be done dry or with an aqueous solution.

(nn) ''Ultrasonic testing'' is a nondestructive test which applies sound, at a frequency above about 20 HJz, to metal, which has been immersed in liquid (usually water) to locate inhomogeneities or structural discontinuities.

(oo) ''Wet air pollution control scrubbers'' are air pollution control devices used to remove particulates and fumes from air by entraining the pollutants in a water spray.

(pp) ''Grab sample'' is a single sample which is collected at a time and place most representative of total discharge.

(qq) ''Composite sample'' is a sample composed of no less than eight grab samples taken over the compositing period.

(rr) A ''flow proportional composite sample'' is composed of grab samples collected continuously or discretely in proportion to the total flow at time of collection or to the total flow since collection of the previous grab sample. The grab volume or frequency of grab collection may be varied in proportion to flow.

(ss) The term ''control authority'' is defined as the POTW if it has an approved pretreatment program; in the absence of such a program, the NPDES State if it has an approved pretreatment program or EPA if the State does not have an approved program.

(tt) ''Continuous operations'' means that the industrial user introduces regulated wastewaters to the POTW throughout the operating hours of the

facility, except for infrequent shutdowns for maintenance, process changes, or other similar activities.

(uu) ''Intermittent operations'' means the industrial users does not have a continuous operation.

(vv) The term ''off-kg (off-lb)'' means the mass of metal or metal alloy removed from a forming operation at the end of a process cycle for transfer to a different machine or process.

§ 471.03 Compliance date for PSES.

The compliance date for PSES under this regulation is August 23, 1988.

Subpart A—Lead-Tin-Bismuth Forming Subcategory

§ 471.10 Applicability; description of the lead-tin-bismuth forming subcategory.

This subpart applies to discharges of pollutants to waters of the United States, and introductions of pollutants into publicly owned treatment works from the process operations of the lead-tin-bismuth forming subcategory.

§ 471.11 Effluent limitations representing the degree of effluent reduction attainable by the application of the best practicable control technology currently available (BPT).

Except as provided in 40 CFR 125.30 through 125.32, any existing point source subject to this subpart must achieve the following effluent limitations for the process operations representing the degree of effluent reduction attainable by the application of the best practicable control technology currently available (BPT):

(a) *Rolling spent emulsions.*

SUBPART A—BPT

Pollutant or pollutant property	Maximum for any 1 day	Maximum for monthly average
	mg/off-kg (pounds per million off-pounds) of lead-tin-bismuth rolled with emulsions	
Antimony	0.068	0.030
Lead	0.010	0.005
Oil and grease	0.468	0.281
TSS	0.960	0.457
pH	.....	(1)

[1] Within the range of 7.5 to 10.0 at all times.

(b) *Rolling spent soap solutions.*

SUBPART A—BPT

Pollutant or pollutant property	Maximum for any 1 day	Maximum for monthly average
	mg/off-kg (pounds per million off-pound) of lead-tin-bismuth rolled with soap solutions	
Antimony	0.125	0.055
Lead	0.019	0.009
Oil and grease	0.860	0.520
TSS	1.80	0.840
pH	.....	(1)

[1] Within the range of 7.5 to 10.0 at all times.

(c) *Drawing spent neat oils—Subpart A—BPT.* There shall be no discharge of process wastewater pollutants.

(d) *Drawing spent emulsions.*

SUBPART A—BPT

Pollutant or pollutant property	Maximum for any 1 day	Maximum for monthly average
	mg/off-kg (pounds per million off-pounds) of lead-tin-bismuth drawn with emulsions	
Antimony	0.076	0.034
Lead	0.011	0.005
Oil and grease	0.526	0.316
TSS	1.08	0.513
pH	.....	(1)

[1] Within the range of 7.5 to 10.0 at all times.

(e) *Drawing spent soap solutions.*

SUBPART A—BPT

Pollutant or pollutant property	Maximum for any 1 day	Maximum for monthly average
	mg/off-kg (pounds per million off-pounds) of lead-tin-bismuth drawn with soap solutions	
Antimony	0.022	0.010
Lead	0.003	0.002
Oil and grease	0.149	0.090
TSS	0.306	0.146
pH	.....	(1)

[1] Within the range of 7.5 to 10.0 at all times.

(f) *Extrusion press and solution heat treatment contact cooling water.*

SUBPART A—BPT

Pollutant or pollutant property	Maximum for any 1 day	Maximum for monthly average
	mg/off-kg (pounds per million off-pounds of lead-tin-bismuth heat treated	
Antimony	4.14	1.850
Lead	0.605	0.288
Oil and grease	28.80	17.30
TSS	59.10	28.10
pH	.....	(1)

[1] Within the range of 7.5 to 10.0 at all times.

(g) *Extrusion press hydraulic fluid leakage.*

SUBPART A—BPT

Pollutant or pollutant property	Maximum for any 1 day	Maximum for monthly average
	mg/off-kg (pounds per million off-pounds) of lead-tin-bismuth extruded	
Antimony	0.158	0.071
Lead	0.023	0.011
Oil and grease	1.10	0.660
TSS	2.26	1.07
pH	.....	(1)

[1] Within the range of 7.5 to 10.0 at all times.

(h) *Continuous strip casting contact cooling water.*

SUBPART A—BPT

Pollutant or pollutant property	Maximum for any 1 day	Maximum for monthly average
	mg/off-kg (pounds per million off-pounds) of lead-tin-bismuth cast by the continuous strip method	
Antimony	0.003	0.001
Lead	0.0004	0.0002
Oil and grease	0.020	0.012
TSS	0.041	0.020
pH	.....	(1)

[1] Within the range of 7.5 to 10.0 at all times.

(i) *Semi-continuous ingot casting contact cooling water.*

SUBPART A—BPT

Pollutant or pollutant property	Maximum for any 1 day	Maximum for monthly average
	mg/off-kg (pounds per million off-pounds) of lead-tin-bismuth ingot cast by the sem-continuous method	
Antimony	0.085	0.038
Lead	0.013	0.006
Oil and grease	0.588	0.353
TSS	1.21	0.574
pH	.....	(1)

[1] Within the range of 7.5 to 10.0 at all times.

(j) *Shot casting contact cooling water.*

SUBPART A—BPT

Pollutant or pollutant property	Maximum for any 1 day	Maximum for monthly average
	mg/off-kg (pounds per million off-pounds) of lead-tin-bismuth shot cast	
Antimony	0.107	0.048
Lead	0.016	0.008
Oil and grease	0.746	0.448
TSS	1.53	0.728
pH	.....	(1)

[1] Within the range of 7.5 to 10.0 at all times.

(k) *Shot-forming wet air pollution control scrubber blowdown.*

SUBPART A—BPT

Pollutant or pollutant property	Maximum for any 1 day	Maximum for monthly average
	mg/off-kg (pounds per million off-pounds) of lead-tin-bismuth shot formed	
Antimony	1.69	0.753
Lead	0.247	0.118
Oil and grease	11.8	7.06
TSS	24.1	11.5
pH	.....	(1)

[1] Within the range of 7.5 to 10.0 at all times.

(l) *Alkaline cleaning spent baths.*

SUBPART A—BPT

Pollutant or pollutant property	Maximum for any 1 day	Maximum for monthly average
	mg/off-kg (pounds per million off-pounds) of lead-tin-bismuth alkaline cleaned	
Antimony	0.345	0.154
Lead	0.051	0.024
Oil and grease	2.40	1.44
TSS	4.92	2.34
pH	.....	(1)

[1] Within the range of 7.5 to 10.0 at all times.

(m) *Alkaline cleaning rinse.*

SUBPART A—BPT

Pollutant or pollutant property	Maximum for any 1 day	Maximum for monthly average
	mg/off-kg (pounds per million off-pounds) of lead-tin-bismuth alkaline cleaned	
Antimony	6.78	3.02
Lead	0.991	0.472
Oil and grease	47.2	28.4
TSS	96.8	46.0
pH	.....	(1)

[1] Within the range of 7.5 to 10.0 at all times.

(n) *Swaging spent emulsions.*

SUBPART A—BPT

Pollutant or pollutant property	Maximum for any 1 day	Maximum for monthly average
	mg/off-kg (pounds per million off-pounds) of lead-tin-bismuth swaged with emulsion	
Antimony	0.005	0.002
Lead	0.0007	0.0004
Oil and grease	0.036	0.022
TSS	0.073	0.034
pH	.....	(1)

[1] Within the range of 7.5 to 10.0 at all times.

(o) *Degreasing spent solvents—Subpart A—BPT.* There shall be no discharge of process wastewater pollutants.

[50 FR 34270, Aug. 23, 1985; 51 FR 2884, Jan. 22, 1986]

§ 471.12 Effluent limitations representing the degree of effluent reduction attainable by the application of the best available technology economically achievable (BAT).

Except as provided in 40 CFR 125.30 through 125.32, any existing point source subject to this subpart must achieve the following effluent limitations representing the degree of effluent reduction attainable by the application of the best available technology economically achievable (BAT):

(a) *Rolling spent emulsions.*

SUBPART A—BAT

Pollutant or pollutant property	Maximum for any 1 day	Maximum for monthly average
	mg/off-kg (pounds per million off-pounds) of lead-tin-bismuth rolled with emulsion	
Antimony	0.067	0.030
Lead	0.010	0.005

(b) *Rolling spent soap solutions.*

SUBPART A—BAT

Pollutant or pollutant property	Maximum for any 1 day	Maximum for monthly average
	mg/off-kg (pounds per million off-pounds) of lead-tin-bismuth rolled with soap solutions	
Antimony	0.120	0.055
Lead	0.018	0.009

(c) *Drawing spent neat oils—Subpart A—BAT.* There shall be no discharge of process wastewater pollutants.

(d) *Drawing spent emulsions.*

SUBPART A—BAT

Pollutant or pollutant property	Maximum for any 1 day	Maximum for monthly average
	mg/off-kg (pounds per million off-pounds) of lead-tin-bismuth drawn with emulsions	
Antimony	0.080	0.034
Lead	0.011	0.005

(e) *Drawing spent soap solutions.*

SUBPART A—BAT

Pollutant or pollutant property	Maximum for any 1 day	Maximum for monthly average
	mg/off-kg (pounds per million off-pounds) of lead-tin-bismuth drawn with soap solutions	
Antimony	0.022	0.010
Lead	0.003	0.002

(f) *Extrusion press and solution heat treatment contact colling water.*

SUBPART A—BAT

Pollutant or pollutant property	Maximum for any 1 day	Maximum for monthly average
	mg/off-kg (pounds/per million off-pounds) of lead-tin-bismuth heat treated	
Antimony	0.414	0.185
Lead	0.061	0.030

(g) *Extrusion press hydraulic fluid leakage.*

SUBPART A—BAT

Pollutant or pollutant property	Maximum for any 1 day	Maximum for monthly average
	mg/off-kg (pounds/per million off-pounds) of lead-tin-bismuth extruded	
Antimony	0.158	0.071
Lead	0.023	0.011

(h) Continuous strip casting contact cooling water.

SUBPART A—BAT

Pollutant or pollutant property	Maximum for any 1 day	Maximum for monthly average
	mg/off-kg (pounds per million off-pounds) of lead-tin-bismuth cast by the continuous strip method	
Antimony	0.003	0.001
Lead	0.0004	0.0002

(i) *Semi-continuous ingot casting contact cooling water.*

SUBPART A—BAT

Pollutant or pollutant property	Maximum for any 1 day	Maximum for monthly average
	mg/off-kg (pounds per million off-pounds) of lead-tin-bismuth cast by the continuous strip method	
Antimony	0.009	0.004
Lead	0.001	0.0006

(j) *Shot casting contact cooling water.*

SUBPART A—BAT

Pollutant or pollutant property	Maximum for any 1 day	Maximum for monthly average
	mg/off-kg (pounds per million off-pounds) of lead-tin-bismuth shot cast	
Antimony	0.107	0.048
Lead	0.016	0.008

(k) *Shot-forming wet air pollution control scrubber blowdown.*

SUBPART A—BAT

Pollutant or pollutant property	Maximum for any 1 day	Maximum for monthly average
	mg/off-kg (pounds per million off-pounds) of lead-tin-bismuth shot formed	
Antimony	0.169	0.076
Lead	0.025	0.012

(l) *Alkaline cleaning spent baths.*

SUBPART A—BAT

Pollutant or pollutant property	Maximum for any 1 day	Maximum for monthly average
	mg/off-kg (pounds per million off-pounds) of lead-tin-bismuth alkaline cleaned	
Antimony	0.345	0.154
Lead	0.051	0.024

(m) *Alkaline cleaning rinse.*

SUBPART A—BAT

Pollutant or pollutant property	Maximum for any 1 day	Maximum for monthly average
	mg/off-kg (pounds per million off-pounds) of lead-tin-bismuth alkaline cleaned	
Antimony	0.678	0.302
Lead	0.099	0.047

(n) *Swaging spent emulsions.*

SUBPART A—BAT

Pollutant or pollutant property	Maximum for any 1 day	Maximum for monthly average
	mg/off-kg (pounds per million off-pounds) of lead-tin-bismuth swaged with emulsion	
Antimony	0.005	0.002
Lead	0.0008	0.0004

(o) *Degreasing spent solvents—Subpart A—BAT.* There shall be no discharge of process wastewater pollutants.

[50 FR 34270, Aug. 23, 1985; 51 FR 2884, Jan. 22, 1986]

§ 471.13 New source performance standards (NSPS).

Any new source subject to this subpart must achieve the following new source performance standards. The mass of pollutants in the lead-tin-bismuth forming operations' process wastewater shall not exceed the following values:

(a) *Rolling spent emulsions.*

SUBPART A—NSPS

Pollutant or pollutant property	Maximum for any 1 day	Maximum for monthly average
	mg/off-kg (pounds per million off-pounds) of lead-tin-bismuth rolled with emulsions	
Antimony	0.067	0.030
Lead	0.010	0.005
Oil and grease	0.468	0.281
TSS	0.960	0.457
pH	.....	(1)

[1] Within the range of 7.5 to 10.0 at all times.

(b) *Rolling spent soap solutions.*

SUBPART A—NSPS

Pollutant or pollutant property	Maximum for any 1 day	Maximum for monthly average
	mg/off-kg (pounds per million off-pounds) of lead-tin-bismuth rolled with soap solutions	
Antimony	0.120	0.055
Lead	0.018	0.009
Oil and grease	0.860	0.520
TSS	1.80	0.840
pH	.....	(1)

[1] Within the range of 7.5 to 10.0 at all times.

(c) *Drawing spent neat oils—Subpart A—NSPS.* There shall be no discharge of process wastewater pollutants.

(d) *Drawing spent emulsions.*

SUBPART A—NSPS

Pollutant or pollutant property	Maximum for any 1 day	Maximum for monthly average
	mg/off-kg (pounds per million off-pounds) of lead-tin-bismuth drawn with emulsions	
Antimony	0.076	0.034
Lead	0.011	0.005
Oil and grease	0.526	0.316
TSS	1.087	0.513
pH	.....	(1)

[1] Within the range of 7.5 to 10.0 at all times.

(e) *Drawing spent soap solutions.*

SUBPART A—NSPS

Pollutant or pollutant property	Maximum for any 1 day	Maximum for monthly average
	mg/off-kg (pounds per million off-pounds) of lead-tin-bismuth drawn with soap solutions	
Antimony	0.022	0.010
Lead	0.003	0.002
Oil and grease	0.149	0.090
TSS	0.306	0.146
pH	.....	(1)

[1] Within the range of 7.5 to 10.0 at all times.

(f) *Extrusion press and solution heat treatment contact cooling water.*

SUBPART A—NSPS

Pollutant or pollutant property	Maximum for any 1 day	Maximum for monthly average
	mg/off-kg (pounds per million off-pounds) of lead-tin-bismuth heat treated	
Antimony	0.414	0.185
Lead	0.061	0.030
Oil and grease	2.80	1.72
TSS	5.91	2.81
pH	.....	(1)

[1] Within the range of 7.5 to 10.0 at all times.

(g) *Extrusion press hydraulic fluid leakage.*

SUBPART A—NSPS

Pollutant or pollutant property	Maximum for any 1 day	Maximum for monthly average
	mg/off-kg (pounds per million off-pounds) of lead-tin-bismuth extruded	
Antimony	0.158	0.071
Lead	0.023	0.011
Oil and grease	1.10	0.660
TSS	2.26	1.07
pH	.....	(1)

[1] Within the range of 7.5 to 10.0 at all times.

(h) *Continuous strip casting contact cooling water.*

SUBPART A—NSPS

Pollutant or pollutant property	Maximum for any 1 day	Maximum for monthly average
	mg/off-kg (pounds per million off-pounds) of lead-tin-bismuth cast by the continuous strip method	
Antimony	0.003	0.001
Lead	0.0004	0.0002
Oil and grease	0.020	0.012
TSS	0.041	0.020
pH	.....	(1)

[1] Within the range of 7.5 to 10.0 at all times.

(i) *Semi-continuous ingot casting contact cooling water.*

SUBPART A—NSPS

Pollutant or pollutant property	Maximum for any 1 day	Maximum for monthly average
	mg/off-kg (pounds per million off-pounds) of lead-tin-bismuth ingot cast by the semi-continuous method	
Antimony	0.009	0.004
Lead	0.001	0.0006
Oil and grease	0.059	0.036
TSS	0.121	0.058
pH	.....	(1)

[1] Within the range of 7.5 to 10.0 at all times.

(j) *Shot casting contact cooling water.*

SUBPART A—NSPS

Pollutant or pollutant property	Maximum for any 1 day	Maximum for monthly average
	mg/off-kg (pounds per million off-pounds) of lead-tin-bismuth shot cast	
Antimony	0.107	0.048
Lead	0.016	0.008
Oil and grease	0.746	0.448
TSS	1.53	0.728
pH	.....	(1)

[1] Within the range of 7.5 to 10.0 at all times.

(k) *Shot-forming wet air pollution control scrubber blowdown.*

SUBPART A—NSPS

Pollutant or pollutant property	Maximum for any 1 day	Maximum for monthly average
	mg/off-kg (pounds per million off-pounds) of lead-tin-bismuth shot formed	
Antimony	0.169	0.076
Lead	0.025	0.012
Oil and grease	1.18	0.706
TSS	2.41	1.15
pH	.....	(1)

[1] Within the range of 7.5 to 10.0 at all times.

(l) *Alkaline cleaning spent baths.*

SUBPART A—NSPS

Pollutant or pollutant property	Maximum for any 1 day	Maximum for monthly average
	mg/off-kg (pounds per million off-pounds) of lead-tin-bismuth alkaline cleaned	
Antimony	0.345	0.154
Lead	0.051	0.024
Oil and grease	2.40	1.44
TSS	4.92	2.34
pH	.....	(1)

[1] Within the range of 7.5 to 10.0 at all times.

(m) *Alkaline cleaning rinse.*

SUBPART A—NSPS

Pollutant or pollutant property	Maximum for any 1 day	Maximum for monthly average
	mg/off-kg (pounds per million off-pounds) of lead-tin-bismuth alkaline cleaned	
Antimony	0.678	0.302
Lead	0.099	0.047
Oil and grease	4.72	2.84
TSS	9.68	4.60
pH	.....	(1)

[1] Within the range of 7.5 to 10.0 at all times.

(n) *Swaging spent emulsions.*

SUBPART A—NSPS

Pollutant or pollutant property	Maximum for any 1 day	Maximum for monthly average
	mg/off-kg (pounds per million off-pounds) of lead-tin-bismuth swaged with emulsion	
Antimony	0.005	0.002
Lead	0.0008	0.0004
Oil and grease	0.036	0.022
TSS	0.073	0.035
pH	.....	(1)

[1] Within the range of 7.5 to 10.0 at all times.

(o) *Degreasing spent solvents—Subpart A—NSPS.* There shall be no discharge of process wastewater pollutants.

[50 FR 34270, Aug. 23, 1985; 51 FR 2884, Jan. 22, 1986]

§ 471.14 Pretreatment standards for existing sources (PSES).

Except as provided in 40 CFR 403.7 and 403.13, any existing source subject to this subpart which introduces pollutants into a publicly owned treatment works must comply with 40 CFR part 403 and by August 23, 1988, achieve the pretreatment standards for existing sources (PSES). The mass of wastewater pollutants in lead-tin-bismuth forming process wastewater introduced into a POTW shall not exceed the following values:

(a) *Rolling spent emulsions.*

SUBPART A—PSES

Pollutant or pollutant property	Maximum for any 1 day	Maximum for monthly average
	mg/off-kg (pounds per million off-pounds) of lead-tin-bismuth rolled with emulsions	
Antimony	0.067	0.030
Lead	0.010	0.005

(b) *Rolling spent soap solutions.*

SUBPART A—PSES

Pollutant or pollutant property	Maximum for any 1 day	Maximum for monthly average
	mg/off-kg (pounds per million off-pounds) of lead-tin-bismuth rolled with soap solutions	
Antimony	0.120	0.055
Lead	0.018	0.009

(c) *Drawing spent neat oils—Subpart A—PSES.* There shall be no discharge of process wastewater pollutants.

(d) *Drawing spent emulsions.*

SUBPART A—PSES

Pollutant or pollutant property	Maximum for any 1 day	Maximum for monthly average
	mg/off-kg (pounds per million off-pounds) of lead-tin-bismuth drawn with emulsions	
Antimony	0.076	0.034
Lead	0.011	0.005

(e) *Drawing spent soaps solutions.*

SUBPART A—PSES

Pollutant or pollutant property	Maximum for any 1 day	Maximum for monthly average
	mg/off-kg (pounds per million off-pounds) of lead-tin-bismuth drawn with soap olutions	
Antimony	0.022	0.010
Lead	0.003	0.002

(f) *Extrusion press and solution heat treatment contact cooling water.*

SUBPART A—PSES

Pollutant or pollutant property	Maximum for any 1 day	Maximum for monthly average
	mg/off-kg (pounds per million off-pounds) of lead-tin-bismuth heat treated	
Antimony	0.414	0.185
Lead	0.061	0.029

(g) *Extrusion press hydraulic fluid leakage.*

SUBPART A—PSES

Pollutant or pollutant property	Maximum for any 1 day	Maximum for monthly average
	mg/off-kg (pounds per million off-pounds) of lead-tin-bismuth extruded	
Antimony	0.158	0.071
Lead	0.023	0.011

(h) *Continuous strip casting contact cooling water.*

SUBPART A—PSES

Pollutant or pollutant property	Maximum for any 1 day	Maximum for monthly average
	mg/off-kg (pounds per million off-pounds) of lead-tin-bismuth cast by the continuous strip method	
Antimony	0.003	0.001
Lead	0.0004	0.0002

(i) *Semi-continuous ingot casting contact cooling water.*

SUBPART A—PSES

Pollutant or pollutant property	Maximum for any 1 day	Maximum for monthly average
	mg/off-kg (pounds per million off-pounds) of lead-tin-bismuth cast by the semi-continuous strip method	
Antimony	0.009	0.004
Lead	0.001	0.0006

(j) *Shot casting contact cooling water.*

SUBPART A—PSES

Pollutant or pollutant property	Maximum for any 1 day	Maximum for monthly average
	mg/off-kg (pounds per million off-pounds) of lead-tin-bismuth shot cast	
Antimony	0.107	0.048
Lead	0.016	0.008

(k) *Shot-forming wet air pollution control scrubber blowdown.*

SUBPART A—PSES

Pollutant or pollutant property	Maximum for any 1 day	Maximum for monthly average
	mg/off-kg (pounds per million off-pounds) of lead-tin-bismuth shot formed	
Antimony	0.169	0.076
Lead	0.025	0.012

(l) *Alkaline Cleaning Spent Baths.*

SUBPART A—PSES

Pollutant or pollutant property	Maximum for any 1 day	Maximum for monthly average
	mg/off-kg (pounds per million off-pounds) of lead-tin-bismuth alkaline cleaned	
Antimony	0.345	0.154
Lead	0.051	0.024

(m) *Alkaline cleaning rinse.*

SUBPART A—PSES

Pollutant or pollutant property	Maximum for any 1 day	Maximum for monthly average
	mg/off-kg (pounds per million off-pounds) of lead-tin-bismuth alkaline cleaned	
Antimony	0.678	0.302
Lead	0.099	0.047

(n) *Swaging spent emulsions.*

SUBPART A—PSES

Pollutant or pollutant property	Maximum for any 1 day	Maximum for monthly average
	mg/off-kg (pounds per million off-pounds) of lead-tin-bismuth swaged with emulsion	
Antimony	0.005	0.002
Lead	0.0008	0.0004

(o) *Degreasing spent solvents—Subpart A—PSES.* There shall be no discharge of process wastewater pollutants.

[50 FR 34270, Aug. 23, 1985; 51 FR 2884, Jan. 22, 1986]

§ 471.15 Pretreatment standards for new sources (PSNS).

Except as provided in 40 CFR 403.7, any new sources subject to this subpart which introduces pollutants into a publicly owned treatment works must comply with 40 CFR part 403 and achieve the following pretreatment standards for new sources. The mass of wastewater pollutants in lead-tin-bismuth forming process wastewater introduced into a POTW shall not exceed the following values:

(a) *Rolling spent emulsions.*

SUBPART A—PSNS

Pollutant or pollutant property	Maximum for any 1 day	Maximum for monthly average
	mg/off-kg (pounds per million off-pounds) of lead-tin-bismuth rolled with emulsions	
Antimony	0.067	0.030
Lead	0.010	0.005

(b) *Rolling spent soap solutions.*

SUBPART A—PSNS

Pollutant or pollutant property	Maximum for any 1 day	Maximum for monthly average
	mg/off-kg (pounds per million off-pounds) of lead-tin-bismuth rolled with soap solutions	
Antimony	0.120	0.055
Lead	0.018	0.009

(c) *Drawing spent neat oils—Subpart A—PSNS.* There shall be no discharge of process wastewater pollutants.

(d) *Drawing spent emulsions.*

SUBPART A—PSNS

Pollutant or pollutant property	Maximum for any 1 day	Maximum for monthly average
	mg/off-kg (pounds per million off-pounds) of lead-tin-bismuth drawn with emulsions	
Antimony	0.076	0.034
Lead	0.011	0.005

(e) *Drawing spent soap solutions.*

SUBPART A—PSNS

Pollutant or pollutant property	Maximum for any 1 day	Maximum for monthly average
	mg/off-kg (pounds per million off-pounds) of lead-tin-bismuth drawn with soap solutions	
Antimony	0.022	0.010
Lead	0.003	0.002

(f) *Extrusion press and solution heat treatment contact cooling water.*

SUBPART A—PSNS

Pollutant or pollutant property	Maximum for any 1 day	Maximum for monthly average
	mg/off-kg (pounds per million off-pounds) of lead-tin-bismuth heat treated	
Antimony	0.414	0.185
Lead	0.061	0.029

(g) *Extrusion press hydraulic fluid leakage.*

SUBPART A—PSNS

Pollutant or pollutant property	Maximum for any 1 day	Maximum for monthly average
	mg/off-kg (pounds per million off-pounds) of lead-tin-bismuth extruded	
Antimony	0.158	0.071
Lead	0.023	0.011

(h) *Continuous strip casting contact cooling water.*

SUBPART A—PSNS

Pollutant or pollutant property	Maximum for any 1 day	Maximum for monthly average
	mg/off-kg (pounds per million off-pounds) of lead-tin-bismuth cast by the continuous strip method	
Antimony	0.003	0.001
Lead	0.0004	0.0002

(i) *Semi-continuous ingot casting contact cooling water.*

SUBPART A—PSNS

Pollutant or pollutant property	Maximum for any 1 day	Maximum for monthly average
	mg/off-kg (pounds per million off-pounds) of lead-tin-bismuth ingot cast by the semi-continuous method	
Antimony	0.009	0.004
Lead	0.001	0.0006

(j) *Shot casting contact cooling water.*

SUBPART A—PSNS

Pollutant or pollutant property	Maximum for any 1 day	Maximum for monthly average
	mg/off-kg (pounds per million off-pounds) of lead-tin-bismuth shot cast	
Antimony	0.107	0.048
Lead	0.016	0.008

(k) *Shot-forming wet air pollution control scrubber blowdown.*

SUBPART A—PSNS

Pollutant or pollutant property	Maximum for any 1 day	Maximum for monthly average
	mg/off-kg (pounds per million off-pounds) of lead-tin-bismuth shot formed	
Antimony	0.169	0.076
Lead	0.025	0.012

(l) *Alkaline cleaning spent baths.*

SUBPART A—PSNS

Pollutant or pollutant property	Maximum for any 1 day	Maximum for monthly average
	mg/off-kg (pounds per million off-pounds) of lead-tin-bismuth alkaline cleaned	
Antimony	0.345	0.154
Lead	0.051	0.024

(m) *Alkaline cleaning rinse.*

SUBPART A—PSNS

Pollutant or pollutant property	Maximum for any 1 day	Maximum for monthly average
	mg/off-kg (pounds per million off-pounds) of lead-tin-bismuth alkaline cleaned	
Antimony	0.678	0.302
Lead	0.099	0.047

(n) *Swaging spent emulsions.*

SUBPART A—PSNS

Pollutant or pollutant property	Maximum for any 1 day	Maximum for monthly average
	mg/off-kg (pounds per million off-pounds) of lead-tin-bismuth swaged with emulsion	
Antimony	0.005	0.003
Lead	0.0008	0.0004

(o) *Degreasing spent solvents—Subpart A—PSNS.* There shall be no discharge of process wastewater pollutants.

[50 FR 34270, Aug. 23, 1985; 51 FR 2884, Jan. 22, 1986]

§ 471.16 Effluent limitations representing the degree of effluent reduction attainable by the application of the best conventional pollutant control technology (BCT). [Reserved]

Subpart B—Magnesium Forming Subcategory

§ 471.20 Applicability; description of the magnesium forming subcategory.

This subpart applies to discharges of pollutants to waters of the United States, and introductions of pollutants into publicly owned treatment works from the process operations of the magnesium forming subcategory.

§ 471.21 Effluent limitations representing the degree of effluent reduction attainable by the application of the best practicable control technology currently available (BPT).

Except as provided in 40 CFR 125.30 through 125.32, any existing point source subject to this subpart must achieve the following effluent limitations for the process operations representing the degree of effluent reduction attainable by the application of the best practicable control technology currently available (BPT):

(a) *Rolling spent emulsions.*

SUBPART B—BPT

Pollutant or pollutant property	Maximum for any 1 day	Maximum for monthly average
	mg/off-kg (pounds per million off-pounds) of magnesium rolled with emulsions	
Chromiun	0.033	0.014
Zinc	0.109	0.046
Ammonia	9.95	4.37
Fluoride	4.440	1.97
Oil and grease	1.49	0.895
TSS	3.06	1.46
pH		(1)

[1] Within the range of 7.5 to 10.0 at all times.

(b) *Forging spent lubricants—Subpart B—BPT.* There shall be no discharge of process wastewater pollutants.

(c) *Forging contact cooling water.*

SUBPART B—BPT

Pollutant or pollutant property	Maximum for any 1 day	Maximum for monthly average
	mg/off-kg (pounds per million off-pounds) of forged magnesium cooled with water	
Chromium	1.27	0.520
Zinc	4.22	1.77
Ammonia	385	170
Fluoride	172	76.3
Oil and grease	57.8	34.7
TSS	119	56.4
pH		(1)

[1] Within the range of 7.5 to 10.0 at all times.

(d) *Forging equipment cleaning wastewater.*

SUBPART B—BPT

Pollutant or pollutant property	Maximum for any 1 day	Maximum for monthly average
	mg/off-kg (pounds per million off-pounds) of magnesium forged	
Chromium	0.018	0.007
Zinc	0.059	0.025
Ammonia	5.32	2.34
Fluoride	2.38	1.06
Oil and grease	0.798	0.479
TSS	1.64	0.778
pH		(1)

[1] Within the range of 7.5 to 10.0 at all times.

(e) *Direct chill casting contact cooling water.*

SUBPART B—BPT

Pollutant or pollutant property	Maximum for any 1 day	Maximum for monthly average
	mg/off-kg (pounds per million off-pounds) of magnesium cast with direct chill methods	
Chromium	1.74	0.711
Zinc	5.77	2.41
Ammonia	527	232
Fluoride	235	105
Oil and grease	79.0	47.4
TSS	162	77.1
pH	.....	(1)

[1] Within the range of 7.5 to 10.0 at all times.

(f) *Surface treatment spent baths.*

SUBPART B—BPT

Pollutant or pollutant property	Maximum for any 1 day	Maximum for monthly average
	mg/off-kg (pounds per million off-pounds) of magnesium surface treated	
Chromium	0.205	0.084
Zinc	0.681	0.285
Ammonia	62.1	27.3
Fluoride	27.8	12.3
Oil and grease	9.32	5.59
TSS	19.1	9.09
pH	.....	(1)

[1] Within the range of 7.5 to 10.0 at all times.

(g) *Surface treatment rinse.*

SUBPART B—BPT

Pollutant or pollutant property	Maximum for any 1 day	Maximum for monthly average
	mg/off-kg (pounds per million off-pounds) of magnesium surface treated	
Chromium	8.32	3.4
Zinc	27.6	11.5
Ammonia	2520	1110
Fluoride	1130	499
Oil and grease	378	227
TSS	775	369
pH	.....	(1)

[1] Within the range of 7.5 to 10.0 at all times.

(h) *Sawing or grinding spent emulsions.*

SUBPART B—BPT

Pollutant or pollutant property	Maximum for any 1 day	Maximum for monthly average
	mg/off-kg (pounds per million off-pounds) of magnesium sawed or ground	
Chromium	0.009	0.004
Zinc	0.029	0.012
Ammonia	2.60	1.15
Fluoride	1.16	0.515
Oil and grease	0.390	0.234
TSS	0.800	0.381
pH	.....	(1)

[1] Within the range of 7.5 to 10.0 at all times.

(i) *Degreasing spent solvents—Subpart B—BPT.* There shall be no discharge of process wastewater pollutants.

(j) *Wet air pollution control scrubber blowdown.*

SUBPART B—BPT

Pollutant or pollutant property	Maximum for any 1 day	Maximum for monthly average
	mg/off-kg (pounds per million off-pounds) of magnesium sanded and repaired or forged	
Chromium	0.273	0.112
Zinc	0.904	0.378
Ammonia	82.5	36.3
Fluoride	36.9	16.4
Oil and grease	12.4	7.43
TSS	25.4	12.1
pH	.....	(1)

[1] Within the range of 7.5 to 10.0 at all times.

§ 471.22 Effluent limitations representing the degree of effluent reduction attainable by the application of the best available technology economically achievable (BAT).

Except as provided in 40 CFR 125.30 through 125.32, any existing point source subject to this subpart must achieve the following effluent limitations representing the degree of effluent reduction attainable by the application of the best available technology economically achievable (BAT):

(a) *Rolling spent emulsions.*

SUBPART B—BAT

Pollutant or pollutant property	Maximum for any 1 day	Maximum for monthly average
	mg/off-kg (pounds per million off-pounds) of magnesium rolled with emulsions	
Chromium	0.033	0.014
Zinc	0.109	0.046
Ammonia	9.95	4.37
Fluoride	4.44	1.97

(b) *Forging spent lubricants*—Subpart B—BAT. There shall be no discharge of process wastewater pollutants.

(c) *Forging contact cooling water.*

SUBPART B—BAT

Pollutant or pollutant property	Maximum for any 1 day	Maximum for monthly average
	mg/off-kg (pounds per million off-pounds) of forged magnesium cooled with water	
Chromium	0.127	0.052
Zinc	0.422	0.177
Ammonia	38.5	17.0
Fluoride	17.2	7.63

(d) *Forging equipment cleaning wastewater.*

SUBPART B—BAT

Pollutant or pollutant property	Maximum for any 1 day	Maximum for monthly average
	mg/off-kg (pounds per million off-pounds) of magnesium forged	
Chromium	0.002	0.0007
Zinc	0.006	0.003
Ammonia	0.532	0.234
Fluoride	0.238	0.106

(e) *Direct chill casting contact cooling water.*

SUBPART B—BAT

Pollutant or pollutant property	Maximum for any 1 day	Maximum for monthly average
	mg/off-kg (pounds per million off-pounds) of magnesium cast with direct chill methods	
Chromium	1.74	0.711
Zinc	5.77	2.41
Ammonia	527	232
Fluoride	235	105

(f) *Surface treatment spent baths.*

SUBPART B—BAT

Pollutant or pollutant property	Maximum for any 1 day	Maximum for monthly average
	mg/off-kg (pounds per million off-pounds) of magnesium surface treated	
Chromium	0.205	0.084
Zinc	0.681	0.285
Ammonia	62.1	27.3
Fluoride	27.8	12.3

(g) *Surface treatment rinse.*

SUBPART B—BAT

Pollutant or pollutant property	Maximum for any 1 day	Maximum for monthly average
	mg/off-kg (pounds per million off-pounds) of magnesium surface treated	
Chromium	0.832	0.340
Zinc	2.76	1.16
Ammonia	252	111
Fluoride	113	49.9

(h) *Sawing or grinding spent emulsions.*

SUBPART B—BAT

Pollutant or pollutant property	Maximum for any 1 day	Maximum for monthly average
	mg/off-kg (pounds per million off-pounds) of magnesium sawed or ground	
Chromium	0.009	0.004
Zinc	0.029	0.012
Ammonia	2.60	1.15
Fluoride	1.16	0.515

(i) *Degreasing spent solvents—Subpart B—BAT.* There shall be no discharge of process wastewater pollutants.

(j) *Wet air pollution control scrubber blowdown.*

SUBPART B—BAT

Pollutant or pollutant property	Maximum for any 1 day	Maximum for monthly average
	mg/off-kg (pounds per million off-pounds) of magnesium sanded and repaired or forged	
Chromium	0.273	0.112
Zinc	0.904	0.378
Ammonia	82.5	36.3
Fluoride	36.9	16.4

§ 471.23 New source performance standards (NSPS).

Any new source subject to this subpart must achieve the following new source performance standards. The mass of pollutants in the magnesium forming process wastewater shall not exceed the following values:

(a) *Rolling spent emulsions.*

SUBPART B—NSPS

Pollutant or pollutant property	Maximum for any 1 day	Maximum for monthly average
	mg/off/kg (pounds per million off-pounds) of magnesium rolled with emulsions	
Chromium	0.028	0.011
Zinc	0.076	0.032
Ammonia	9.95	4.37
Fluoride	4.44	1.97
Oil and grease	0.746	0.746
TSS	1.12	0.895
pH	(1)	(1)

1 Within the range of 7.5 to 10.0 at all times.

(b) *Forging spent lubricants—Subpart B—NSPS.* There shall be no discharge of process wastewater pollutants.

(c) *Forging contact cooling water.*

SUBPART B—NSPS

Pollutant or pollutant property	Maximum for any 1 day	Maximum for monthly average
	mg/off/kg (pounds per million off-pounds) of forged magnesium cooled with water	
Chromium	0.107	0.044
Zinc	0.295	0.122
Ammonia	38.5	17.0
Fluoride	17.2	7.63
Oil and grease	2.89	2.89
TSS	4.34	3.47
pH	(1)	(1)

1 Within the range of 7.5 to 10.0 at all times.

(d) *Forging equipment cleaning wastewater.*

SUBPART B—NSPS

Pollutant or pollutant property	Maximum for any 1 day	Maximum for monthly average
	mg/off/kg (pounds per million off-pounds) of magnesium forged	
Chromium	0.002	0.0006
Zinc	0.004	0.002
Ammonia	0.532	0.234
Fluoride	0.238	0.106
Oil and grease	0.040	0.040
TSS	0.060	0.048
pH	(1)	(1)

1 Within the range of 7.5 to 10.0 at all times.

(e) *Direct chill casting contact cooling water.*

SUBPART B—NSPS

Pollutant or pollutant property	Maximum for any 1 day	Maximum for monthly average
	mg/off-kg (pounds per million off-pounds) of magnesium cast with direct chill methods	
Chromium	1.46	0.593
Zinc	4.03	1.66
Ammonia	527	232
Fluoride	235	105
Oil and grease	39.5	39.5
TSS	59.3	47.4
pH	(1)	(1)

1 Within the range of 7.5 to 10.0 at all times.

(f) *Surface treatment spent baths.*

SUBPART B—NSPS

Pollutant or pollutant property	Maximum for any 1 day	Maximum for monthly average
	mg/off-kg (pounds per million off-pounds) of magnesium surface treated	
Chromium	0.173	0.070
Zinc	0.476	0.196
Ammonia	62.1	27.3
Fluoride	27.8	12.3
Oil and grease	4.66	4.66
TSS	6.99	5.60
pH	(1)	(1)

1 Within the range of 7.5 to 10.0 at all times

(g) *Surface treatment rinse.*

SUBPART B—NSPS

Pollutant or pollutant property	Maximum for any 1 day	Maximum for monthly average
	mg/off-kg (pound pers million off-pounds) of magnesium surface treated	
Chromium	0.700	0.284
Zinc	1.93	0.794
Ammonia	252	111
Fluoride	113	49
Oil and grease	18.9	18.9
TSS	28.4	22.7
pH	(1)	(1)

[1] Within the range of 7.5 to 10.0 at all times

(h) *Sawing or grinding spent emulsions.*

SUBPART B—NSPS

Pollutant or pollutant property	Maximum for any 1 day	Maximum for monthly average
	mg/off-kg (pounds per million off-pounds) of magnesium sawed or ground	
Chromium	0.007	0.003
Zinc	0.020	0.008
Ammonia	2.60	1.15
Fluoride	1.16	0.515
Oil and grease	0.195	0.195
TSS	0.293	0.234
pH	(1)	(1)

[1] Within the range of 7.5 to 10.0 at all times.

(i) *Degreasing spent Solvents—Subpart B—NSPS.* There shall be no discharge of process wastewater pollutants.

(j) *Wet air pollution control scrubber blowdown.*

SUBPART B—NSPS

Pollutant or pollutant property	Maximum for any 1 day	Maximum for monthly average
	mg/off-kg (pounds per million off-pounds) of magnesium sanded and repaired or forged	
Chromium	0.229	0.093
Zinc	0.632	0.260
Ammonia	82.5	36.3
Fluoride	36.9	16.4
Oil and grease	6.19	6.19
TSS	9.29	7.43
pH	(1)	(1)

[1] Within the range of 7.5 to 10.0 at all times.

[50 FR 34270, Aug. 23, 1985; 51 FR 2884, Jan. 22, 1986]

§ 471.24 Pretreatment standards for existing sources (PSES).

Except as provided in 40 CFR 403.7 and 403.13, any existing source subject to this subpart which introduces pollutants into a publicly owned treatment works must comply with 40 CFR part 403 and by August 23, 1988 achieve the following pretreatment standards for existing sources (PSES). The mass of wastewater pollutants in magnesium forming process wastewater introduced into a POTW shall not exceed the following values:

(a) *Rolling spent emulsions.*

SUBPART B—PSES

Pollutant or pollutant property	Maximum for any 1 day	Maximum for monthly average
	mg/off-kg (pounds per million off-pounds) of magnesium rolled with emulsions	
Chromium	0.033	0.014
Zinc	0.109	0.046
Ammonia	9.95	4.37
Fluoride	4.44	1.97

(b) *Forging spent lubricants—Subpart B—PSE.* There shall be no discharge of process wastewater pollutants.

(c) *Forging contact cooling water.*

SUBPART B—PSES

Pollutant or pollutant property	Maximum for any 1 day	Maximum for monthly average
	mg/off-kg (pounds per million off-pounds) of magnesium cooled with water	
Chromium	0.127	0.052
Zinc	0.422	0.177
Ammonia	38.5	17.0
Fluoride	17.2	7.63

(d) *Forging equipment cleaning wastewater.*

SUBPART B—PSES

Pollutant or pollutant property	Maximum for any 1 day	Maximum for monthly average
	mg/off-kg (pounds per million off-pounds) of magnesium forged	
Chromium	0.002	0.0007
Zinc	0.006	0.003
Ammonia	0.532	0.234
Fluoride	0.238	0.106

(e) *Direct chill casting contact cooling water.*

SUBPART B—PSES

Pollutant or pollutant property	Maximum for any 1 day	Maximum for monthly average
	mg/off-kg (pounds per million off-pounds) of magnesium cast with direct chill methods	
Chromiun	1.74	0.711
Zinc	5.77	2.41
Ammonia	527	232
Fluoride	235	105

(f) *Surface treatment spent baths.*

SUBPART B—PSES

Pollutant or pollutant property	Maximum for any 1 day	Maximum for monthly average
	mg/off-kg (pounds per million off-pounds) of magnesium surface treated	
Chromiun	0.205	0.084
Zinc	0.681	0.285
Ammonia	62.1	27.3
Fluoride	27.8	12.3

(g) *Surface treatment rinse.*

SUBPART B—PSES

Pollutant or pollutant property	Maximum for any 1 day	Maximum for monthly average
	mg/off-kg (pounds per million off-pounds) of magnesium surface treated	
Chromiun	0.832	0.340
Zinc	2.76	1.16
Ammonia	252	111
Fluoride	113	49.9

(h) *Sawing or grinding spent emulsions.*

SUBPART B—PSES

Pollutant or pollutant property	Maximum for any 1 day	Maximum for monthly average
	mg/off-kg (pounds per million off-pounds) of magnesium sawed or ground	
Chromiun	0.009	0.004
Zinc	0.029	0.012
Ammonia	2.60	1.15
Fluoride	1.16	0.515

(i) *Degreasing Spent Solvents—Subpart B—PSES.* There shall be no discharge of process wastewater pollutants.

(j) *Wet air pollution control scrubber blowdown.*

SUBPART B—PSES

Pollutant or pollutant property	Maximum for any 1 day	Maximum for monthly average
	mg/off-kg (pounds per million off-pounds) of magnesium sanded and repaired or forged	
Chromium	0.273	0.112
Zinc	0.904	0.378
Ammonia	8.25	36.3
Fluoride	36.9	16.4

[50 FR 34270, Aug. 23, 1985; 51 FR 2884, Jan. 22, 1986]

§ 471.25 Pretreatment standards for new sources (PSNS).

Except as provided in 40 CFR 403.7, any new source subject to this subpart which introduces pollutants into a publicly owned treatment works must comply with 40 CFR part 403 and achieve the following pretreatment standards for new sources (PSNS). The mass of wastewater pollutants in magnesium forming process wastewater introduced into a POTW shall not exceed the following values:

(a) *Rolling spent emulsions.*

SUBPART B—PSNS

Pollutant or pollutant property	Maximum for any 1 day	Maximum for monthly average
	mg/off-kg (pounds per million off-pounds) of magnesium rolled with emulsions	
Chromium	0.028	0.011
Zinc	0.076	0.032
Ammonia	9.95	4.37
Fluoride	4.44	1.97

(b) *Forging spent lubricants—Subpart B—PSNS.* There shall be no discharge of process wastewater pollutants.

(c) *Forging contact cooling water.*

SUBPART B—PSNS

Pollutant or pollutant property	Maximum for any 1 day	Maximum for monthly average
	mg/off-kg (pounds per million off-pounds) of forged magnesium cooled with water	
Chromium	0.107	0.044
Zinc	0.295	0.122
Ammonia	38.5	17.0
Fluoride	17.2	7.63

(d) *Forging equipment cleaning wastewater.*

SUBPART B—PSNS

Pollutant or pollutant property	Maximum for any 1 day	Maximum for monthly average
	mg/off-kg (pounds per million off-pounds) of magnesium forged	
Chromium	0.002	0.0006
Zinc	0.004	0.002
Ammonia	0.532	0.234
Fluoride	0.238	0.106

(e) *Direct chill casting contact cooling water.*

SUBPART B—PSNS

Pollutant or pollutant property	Maximum for any 1 day	Maximum for monthly average
	mg/off-kg (pounds per million off-pounds) of magnesium cast with direct chill methods	
Chromium	1.46	0.593
Zinc	4.03	1.66
Ammonia	527	232
Fluoride	235	105

(f) *Surface treatment spent baths.*

SUBPART B—PSNS

Pollutant or pollutant property	Maximum for any 1 day	Maximum for monthly average
	mg/off-kg (pounds per million off-pounds) of magnesium surface treated	
Chromium	0.173	0.070
Zinc	0.476	0.196
Ammonia	62.1	27.3
Fluoride	27.8	12.3

(g) *Surface treatment rinse.*

SUBPART B—PSNS

Pollutant or pollutant property	Maximum for any 1 day	Maximum for monthly average
	mg/off-kg (pounds per million off-pounds) of magnesium surface treated	
Chromium	0.700	0.284
Zinc	1.93	0.794
Ammonia	252	111
Fluoride	113	49.9

(h) *Sawing or grinding spent emulsions.*

SUBPART B—PSNS

Pollutant or pollutant property	Maximum for any 1 day	Maximum for monthly average
	mg/off-kg (pounds per million off-pounds) of magnesium sawed or ground	
Chromium	0.007	0.003
Zinc	0.020	0.008
Ammonia	2.60	1.15
Fluoride	1.16	0.515

(i) *Degreasing spent solvents—Subpart B—PSNS.* There shall be no discharge of process wastewater pollutants.

(j) *Wet air pollution control scrubber blowdown.*

SUBPART B—PSNS

Pollutant or pollutant property	Maximum for any 1 day	Maximum for monthly average
	mg/off-kg (pounds per million off-pounds) of magnesium sanded and repaired or forged	
Chromium	0.229	0.093
Zinc	0.632	0.260
Ammonia	82.5	36.3
Fluoride	36.9	16.4

[50 FR 34270, Aug. 23, 1985; 51 FR 2884, Jan. 22, 1986]

§ 471.26 Effluent limitations representing the degree of effluent reduction attainable by the application of the best conventional pollutant control technology (BCT). [Reserved]

Subpart C—Nickel-Cobalt Forming Subcategory

§ 471.30 Applicability; description of the nickel-cobalt forming subcategory.

This subpart applies to discharges of pollutants to waters of the United States, and introductions of pollutants into publicly owned treatment works from the process operations of the nickel-cobalt forming subcategory.

§ 471.31 Effluent limitations representing the degree of effluent reduction attainable by the application of the best practicable control technology currently available (BPT).

Except as provided in 40 CFR 125.30–125.32, any existing point source subject to this subpart must achieve the following effluent limitations for the process operations representing the degree of effluent reduction attainable by the application of the best practicable control technology currently available (BPT):

(a) *Rolling spent neat oils—Subpart C—BPT.* There shall be no discharge of process wastewater pollutants.

(b) *Rolling spent emulsions.*

SUBPART C—BPT

Pollutant or pollutant property	Maximum for any 1 day	Maximum for monthly average
	mg/off-kg (pounds per million off-pounds) of nickel-cobalt rolled with emulsions	
Chromium	0.075	0.031
Nickel	0.327	0.216
Fluoride	10.1	4.49
Oil and grease	3.4	2.04
TSS	6.97	3.32
pH	(1)	(1)

[1] Within the range of 7.5 to 10.0 at all times.

(c) *Rolling contact cooling water.*

SUBPART C—BPT

Pollutant or pollutant property	Maximum for any 1 day	Maximum for monthly average
	mg/off-kg (pounds per million off-pounds) of nickel-cobalt rolled with water	
Chromium	1.66	0.679
Nickel	7.24	4.79
Fluoride	225	99.6
Oil and grease	75.4	45.3
TSS	155	73.5
pH	(1)	(1)

[1] Within the range of 7.5 to 10.0 at all times.

(d) *Tube Reducing Spent Lubricant—Subpart C—BPT.*

(1) There shall be no discharge of process wastewater pollutants except as provided under paragraph (d)(2) of this section.

(2) Process wastewater pollutants may be discharged, with no allowance for any pollutants discharged, provided the facility owner or operator demonstrates, on the basis of analytical methods set forth in or approved pursuant to 40 CFR part 136, that the concentrations of nitrosamine compounds in the wastewater discharged from the tube reducing process do not exceed 0.050 mg/l of N-nitrosodimethylamine, 0.020 mg/l of N-nitrosodiphenylamine, and 0.020 mg/l of N-nitrosodi-n-propylamine.

(3) The demonstration required under paragraph (d)(2) of this section shall be made once per month until the demonstration has been made for all three nitrosamine compounds for six consecutive months, after which time the demonstration may be made once per quarter. If a sample is found to contain any of the foregoing nitrosamine compounds at concentrations greater than those specified in paragraph (d)(2) of this section, the actions described in paragraph (d)(4) of this section shall be taken, and the demonstration required under paragraph (d)(2) of this section shall be made once per month until it has been made for all three nitrosamine compounds for six consecutive months.

(4) If sampling results show that any of the foregoing nitrosamine compounds is present in the process wastewater at concentrations greater than those specified in paragraph (d)(2) of

this section, the facility owner or operator shall ensure that, within thirty days of receiving written notification of the sampling results, there is no further discharge of tube reducing spent lubricant wastewater until the owner or operator:

(i) Performs a subsequent analysis which demonstrates that the concentrations of the foregoing nitrosamine compounds do not exceed the levels specified in paragraph (d)(2) of this section; or

(ii) Substitutes a new tube reducing lubricant and thereafter complies with the requirements of paragraph (d)(3) of this section; or

(iii) Determines the source of the pollutant whose concentration exceeded the level specified in paragraph (d)(2) of this section and demonstrates to the satisfaction of the NPDES issuing authority that such source has been eliminated.

(5) The concentration limits specified in paragraph (d)(2) of this section apply at the point of discharge from the tube reducing process. However, sampling after the tube reducing wastewater has been commingled with other wastewaters is permitted if:

(i) Any dilution caused by the other wastewaters is taken into account in determining the appropriate (i.e., lower) allowable discharge concentration; and

(ii) An analytical method of sufficient sensitivity is used to measure the levels of each of the foregoing nitrosamine compounds in the wastewaters being sampled.

(e) *Drawing spent neat oils—Subpart C—BPT.* There shall be no discharge of process wastewater pollutants

(f) *Drawing spent emulsions.*

SUBPART C—BPT

Pollutant or pollutant property	Maximum for any 1 day	Maximum for monthly average
	mg/off-kg (pounds per million off-pounds) of nickel-cobalt drawn with emulsions	
Chromium	0.042	0.017
Nickel	0.183	0.121
Fluoride	5.68	2.52
Oil and grease	1.91	1.15
TSS	3.91	1.86
pH	(1)	(1)

[1] Within the range of 7.5 to 10.0 at all times.

(g) *Extrusion spent lubricants—Subpart C—BPT.* There shall be no discharge of process wastewater pollutants.

(h) *Extrusion press or solution heat treatment contact cooling water.*

SUBPART C—BPT

Pollutant or pollutant property	Maximum for any 1 day	Maximum for monthly average
	mg/off-kg (pounds per million off-pounds) of nickel-cobalt heat treated	
Chromium	0.037	0.015
Nickel	0.160	0.106
Fluoride	4.95	2.20
Oil and grease	1.67	0.999
TSS	3.41	1.63
pH	(1)	(1)

[1] Within the range of 7.5 to 10.0 at all times.

(i) *Extrusion press hydraulic fluid leakage.*

SUBPART C—BPT

Pollutant or pollutant property	Maximum for any 1 day	Maximum for monthly average
	mg/off-kg (pounds per million off-pounds) of nickel-cobalt extruded	
Chromium	0.102	0.042
Nickel	0.446	0.295
Fluoride	13.8	6.13
Oil and grease	4.64	2.79
TSS	9.51	4.53
pH	(1)	(1)

[1] Within the range of 7.5 to 10.0 at all times.

(j) *Forging equipment cleaning wastewater.*

SUBPART C—BPT

Pollutant or pollutant property	Maximum for any 1 day	Maximum for monthly average
	mg/off-kg (pounds per million off-pounds) of nickel-cobalt forged	
Chromium	0.018	0.007
Nickel	0.077	0.051
Fluoride	2.38	1.06
Oil and grease	0.800	0.480
TSS	1.640	0.780
pH	(1)	(1)

[1] Within the range of 7.5 to 10.0 at all times.

(k) *Forging contact cooling water.*

SUBPART C—BPT

Pollutant or pollutant property	Maximum for any 1 day	Maximum for monthly average
	mg/off-kg (pounds per million off-pounds) of forged nickel-cobalt cooled with water	
Chromium	0.209	0.086
Nickel	0.910	0.602
Flouride	28.2	12.5
Oil and grease	9.48	5.69
TSS	19.5	9.25
pH	(1)	(1)

1 Within the range of 7.5 to 10.0 at all times.

(l) *Forging press hydraulic fluid leakage.*

SUBPART C—BPT

Pollutant or pollutant property	Maximum for any 1 day	Maximum for monthly average
	mg/off-kg (pounds per million off-pounds) of nickel-cobalt forged	
Chromium	0.083	0.034
Nickel	0.359	0.238
Fluoride	11.2	4.94
Oil and grease	3.74	2.25
TSS	7.67	3.65
pH	(1)	(1)

1 Within the range of 7.5 to 10.0 at all times.

(m) *Forging spent lubricants—Subpart C—BPT.* There shall be no discharge of process wastewater pollutants.

(n) *Stationary casting contact cooling water.*

SUBPART C—BPT

Pollutant or pollutant property	Maximum for any 1 day	Maximum for monthly average
	mg/off-kg (pounds per million off-pounds) of nickel-cobalt cast with stationary casting methods	
Chromium	5.33	2.18
Nickel	23.3	15.4
Fluoride	720	320
Oil and grease	242	145
TSS	496	236
pH	(1)	(1)

1 Within the range of 7.5 to 10.0 at all times.

(o) *Vacuum melting steam condensate—Subpart C—BPT.* There shall be no allowance for the discharge of process wastewater pollutants.

(p) *Metal powder production atomization wastewater.*

SUBPART C—BPT

Pollutant or pollutant property	Maximum for any 1 day	Maximum for monthly average
	mg/off-kg (pounds per million off-pounds) of nickel-cobalt metal powder atomized	
Chromium	1.16	0.472
Nickel	5.03	3.33
Fluoride	156	69.2
Oil and grease	52.4	31.5
TSS	108	51.1
pH	(1)	(1)

1 Within the range of 7.5 to 10.0 at all times.

(q) *Annealing and solution heat treatment contact cooling water—Subpart C—BPT.* There shall be no allowance for the discharge of process wastewater pollutants.

(r) *Wet air pollution control scrubber blowdown.*

SUBPART C—BPT

Pollutant or pollutant property	Maximum for any 1 day	Maximum for monthly average
	mg/off-kg (pounds per million off-pounds) of nickel-cobalt formed	
Chromium	0.357	0.146
Nickel	1.56	1.03
Fluoride	48.2	21.4
Oil and grease	16.2	9.72
TSS	33.2	15.8
pH	(1)	(1)

1 Within the range of 7.5 to 10.0 at all times.

(s) *Surface treatment spent baths.*

SUBPART C—BPT

Pollutant or pollutant property	Maximum for any 1 day	Maximum for monthly average
	mg/off-kg (pounds per million off-pounds) of nickel-cobalt surface treated	
Chromium	0.412	0.169
Nickel	1.80	1.19
Fluoride	55.7	24.7
Oil and grease	18.7	11.2
TSS	38.4	18.3
pH	(1)	(1)

1 Within the range of 7.5 to 10.0 at all times.

(t) *Surface treatment rinse.*

SUBPART C—BPT

Pollutant or pollutant property	Maximum for any 1 day	Maximum for monthly average
	mg/off-kg (pounds per million off-pounds) of nickel-cobalt surface treated	
Chromium	10.4	4.25
Nickel	45.3	30.0
Fluoride	1410	623
Oil and grease	472	283
TSS	968	460
pH	(1)	(1)

1 Within the range of 7.5 to 10.0 at all times.

(u) *Alkaline cleaning spent baths.*

SUBPART C—BPT

Pollutant or pollutant property	Maximum for any 1 day	Maximum for monthly average
	mg/off-kg (pounds per million off-pounds) of nickel-cobalt alkaline cleaned	
Chromium	0.015	1.52
Nickel	16.2	10.7
Fluoride	502	223
Oil and grease	169	101
TSS	346	165
pH	(1)	(1)

1 Within the range of 7.5 to 10.0 at all times.

(v) *Alkaline cleaning rinse.*

SUBPART C—BPT

Pollutant or pollutant property	Maximum for any 1 day	Maximum for monthly average
	mg/off-kg (pounds per million off-pounds) of nickel-cobalt alkaline cleaned	
Chromium	1.03	0.420
Nickel	4.48	2.96
Fluoride	139	61.5
Oil and grease	46.6	28.0
TSS	95.6	45.5
pH	(1)	(1)

1 Within the range of 7.5 to 10.0 at all times.

(w) *Molten salt rinse.*

SUBPART C—BPT

Pollutant or pollutant property	Maximum for any 1 day	Maximum for monthly average
	mg/off-kg (pounds per million off-pounds) of nickel-cobalt treated with molten salt	
Chromium	3.72	1.52
Nickel	16.2	10.7
Fluoride	502	223
Oil and grease	169	101
TSS	346	165
pH	(1)	(1)

1 Within the range of 7.5 to 10.0 at all times.

(x) *Ammonia rinse.*

SUBPART C—BPT

Pollutant or pollutant property	Maximum for any 1 day	Maximum for monthly average
	mg/off-kg (pounds per million off-pounds) of nickel-cobalt treated with ammonia solution	
Chromium	0.007	0.003
Nickel	0.029	0.019
Fluoride	0.881	0.391
Oil and grease	0.296	0.178
TSS	0.607	0.289
pH	.....	(1)

1 Within the range of 7.5 to 10.0 at all times.

(y) *Sawing or grinding spent emulsions.*

SUBPART C—BPT

Pollutant or pollutant property	Maximum for any 1 day	Maximum for monthly average
	mg/off-kg (pounds per million off-pounds) of nickel-cobalt sawed or ground with emulsions	
Chromium	0.018	0.007
Nickel	0.076	0.050
Fluoride	2.35	1.04
Oil and grease	0.788	0.473
TSS	1.62	0.769
pH	.....	(1)

1 Within the range of 7.5 to 10.0 at all times.

(z) *Sawing or grinding rinse.*

SUBPART C—BPT

Pollutant or pollutant property	Maximum for any 1 day	Maximum for monthly average
	mg/off-kg (pounds per million off-pounds) of sawed or ground nickel-cobalt rinsed	
Chromium	0.797	0.326
Nickel	3.48	2.30
Fluoride	108	47.8
Oil and grease	36.2	21.7
TSS	74.2	35.3
pH		(1)

[1] Within the range of 7.5 to 10.0 at all times.

(aa) *Steam Cleaning Condensate.*

SUBPART C—BPT

Pollutant or pollutant property	Maximum for any 1 day	Maximum for monthly average
	mg/off-kg (pounds per million off-pounds) of nickel-cobalt steam cleaned	
Chromium	0.013	0.006
Nickel	0.058	0.039
Fluoride	1.79	0.795
Oil and grease	0.602	0.361
TSS	1.24	0.587
pH		(1)

[1] Within the range of 7.5 to 10.0 at all times.

(bb) *Hydrostatic tube testing and ultrasonic testing wastewater—Subpart C—BPT.* There shall be no allowance for the discharge of process wastewater pollutants.

(cc) *Degreasing spent solvents—Subpart C—BPT.* There shall be no discharge of process wastewater pollutants.

(dd) *Dye penetrant testing wastewater.*

SUBPART C—BPT

Pollutant or pollutant property	Maximum for any 1 day	Maximum for monthly average
	mg/off-kg (pounds per million off-pounds) of nickel-cobalt tested with dye penetrant method	
Chromium	0.094	0.039
Nickel	0.409	0.271
Fluoride	12.7	5.63
Oil and grease	4.26	2.56
TSS	8.74	4.16
pH	(1)	(1)

[1] Within the range of 7.5 to 10.0 at all times.

(ee) *Electrocoating rinse.*

SUBPART C—BPT

Pollutant or pollutant property	Maximum for any 1 day	Maximum for monthly average
	mg/off-kg (pounds per million off-pounds) of nickel-cobalt electrocoated	
Chromium	1.48	0.607
Nickel	6.47	4.28
Fluoride	201	89.0
Oil and grease	67.4	40.5
TSS	138	65.7
pH	(1)	(1)

[1] Within the range of 7.5 to 10.0 at all times.

(ff) *Miscellaneous wastewater sources.*

SUBPART C—BPT

Pollutant or pollutant property	Maximum for any 1 day	Maximum for monthly average
	mg/off-kg (pounds per million off-pounds) of nickel-cobalt formed	
Chromium	0.108	0.044
Nickel	0.473	0.313
Fluoride	14.7	6.50
Oil and grease	4.92	2.95
TSS	10.1	4.80
pH	(1)	(1)

[1] Within the range of 7.5 to 10.0 at all times.

[50 FR 34270, Aug. 23, 1985; 51 FR 2884, Jan. 22, 1986, as amended at 54 FR 11348, Mar. 17, 1989]

§ 471.32 Effluent limitations representing the degree of effluent reduction attainable by the application of the best available technology economically achievable (BAT).

Except as provided in 40 CFR 125.30 through 125.32, any existing point source subject to this subpart must achieve the following effluent limitations representing the degree of effluent reduction attainable by the application of the best available technology economically achievable (BAT):

(a) *Rolling spent neat oils—Subpart C—BAT.* There shall be no discharge of process wastewater pollutants.

(b) *Rolling spent emulsions.*

SUBPART C—BAT

Pollutant or pollutant property	Maximum for any 1 day	Maximum for monthly average
	mg/off-kg (pounds per million off-pounds) of nickel-cobalt rolled with emulsions	
Chromium	0.063	0.026
Nickel	0.094	0.063
Fluoride	10.1	4.49

(c) *Rolling contact cooling water.*

SUBPART C—BAT

Pollutant or pollutant property	Maximum for any 1 day	Maximum for monthly average
	mg/off-kg (pounds per million off-pounds) of nickel-cobalt rolled with water	
Chromium	0.028	0.011
Nickel	0.042	0.028
Fluoride	4.49	1.99

(d) *Tube Reducing Spent Lubricant—Subpart C—BAT.*

(1) There shall be no discharge of process wastewater pollutants except as provided under paragraph (d)(2) of this section.

(2) Process wastewater pollutants may be discharged, with no allowance for any pollutants discharged, provided the facility owner or operator demonstrates, on the basis of analytical methods set forth in or approved pursuant to 40 CFR part 136, that the concentrations of nitrosamine compounds in the wastewater discharged from the tube reducing process do not exceed 0.050 mg/l of N-nitrosodimethylamine, 0.020 mg/l of N-nitrosodiphenylamine, and 0.020 mg/l of N-nitrosodi-n-propylamine.

(3) The demonstration required under paragraph (d)(2) of this section shall be made once per month until the demonstration has been made for all three nitrosamine compounds for six consecutive months, after which time the demonstration may be made once per quarter. If a sample is found to contain any of the foregoing nitrosamine compounds at concentrations greater than those specified in subparagraph (d)(2) of this section, the actions described in paragraph (d)(4) of this section shall be taken, and the demonstration required under subparagraph (d)(2) of this section shall be made once per month until it has been made for all three nitrosamine compounds for six consecutive months.

(4) If sampling results show that any of the foregoing nitrosamine compounds is present in the process wastewater at concentrations greater than those specified in subparagraph (d)(2) of this section, the facility owner or operator shall ensure that, within thirty days of receiving written notification of the sampling results, there is no further discharge of tube reducing spent lubricant wastewater until the owner or operator:

(i) Performs a subsequent analysis which demonstrates that the concentrations of the foregoing nitrosamine compounds do not exceed the levels specified in paragraph (d)(2) of this section; or

(ii) Substitutes a new tube reducing lubricant and thereafter complies with the requirements of paragraph (d)(3) of this section; or

(iii) Determines the source of the pollutant whose concentration exceeded the level specified in paragraph (d)(2) of this section and demonstrates to the satisfaction of the NPDES issuing authority that such source has been eliminated.

(5) The concentration limits specified in paragraph (d)(2) of this section apply at the point of discharge from the tube reducing process. However, sampling after the tube reducing wastewater has been commingled with other wastewaters is permitted if:

(i) Any dilution caused by the other wastewaters is taken into account in determining the appropriate (i.e., lower) allowable discharge concentration; and

(ii) An analytical method of sufficient sensitivity is used to measure the levels of each of the foregoing nitrosamine compounds in the wastewaters being sampled.

(e) *Drawing spent neat oils—Subpart C—BAT.* There shall be no discharge of process wastewater pollutants.

(f) *Drawing spent emulsions.*

SUBPART C—BAT

Pollutant or pollutant property	Maximum for any 1 day	Maximum for monthly average
	mg/off-kg (pounds per million off-pounds) of nickel-cobalt drawn with emulsions	
Chromium	0.036	0.015
Nickel	0.053	0.036
Fluoride	5.68	2.52

(g) *Extrusion spent lubricants—Subpart C—BAT*. There shall be no discharge of process wastewater pollutants.

(h) *Extrusion press or solution heat treatment contact cooling water*.

SUBPART C—BAT

Pollutant or pollutant property	Maximum for any 1 day	Maximum for monthly average
	mg/off-kg (pounds per million off-pounds) of extruded nickel-cobalt heat treated	
Chromium	0.031	0.013
Nickel	0.046	0.031
Fluoride	4.95	2.20

(i) *Extrusion press hydraulic fluid leakage*.

SUBPART C—BAT

Pollutant or pollutant property	Maximum for any 1 day	Maximum for monthly average
	mg/off-kg (pounds per million off-pounds) of nickel-cobalt extruded	
Chromium	0.086	0.034
Nickel	0.128	0.086
Fluoride	13.8	6.13

(j) *Forging equipment cleaning wastewater*.

SUBPART C—BAT

Pollutant or pollutant property	Maximum for any 1 day	Maximum for monthly average
	mg/off-kg (pounds per million off-pounds) of nickel-cobalt forged	
Chromium	0.002	0.0006
Nickel	0.002	0.002
Fluoride	0.238	0.106

(k) *Forging contact cooling water*.

SUBPART C—BAT

Pollutant or pollutant property	Maximum for any 1 day	Maximum for monthly average
	mg/off-kg (pounds per million off-pounds) of forged nickel-cobalt cooled with water	
Chromium	0.018	0.007
Nickel	0.026	0.018
Fluoride	2.82	1.25

(l) *Forging press hydraulic fluid leakage*.

SUBPART C—BAT

Pollutant or pollutant property	Maximum for any 1 day	Maximum for monthly average
	mg/off-kg (pounds per million off-pounds) of nickel-cobalt forged	
Chromium	0.069	0.028
Nickel	.103	0.069
Fluoride	11.2	4.94

(m) *Forging spent lubricants—Subpart C—BAT*. There shall be no discharge of process wastewater pollutants.

(n) *Stationary casting contact cooling water*.

SUBPART C—BAT

Pollutant or pollutant property	Maximum for any 1 day	Maximum for monthly average
	mg/off-kg (pounds per million off-pounds) of nickel-cobalt cast with stationary casting methods	
Chromium	0.448	0.182
Nickel	.666	.448
Fluoride	72.0	32.0

(o) *Vacuum melting steam condensate—Subpart C—BAT*. There shall be no allowance for the discharge of wastewater pollutants.

(p) *Metal powder production atomization wastewater*.

SUBPART C—BAT

Pollutant or pollutant property	Maximum for any 1 day	Maximum for monthly average
	mg/off-kg (pounds per million off-pounds) of nickel-cobalt metal powder atomized	
Chromium	0.970	0.393
Nickel	1.44	.970
Fluoride	156	69.2

(q) *Annealing and solution heat treatment contact cooling water—Subpart C—BAT.* There shall be no allowance for the discharge of wastewater pollutants.

(r) *Wet air pollution control scrubber blowdown.*

SUBPART C—BAT

Pollutant or pollutant property	Maximum for any 1 day	Maximum for monthly average
	mg/off-kg (pounds per million off-pounds) of nickel-cobalt formed	
Chromium	0.300	0.122
Nickel	.446	.300
Fluoride	48.2	21.4

(s) *Surface treatment spent baths.*

SUBPART C—BAT

Pollutant or pollutant property	Maximum for any 1 day	Maximum for monthly average
	mg/off-kg (pounds per million off-pounds) of nickel-cobalt surface treated	
Chromium	0.346	0.141
Nickel	.514	.346
Fluoride	55.7	24.7

(t) *Surface treatment rinse.*

SUBPART C—BAT

Pollutant or pollutant property	Maximum for any 1 day	Maximum for monthly average
	mg/off-kg (pounds per million off-pounds) of nickel-cobalt surface treated	
Chromium	0.873	0.354
Nickel	1.30	.873
Fluoride	141	62.3

(u) *Alkaline cleaning spent baths.*

SUBPART C—BAT

Pollutant or pollutant property	Maximum for any 1 day	Maximum for monthly average
	mg/off-kg (pounds per million off-pounds) of nickel-cobalt alkaline cleaned	
Chromium	0.013	0.005
Nickel	0.019	0.013
Fluoride	2.02	0.895

(v) *Alkaline cleaning rinse.*

SUBPART C—BAT

Pollutant or pollutant property	Maximum for any 1 day	Maximum for monthly average
	mg/off-kg (pounds per million off-pounds) of nickel-cobalt alkaline cleaned	
Chromium	0.086	0.035
Nickel	0.128	0.086
Fluoride	13.9	6.15

(w) *Molten salt rinse.*

SUBPART C—BAT

Pollutant or pollutant property	Maximum for any 1 day	Maximum for monthly averge
	mg/off-kg (pounds per million off-pounds) of nickel-cobalt treated with molten salt	
Chromium	0.312	0.127
Nickel	0.464	0.312
Fluoride	50.2	22.3

(x) *Ammonia rinse.*

SUBPART C—BAT

Pollutant or pollutant property	Maximum for any 1 day	Maximum for monthly average
	mg/off-kg (pounds per million off-pounds) of nickel-cobalt treated with ammonia solution	
Chromium	0.006	0.002
Nickel	0.008	0.006
Fluoride	0.881	0.391

(y) *Sawing or grinding spent emulsions.*

SUBPART C—BAT

Pollutant or pollutant property	Maximum for any 1 day	Maximum for monthly average
	mg/off-kg (pounds per million off-pounds) of nickel-cobalt sawed or ground with emulsions	
Chromium	0.015	0.006
Nickel	0.022	0.015
Fluoride	2.35	1.04

(z) *Sawing or grinding rinse.*

SUBPART C—BAT

Pollutant or pollutant property	Maximum for any 1 day	Maximum for monthly average
	mg/off-kg (pounds per million off-pounds) of sawed or ground nickel-cobalt rinsed	
Chromium	0.067	0.027
Nickel	0.100	0.067
Fluoride	10.8	4.78

(aa) *Steam cleaning condensate.*

SUBPART C—BAT

Pollutant or pollutant property	Maximum for any 1 day	Maximum for monthly average
	mg/off-kg (pounds per million off-pounds) of nickel-cobalt steam cleaned	
Chromium	0.011	0.005
Nickel	0.017	0.011
Fluoride	1.79	0.795

(bb) *Hydrostatic tube testing and ultrasonic testing wastewater—Subpart C—BAT.* There shall be no allowance for the discharge of process wastewater pollutants.

(cc) *Degreasing spent solvents—Subpart C—BAT.* There shall be no discharge of process wastewater pollutants.

(dd) *Dye penetrant testing wastewater.*

SUBPART C—BAT

Pollutant or pollutant property	Maximum for any 1 day	Maximum for monthly average
	mg/off-kg (pounds per million off-pounds) of nickel-cobalt tested with dye penetrant method	
Chromium	0.079	0.032
Nickel	0.117	0.079
Fluoride	12.7	5.63

(ee) *Electrocoating rinse.*

SUBPART C—BAT

Pollutant or pollutant property	Maximum for any 1 day	Maximum for monthly average
	mg/off-kg (pounds per million off-pounds) of nickel-cobalt electrocoated	
Chromium	1.25	0.506
Nickel	1.86	1.25
Fluoride	201	89.0

(ff) *Miscellaneous wastewater sources.*

SUBPART C—BAT

Pollutant or pollutant property	Maximum for any 1 day	Maximum for monthly average
	mg/off-kg (pounds per million off-pounds) of nickel-cobalt formed	
Chromium	0.091	0.037
Nickel	0.136	0.091
Fluoride	14.7	6.50

[50 FR 34270, Aug. 23, 1985; 51 FR 2885, Jan. 22, 1986, as amended at 54 FR 11348, Mar. 17, 1989; 54 FR 13606, Apr. 4, 1989]

§ 471.33 New source performance standards (NSPS).

Any new source subject to this subpart must achieve the following new source performance standards (NSPS). The mass of pollutants in the nickel-cobalt forming process wastewater shall not exceed the following values:

(a) *Rolling spent neat oils—Subpart C—NSPS.* There shall be no discharge of process wastewater pollutants.

(b) *Rolling spent emulsions.*

SUBPART C—NSPS

Pollutant or pollutant property	Maximum for any 1 day	Maximum for monthly average
	mg/off-kg (pounds per million off-pounds) of nickel-cobalt rolled with emulsions	
Chromium	0.063	0.026
Nickel	0.094	0.063
Fluoride	10.1	4.49
Oil and grease	1.70	1.70
TSS	2.55	2.04
pH	([1])	([1])

[1] Within the range of 7.5 to 10.0 at all times.

(c) *Rolling contact cooling water.*

SUBPART C—NSPS

Pollutant or pollutant property	Maximum for any 1 day	Maximum for monthly average
	mg/off-kg (pounds per million off-pounds) of nickel-cobalt rolled with water	
Chromium	0.028	0.012
Nickel	0.042	0.028
Fluoride	4.49	1.99
Oil and grease	0.754	0.754
TSS	1.13	0.905
pH	(1)	(1)

[1] Within the range of 7.5 to 10.0 at all times.

(d) *Tube Reducing Spent Lubricant—Subpart C—NSPS.*

(1) There shall be no discharge of process wastewater pollutants except as provided under paragraph (d)(2) of this section.

(2) Process wastewater pollutants may be discharged, with no allowance for any pollutants discharged, provided the facility owner or operator demonstrates, on the basis of analytical methods set forth in or approved pursuant to 40 CFR part 136, that the concentrations of nitrosamine compounds in the wastewater discharged from the tube reducing process do not exceed 0.050 mg/l of N-nitrosodimethylamine, 0.020 mg/l of N-nitrosodiphenylamine, and 0.020 mg/l of N-nitrosodi-n-propylamine.

(3) The demonstration required under paragraph (d)(2) of this section shall be made once per month until the demonstration has been made for all three nitrosamine compounds for six consecutive months, after which time the demonstration may be made once per quarter. If a sample is found to contain any of the foregoing nitrosamine compounds at concentrations greater than those specified in paragraph (d)(2) of this section, the actions described in paragraph (d)(4) of this section shall be taken, and the demonstration required under paragraph (d)(2) of this section shall be made once per month until it has been made for all three nitrosamine compounds for six consecutive months.

(4) If sampling results show that any of the foregoing nitrosamine compounds is present in the process wastewater at concentrations greater than those specified in paragraph (d)(2) of this section, the facility owner or operator shall ensure that, within thirty days of receiving written notification of the sampling results, there is no further discharge of tube reducing spent lubricant wastewater until the owner or operator:

(i) Performs a subsequent analysis which demonstrates that the concentrations of the foregoing nitrosamine compounds do not exceed the levels specified in paragraph (d)(2) of this section; or

(ii) Substitutes a new tube reducing lubricant and thereafter complies with the requirements of paragraph (d)(3) of this section; or

(iii) Determines the source of the pollutant whose concentration exceeded the level specified in paragraph (d)(2) of this section and demonstrates to the satisfaction of the NPDES issuing authority that such source has been eliminated.

(5) The concentration limits specified in paragraph (d)(2) of this section apply at the point of discharge from the tube reducing process. However, sampling after the tube reducing wastewater has been commingled with other wastewaters is permitted if:

(i) Any dilution caused by the other wastewaters is taken into account in determining the appropriate (i.e., lower) allowable discharge concentration; and

(ii) An analytical method of sufficient sensitivity is used to measure the levels of each of the foregoing nitrosamine compounds in the wastewaters being sampled.

(e) *Drawing spent neat oils—Subpart C—NSPS.* There shall be no discharge of process wastewater pollutants.

(f) *Drawing spent emulsions.*

SUBPART C—NSPS

Pollutant or pollutant property	Maximum for any 1 day	Maximum for monthly average
	mg/off-kg (pounds per million off-pounds) of nickel-cobalt drawn with emulsions	
Chromium	0.036	0.015
Nickel	0.053	0.036
Fluoride	5.68	2.52
Oil and grease	0.954	0.954
TSS	1.43	1.15
pH	(1)	(1)

[1] Within the range of 7.5 to 10.0 at all times.

(g) *Extrusion spent lubricants—Subpart C—NSPS.* There shall be no discharge of process wastewater pollutants.

(h) *Extrusion press or solution heat treatment contact cooling water.*

SUBPART C—NSPS

Pollutant or pollutant property	Maximum for any 1 day	Maximum for monthly average
	mg/off-kg (pounds per million off-pounds) of extruded nickel-cobalt heat treated	
Chromium	0.031	0.013
Nickel	0.046	0.031
Fluoride	4.95	2.20
Oil and grease	0.832	0.832
TSS	1.25	0.999
pH	(1)	(1)

[1] Within the range of 7.5 to 10.0 at all times.

(i) *Extrusion press hydraulic fluid leakage.*

SUBPART C—NSPS

Pollutant or pollutant property	Maximum for any 1 day	Maximum for monthly average
	mg/off-kg (pounds per million off-pounds) of nickel-cobalt extruded	
Chromium	0.086	0.035
Nickel	0.128	0.086
Fluoride	13.8	6.13
Oil and grease	2.32	2.32
TSS	3.48	2.79
pH	(1)	(1)

[1] Within the range of 7.5 to 10.0 at all times.

(j) *Forging equipment cleaning wastewater.*

SUBPART C—NSPS

Pollutant or pollutant property	Maximum for any 1 day	Maximum for monthly average
	mg/off-kg (pounds per million off-pounds) of nickel-cobalt forged	
Chromium	0.002	0.00006
Nickel	0.002	0.002
Fluoride	0.238	0.106
Oil and grease	0.040	0.040
TSS	0.060	0.048
pH	(1)	(1)

[1] Within the range of 7.5 to 10.0 at all times.

(k) *Forging contact cooling water.*

SUBPART C—NSPS

Pollutant or pollutant property	Maximum for any 1 day	Maximum for monthly average
	mg/off-kg (pounds per million off-pounds) of forged nickel-cobalt cooled with water	
Chromium	0.018	0.007
Nickel	0.026	0.018
Fluoride	2.82	1.25
Oil and grease	0.474	0.474
TSS	0.711	0.569
pH	(1)	(1)

[1] Within the range of 7.5 to 10.0 at all times.

(l) *Forging press hydraulic fluid leakage.*

SUBPART C—NSPS

Pollutant or pollutant property	Maximum for any 1 day	Maximum for monthly average
	mg/off-kg (pounds per million off-pounds) of nickel-cobalt forged	
Chromium	0.069	0.028
Nickel	0.103	0.069
Fluoride	11.2	4.94
Oil and grease	1.87	1.87
TSS	2.81	2.25
pH	(1)	(1)

[1] Within the range of 7.5 to 10.0 at all times.

(m) *Forging spent lubricants—Subpart C—NSPS.* There shall be no discharge of process wastewater pollutants.

(n) *Stationary casting contact cooling water.*

SUBPART C—NSPS

Pollutant or pollutant property	Maximum for any 1 day	Maximum for monthly average
	mg/off-kg (pounds per million off-pounds) of nickel-cobalt cast with stationary casting methods	
Chromium	0.448	0.182
Nickel	0.666	0.448
Fluoride	72.0	32.0
Oil and grease	12.1	12.1
TSS	18.2	14.5
pH	(1)	(1)

[1] Within the range of 7.5 to 10.0 at all times.

(o) *Vacuum melting steam condensate—Subpart C—NSPS.* There shall be no allowance for the discharge of process wastewater pollutants.

(p) *Metal powder production atomization wastewater.*

SUBPART C—NSPS

Pollutant or pollutant property	Maximum for any 1 day	Maximum for monthly average
	mg/off-kg (pounds per million off-pounds) of nickel-cobalt metal powder atomized	
Chromium	0.970	0.393
Nickel	1.44	0.970
Fluoride	156	69.2
Oil and grease	26.2	26.2
TSS	39.3	31.5
pH	(1)	(1)

1 Within the range of 7.5 to 10.0 at all times.

(q) *Annealing and solution heat treatment contact cooling water—Subpart C—NSPS.* There shall be no allowance for the discharge of process wastewater pollutants.

(r) *Wet air pollution control scrubber blowdown.*

SUBPART C—NSPS

Pollutant or pollutant property	Maximum for any 1 day	Maximum for monthly average
	mg/off-kg (pounds per million off-pounds) of nickel-cobalt formed	
Chromium	0.300	0.122
Nickel	0.450	0.300
Fluoride	48.2	21.4
Oil and grease	8.1	8.1
TSS	12.2	9.72
pH	(1)	(1)

1 Within the range of 7.5 to 10.0 at all times.

(s) *Surface treatment spent baths.*

SUBPART C—NSPS

Pollutant or pollutant property	Maximum for any 1 day	Maximum for monthly average
	mg/off-kg (pounds per million off-pounds) of nickel-cobalt surface treated	
Chromium	0.346	0.141
Nickel	0.515	0.346
Fluoride	55.7	24.7
Oil and grease	9.35	9.35
TSS	14.1	11.2
pH	(1)	(1)

1 Within the range of 7.5 to 10.0 at all times.

(t) *Surface treatment rinse.*

SUBPART C—NSPS

Pollutant or pollutant property	Maximum for any 1 day	Maximum for monthly average
	mg/off-kg (pounds per million off-pounds) of nickel-cobalt surface treated	
Chromium	0.874	0.354
Nickel	1.30	0.873
Fluoride	141	62.3
Oil and grease	23.6	23.6
TSS	35.4	28.3
pH	(1)	(1)

1 Within the range of 7.5 to 10.0 at all times.

(u) *Alkaline cleaning spent baths.*

SUBPART C—NSPS

Pollutant or pollutant property	Maximum for any 1 day	Maximum for monthly average
	mg/off-kg (pounds per million off-pounds) of nickel-cobalt alkaline cleaned	
Chromium	0.013	0.005
Nickel	0.019	0.013
Fluoride	2.02	0.895
Oil and grease	0.339	0.339
TSS	0.509	0.407
pH	(1)	(1)

1 Within the range of 7.5 to 10.0 at all times.

(v) *Alkaline cleaning rinse.*

SUBPART C—NSPS

Pollutant or pollutant property	Maximum for any 1 day	Maximum for monthly average
	mg/off-kg (pounds per million off-pounds) of nickel-cobalt alkaline cleaned	
Chromium	0.086	0.035
Nickel	.128	.086
Fluoride	13.9	6.15
Oil and grease	2.33	2.33
TSS	3.50	2.80
pH	(1)	(1)

1 Within the range of 7.5 to 10.0 at all times.

(w) *Molten salt rinse.*

SUBPART C—NSPS

Pollutant or pollutant property	Maximum for any 1 day	Maximum for monthly average
	mg/off-kg (pounds per million off-pounds) of nickel-cobalt treated with molten salt	
Chromium	0.312	0.127
Nickel	0.464	0.312
Fluoride	50.2	22.3
Oil and grease	8.44	8.44
TSS	12.7	10.1
pH	(1)	(1)

1 Within the range of 7.5 to 10.0 at all times.

(x) *Ammonia rinse.*

SUBPART C—NSPS

Pollutant or pollutant property	Maximum for any 1 day	Maximum for monthly average
	mg/off-kg (pounds per million off-pounds) of nickel-cobalt treated with ammonia solution	
Chromium	0.006	0.002
Nickel	.008	.006
Fluoride	.881	.391
Oil and grease	.148	.148
TSS	222	178
pH	(1)	(1)

1 Within the range of 7.5 to 10.0 at all times.

(y) *Sawing or grinding spent emulsions.*

SUBPART C—NSPS

Pollutant or pollutant property	Maximum for any 1 day	Maximum for monthly average
	mg/off-kg (pounds per million off-pounds) of nickel-cobalt sawed or ground	
Chromium	0.015	0.006
Nickel	.002	.015
Fluoride	2.35	1.04
Oil and grease	.394	.394
TSS	591	473
pH	(1)	(1)

1 Within the range of 7.5 to 10.0 at all times.

(z) *Sawing or grinding rinse.*

SUBPART C—NSPS

Pollutant or pollutant property	Maximum for any 1 day	Maximum for monthly average
	mg/off-kg (pounds per million off-pounds) of sawed or ground nickel-cobalt rinsed	
Chromium	0.067	0.027
Nickel	0.100	0.067
Fluoride	10.8	4.78
Oil and grease	1.81	1.81
TSS	2.72	217
pH	(1)	(1)

1 Within the range of 7.5 to 10.0 at all times.

(aa) *Steam cleaning condensate.*

SUBPART C—NSPS

Pollutant or pollutant property	Maximum for any 1 day	Maximum for monthly average
	mg/off-kg (pounds per million off-pounds) of nickel-cobalt steam cleaned	
Chromium	0.011	0.005
Nickel	0.017	0.011
Fluoride	1.79	0.795
Oil and grease	0.301	0.301
TSS	0.452	0.361
pH	(1)	(1)

1 Within the range of 7.5 to 10.0 at all times.

(bb) *Hydrostatic tube testing and ultrasonic testing wastewater—Subpart C—NSPS.* There shall be no discharge of process wastewater pollutants.

(cc) *Degreasing spent solvents.—Subpart C—NSPS.* There shall be no discharge of process wastewater pollutants.

(dd) *Dye penetrant testing wastewater.*

SUBPART C—NSPS

Pollutant or pollutant property	Maximum for any 1 day	Maximum for monthly average
	mg/off-kg (pounds per million off-pounds) of nickel-cobalt tested with dye penetrant method	
Chromium	0.079	0.032
Nickel	0.117	0.079
Fluoride	12.7	5.63
Oil and grease	2.13	2.13
TSS	3.20	2.56
pH	(1)	(1)

1 Within the range of 7.5 to 10.0 at all times.

(ee) *Electrocoating rinse.*

SUBPART C—NSPS

Pollutant or pollutant property	Maximum for any 1 day	Maximum for monthly average
	mg/off-kg (pounds per million off-pounds) of nickel-cobalt electrocoated	
Chromium	1.25	0.506
Nickel	1.86	1.25
Fluoride	201	89.0
Oil and grease	33.7	33.7
TSS	50.6	40.5
pH	(1)	(1)

[1] Within the range of 7.5 to 10.0 at all times.

(ff) *Miscellaneous wastewater sources.*

SUBPART C—NSPS

Pollutant or pollutant property	Maximum for any 1 day	Maximum for monthly average
	mg/off-kg (pounds per million off-pounds) of nickel-cobalt formed	
Chromium	0.091	0.037
Nickel	0.136	0.091
Fluoride	14.7	6.50
Oil and grease	2.46	2.46
TSS	3.69	2.95
pH	(1)	(1)

[1] Within the range of 7.5 to 10.0 at all times.

[50 FR 34270, Aug. 23, 1985; 51 FR 2885, Jan. 22, 1986, as amended at 54 FR 11349, Mar. 17, 1989; 54 FR 13606, Apr. 4, 1989]

§ 471.34 Pretreatment standards for existing sources (PSES).

Except as provided in 40 CFR 403.7 and 403.13, any existing source subject to this subpart which introduces pollutants into a publicly owned treatment works must comply with 40 CFR part 403 and by August 23, 1988 achieve the following pretreatment standards for existing sources (PSES). The mass of wastewater pollutants in nickel-cobalt forming wastewater introduced into a POTW shall not exceed the following values:

(a) *Rolling spent neat oils—Subpart C—PSES.* There shall be no discharge of process wastewater pollutants.

(b) *Rolling spent emulsions.*

SUBPART C—PSES

Pollutant or pollutant property	Maximum for any 1 day	Maximum for monthly average
	mg/off-kg (pounds per million off-pounds) of nickel-cobalt rolled with emulsions	
Chromium	0.063	0.026
Nickel	0.094	0.063
Fluoride	10.1	4.49

(c) *Rolling contact cooling water.*

SUBPART C—PSES

Pollutant or pollutant property	Maximum for any 1 day	Maximum for monthly average
	mg/off-kg (pounds per million off-pounds) of nickel-cobalt rolled with water	
Chromium	0.028	0.011
Nickel	0.042	0.028
Fluoride	4.49	1.99

(d) *Tube Reducing Spent Lubricant—Subpart C—PSES.*

(1) There shall be no discharge of process wastewater pollutants except as provided under paragraph (d)(2) of this section.

(2) Process wastewater pollutants may be discharged, with no allowance for any pollutants discharged, provided the facility owner or operator demonstrates, on the basis of analytical methods set forth in or approved pursuant to 40 CFR part 136, that the concentrations of nitrosamine compounds in the wastewater discharged from the tube reducing process do not exceed 0.050 mg/l of N-nitrosodimethylamine, 0.020 mg/l of N-nitrosodiphenylamine, and 0.020 mg/l of N-nitrosodi-n-propylamine.

(3) The demonstration required under paragraph (d)(2) of this section shall be made once per month until the demonstration has been made for all three nitrosamine compounds for six consecutive months, after which time the demonstration may be made once per quarter. If a sample is found to contain any of the foregoing nitrosamine compounds at concentrations greater than those specified in paragraph (d)(2) of this section, the actions described in paragraph (d)(4) of this section shall be taken, and the demonstration required under paragraph (d)(2) of this section

shall be made once per month until it has been made for all three nitrosamine compounds for six consecutive months.

(4) If sampling results show that any of the foregoing nitrosamine compounds is present in the process wastewater at concentrations greater than those specified in paragraph (d)(2) of this section, the facility owner or operator shall ensure that, within thirty days of receiving written notification of the sampling results, there is no further discharge of tube reducing spent lubricant wastewater until the owner or operator:

(i) Performs a subsequent analysis which demonstrates that the concentrations of the foregoing nitrosamine compounds do not exceed the levels specified in paragraph (d)(2) of this section; or

(ii) Substitutes a new tube reducing lubricant and thereafter complies with the requirements of paragraph (d)(3) of this section; or

(iii) Determines the source of the pollutant whose concentration exceeded the level specified in paragraph (d)(2) of this section and demonstrates to the satisfaction of the POTW control authority that such source has been eliminated.

(5) The concentration limits specified in paragraph (d)(2) of this section apply at the point of discharge from the tube reducing process. However, sampling after the tube reducing wastewater has been commingled with other wastewaters is permitted if:

(i) Any dilution caused by the other wastewaters is taken into account in determining the appropriate (i.e., lower) allowable discharge concentration; and

(ii) An analytical method of sufficient sensitivity is used to measure the levels of each of the foregoing nitrosamine compounds in the wastewaters being sampled.

(e) *Drawing spent neat oils—Subpart C—PSES.* There shall be no discharge of process wastewater pollutants.

(f) *Drawing spent emulsions.*

SUBPART C—PSES

Pollutant or pollutant property	Maximum for any 1 day	Maximum for monthly average
	mg/off-kg (pounds per million off-pounds) of nickel-cobalt drawn with emulsions	
Chromium	0.036	0.014
Nickel	0.053	0.036
Fluoride	5.68	2.52

(g) *Extrusion spent lubricants—Subpart C—PSES.* There shall be no discharge of process wastewater pollutants.

(h) *Extrusion press or solution heat treatment contact cooling water.*

SUBPART C—PSES

Pollutant or pollutant property	Maximum for any 1 day	Maximum for monthly average
	mg/off-kg (pounds per million off-pounds) of extruded nickel-cobalt heat treated	
Chromium	0.031	0.013
Nickel	0.046	0.031
Fluoride	4.95	2.20

(i) *Extrusion press hydraulic fluid leakage.*

SUBPART C—PSES

Pollutant or pollutant property	Maximum for any 1 day	Maximum for monthly average
	mg/off-kg (pounds per million off-pounds) of nickel-cobalt extruded	
Chromium	0.086	0.034
Nickel	0.128	0.086
Fluoride	13.8	6.13

(j) *Forging equipment cleaning wastewater.*

SUBPART C—PSES

Pollutant or pollutant property	Maximum for any 1 day	Maximum for monthly average
	mg/off-kg (pounds per million off-pounds) of nickel-cobalt forged	
Chromium	0.002	0.0006
Nickel	0.002	0.002
Fluoride	0.238	0.106

(k) *Forging contact cooling water.*

SUBPART C—PSES

Pollutant or pollutant property	Maximum for any 1 day	Maximum for monthly average
	mg/off-kg (pounds per million off-pounds) of forged nickel-cobalt cooled with water	
Chromium	0.018	0.007
Nickel	0.026	0.018
Fluoride	2.82	1.25

(l) *Forging press hydraulic fluid leakage.*

SUBPART C—PSES

Pollutant or pollutant property	Maximum for any 1 day	Maximum for monthly average
	mg/off-kg (pounds per million off-pounds) of nickel-cobalt forged	
Chromium	0.069	0.028
Nickel	0.103	0.069
Fluoride	11.2	4.94

(m) *Forging spent lubricants—Subpart C—PSES.* There shall be no discharge of process wastewater pollutants.

(n) *Stationary casting contact cooling water.*

SUBPART C—PSES

Pollutant or pollutant property	Maximum for any 1 day	Maximum for monthly average
	mg/off-kg (pounds per million off-pounds) of nickel-cobalt cast with stationary methods	
Chromium	0.448	0.182
Nickel	0.666	0.448
Fluoride	72.0	32.0

(o) *Vacuum melting steam condensate—Subpart C—PSES.* There shall be no allowance for the discharge of wastewater pollutants.

(p) *Metal powder production atomization wastewater.*

SUBPART C—PSES

Pollutant or pollutant property	Maximum for any 1 day	Maximum for monthly average
	mg/off-kg (pounds per million off-pounds) of nickel-cobalt metal powder atomized	
Chromium	0.970	0.393
Nickel	1.44	0.970
Fluoride	156	69.2

(q) *Annealing and solution heat treatment contact cooling water—Subpart C—PSES.* There shall be no allowance for the discharge of wastewater pollutants.

(r) *Wet air pollution control scrubber blowdown.*

SUBPART C—PSES

Pollutant or pollutant property	Maximum for any 1 day	Maximum for monthly average
	mg/off-kg (pounds per million off-pounds) of nickel-cobalt formed	
Chromium	0.300	0.122
Nickel	0.446	0.300
Fluoride	48.2	21.4

(s) *Surface treatment spent baths.*

SUBPART C—PSES

Pollutant or pollutant property	Maximum for any 1 day	Maximum for monthly average
	mg/off-kg (pounds per million off-pounds) of nickel-cobalt surface treated	
Chromium	0.346	0.141
Nickel	0.514	0.346
Fluoride	55.7	24.7

(t) *Surface treatment rinse.*

SUBPART C—PSES

Pollutant or pollutant property	Maximum for any 1 day	Maximum for monthly average
	mg/off-kg (pounds per million off-pounds) of nickel-cobalt surface treated	
Chromium	0.873	0.354
Nickel	1.30	0.873
Fluoride	141	62.3

(u) *Alkaline cleaning spent baths.*

SUBPART C—PSES

Pollutant or pollutant property	Maximum for any 1 day	Maximum for monthly average
	mg/off-kg (pounds per million off-pounds) of nickel-cobalt alkaline cleaned	
Chromium	0.013	0.005
Nickel	0.019	0.013
Fluoride	2.02	0.895

(v) *Alkaline cleaning rinse.*

SUBPART C—PSES

Pollutant or pollutant property	Maximum for any 1 day	Maximum for monthly average
	mg/off-kg (pounds per million off-pounds) of nickel-cobalt alkaline cleaned	
Chromium	0.086	0.035
Nickel	0.128	0.086
Fluoride	13.9	6.15

(w) *Molten salt rinse.*

SUBPART C—PSES

Pollutant or pollutant property	Maximum for any 1 day	Maximum for monthly average
	mg/off-kg (pounds per million off-pounds) of nickel-cobalt treated with molten salt	
Chromium	0.312	0.127
Nickel	0.464	0.312
Fluoride	50.2	22.3

(x) *Ammonia rinse.*

SUBPART C—PSES

Pollutant or pollutant property	Maximum for any 1 day	Maximum for monthly average
	mg/off-kg (pounds per million off-pounds) of nickel-cobalt treated with ammonia solution	
Chromium	0.006	0.002
Nickel	0.008	0.006
Fluoride	0.881	0.391

(y) *Sawing or grinding spent emulsions.*

SUBPART C—PSES

Pollutant or pollutant property	Maximum for any 1 day	Maximum for monthly average
	mg/off-kg (pounds per million off-pounds) of nickel-cobalt sawed or ground with emulsions	
Chromium	0.015	0.006
Nickel	0.022	0.015
Fluoride	2.35	1.04

(z) *Sawing or grinding rinse.*

SUBPART C—PSES

Pollutant or pollutant property	Maximum for any 1 day	Maximum for monthly average
	mg/off-kg (pounds per million off-pounds) of sawed or ground nickel-cobalt rinsed	
Chromium	0.067	0.027
Nickel	0.100	0.067
Fluoride	10.8	4.78

(aa) *Steam cleaning condensate.*

SUBPART C—PSES

Pollutant or pollutant property	Maximum for any 1 day	Maximum for monthly average
	mg/off-kg (pounds per million off-pounds) of nickel-cobalt steam cleaned	
Chromium	0.011	0.005
Nickel	0.017	0.011
Fluoride	1.79	0.795

(bb) *Hydrostatic Tube Testing and Ultrasonic Testing Wastewater—Subpart C—PSES.* There shall be no allowance for the discharge of process wastewater pollutants.

(cc) *Degreasing Spent Solvents—Subpart C—PSES.* There shall be no discharge of process wastewater pollutants.

(dd) *Dye Penetrant Testing Wastewater.*

SUBPART C—PSES

Pollutant or pollutant property	Maximum for any 1 day	Maximum for monthly average
	mg/off-kg (pounds per million off-pounds) of nickel-cobalt tested with dye penetrant method	
Chromium	0.079	0.032
Nickel	0.117	0.079
Fluoride	12.7	5.63

(ee) *Electrocoating rinse.*

SUBPART C—PSES

Pollutant or pollutant property	Maximum for any 1 day	Maximum for monthly average
	mg/off-kg (pounds per million off-pounds) of nickel-cobalt electrocoated	
Chromium	1.25	0.506
Nickel	1.86	1.25
Fluoride	201	89.0

(ff) *Miscellaneous wastewater sources.*

SUBPART C—PSES

Pollutant or pollutant property	Maximum for any 1 day	Maximum for monthly average
	mg/off-kg (pounds per million off-pounds) of nickel-cobalt formed	
Chromium	0.091	0.037
Nickel	0.136	0.091
Fluoride	14.7	6.50

[50 FR 34270, Aug. 23, 1985; 51 FR 2885, Jan. 22, 1986, as amended at 54 FR 11349, Mar. 17, 1989; 54 FR 13606, Apr. 4, 1989]

§ 471.35 Pretreatment standards for new sources (PSNS).

Except as provided in 40 CFR 403.7, any new source subject to this subpart which introduces pollutants into a publicly owned treatment works must comply with 40 CFR part 403 and achieve the following pretreatment standards for new sources. The mass of wastewater pollutants in nickel-cobalt forming process wastewater introduced into a POTW shall not exceed the following values:

(a) *Rolling spent neat oils—Subpart C—PSNS.* There shall be no discharge of process wastewater pollutants.

(b) *Rolling spent emulsions.*

SUBPART C—PSNS

Pollutant or pollutant property	Maximum for any 1 day	Maximum for monthly average
	mg/off-kg (pounds per million off-pounds) of nickel-cobalt rolled with emulsions	
Chromium	0.063	0.026
Nickel	0.094	0.063
Fluoride	10.1	4.49

(c) *Rolling contact cooling water.*

SUBPART C—PSNS

Pollutant or pollutant property	Maximum for any 1 day	Maximum for monthly average
	mg/off-kg (pounds per million off-pounds) of nickel-cobalt rolled with water	
Chromium	0.028	0.012
Nickel	0.042	0.028
Fluoride	4.49	1.99

(d) *Tube Reducing Spent Lubricant—Subpart C—PSNS.*

(1) There shall be no discharge of process wastewater pollutants except as provided under paragraph (d)(2) of this section

(2) Process wastewater pollutants may be discharged, with no allowance for any pollutants discharged, provided the facility owner or operator demonstrates, on the basis of analytical methods set forth in or approved pursuant to 40 CFR part 136, that the concentrations of nitrosamine compounds in the wastewater discharged from the tube reducing process do not exceed 0.050 mg/l of N-nitrosodimethylamine, 0.020 mg/l of N-nitrosodiphenylamine, and 0.020 mg/l of N-nitrosodi-n-propylamine.

(3) The demonstration required under subparagraph (d)(2) of this section shall be made once per month until the demonstration has been made for all three nitrosamine compounds for six consecutive months, after which time the demonstration may be made once per quarter. If a sample is found to contain any of the foregoing nitrosamine compounds at concentrations greater than those specified in paragraph (d)(2) of this section, the actions described in paragraph (d)(4) of this section shall be

taken, and the demonstration required under paragraph (d)(2) of this section shall be made once per month until it has been made for all three nitrosamine compounds for six consecutive months.

(4) If sampling results show that any of the foregoing nitrosamine compounds is present in the process wastewater at concentrations greater than those specified in subparagraph (d)(2) of this section, the facility owner or operator shall ensure that, within thirty days of receiving written notification of the sampling results, there is no further discharge of tube reducing spent lubricant wastewater until the owner or operator:

(i) Performs a subsequent analysis which demonstrates that the concentrations of the foregoing nitrosamine compounds do not exceed the levels specified in paragraph (d)(2) of this section (2); or

(ii) Substitutes a new tube reducing lubricant and thereafter complies with the requirements of paragraph (d)(3) of this section; or

(iii) Determines the source of the pollutant whose concentration exceeded the level specified in subparagraph (2) above and demonstrates to the satisfaction of the POTW control authority that such source has been eliminated.

(5) The concentration limits specified in paragraph (d)(2) of this section apply at the point of discharge from the tube reducing process. However, sampling after the tube reducing wastewater has been commingled with other wastewaters is permitted if:

(i) Any dilution caused by the other wastewaters is taken into account in determining the appropriate (i.e., lower) allowable discharge concentration; and

(ii) An analytical method of sufficient sensitivity is used to measure the levels of each of the foregoing nitrosamine compounds in the wastewaters being sampled.

(e) *Drawing spent neat oils—Subpart C—PSNS*. There shall be no discharge of process wastewater pollutants.

(f) *Drawing spent emulsions*.

SUBPART C—PSNS

Pollutant or pollutant property	Maximum for any 1 day	Maximum for monthly average
	mg/off-kg (pounds per million off-pounds) of nickel-cobalt drawn with emulsions	
Chromium	0.036	0.015
Nickel	0.053	0.036
Fluoride	5.68	2.52

(g) *Extrusion spent lubricants—Subpart C—PSNS*. There shall be no discharge of process wastewater pollutants.

(h) *Extrusion press or solution heat treatment contact cooling water*.

SUBPART C—PSNS

Pollutant or pollutant property	Maximum for any 1 day	Maximum for monthly average
	mg/off-kg (pounds per million off-pounds) of extruded nickel-cobalt heat treated	
Chromium	0.031	0.013
Nickel	0.046	0.031
Fluoride	4.95	2.20

(i) *Extrusion press hydraulic fluid leakage*.

SUBPART C—NSPS

Pollutant or pollutant property	Maximum for any 1 day	Maximum for monthly average
	mg/off-kg (pounds per million off-pounds) of nickel-cobalt extruded	
Chromium	0.086	0.034
Nickel	0.128	0.086
Fluoride	13.8	6.13

(j) *Forging equipment cleaning wastewater*.

SUBPART C—PSNS

Pollutant or pollutant property	Maximum for any 1 day	Maximum for monthly average
	mg/off-kg (pounds per million off-pounds) of nickel-cobalt forged	
Chromium	0.002	0.0006
Nickel	0.002	0.002
Fluoride	0.238	0.106

(k) *Forging contact cooling water*.

SUBPART C—PSNS

Pollutant or pollutant property	Maximum for any 1 day	Maximum for monthly average
	mg/off-kg (pounds per million off-pounds) of forged nickel-cobalt cooled with water	
Chromium	0.018	0.007
Nickel	0.026	0.018
Fluoride	2.82	1.25

(l) *Forging press hydraulic fluid leakage.*

SUBPART C—PSNS

Pollutant or pollutant property	Maximum for any 1 day	Maximum for monthly average
	mg/off-kg (pounds per million off-pounds) of nickel-cobalt forged	
Chromium	0.069	0.028
Nickel	0.103	0.069
Fluoride	11.2	4.94

(m) *Forging spent lubricants—Subpart C—PSNS.* There shall be no discharge of process wastewater pollutants.

(n) *Stationary casting contact cooling water.*

SUBPART C—PSNS

Pollutant or pollutant property	Maximum for any 1 day	Maximum for monthly average
	mg/off-kg (pounds per million off-pounds) of nickel-cobalt cast with stationary methods	
Chromium	0.448	0.182
Nickel	0.666	0.448
Fluoride	72.0	32.0

(o) *Vacuum melting steam condensate—Subpart C—PSNS.* There shall be no allowance for the discharge of process wastewater pollutants.

(p) *Metal powder production atomization wastewater.*

SUBPART C—PSNS

Pollutant or pollutant property	Maximum for any 1 day	Maximum for monthly average
	mg/off-kg (pounds per million off-pounds) of nickel-cobalt metal powder atomized	
Chromium	0.970	0.393
Nickel	1.44	0.970
Fluoride	156	69.2

(q) *Annealing and Solution Heat Treatment Contact Cooling Water—Subpart C—PSNS.* There shall be no allowance for the discharge of process wastewater pollutant.

(r) *Wet Air Pollution Control Scrubber Blowdown.*

SUBPART C—PSNS

Pollutant or pollutant property	Maximum for any 1 day	Maximum for monthly average
	mg/off-kg (pounds per million off-pounds) of nickel-cobalt formed	
Chromium	0.300	0.122
Nickel	0.450	0.300
Fluoride	48.2	21.4

(s) *Surface treatment spent baths.*

SUBPART C—PSNS

Pollutant or pollutant property	Maximum for any 1 day	Maximum for monthly average
	mg/off-kg (pounds per million off-pounds) of nickel-cobalt surface treated	
Chromium	0.346	0.141
Nickel	0.515	0.346
Fluoride	55.7	24.7

(t) *Surface treatment rinse.*

SUBPART C—PSNS

Pollutant or pollutant property	Maximum for any 1 day	Maximum for monthly average
	mg/off-kg (pounds per million off-pounds) of nickel-cobalt surface treated	
Chromium	0.874	0.354
Nickel	1.30	0.873
Fluoride	141	62.3

(u) *Alkaline cleaning spent baths.*

SUBPART C—PSNS

Pollutant or pollutant property	Maximum for any 1 day	Maximum for monthly average
	mg/off-kg (pounds per million off-pounds) of nickel-cobalt alkaline cleaned	
Chromium	0.013	0.005
Nickel	0.019	0.013
Fluoride	2.02	0.895

(v) *Alkaline cleaning rinse.*

SUBPART C—PSNS

Pollutant or pollutant property	Maximum for any 1 day	Maximum for monthly average
	mg/off-kg (pounds per million off-pounds) of nickel-cobalt alkaline cleaned	
Chromium	0.086	0.035
Nickel	0.128	0.086
Fluoride	13.9	6.15

(w) *Molten salt rinse.*

SUBPART C—PSNS

Pollutant or pollutant property	Maximum for any 1 day	Maximum for monthly average
	mg/off-kg (pounds per million off-pounds) of nickel-cobalt treated with molten salt	
Chromium	0.312	0.127
Nickel	0.464	0.312
Fluoride	50.2	22.3

(x) *Ammonia rinse.*

SUBPART C—PSNS

Pollutant or pollutant property	Maximum for any 1 day	Maximum for monthly average
	mg/off-kg (pounds per million off-pounds) of nickel-cobalt treated with ammonia solution	
Chromium	0.006	0.002
Nickel	0.008	0.006
Fluoride	0.881	0.391

(y) *Sawing or grinding spent emulsions.*

SUBPART C—PSNS

Pollutant or pollutant property	Maximum for any 1 day	Maximum for monthly average
	mg/off-kg (pounds per million off-pounds) of nickel-cobalt sawed or ground with emulsions	
Chromium	0.015	0.006
Nickel	0.022	0.015
Fluoride	2.35	1.04

(z) *Sawing or grinding rinse.*

SUBPART C—PSNS

Pollutant or pollutant property	Maximum for any 1 day	Maximum for monthly average
	mg/off-kg (pounds per million off-pounds) of sawed or ground nickel-cobalt rinsed	
Chromium	0.067	0.027
Nickel	0.100	0.067
Fluoride	10.8	4.78

(aa) *Steam cleaning condensate.*

SUBPART C—PSNS

Pollutant or pollutant property	Maximum for any 1 day	Maximum for monthly average
	mg/off-kg (pounds per million off-pounds) of nickel-cobalt steam cleaned	
Chromium	0.011	0.005
Nickel	0.017	0.011
Fluoride	1.79	0.795

(bb) *Hydrostatic tube testing and ultrasonic testing wastewater—Subpart C—PSNS.* There shall be no allowance discharge of process wastewater pollutants.

(cc) *Degreasing spent solvents—Subpart C—PSNS.* There shall be no discharge of process wastewater pollutants.

(dd) *Dye penetrant testing wastewater.*

SUBPART C—PSNS

Pollutant or pollutant property	Maximum for any 1 day	Maximum for monthly average
	mg/off-kg (pounds per million off-pounds) of nickel-cobalt tested with dye penetrant method	
Chromium	0.079	0.032
Nickel	0.117	0.079
Fluoride	12.7	5.63

(ee) *Electrocoating rinse.*

SUBPART C—PSNS

Pollutant or pollutant property	Maximum for any 1 day	Maximum for monthly average
	mg/off-kg (pounds per million off-pounds) of nickel-cobalt electrocoated	
Chromium	1.25	0.506
Nickel	1.86	0.125
Fluoride	201	89.0

(ff) *Miscellaneous wastewater sources.*

SUBPART C—PSNS

Pollutant or pollutant property	Maximum for any 1 day	Maximum for monthly average
	mg/off-kg (pounds per million off-pounds) of nickel-cobalt formed	
Chromium	0.091	0.037
Nickel	0.136	0.091
Fluoride	14.7	6.50

[50 FR 34270, Aug. 23, 1985; 51 FR 2886, Jan. 22, 1986, as amended at 54 FR 11350, Mar. 17, 1989]

§ 471.36 Effluent limitations representing the degree of effluent reduction attainable by the application of the best conventional pollutant control technology (BCT). [Reserved]

Subpart D—Precious Metals Forming Subcategory

§ 471.40 Applicability; description of the precious metals forming subcategory.

This subpart applies to discharges of pollutants to waters of the United States, and introductions of pollutants into publicly owned treatment works from the process operations of the precious metals forming subcategory.

§ 471.41 Effluent limitations representing the degree of effluent reduction attainable by the application of the best practicable control technology currently available (BPT).

Except as provided in 40 CFR 125.30 through 125.32, any existing point source subject to this subpart must achieve the following effluent limitations for the process operations representing the degree of effluent reduction attainable by the application of the best practicable control technology currently available (BPT):

(a) *Rolling spent neat oils—Subpart D—BPT.* There shall be no discharge of process wastewater pollutants.

(b) *Rolling spent emulsions.*

SUBPART D—BPT

Pollutant or pollutant property	Maximum for any 1 day	Maximum for monthly average
	mg/off-kg (pounds per million off-pounds) of precious metals rolled with emulsions	
Chromium	0.026	0.012
Copper	0.147	0.077
Cyanide	0.023	0.010
Silver	0.032	0.013
Oil and grease	1.54	0.925
TSS	3.16	1.51
pH	(1)	(1)

[1] Within the range of 7.5 to 10.0 at all times.

(c) *Drawing spent neat oils—Subpart D—BPT.* There shall be no discharge of process wastewater pollutants.

(d) *Drawing spent emulsions.*

SUBPART D—BPT

Pollutant or pollutant property	Maximum for any 1 day	Maximum for monthly average
	mg/off-kg (pounds per million off-pounds) of precious metals drawn with emulsions	
Cadmium	0.016	0.007
Copper	0.091	0.048
Cyanide	0.014	0.006
Silver	0.020	0.008
Oil and grease	0.950	0.570
TSS	1.95	0.926
pH	(1)	(1)

[1] Within the range of 7.5 to 10.0 at all times.

(e) *Drawing spent soap solutions.*

SUBPART D—BPT

Pollutant or pollutant property	Maximum for any 1 day	Maximum for monthly average
	mg/off-kg (pounds per million off-pounds) of precious metals drawn with soap solutions	
Cadmium	0.001	0.0005
Copper	0.006	0.003
Cyanide	0.0009	0.0004
Silver	0.001	0.0006
Oil and grease	0.063	0.038
TSS	0.128	0.061
pH	(1)	(1)

1 Within the range of 7.5 to 10.0 at all times.

(f) *Metal powder production wet atomization wastewater.*

SUBPART D—BPT

Pollutant or pollutant property	Maximum for any 1 day	Maximum for monthly average
	mg/off-kg (pounds per million off-pounds) of precious metals powder wet atomized	
Cadmium	2.27	1.00
Copper	12.7	6.70
Cyanide	1.94	0.802
Silver	2.70	1.14
Oil and grease	134	80.2
TSS	274	130
pH	(1)	(1)

1 Within the range of 7.5 to 10.0 at all times.

(g) *Heat treatment contact cooling water.*

SUBPART D—BPT

Pollutant or pollutant property	Maximum for any 1 day	Maximum for monthly average
	mg/off-kg (pounds per million off-pounds) of extruded precious metals heat treated	
Cadmium	1.42	0.626
Copper	7.93	4.17
Cyanide	1.21	0.501
Silver	1.71	0.709
Oil and grease	83.4	50.1
TSS	171	81.3
pH	(1)	(1)

1 Within the range of 7.5 to 10.0 at all times.

(h) *Semi-continuous or continuous casting contact cooling water.*

SUBPART D—BPT

Pollutant or pollutant property	Maximum for any 1 day	Maximum for monthly average
	mg/off-kg (pounds per million off-pounds) of precious metals cast by the semi-continuous or continuous method	
Cadmium	3.50	1.55
Copper	19.6	10.3
Cyanide	2.99	1.24
Silver	4.23	1.75
Oil and grease	206	124
TSS	423	209
pH	(1)	(1)

1 Within the range of 7.5 to 10.0 at all times.

(i) *Stationary casting contact cooling water—Subpart D—BPT.* There shall be no discharge of process wastewater pollutants.

(j) *Direct chill casting contact cooling water.*

SUBPART D—BPT

Pollutant or pollutant property	Maximum for any 1 day	Maximum for monthly average
	mg/off-kg (pounds per million off-pounds) of precious metals cast by the direct chill method	
Cadmium	3.67	1.62
Copper	20.5	10.8
Cyanide	3.13	1.30
Silver	4.43	1.84
Oil and grease	216	130
TSS	443	211
pH	(1)	(1)

1 Within the range of 7.5 to 10.0 at all times.

(k) *Shot casting contact cooling water.*

SUBPART D—BPT

Pollutant or pollutant property	Maximum for any 1 day	Maximum for monthly average
	mg/off-kg (pounds per million off-pounds) of precious metals shot cast	
Cadmium	1.25	0.551
Copper	6.98	3.67
Cyanide	1.07	0.441
Silver	1.51	0.624
Oil and grease	73.4	44.1
TSS	151	71.6
pH	(1)	(1)

1 Within the range of 7.5 to 10.0 at all times.

(l) *Wet air pollution control scrubber blowdown—Subpart D—BPT.* There shall

be no discharge of process wastewater pollutants.

(m) *Pressure bonding contact cooling water.*

SUBPART D—BPT

Pollutant or pollutant property	Maximum for any 1 day	Maximum for monthly average
	mg/off-kg (pounds per million off-pounds) of precious metals and base metal pressure bonded	
Cadmium	0.029	0.013
Copper	0.159	0.084
Cyanide	0.024	0.010
Silver	0.034	0.014
Oil and grease	1.67	1.00
TSS	3.43	1.63
pH	(1)	(1)

1 Within the range of 7.5 to 10.0 at all times.

(n) *Surface treatment spent baths.*

SUBPART D—BPT

Pollutant or pollutant property	Maximum for any 1 day	Maximum for monthly average
	mg/off-kg (pounds per million off-pounds) of precious metals surface treated	
Cadmium	0.033	0.015
Copper	0.183	0.097
Cyanide	0.028	0.012
Silver	0.040	0.017
Oil and grease	1.93	1.16
TSS	3.95	1.88
pH	(1)	(1)

1 Within the range of 7.5 to 10.0 at all times.

(o) *Surface treatment rinse.*

SUBPART D—BPT

Pollutant or pollutant property	Maximum for any 1 day	Maximum for monthly average
	mg/off-kg (pounds per million off-pounds) of precious metals surface treated	
Cadmium	2.10	0.924
Copper	11.7	5.16
Cyanide	1.79	0.739
Silver	2.53	1.05
Oil and grease	123	73.9
TSS	253	120
pH	(1)	(1)

1 Within the range of 7.5 to 10.0 at all times.

(p) *Alkaline cleaning spent baths.*

SUBPART D—BPT

Pollutant or pollutant property	Maximum for any 1 day	Maximum for monthly average
	mg/off-kg (pounds per million off-pounds) of precious metals alkaline cleaned	
Cadmium	0.021	0.009
Copper	0.114	0.060
Cyanide	0.018	0.007
Silver	0.025	0.010
Oil and grease	1.20	0.720
TSS	2.46	1.170
pH	(1)	(1)

1 Within the range of 7.5 to 10.0 at all times.

(q) *Alkaline cleaning rinse.*

SUBPART D—BPT

Pollutant or pollutant property	Maximum for any 1 day	Maximum for monthly average
	mg/off-kg (pounds per million off-pounds) of precious metals alkaline cleaned	
Cadmium	3.81	1.68
Copper	21.3	11.2
Cyanide	3.25	1.35
Silver	4.59	1.91
Oil and grease	224	135
TSS	459	219
pH	(1)	(1)

1 Within the range of 7.5 to 10.0 at all times.

(r) *Alkaline cleaning prebonding wastewater.*

SUBPART D—BPT

Pollutant or pollutant property	Maximum for any 1 day	Maximum for monthly average
	mg/off-kg (pounds per million off-pounds) of precious metals and base metal cleaned prior to bonding	
Cadmium	3.95	1.74
Copper	22.1	11.6
Cyanide	3.37	1.39
Silver	4.76	1.97
Oil and grease	232	139
TSS	476	226
pH	(1)	(1)

1 Within the range of 7.5 to 10.0 at all times.

(s) *Tumbling or burnishing wastewater.*

SUBPART D—BPT

Pollutant or pollutant property	Maximum for any 1 day	Maximum for monthly average
	mg/off-kg (pounds per million off-pounds) of precious metals tumbled or burnished	
Cadmium	4.12	1.82
Copper	23.0	12.1
Cyanide	3.51	1.45
Silver	4.96	2.06
Oil and grease	242	145
TSS	496	236
pH	(1)	(1)

[1] Within the range of 7.5 to 10.0 at all times.

(t) *Sawing or grinding spent neat oils—Subpart D—BPT*. There shall be no discharge of process wastewater pollutants.

(u) *Sawing or grinding spent emulsions*.

SUBPART D—BPT

Pollutant or pollutant property	Maximum for any 1 day	Maximum for monthly average
	mg/off-kg (pounds per million off-pounds) of precious metals sawed or ground with emulsions	
Cadmium	0.032	0.014
Copper	0.178	0.094
Cyanide	0.027	0.011
Silver	0.039	0.016
Oil and grease	1.87	1.12
TSS	3.83	1.82
pH	(1)	(1)

[1] Within the range of 7.5 to 10.0 at all times.

(v) *Degreasing spent solvents—Subpart D—BPT*. There shall be no discharge of process wastewater pollutants.

[50 FR 34270, Aug. 23, 1985; 51 FR 2886, Jan. 22, 1986]

§ 471.42 Effluent limitations representing the degree of effluent reduction attainable by the application of the best available technology economically achievable (BAT).

Except as provided in 40 CFR 125.30 through 125.32, any existing point source subject to this subpart must achieve the following effluent limitations representing the degree of effluent reduction attainable by the application of the best available technology economically achievable (BAT):

(a) *Rolling spent neat oils—Subpart D—BAT*. There shall be no discharge of wastewater pollutants.

(b) *Rolling spent emulsions*.

SUBPART D—BAT

Pollutant or pollutant property	Maximum for any 1 day	Maximum for monthly average
	mg/off-kg (pounds per million off-pounds) of precious metals rolled with emulsions	
Cadmium	0.026	0.012
Copper	0.147	0.077
Cyanide	0.023	0.010
Silver	0.032	0.013

(c) *Drawing spent neat oils—Subpart D—BAT*. There shall be no discharge of process wastewater pollutants.

(d) *Drawing spent emulsions*.

SUBPART D—BAT

Pollutant or pollutant property	Maximum for any 1 day	Maximum for monthly average
	mg/off-kg (pounds per million off-pounds) of precious metals drawn with emulsions	
Cadmium	0.016	0.007
Copper	0.091	0.048
Cyanide	0.014	0.006
Silver	0.020	0.008

(e) *Drawing spent soap solutions*.

SUBPART D—BAT

Pollutant or pollutant property	Maximum for any 1 day	Maximum for monthly average
	mg/off-kg (pounds per million off-pounds) of precious metals drawn with soap solutions	
Cadmium	0.001	0.0005
Copper	0.006	0.003
Cyanide	0.0009	0.0004
Silver	0.002	0.0006

(f) *Metal powder production wet atomization wastewater*.

SUBPART D—BAT

Pollutant or pollutant property	Maximum for any 1 day	Maximum for monthly average
	mg/off-kg (pounds per million off-pounds) of precious metals powder wet atomized	
Cadmium	2.27	1.00
Copper	12.7	6.68
Cyanide	1.94	0.802
Silver	2.74	1.14

(g) *Heat treatment contact cooling water.*

SUBPART D—BAT

Pollutant or pollutant property	Maximum for any 1 day	Maximum for monthly average
	mg/off-kg (pounds per million off-pounds) of precious metals heat treated	
Cadmium	0.142	0.063
Copper	0.793	0.417
Cyanide	0.121	0.050
Silver	0.171	0.071

(h) *Semi-continuous and continuous casting contact cooling water.*

SUBPART D—BAT

Pollutant or pollutant property	Maximum for any 1 day	Maximum for monthly average
	mg/off-kg (pounds per million off-pounds) of precious metals cast by the semi-continuous or continuous method	
Cadmium	0.350	0.155
Copper	1.96	1.03
Cyanide	0.299	0.124
Silver	0.423	0.175

(i) *Stationary casting contact cooling water—Subpart D—BAT.* There shall be no discharge of process wastewater pollutants.

(j) *Direct chill casting contact cooling water.*

SUBPART D—BAT

Pollutant or pollutant property	Maximum for any 1 day	Maximum for monthly average
	mg/off-kg (pounds per million off-pounds) of precious metals cast by the direct chill method	
Cadmium	0.3676	0.162
Copper	2.05	1.08
Cyanide	0.313	0.130
Silver	0.443	0.184

(k) *Shot casting contact cooling water.*

SUBPART D—BAT

Pollutant or pollutant property	Maximum for any 1 day	Maximum for monthly average
	mg/off-kg (pounds per million off-pounds) of precious metals shot cast	
Cadmium	0.125	0.055
Copper	0.698	0.367
Cyanide	0.107	0.044
Silver	0.151	0.063

(l) *Wet air pollution control scrubber blowdown—Subpart D—BAT.* There shall be no discharge of process wastewater pollutants.

(m) *Pressure bonding contact cooling water.*

SUBPART D—BAT

Pollutant or pollutant property	Maximum for any 1 day	Maximum for monthly average
	mg/off-kg (pounds per million off-pounds) of precious metal and base metal pressure bonded	
Cadmium	0.0297	0.013
Copper	0.159	0.084
Cyanide	0.0247	0.010
Silver	0.0342	0.014

(n) *Surface treatment spent baths.*

SUBPART D—BAT

Pollutant or pollutant property	Maximum for any 1 day	Maximum for monthly average
	mg/off-kg (pounds per million off-pounds) of precious metals surface treated	
Cadmium	0.033	0.015
Copper	0.183	0.097
Cyanide	0.028	0.012
Silver	0.040	0.017

(o) *Surface treatment rinse.*

SUBPART D—BAT

Pollutant or pollutant property	Maximum for any 1 day	Maximum for monthly average
	mg/off-kg (pounds per million off-pounds) of precious metals surface treated	
Cadmium	0.210	0.093
Copper	1.17	0.616
Cyanide	0.179	0.074
Silver	0.253	0.105

(p) *Alkaline cleaning spent baths.*

SUBPART D—BAT

Pollutant or pollutant property	Maximum for any 1 day	Maximum for monthly average
	mg/off-kg (pounds per million off-pounds) of precious metals alkaline cleaned	
Cadmium	0.021	0.009
Copper	0.114	0.060
Cyanide	0.018	0.007
Silver	0.025	0.010

(q) *Alkaline cleaning rinse.*

SUBPART D—BAT

Pollutant or pollutant property	Maximum for any 1 day	Maximum for monthly average
	mg/off-kg (pounds per million off-pounds) of precious metals alkaline cleaned	
Cadmium	0.381	0.168
Copper	2.13	1.12
Cyanide	0.325	0.135
Silver	0.459	0.191

(r) *Alkaline cleaning prebonding wastewater.*

SUBPART D—BAT

Pollutant or pollutant property	Maximum for any 1 day	Maximum for monthly average
	mg/off-kg (pounds per million off-pounds) of precious metal and base metal cleaned prior to bonding	
Cadmium	0.400	0.174
Copper	2.210	1.16
Cyanide	0.337	0.139
Silver	0.476	0.197

(s) *Tumbling or burnishing wastewater.*

SUBPART D—BAT

Pollutant or pollutant property	Maximum for any 1 day	Maximum for monthly average
	mg/off-kg (pounds per million off-pounds) of precious metals tumbled or burnished	
Cadmium	0.412	0.182
Copper	2.300	1.21
Cyanide	0.351	0.145
Silver	0.496	0.206

(t) *Sawing or grinding spent neat oils—Subpart D—BAT.* There shall be no discharge of process wastewater pollutants.

(u) *Sawing or grinding spent emulsions.*

SUBPART D—BAT

Pollutant or pollutant property	Maximum for any 1 day	Maximum for monthly average
	mg/off-kg (pounds per million off-pounds) of precious metals sawed or ground with emulsions	
Cadmium	0.0327	0.014
Copper	0.178	0.094
Cyanide	0.0277	0.011
Silver	0.0381	0.016

(v) *Degreasing spent solvents—Subpart D—BAT.* There shall be no discharge of process wastewater pollutants.

[50 FR 34270, Aug. 23, 1985; 51 FR 2886, Jan. 22, 1986]

§ 471.43 New source performance standards (NSPS).

Any new source subject to this subpart must achieve the following new source performance standards (NSPS):

(a) *Rolling Spent Neat Oils—Subpart D—NSPS.* There shall be no discharge of process wastewater pollutants.

(b) *Rolling spent emulsions.*

SUBPART D—NSPS

Pollutant or pollutant property	Maximum for any 1 day	Maximum for monthly average
	mg/off-kg (pounds per million off-pounds) of precious metals rolled with emulsions	
Cadmium	0.026	0.012
Copper	0.147	0.077
Cyanide	0.023	0.010
Silver	0.032	0.013
Oil and grease	1.54	0.925
TSS	3.16	1.51
pH	(1)	(1)

[1] Within the range of 7.5 to 10.0 at all times.

(c) *Drawing spent neat oils—Subpart D—NSPS.* There shall be no discharge of process wastewater pollutants.

(d) *Drawing spent emulsions.*

SUBPART D—NSPS

Pollutant or pollutant property	Maximum for any 1 day	Maximum for monthly average
	mg/off-kg (pounds per million off-pounds) of precious metals drawn with emulsions	
Cadmium	0.017	0.007
Copper	0.091	0.048
Cyanide	0.014	0.006
Silver	0.020	0.008
Oil and grease	0.950	0.570
TSS	1.95	0.927
pH	(1)	(1)

[1] Within the range of 7.5 to 10.0 at all times.

(e) *Drawing spent soap solutions.*

SUBPART D—NSPS

Pollutant or pollutant property	Maximum for any 1 day	Maximum for monthly average
	mg/off-kg (pounds per million off-pounds) of precious metals drawn with soap solutions	
Cadmium	0.001	0.0005
Copper	0.006	0.003
Cyanide	0.0009	0.0004
Silver	0.002	0.0006
Oil and grease	0.063	0.038
TSS	0.128	0.061
pH	(1)	(1)

[1] Within the range of 7.5 to 10.0 at all times.

(f) *Metal powder production atomization wastewater.*

SUBPART D—NSPS

Pollutant or pollutant property	Maximum for any 1 day	Maximum for monthly average
	mg/off-kg (pounds per million off-pounds) of precious metals powder wet atomized	
Cadmium	2.27	1.00
Copper	12.7	6.68
Cyanide	1.94	0.802
Silver	2.74	1.14
Oil and grease	134	80.2
TSS	274	131
pH	(1)	(1)

[1] Within the range of 7.5 to 10.0 at all times.

(g) *Heat treatment contact cooling water.*

SUBPART D—NSPS

Pollutant or pollutant property	Maximum for any 1 day	Maximum for monthly average
	mg/off-kg (pounds per million off-pounds) of precious metals heat treated	
Cadmium	0.142	0.063
Copper	0.793	0.417
Cyanide	0.121	0.050
Silver	0.171	0.071
Oil and grease	8.34	5.01
TSS	17.1	8.13
pH	(1)	(1)

[1] Within the range of 7.5 to 10.0 at all times.

(h) *Semi-continuous and continuous casting contact cooling water.*

SUBPART D—NSPS

Pollutant or pollutant property	Maximum for any 1 day	Maximum for monthly average
	mg/off-kg (pounds per million off-pounds) of precious metals cast by the semi-continuous or continuous method	
Cadmium	0.350	0.155
Copper	1.96	1.03
Cyanide	0.299	0.124
Silver	0.423	0.175
Oil and grease	20.6	12.4
TSS	42.3	20.1
pH	(1)	(1)

[1] Within the range of 7.5 to 10.0 at all times.

(i) *Stationary casting contact cooling water—Subpart D—NSPS.* There shall be

no discharge of process wastewater pollutants.

(j) *Direct chill casting contact cooling water.*

SUBPART D—NSPS

Pollutant or pollutant property	Maximum for any 1 day	Maximum for monthly average
	mg/off-kg (pounds per million off-pounds) of precious metals cast by the direct chill method	
Cadmium	0.367	0.162
Copper	2.05	1.08
Cyanide	0.313	0.130
Silver	0.443	0.184
Oil and grease	21.6	13.0
TSS	44.3	21.1
pH	(1)	(1)

[1] Within the range of 7.5 to 10.0 at all times.

(k) *Shot casting contact cooling water.*

SUBPART D—NSPS

Pollutant or pollutant property	Maximum for any 1 day	Maximum for monthly average
	mg/off-kg (pounds per million off-pounds) of precious metals shot cast	
Cadmium	0.125	0.055
Copper	0.698	0.367
Cyanide	0.107	0.044
Silver	0.151	0.063
Oil and grease	7.34	4.41
TSS	15.1	7.16
pH	(1)	(1)

[1] Within the range of 7.5 to 10.0 at all times.

(l) *Wet air pollution control scrubber blowdown—Subpart D—NSPS.* There shall be no discharge of process wastewater pollutants.

(m) *Pressure bonding contact cooling water.*

SUBPART D—NSPS

Pollutant or pollutant property	Maximum for any 1 day	Maximum for monthly average
	mg/off-kg (pounds per million off-pounds) of precious metals and base metal pressure bonded	
Cadmium	0.029	0.013
Copper	0.159	0.084
Cyanide	0.024	0.010
Silver	0.034	0.014
Oil and grease	1.67	1.00
TSS	3.43	1.63
pH	(1)	(1)

[1] Within the range of 7.5 to 10.0 at all times.

(n) *Surface treatment spent baths.*

SUBPART D—NSPS

Pollutant or pollutant property	Maximum for any 1 day	Maximum for monthly average
	mg/off-kg (pounds per million off-pounds) of precious metals surface treated	
Cadmium	0.033	0.015
Copper	0.183	0.097
Cyanide	0.028	0.012
Silver	0.040	0.017
Oil and grease	1.93	1.16
TSS	3.95	1.88
pH	(1)	(1)

[1] Within the range of 7.5 to 10.0 at all times.

(o) *Surface treatment rinse.*

SUBPART D—NSPS

Pollutant or pollutant property	Maximum for any 1 day	Maximum for monthly average
	mg/off-kg (pounds per million off-pounds) of precious metals surface treated	
Cadmium	0.210	0.093
Copper	1.17	0.616
Cyanide	0.179	0.074
Silver	0.253	0.105
Oil and grease	12.3	7.39
TSS	25.3	12.0
pH	(1)	(1)

[1] Within the range of 7.5 to 10.0 at all times.

(p) *Alkaline cleaning spent baths.*

SUBPART D—NSPS

Pollutant or pollutant property	Maximum for any 1 day	Maximum for monthly average
	mg/off-kg (pounds per million off-pounds) of precious metals alkaline cleaned	
Cadmium	0.021	0.009
Copper	0.114	0.060
Cyanide	0.018	0.007
Silver	0.025	0.010
Oil and grease	1.20	0.720
TSS	2.46	1.17
pH	(1)	(1)

[1] Within the range of 7.5 to 10.0 at all times.

(q) *Alkaline cleaning rinse.*

SUBPART D—NSPS

Pollutant or pollutant property	Maximum for any 1 day	Maximum for monthly average
	mg/off-kg (pounds per million off-pounds) of precious metals alkaline cleaned	
Cadmium	0.381	0.168
Copper	2.13	1.112
Cyanide	0.325	0.135
Silver	0.459	0.191
Oil and grease	22.4	13.5
TSS	45.9	21.9
pH	(1)	(1)

[1] Within the range of 7.5 to 10.0 at all times.

(r) *Alkaline cleaning pre-bonding wastewater.*

SUBPART D—NSPS

Pollutant or pollutant property	Maximum for any 1 day	Maximum for monthly average
	mg/off-kg (pounds per million off-pounds) of precious metals and base metal cleaned prior to bonding	
Cadmium	0.400	0.174
Copper	2.21	1.16
Cyanide	0.337	0.139
Silver	0.476	0.197
Oil and grease	23.2	13.9
TSS	47.6	22.6
pH	(1)	(1)

[1] Within the range of 7.5 to 10.0 at all times.

(s) *Tumbling or burnishing wastewater.*

SUBPART D—NSPS

Pollutant or pollutant property	Maximum for any 1 day	Maximum for monthly average
	mg/off-kg (pounds per million off-pounds) of precious metals tumbled or burnished	
Cadmium	0.412	0.182
Copper	2.30	1.21
Cyanide	0.351	0.145
Silver	0.496	0.206
Oil and grease	24.2	14.5
TSS	49.6	23.6
pH	(1)	(1)

[1] Within the range of 7.5 to 10.0 at all times.

(t) *Sawing or grinding spent neat oils—Subpart D—NSPS.* There shall be no discharge of process wastewater pollutants.

(u) *Sawing or grinding spent emulsions.*

SUBPART D—NSPS

Pollutant or pollutant property	Maximum for any 1 day	Maximum for monthly average
	mg/off-kg (pounds per million off-pounds) of precious metals sawed or ground with emulsions	
Cadmium	0.032	0.014
Copper	0.178	0.094
Cyanide	0.027	0.011
Silver	0.038	0.016
Oil and grease	1.87	1.12
TSS	3.83	1.82
pH	(1)	(1)

[1] Within the range of 7.5 to 10.0 at all times.

(v) *Degreasing spent solvents—Subpart D—NSPS.* There shall be no discharge of process wastewater pollutants.

[50 FR 34270, Aug. 23, 1985; 51 FR 2886, Jan. 22, 1986]

§ 471.44 Pretreatment standards for existing sources (PSES).

Except as provided in 40 CFR 403.7 and 403.13, any existing source subject to this subpart which introduces pollutants into a publicly owned treatment works must comply with 40 CFR part 403 and by August 23, 1985 achieve the following pretreatment standards for existing sources (PSES). The mass of wastewater pollutants in precious metals forming process wastewater introduced into a POTW shall not exceed the following values:

(a) *Rolling spent neat oils—Subpart D—PSES.* There shall be no discharge of process wastewater pollutants.

(b) *Rolling spent emulsions.*

SUBPART D—PSES

Pollutant or pollutant property	Maximum for any 1 day	Maximum for monthly average
	mg/off-kg (pounds per million off-pounds) of precious metals rolled with emulsions	
Cadmium	0.026	0.012
Copper	0.147	0.077
Cyanide	0.023	0.010
Silver	0.032	0.013

(c) *Drawing spent neat oils—Subpart D—PSES.* There shall be no discharge of process wastewater pollutants.

(d) *Drawing spent emulsions.*

SUBPART D—PSES

Pollutant or pollutant property	Maximum for any 1 day	Maximum for monthly average
	mg/off-kg (pounds per million off-pounds) of precious metals drawn with emulsions	
Cadmium	0.016	0.007
Copper	0.091	0.048
Cyanide	0.014	0.006
Silver	0.020	0.008

(e) *Drawing spent soap solutions.*

SUBPART D—PSES

Pollutant or pollutant property	Maximum for any 1 day	Maximum for monthly average
	mg/off-kg (pounds per million off-pounds) of precious metals drawn with soap solutions	
Cadmium	0.001	0.0005
Copper	0.006	0.003
Cyanide	0.0009	0.0004
Silver	0.002	0.0006

(f) *Metal powder production atomization wastewater.*

SUBPART D—PSES

Pollutant or pollutant property	Maximum for any 1 day	Maximum for monthly average
	mg/off-kg (pounds per million off-pounds) of precious metals powder wet atomized	
Cadmium	2.27	1.00
Copper	12.7	6.68
Cyanide	1.94	0.802
Silver	2.74	1.14

(g) *Heat treatment contact cooling water.*

SUBPART D—PSES

Pollutant or pollutant property	Maximum for any 1 day	Maximum for monthly average
	mg/off-kg (pounds per million off-pounds) of precious metals heat treated	
Cadmium	0.142	0.063
Copper	0.793	0.417
Cyanide	0.121	0.050
Silver	0.171	0.071

(h) *Semi-continuous and continuous casting contact cooling water.*

SUBPART D—PSES

Pollutant or pollutant property	Maximum for any 1 day	Maximum for monthly average
	mg/off-kg (pounds per million off-pounds) of precious metals cast by the semi-continuous or continuous method	
Cadmium	0.350	0.155
Copper	1.96	1.03
Cyanide	0.299	0.124
Silver	0.423	0.175

(i) *Stationary casting contact cooling water—Subpart D—PSES.* There shall be no discharge of process wastewater pollutants.

(j) *Direct chill casting contact cooling water.*

SUBPART D—PSES

Pollutant or pollutant property	Maximum for any one day	Maximum for monthly average
	mg/off-kg (pounds per million off-pounds) of precious metals cast by the direct chill method	
Cadmium	0.367	0.162
Copper	2.05	1.08
Cyanide	0.313	0.130
Silver	0.443	0.184

(k) *Shot casting contact cooling water.*

SUBPART D—PSES

Pollutant or pollutant property	Maximum for any 1 day	Maximum for monthly average
	mg/off-kg (pounds per million off-pounds) of precious metals shot cast	
Cadmium	0.125	0.055
Copper	0.698	0.367
Cyanide	0.107	0.044
Silver	0.151	0.063

(l) *Wet air pollution control scrubber blowdown—Subpart D—PSES.* There shall be no discharge of process wastewater pollutants.

(m) *Pressure bonding contact cooling water.*

SUBPART D—PSES

Pollutant or pollutant property	Maximum for any 1 day	Maximum for monthly average
	mg/off-kg (pounds per million off-pounds) of precious metal and base metal pressure bonded	
Cadmium	0.029	0.013
Copper	0.159	0.084
Cyanide	0.024	0.010
Silver	0.034	0.014

(n) *Surface treatment spent baths.*

SUBPART D—PSES

Pollutant or pollutant property	Maximum for any 1 day	Maximum for monthly average
	mg/off-kg (pounds per million off-pounds) of precious metals surface treated	
Cadmium	0.033	0.015
Copper	0.183	0.097
Cyanide	0.028	0.012
Silver	0.040	0.017

(o) *Surface treatment rinse.*

SUBPART D—PSES

Pollutant or pollutant property	Maximum for any 1 day	Maximum for monthly average
	mg/off-kg (pounds per million off-pounds) of precious metals surface treated	
Cadmium	0.210	0.093
Copper	1.17	0.616
Cyanide	0.179	0.074
Silver	0.253	0.105

(p) *Alkaline cleaning spent baths.*

SUBPART D—PSES

Pollutant or pollutant property	Maximum for any 1 day	Maximum for monthly average
	mg/off-kg (pounds per million off-pounds) of precious metals alkaline cleaned	
Cadmium	0.021	0.009
Copper	0.114	0.060
Cyanide	0.018	0.007
Silver	0.025	0.010

(q) *Alkaline cleaning rinse.*

SUBPART D—PSES

Pollutant or pollutant property	Maximum for any 1 day	Maximum for monthly average
	mg/off-kg (pounds per million off-pounds) of precious metals alkaline cleaned	
Cadmium	0.381	0.168
Copper	2.13	1.12
Cyanide	0.325	0.135
Silver	0.459	0.191

(r) *Alkaline cleaning prebonding wastewater.*

SUBPART D—PSES

Pollutant or pollutant property	Maximum for any 1 day	Maximum for monthly average
	mg/off-kg (pounds per million off-pounds) of precious metals and base metal cleaned prior to bonding	
Cadmium	0.400	0.174
Copper	2.210	1.16
Cyanide	0.337	0.139
Silver	0.476	0.197

(s) *Tumbling or burnishing wastewater.*

SUBPART D—PSES

Pollutant or pollutant property	Maximum for any 1 day	Maximum for monthly average
	mg/off-kg (pounds per million off-pounds) of precious metals tumbled or burnished	
Cadmium	0.412	0.182
Copper	2.300	1.21
Cyanide	0.351	0.145
Silver	0.496	0.206

(t) *Sawing or grinding spent neat oils—Subpart D—PSES.* There shall be no discharge of process wastewater pollutants.

(u) *Sawing or grinding spent emulsions.*

SUBPART D—PSES

Pollutant or pollutant property	Maximum for any 1 day	Maximum for monthly average
	mg/off-kg (pounds per million off-pounds) of precious metals sawed or ground with emulsions	
Cadmium	0.032	0.014
Copper	0.178	0.094
Cyanide	0.027	0.011
Silver	0.038	0.016

(v) *Degreasing spent solvents—Subpart D—PSNS.* There shall be no discharge of process wastewater pollutants.

[50 FR 34270, Aug. 23, 1985; 51 FR 2886, Jan. 22, 1986]

§ 471.45 Pretreatment standards for new sources (PSNS).

Except as provided in 40 CFR 403.7, any new source subject to this subpart which introduces pollutants into a publicly owned treatment works must comply with 40 CFR part 403 and achieve the following pretreatment standards for new sources (PSNS). The mass of wastewater pollutants in precious metals forming wastewater introduced into a POTW shall not exceed the following values:

(a) *Rolling spent neat oils—Subpart D—PSNS.* There shall be no discharge of process wastewater pollutants.

(b) *Rolling spent emulsions.*

SUBPART D—PSNS

Pollutant or pollutant property	Maximum for any 1 day	Maximum for monthly average
	mg/off-kg (pounds per million off-pounds) of precious metals rolled with emulsions	
Cadmium	0.026	0.012
Copper	0.147	0.077
Cyanide	0.023	0.010
Silver	0.032	0.013

(c) *Drawing spent neat oils—Subpart D—PSNS.* There shall be no discharge of process wastewater pollutants.

(d) *Drawing spent emulsions.*

SUBPART D—PSNS

Pollutant or pollutant property	Maximum for any 1 day	Maximum for monthly average
	mg/off-kg (pounds per million off-pounds) of precious metals drawn with emulsions	
Cadmium	0.016	0.007
Copper	0.091	0.048
Cyanide	0.014	0.006
Silver	0.020	0.008

(e) *Drawing spent soap solutions.*

SUBPART D—PSNS

Pollutant or pollutant property	Maximum for any 1 day	Maximum for monthly average
	mg/off-kg (pounds per million off-pounds) of precious metals drawn with soap solutions	
Cadmium	0.001	0.0005
Copper	0.006	0.003
Cyanide	0.0009	0.0004
Silver	0.002	0.0006

(f) *Metal powder production wet atomization wastewater.*

SUBPART D—PSNS

Pollutant or pollutant property	Maximum for any 1 day	Maximum for monthly average
	mg/off-kg (pounds per million off-pounds) of precious metals powder wet atomized	
Cadmium	2.27	1.00
Copper	12.7	6.68
Cyanide	1.94	0.802
Silver	2.74	1.14

(g) *Heat treatment contact cooling water.*

SUBPART D—PSNS

Pollutant or pollutant property	Maximum for any 1 day	Maximum for monthly average
	mg/off-kg (pounds per million off-pounds) of extended precious metals heat treated	
Cadmium	0.142	0.063
Copper	0.793	0.417
Cyanide	0.121	0.050
Silver	0.171	0.071

(h) *Semi-continuous and continuous casting contact cooling water.*

SUBPART D—PSNS

Pollutant or pollutant property	Maximum for any 1 day	Maximum for monthly average
	mg/off-kg (pounds per million off-pounds) of precious metals cast by the semi-continuous or continuous method	
Cadmium	0.350	0.155
Copper	1.96	1.03
Cyanide	0.299	0.124
Silver	0.423	0.175

(i) *Stationary casting contact cooling water—Subpart D—PSNS.* There shall be no discharge of process wastewater pollutants.

(j) *Direct chill casting contact cooling water.*

SUBPART D—PSNS

Pollutant or pollutant property	Maximum for any 1 day	Maximum for monthly average
	mg/off-kg (pounds per million off-pounds) of precious metals cast by the direct chill method	
Cadmium	0.367	0.162
Copper	2.05	1.08
Cyanide	0.313	0.130
Silver	0.443	0.184

(k) *Shot casting contact cooling water.*

SUBPART D—PSNS

Pollutant or pollutant property	Maximum for any 1 day	Maximum for monthly average
	mg/off-kg (pounds per million off-pounds) of precious metals shot cast	
Cadmium	0.125	0.055
Copper	0.698	0.367
Cyanide	0.107	0.044
Silver	0.151	0.0631

(l) *Wet air pollution control scrubber blowdown—Subpart D—PSNS.* There shall be no discharge of process wastewater pollutants.

(m) *Pressure bonding contact cooling water.*

SUBPART D—PSNS

Pollutant or pollutant property	Maximum for any 1 day	Maximum for monthly average
	mg/off-kg (pounds per million off-pounds) of precious metals and base metal pressure bonded	
Cadmium	0.029	0.013
Copper	0.159	0.084
Cyanide	0.024	0.010
Silver	0.034	0.014

(n) *Surface treatment spent baths.*

SUBPART D—PSNS

Pollutant or pollutant property	Maximum for any 1 day	Maximum for monthly average
	mg/off-kg (pounds per million off-pounds) of precious metals surface treated	
Cadmium	0.033	0.015
Copper	0.183	0.097
Cyanide	0.028	0.012
Silver	0.040	0.017

(o) *Surface treatment rinse.*

SUBPART D—PSNS

Pollutant or pollutant property	Maximum for any 1 day	Maximum for monthly average
	mg/off-kg (pounds per million off-pounds) of precious metals surface treated	
Cadmium	0.210	0.093
Copper	1.17	0.616
Cyanide	0.179	0.074
Silver	0.253	0.105

(p) *Alkaline cleaning spent baths.*

SUBPART D—PSNS

Pollutant or pollutant property	Maximum for any 1 day	Maximum for monthly average
	mg/off-kg (pounds per million off-pounds) of precious metals alkaline cleaned	
Cadmium	0.021	0.009
Copper	0.114	0.060
Cyanide	0.018	0.007
Silver	0.025	0.010

(q) *Alkaline cleaning rinse.*

SUBPART D—PSNS

Pollutant or pollutant property	Maximum for any 1 day	Maximum for monthly average
	mg/off-kg (pounds per million off-pounds) of precious metals alkaline cleaned	
Cadmium	0.381	0.168
Copper	2.13	1.12
Cyanide	0.325	0.135
Silver	0.459	0.191

(r) *Alkaline cleaning pre-bonding wastewater.*

SUBPART D—PSNS

Pollutant or pollutant property	Maximum for any 1 day	Maximum for monthly average
	mg/off-kg (pounds per million off-pounds) of precious metals and base metal cleaned prior to bonding	
Cadmium	0.400	0.174
Copper	2.21	1.16
Cyanide	0.337	0.139
Silver	0.476	0.197

(s) *Tumbling or burnishing wastewater.*

SUBPART D—PSNS

Pollutant or pollutant property	Maximum for any 1 day	Maximum for monthly average
	mg/off-kg (pounds per million off-pounds) of precious metals tumbled or burnished	
Cadmium	0.412	0.182
Copper	2.30	1.21
Cyanide	0.351	0.145
Silver	0.496	0.206

(t) *Sawing or grinding spent neat oils—Subpart D—PSNS.* There shall be no discharge of process wastewater pollutants.

(u) *Sawing or grinding spent emulsions.*

SUBPART D—PSNS

Pollutant or pollutant property	Maximum for any 1 day	Maximum for monthly average
	mg/off-kg (pounds per million off-pounds) of precious metals sawed or ground with emulsions	
Cadmium	0.032	0.014
Copper	0.178	0.094
Cyanide	0.027	0.011
Silver	0.038	0.016

(v) *Degreasing spent solvents—Subpart D—PSNS.* There shall be no discharge of process wastewater pollutants.

[50 FR 34270, Aug. 23, 1985; 51 FR 2886, Jan. 22, 1986]

§ 471.46 Effluent limitations representing the degree of effluent reduction attainable by the application of the best conventional pollutant control technology (BCT). [Reserved]

Subpart E—Refractory Metals Forming Subcategory

§ 471.50 Applicability; description of the refractory metals forming subcategory.

This subpart applies to discharges of pollutants to waters of the United States, and introductions of pollutants into publicly owned treatment works from the process operations of the refractory metals forming subcategory.

§ 471.51 Effluent limitations representing the degree of effluent reduction attainable by the application of the best practicable control technology currently available (BPT).

Except as provided in 40 CFR 125.30 through 125.32, any existing point source subject to this subpart must achieve the following effluent limitations for the process operations representing the degree of effluent reduction attainable by the application of the best practicable control technology currently available (BPT):

(a) *Rolling spent neat oils and graphite based lubricants—Subpart E—BPT*. There shall be no discharge of process wastewater pollutants.

(b) *Rolling spent emulsions*.

SUBPART E—BPT

Pollutant or pollutant property	Maximum for any 1 day	Maximum for monthly average
	mg/off-kg (pounds per million off-pounds) of refractory metals rolled with emulsions	
Copper	0.815	0.429
Nickel	0.824	0.545
Fluoride	25.5	11.3
Molybdenum	2.84	1.47
Oil and grease	8.58	5.15
TSS	17.6	8.37
pH	(1)	(1)

1 Within the range of 7.5 to 10.0 at all times.

(c) *Drawing spent lubricants—Subpart E—BPT*. There shall be no discharge of process wastewater pollutants.

(d) *Extrusion spent lubricants—Subpart E—BPT*. There shall be no discharge of process wastewater pollutants.

(e) *Extrusion press hydraulic fluid leakage*.

SUBPART E—BPT

Pollutant or pollutant property	Maximum for any 1 day	Maximum for monthly average
	mg/off-kg (pounds per million off-pounds) of refractory metals extruded	
Copper	2.26	1.19
Nickel	2.29	1.51
Fluoride	70.8	31.4
Molybdenum	7.87	4.07
Oil and grease	23.8	14.3
TSS	48.8	23.2
pH	(1)	(1)

1 Within the range of 7.5 to 10.0 at all times.

(f) *Forging spent lubricants—Subpart E—BPT*. There shall be no discharge of process wastewater pollutants.

(g) *Forging contact cooling water*.

SUBPART E—BPT

Pollutant or pollutant property	Maximum for any 1 day	Maximum for monthly average
	mg/off-kg (pounds per million off-pounds) of forged refractory metals cooled with water	
Copper	0.614	0.323
Nickel	0.620	0.410
Fluoride	19.2	8.53
Molybdenum	2.14	1.11
Oil and grease	6.46	3.88
TSS	13.3	6.30
pH	(1)	(1)

1 Within the range of 7.5 to 10.0 at all times.

(h) *Equipment cleaning wastewater*.

SUBPART E—BPT

Pollutant or pollutant property	Maximum for any 1 day	Maximum for monthly average
	mg/off-kg (pounds per million off-pounds) of refractory metals formed	
Copper	2.59	1.36
Nickel	2.61	1.73
Fluoride	80.9	35.9
Molybdenum	8.99	4.65
Oil and grease	27.2	16.3
TSS	55.8	26.5
pH	(1)	(1)

1 Within the range of 7.5 to 10.0 at all times.

(i) *Metal powder production wastewater*.

SUBPART E—BPT

Pollutant or pollutant property	Maximum for any 1 day	Maximum for monthly average
	mg/off-kg (pounds per million off-pounds) of refractory metals powder produced	
Copper	0.534	0.281
Nickel	0.540	0.357
Fluoride	16.70	7.42
Molybdenum	1.86	0.961
Oil and grease	5.62	3.37
TSS	11.5	5.48
pH	(1)	(1)

1 Within the range of 7.5 to 10.0 at all times.

(j) *Metal powder production floor wash wastewater—Subpart E—BPT.* There shall be no discharge of process wastewater pollutants.

(k) *Metal powder pressing spent lubricants—Subpart E—BPT.* There shall be no discharge of process wastewater pollutants.

(l) *Surface treatment spent baths.*

SUBPART E—BPT

Pollutant or pollutant property	Maximum for any 1 day	Maximum for monthly average
	mg/off-kg (pounds per million off-pounds) of refractory metals surface treated	
Copper	0.739	0.389
Nickel	0.747	0.494
Fluoride	23.2	10.3
Molybdenum	2.57	1.33
Oil and grease	7.78	4.68
TSS	16.0	7.59
pH	(1)	(1)

1 Within the range of 7.5 to 10.0 at all times.

(m) *Surface treatment rinse.*

SUBPART E—BPT

Pollutant or pollutant property	Maximum for any 1 day	Maximum for monthly average
	mg/off-kg (pounds per million off-pounds) of refractory metals surface treated	
Copper	230	121
Nickel	232	154
Fluoride	7,200	3,200
Molybdenum	800	414
Oil and grease	2,420	1,450
TSS	4,960	2,360
pH	(1)	(1)

1 Within the range of 7.5 to 10.0 at all times.

(n) *Alkaline cleaning spent baths.*

SUBPART E—BPT

Pollutant or pollutant property	Maximum for any 1 day	Maximum for monthly average
	mg/off-kg (pounds per million off-pounds) of refractory metals alkaline cleaned	
Copper	0.635	0.334
Nickel	0.641	0.424
Fluoride	19.9	8.82
Molybdenum	2.21	1.14
Oil and grease	6.68	4.01
TSS	13.7	6.51
pH	(1)	(1)

1 Within the range of 7.5 to 10.0 at all times.

(o) *Alkaline cleaning rinse.*

SUBPART E—BPT

Pollutant or pollutant property	Maximum for any 1 day	Maximum for monthly average
	mg/off-kg (pounds per million off-pounds) of refractory metals alkaline cleaned	
Copper	1,550	816
Nickel	1,570	1,040
Fluoride	48,600	21,600
Molybdenum	5,400	2,790
Oil and grease	16,300	9,790
TSS	33,500	15,900
pH	(1)	(1)

1 Within the range of 7.5 to 10.0 at all times.

(p) *Molten salt rinse.*

SUBPART E—BPT

Pollutant or pollutant property	Maximum for any 1 day	Maximum for monthly average
	mg/off-kg (pounds per million off-pounds) of refractory metals treated with molten salt	
Copper	12.1	6.33
Nickel	12.2	8.04
Fluoride	377	167
Molybdenum	41.9	21.7
Oil and grease	127	76.0
TSS	260	124
pH	(1)	(1)

1 Within the range of 7.5 to 10.0 at all times.

(q) *Tumbling or burnishing wastewater.*

SUBPART E—BPT

Pollutant or pollutant property	Maximum for any 1 day	Maximum for monthly average
	mg/off-kg (pounds per million off-pounds) of refractory metals tumbled or burnished	
Copper	23.8	12.5
Nickel	24.0	15.9
Fluoride	744	330
Molybdenum	82.7	42.8
Oil and grease	250	150
TSS	513	244
pH	(1)	(1)

Within the range of 7.5 to 10.0 at all times.

(r) *Sawing or grinding spent neat oils—Subpart E—BPT.* There shall be no discharge of process wastewater pollutants.

(s) *Sawing or grinding spent emulsions.*

SUBPART E—BPT

Pollutant or pollutant property	Maximum for any 1 day	Maximum for monthly average
	mg/off-kg (pounds per million off-pounds) of refractory metals sawed or ground with emulsions	
Copper	0.565	0.297
Nickel	0.570	0.377
Fluoride	17.7	7.84
Molybdenum	1.97	1.02
Oil and grease	5.94	3.57
TSS	12.2	5.79
pH	(1)	(1)

[1] Within the range of 7.5 to 10.0 at all times.

(t) *Sawing or grinding contact cooling water.*

SUBPART E—BPT

Pollutant or pollutant property	Maximum for any 1 day	Maximum for monthly average
	mg/off-kg (pounds per million off-pounds) of refractory metals sawed or ground with contact cooling water	
Copper	46.2	24.3
Nickel	46.7	30.9
Fluoride	1450	642
Molybdenum	161	83.1
Oil and grease	486	292
TSS	997	474
pH	(1)	(1)

[1] Within the range of 7.5 to 10.0 at all times.

(u) *Sawing or grinding rinse.*

SUBPART E—BPT

Pollutant or pollutant property	Maximum for any 1 day	Maximum for monthly average
	mg/off-kg (pounds per million off-pounds) of sawed or ground refractory metals rinsed	
Copper	0.257	0.135
Nickel	0.259	0.172
Fluoride	8.03	3.57
Molybdenum	0.893	0.462
Oil and grease	2.70	1.62
TSS	5.54	2.63
pH	(1)	(1)

[1] Within the range of 7.5 to 10.0 at all times.

(v) *Wet air pollution control scrubber blowdown.*

SUBPART E—BPT

Pollutant or pollutant property	Maximum for any 1 day	Maximum for monthly average
	mg/off-kg (pounds per million off-pounds) of refractory metals sawed or ground, surface coated or surface treated	
Copper	1.50	0.787
Nickel	1.51	1.00
Fluoride	46.8	20.8
Molybdenum	5.20	2.69
Oil and grease	15.8	9.45
TSS	32.3	15.4
pH	(1)	(1)

[1] Within the range of 7.5 to 10.0 at all times.

(w) *Miscellaneous wastewater sources.*

SUBPART E—BPT

Pollutant or pollutant property	Maximum for any 1 day	Maximum for monthly average
	mg/off-kg (pounds per million off-pounds) of refractory metals formed	
Copper	0.656	0.345
Nickel	0.663	0.438
Fluoride	20.6	9.11
Molybdenum	2.28	1.18
Oil and grease	6.9	4.14
TSS	14.2	6.73
pH	(1)	(1)

[1] Within the range of 7.5 to 10.0 at all times.

(x) *Dye penetrant testing wastewater.*

SUBPART E—BPT

Pollutant or pollutant property	Maximum for any 1 day	Maximum for monthly average
	mg/off-kg (pounds per million off-pounds) of refractory metals tested	
Copper	0.150	0.078
Nickel	0.150	0.099
Fluoride	4.60	2.00
Molybdenum	0.513	0.266
Oil and grease	1.60	0.930
TSS	3.20	1.50
pH	(1)	(1)

[1] Within the range of 7.5 to 10.0 at all times.

(y) *Degreasing spent solvents—Subpart E—BPT*. There shall be no discharge of process wastewater pollutants.

[50 FR 34270, Aug. 23, 1985; 51 FR 2886, Jan. 22, 1986]

§ 471.52 Effluent limitations representating the degree of effluent reduction attainable by the application of the best available technology economically achievable (BAT).

Except as provided in 40 CFR 125.30 through 125.32, any existing point source subject to this subpart must achieve the following effluent limitations representing the degree of effluent reduction attainable by the application of the best available technology economically achievable (BAT):

(a) *Rolling spent neat oils and graphite based lubricants—Subpart E—BAT*. There shall be no discharge of process wastewater pollutants.

(b) *Rolling spent emulsions*.

SUBPART E–BAT

Pollutant or pollutant property	Maximum for any 1 day	Maximum for monthly average
	mg/off-kg (pounds per million off-pounds) of refractory metals rolled with emulsions	
Copper	0.549	0.262
Nickel	0.236	0.157
Fluoride	25.5	11.3
Molybdenum	2.16	0.957

(c) *Drawing spent lubricants—Subpart E—BAT*. There shall be no discharge of process wastewater pollutants.

(d) *Extrusion spent lubricants—Subpart E—BAT*. There shall be no discharge of process wastewater pollutants.

(e) *Extrusion press hydraulic fluid leakage*.

SUBPART E—BAT

Pollutant or pollutant property	Maximum for any 1 day	Maximum for monthly average
	mg/off-kg (pounds per million off-pounds) of refractory metals extruded	
Copper	1.5	0.730
Nickel	0.650	0.440
Fluoride	71.000	31.0
Molybdenum	5.99	2.66

(f) *Forging spent lubricants—Subpart E—BAT*. There shall be no discharge of process wastewater pollutants.

(g) *Forging contact cooling water*.

SUBPART E—BAT

Pollutant or pollutant property	Maximum for any 1 day	Maximum for monthly average
	mg/off-kg (pounds per million off-pounds) of forged refractory metals cooled with water	
Copper	0.041	0.020
Nickel	0.018	0.012
Fluoride	1.92	0.853
Molybdenum	0.163	0.072

(h) *Equipment cleaning wastewater*.

SUBPART E—BAT

Pollutant or pollutant property	Maximum for any 1 day	Maximum for monthly average
	mg/off-kg (pounds per million off-pounds) of refractory metals formed	
Copper	0.174	0.083
Nickel	0.075	0.051
Fluoride	8.09	3.59
Molybdenum	0.684	0.303

(i) *Metal powder production wastewater*.

SUBPART E—BAT

Pollutant or pollutant property	Maximum for any 1 day	Maximum for monthly average
	mg/off-kg (pounds per million off-pounds) of refractory metals powder produced	
Copper	0.360	0.172
Nickel	0.155	0.104
Fluoride	16.7	7.42
Molybdenum	1.42	0.627

(j) *Metal powder production floor wash wastewater—Subpart E—BAT.* There shall be no discharge of process wastewater pollutants.

(k) *Metal powder pressing spent lubricants—Subpart E—BAT.* There shall be no discharge of process wastewater pollutants.

(l) *Surface treatment spent baths.*

SUBPART E—BAT

Pollutant or pollutant property	Maximum for any 1 day	Maximum for monthly average
	mg/off-kg (pounds per million off-pounds) of refractory metals surface treated	
Copper	0.498	0.237
Nickel	0.214	0.144
Fluoride	23.2	10.3
Molybdenum	1.96	0.868

(m) *Surface treatment rinse.*

SUBPART E—BAT

Pollutant or pollutant property	Maximum for any 1 day	Maximum for monthly average
	mg/off-kg (pounds per million off-pounds) of refractory metals surface treated	
Copper	15.5	7.38
Nickel	6.66	4.48
Fluoride	720	320
Molybdenum	60.9	27.0

(n) *Alkaline cleaning spent baths.*

SUBPART E—BAT

Pollutant or pollutant property	Maximum for any 1 day	Maximum for monthly average
	mg/off-kg (pounds per million off-pounds) of refractory metals alkaline cleaned	
Copper	0.428	0.204
Nickel	0.184	0.124
Fluoride	19.9	8.82
Molybdenum	1.68	0.745

(o) *Alkaline cleaning rinse.*

SUBPART E—BAT

Pollutant or pollutant property	Maximum for any 1 day	Maximum for monthly average
	mg/off-kg (pounds per million off-pounds) of refractory metals alkaline cleaned	
Copper	10.5	4.98
Nickel	4.49	3.02
Fluoride	486	216
Molybdenum	41.1	18.2

(p) *Molten salt rinse.*

SUBPART E—BAT

Pollutant or pollutant property	Maximum for any 1 day	Maximum for monthly average
	mg/off-kg (pounds per million off-pounds) of refractory metals treated with molten salt	
Copper	0.810	0.386
Nickel	0.348	0.234
Fluoride	37.7	16.7
Molybdenum	3.19	1.41

(q) *Tumbling or burnishing wastewater.*

SUBPART E—BAT

Pollutant or pollutant property	Maximum for any 1 day	Maximum for monthly average
	mg/off-kg (pounds per million off-pounds) of refractory metals tumbled or burnished	
Copper	1.60	0.763
Nickel	0.688	0.463
Fluoride	74.4	33.0
Molybdenum	6.29	2.79

(r) *Sawing or grinding spent neat oils—Subpart E—BAT.* There shall be no discharge of process wastewater pollutants.

(s) *Sawing or grinding spent emulsions.*

SUBPART E—BAT

Pollutant or pollutant property	Maximum for any 1 day	Maximum for monthly average
	mg/off-kg (pounds per million off-pounds) of refractory metals sawed or ground with emulsions	
Copper	0.380	0.181
Nickel	0.164	0.110
Fluoride	17.7	7.84
Molybdenum	1.50	0.663

(t) *Sawing or grinding contact cooling water.*

SUBPART E—BAT

Pollutant or pollutant property	Maximum for any 1 day	Maximum for monthly average
	mg/off-kg (pounds per million off-pounds) of refractory metals sawed or ground with contact cooling water	
Copper	3.11	1.48
Nickel	1.34	0.899
Fluoride	145.0	64.2
Molybdenum	12.2	5.42

(u) *Sawing or grinding rinse.*

SUBPART E—BAT

Pollutant or pollutant property	Maximum for any 1 day	Maximum for monthly average
	mg/off-kg (pounds per million off-pounds) of sawed or ground refractory metals rinsed	
Copper	0.018	0.009
Nickel	0.008	0.005
Fluoride	0.803	0.357
Molybdenum	0.068	0.030

(v) *Wet air pollution control scrubber blowdown.*

SUBPART E—BAT

Pollutant or pollutant property	Maximum for any 1 day	Maximum for monthly average
	mg/off-kg (pounds per million off-pounds) of refractory metals sawed, surface coated or surface treated	
Copper	1.01	0.480
Nickel	0.433	0.291
Fluoride	46.8	20.8
Molybdenum	3.96	1.76

(w) *Miscellaneous wastewater sources.*

SUBPART E—BAT

Pollutant or pollutant property	Maximum for any 1 day	Maximum for monthly average
	mg/off-kg (pounds per million off-pounds) of refractory metals formed	
Copper	0.442	0.211
Nickel	0.190	0.128
Fluoride	20.6	9.11
Molybdenum	1.74	0.770

(x) *Dye penetrant testing wastewater.*

SUBPART E—BAT

Pollutant or pollutant property	Maximum for any 1 day	Maximum for monthly average
	mg/off-kg (pounds per million off-pounds) of refractory metals product tested	
Copper	0.100	0.048
Nickel	0.043	0.029
Fluoride	4.62	2.05
Molybdenum	0.391	0.173

(y) *Degreasing spent solvents—Subpart E—BAT.* There shall be no discharge of process wastewater pollutants.

[50 FR 34270, Aug. 23, 1985; 51 FR 2886, Jan. 22, 1986]

§ 471.53 New source performance standards (NSPS).

Any new source subject to this subpart must achieve the following new source performance standards (NSPS):

(a) *Rolling spent neat oils and graphite based lubricants—Subpart E—NSPS.* There shall be no discharge of process wastewater pollutants.

(b) *Rolling spent emulsions.*

SUBPART E—NSPS

Pollutant or pollutant property	Maximum for any 1 day	Maximum for monthly average
	mg/off-kg (pounds per million off-pounds) of refractory metals rolled with emulsions	
Copper	0.549	0.262
Nickel	0.236	0.159
Fluoride	25.5	11.3
Molybdenum	2.16	0.957
Oil and grease	4.29	4.29
TSS	6.44	5.15
pH	(1)	(1)

[1] Within the range of 7.5 to 10.0 at all times.

(c) *Drawing spent lubricants.—Subpart E—NSPS.* There shall be no discharge of process wastewater pollutants.

(d) *Extrusion spent lubricants.—Subpart E—NSPS.* There shall be no discharge of process wastewater pollutants.

(e) *Extrusion press hydraulic fluid leakage.*

SUBPART E—NSPS

Pollutant or pollutant property	Maximum for any 1 day	Maximum for monthly average
	mg/off-kg (pounds per million off-pounds) of refractory metals extruded	
Copper	1.53	0.726
Nickel	0.655	0.441
Fluoride	70.8	31.4
Molybdenum	5.99	2.66
Oil and grease	11.9	11.9
TSS	17.9	14.3
pH	(1)	(1)

[1] Within the range of 7.5 to 10.0 at all times.

(f) *Forging spent lubricants—Subpart E—NSPS.* There shall be no discharge of process wastewater pollutants.

(g) *Forging contact cooling water.*

SUBPART E—NSPS

Pollutant or pollutant property	Maximum for any 1 day	Maximum for monthly average
	mg/off-kg (pounds per million off-pounds) of forged refractory metals cooled with water	
Copper	0.041	0.020
Nickel	0.018	0.012
Fluoride	1.92	0.853
Molybdenum	0.163	0.072
Oil and grease	0.323	0.323
TSS	0.485	0.388
pH	(1)	(1)

[1] Within the range of 7.5 to 10.0 at all times.

(h) *Equipment cleaning wastewater.*

SUBPART E—NSPS

Pollutant or pollutant property	Maximum for any 1 day	Maximum for monthly average
	mg/off-kg (pounds per million off-pounds) of refractory metals formed	
Copper	0.174	0.083
Nickel	0.075	0.051
Fluoride	8.09	3.59
Molybdenum	0.684	0.303
Oil and grease	1.36	1.36
TSS	2.04	1.63
pH	(1)	(1)

[1] Within the range of 7.5 to 10.0 at all times.

(i) *Metal powder production wastewater.*

SUBPART E—NSPS

Pollutant or pollutant property	Maximum for any 1 day	Maximum for monthly average
	mg/off-kg (pounds per million off-pounds) of refractory metals powder produced	
Copper	0.360	0.172
Nickel	0.155	0.104
Fluoride	16.7	7.42
Molybdenum	1.42	0.627
Oil and grease	2.81	2.81
TSS	4.22	3.37
pH	(1)	(1)

[1] Within the range of 7.5 to 10.0 at all times.

(j) *Metal powder production floor wash wastewater—Subpart E—NSPS.* There shall be no discharge of process wastewater pollutants.

(k) *Metal powder pressing spent lubricants—Subpart E—NSPS.* There shall be no discharge of process wastewater pollutants.

(l) *Surface treatment spent baths.*

SUBPART E—NSPS

Pollutant or pollutant property	Maximum for any 1 day	Maximum for monthly average
	mg/off-kg (pounds per million off-pounds) of refractory metals surface treated	
Copper	0.498	0.237
Nickel	0.214	0.144
Fluoride	23.2	10.3
Molybdenum	1.96	0.868
Oil and grease	3.89	3.89
TSS	5.84	4.67
pH	(1)	(1)

1 Within the range of 7.5 to 10.0 at all times.

(m) *Surface treatment rinse.*

SUBPART E—NSPS

Pollutant or pollutant property	Maximum for any 1 day	Maximum for monthly average
	mg/off-kg (pounds per million off-pounds) of refractory metals surface treated	
Copper	15.5	7.38
Nickel	6.66	4.48
Fluoride	720	320
Molybdenum	69.9	27.0
Oil and grease	121	121
TSS	182	145
pH	(1)	(1)

1 Within the range of 7.5 to 10.0 at all times.

(n) *Alkaline cleaning spent baths.*

SUBPART E—NSPS

Pollutant or pollutant property	Maximum for any 1 day	Maximum for monthly average
	mg/off-kg (pounds per million off-pounds) of refractory metals alkaline cleaned	
Copper	0.428	0.204
Nickel	.184	0.124
Fluoride	19.9	8.82
Molybdenum	1.68	0.745
Oil and grease	3.34	3.34
TSS	5.01	4.01
pH	(1)	(1)

1 Within the range of 7.5 to 10.0 at all times.

(o) *Alkaline cleaning rinse.*

SUBPART E—NSPS

Pollutant or pollutant property	Maximum for any 1 day	Maximum for monthly average
	mg/off-kg (pounds per million off-pounds) of refractory metals alkaline cleaned	
Copper	10.5	4.98
Nickel	4.49	3.02
Fluoride	486	216
Molybdenum	41.1	18.2
Oil and grease	81.6	81.6
TSS	123	97.9
pH	(1)	(1)

1 Within the range of 7.5 to 10.0 at all times.

(p) *Molten salt rinse.*

SUBPART E—NSPS

Pollutant or pollutant property	Maximum for any 1 day	Maximum for monthly average
	mg/off-kg (pounds per million off-pounds) of refractory metals treated with molten salt	
Copper	0.810	0.386
Nickel	0.348	0.234
Fluoride	37.7	16.7
Molybdenum	3.19	1.41
Oil and grease	6.33	6.33
TSS	9.5	7.6
pH	(1)	(1)

1 Within the range of 7.5 to 10.0 at all times.

(q) *Tumbling or burnishing wastewater.*

SUBPART E—NSPS

Pollutant or pollutant property	Maximum for any 1 day	Maximum for monthly average
	mg/off-kg (pounds per million off-pounds) of refractory metals tumbled or burnished	
Copper	1.60	0.763
Nickel	0.688	0.463
Fluoride	74.4	33.0
Molybdenum	6.29	2.79
Oil and grease	12.5	12.5
TSS	18.8	15.0
pH	(1)	(1)

1 Within the range of 7.5 to 10.0 at all times.

(r) *Sawing or grinding spent neat oils—Subpart E—NSPS.* There shall be no discharge of process wastewater pollutants.

(s) *Sawing or grinding spent emulsions.*

SUBPART E—NSPS

Pollutant or pollutant property	Maximum for any 1 day	Maximum for monthly average
	mg/off-kg (pounds per million off-pounds) of refractory metals sawed or ground with emulsions	
Copper	0.380	0.181
Nickel	0.164	0.110
Fluoride	17.7	7.84
Molybdenum	1.5	0.663
Oil and grease	2.97	2.97
TSS	4.46	3.57
pH	(1)	(1)

1 Within the range of 7.5 to 10.0 at all times.

(t) *Sawing or grinding contact cooling water.*

SUBPART E—NSPS

Pollutant or pollutant property	Maximum for any 1 day	Maximum for monthly average
	mg/off-kg (pounds per million off-pounds) of refractory metals sawed or ground with contact cooling water	
Copper	3.11	1.48
Nickel	1.34	0.899
Fluoride	145	64.2
Molybdenum	12.2	5.42
Oil and grease	24.3	24.3
TSS	36.5	29.2
pH	(1)	(1)

1 Within the range of 7.5 to 10.0 at all times.

(u) *Sawing or grinding rinse.*

SUBPART E—NSPS

Pollutant or pollutant property	Maximum for any 1 day	Maximum for monthly average
	mg/off-kg (pounds per million off-pounds) of sawed or ground refractory metals rinsed	
Copper	0.018	0.009
Nickel	0.008	0.005
Fluoride	0.803	0.357
Molybdenum	0.068	0.030
Oil and grease	0.135	0.135
TSS	0.203	0.162
pH	(1)	(1)

1 Within the range of 7.5 to 10.0 at all times.

(v) *Wet air pollution control scrubber blowdown.*

SUBPART E—NSPS

Pollutant or pollutant property	Maximum for any 1 day	Maximum for monthly average
	mg/off-kg (pounds per million off-pounds) of refractory metals sawed, ground, surface coated or surface treated	
Copper	1.01	0.480
Nickel	0.433	0.291
Fluoride	46.8	20.8
Molybdenum	3.96	1.76
Oil and grease	7.87	7.87
TSS	11.8	9.45
pH	(1)	(1)

1 Within the range of 7.5 to 10.0 at all times.

(w) *Miscellaneous wastewater sources.*

SUBPART E—NSPS

Pollutant or pollutant property	Maximum for any 1 day	Maximum for monthly average
	mg/off-kg (pounds per million off-pounds) of refractory metals formed	
Copper	0.442	0.211
Nickel	0.190	0.128
Fluoride	20.6	9.11
Molybdenum	1.74	0.770
Oil and grease	3.45	3.45
TSS	5.18	4.14
pH	(1)	(1)

1 Within the range of 7.5 to 10.0 at all times.

(x) *Dye penetrant testing wastewater.*

SUBPART E—NSPS

Pollutant or pollutant property	Maximum for any 1 day	Maximum for monthly average
	mg/off-kg (pounds per million off-pounds) of refractory metals product tested	
Copper	0.100	0.048
Nickel	0.043	0.029
Fluoride	4.62	2.05
Molybdenum	0.391	0.173
Oil and grease	0.776	0.776
TSS	1.17	0.931
pH	(1)	(1)

1 Within the range of 7.5 to 10.0 at all times.

(y) *Degreasing spent solvents—Subpart E—NSPS.* There shall be no discharge of process wastewater pollutants.

[50 FR 34270, Aug. 23, 1985; 51 FR 2886, Jan. 22, 1986]

§ 471.54 Pretreatment standards for existing sources (PSES).

Except as provided in 40 CFR 403.7 and 403.13, any existing source subject to this subpart which introduces pollutants into a publicly owned treatment works must comply with 40 CFR part 403 and by August 23, 1988 achieve the following pretreatment standards for existing sources (PSES). The mass of wastewater pollutants in refractory metals forming process wastewater introduced into a POTW shall not exceed the following values:

(a) *Rolling spent neat oils and graphite based lubricants—Subpart E—PSES.* There shall be no discharge of process wastewater pollutants.

(b) *Rolling spent emulsions.*

SUBPART E—PSES

Pollutant or pollutant property	Maximum for any 1 day	Maximum for monthly average
	mg/off-kg (pounds per million off-pounds) of refractory metals rolled with emulsions	
Copper	0.815	0.429
Nickel	0.824	0.545
Fluoride	25.5	11.4
Molybdenum	2.84	1.47

(c) *Drawing spent lubricants—Subpart E—PSES.* There shall be no discharge of process wastewater pollutants.

(d) *Extrusion spent lubricants—Subpart E—PSES.* There shall be no discharge of process wastewater pollutants.

(e) *Extrusion press hydraulic fluid leakage.*

SUBPART E—PSES

Pollutant or pollutant property	Maximum for any 1 day	Maximum for monthly average
	mg/off-kg (pounds per million off-pounds) of refractory metals extruded	
Copper	2.26	1.19
Nickel	2.29	1.51
Fluoride	70.8	31.4
Molybdenum	7.87	4.07

(f) *Forging spent lubricants—Subpart E—PSES.* There shall be no discharge of process wastewater pollutants.

(g) *Forging contact cooling water.*

SUBPART E—PSES

Pollutant or pollutant property	Maximum for any 1 day	Maximum for monthly average
	mg/off-kg (pounds per million off-pounds) of forged refractory metals cooled with water	
Copper	0.062	0.033
Nickel	0.062	0.041
Fluoride	1.92	0.853
Molybdenum	0.214	0.111

(h) *Equipment cleaning wastewater.*

SUBPART E—PSES

Pollutant or pollutant property	Maximum for any 1 day	Maximum for monthly average
	mg/off-kg (pounds per million off-pounds) of refractory metals formed	
Copper	0.259	0.136
Nickel	0.261	0.173
Fluoride	8.09	3.59
Molybdenum	0.899	0.465

(i) *Metal powder production wastewater.*

SUBPART E—PSES

Pollutant or pollutant property	Maximum for any 1 day	Maximum for monthly average
	mg/off-kg (pounds per million off-pounds) of refractory metals powder produced	
Copper	0.534	0.281
Nickel	0.540	0.357
Fluoride	16.7	7.42
Molybdenum	1.86	0.961

(j) *Metal powder production floor wash wastewater—Subpart E—PSES.* There shall be no discharge of process wastewater pollutants.

(k) *Metal powder pressing spent lubricants—Subpart E—PSES.* There shall be no discharge of process wastewater pollutants.

(l) *Surface treatment spent baths.*

SUBPART E—PSES

Pollutant or pollutant property	Maximum for any 1 day	Maximum for monthly average
	mg/off-kg (pounds per million off-pounds) of refractory metals surface treated	
Copper	0.739	0.389
Nickel	0.747	0.494
Fluoride	23.2	10.3
Molybdenum	2.57	1.33

(m) *Surface treatment rinse.*

SUBPART E—PSES

Pollutant or pollutant property	Maximum for any 1 day	Maximum for monthly average
	mg/off-kg (pounds per million off-pounds) of refractory metals surface treated	
Copper	23.0	12.1
Nickel	23.3	15.4
Fluoride	720	320
Molybdenum	80.0	41.4

(n) *Alkaline cleaning spent baths.*

SUBPART E—PSES

Pollutant or pollutant property	Maximum for any 1 day	Maximum for monthly average
	mg/off-kg (pounds per million off-pounds) of refractory metals alkaline cleaned	
Copper	0.635	0.334
Nickel	0.642	0.424
Fluoride	19.9	8.82
Molybdenum	2.21	1.14

(o) *Alkaline cleaning rinse.*

SUBPART E—PSES

Pollutant or pollutant property	Maximum for any 1 day	Maximum for monthly average
	mg/off-kg (pounds per million off-pounds) of refractory metals alkaline cleaned	
Copper	15.5	8.16
Nickel	15.7	10.4
Fluoride	486.	216.0
Molybdenum	54.0	27.9

(p) *Molten salt rinse.*

SUBPART E—PSES

Pollutant or pollutant property	Maximum for any 1 day	Maximum for monthly average
	mg/off-kg (pounds per million off-pounds) of refractory metals treated with molten salt	
Copper	1.20	0.633
Nickel	1.22	0.804
Fluoride	37.7	16.7
Molybdenum	4.19	2.17

(q) *Tumbling or burnishing wastewater.*

SUBPART E—PSES

Pollutant or pollutant property	Maximum for any 1 day	Maximum for monthly average
	mg/off-kg (pounds per million off-pounds) of refractory metals tumbled or burnished	
Copper	2.38	1.25
Nickel	2.40	1.59
Fluoride	74.4	33.0
Molybdenum	8.27	4.28

(r) *Sawing or grinding spent neat oils—Subpart E—PSES.* There shall be no discharge of process wastewater pollutants.

(s) *Sawing or grinding spent emulsions.*

SUBPART E—PSES

Pollutant or pollutant property	Maximum for any 1 day	Maximum for monthly average
	mg/off-kg (pounds per million off-pounds) of refractory metals sawed or ground with emulsions	
Copper	0.565	0.297
Nickel	0.570	0.377
Fluoride	17.7	7.84
Molybdenum	1.97	1.02

(t) *Sawing or grinding contact cooling water.*

SUBPART E—PSES

Pollutant or pollutant property	Maximum for any 1 day	Maximum for monthly average
	mg/off-kg (pounds per million off-pounds) of refractory metals sawed or ground with contact cooling water	
Copper	4.62	2.43
Nickel	4.67	3.09
Fluoride	145.	64.2
Molybdenum	16.1	8.31

(u) *Sawing or grinding rinse.*

SUBPART E—PSES

Pollutant or pollutant property	Maximum for any 1 day	Maximum for monthly average
	mg/off-kg (pounds per million off-pounds) of sawed or ground refractory metals rinsed	
Copper	0.026	0.014
Nickel	0.026	0.017
Fluoride	0.804	0.357
Molybdenum	0.089	0.046

(v) *Wet air pollution control blowdown.*

SUBPART E—PSES

Pollutant or pollutant property	Maximum for any 1 day	Maximum for monthly average
	mg/off-kg (pounds per million off-pounds) of refractory metals sawed, surface coated or surface treated	
Copper	1.50	0.787
Nickel	1.51	1.00
Fluoride	46.9	20.8
Molybdenum	5.20	2.69

(w) *Miscellaneous wastewater sources.*

SUBPART E—PSES

Pollutant or pollutant property	Maximum for any 1 day	Maximum for monthly average
	mg/off-kg (pounds per million off-pounds) of refractory metals formed	
Copper	0.656	0.345
Nickel	0.663	0.438
Fluoride	20.6	9.11
Molybdenum	2.28	1.18

(x) *Dye penetrant testing wastewater.*

SUBPART E—PSES

Pollutant or pollutant property	Maximum for any 1 day	Maximum for monthly average
	mg/off-kg (pounds per million off-pounds) of refractory metals product tested	
Copper	0.148	0.078
Nickel	0.149	0.099
Fluoride	4.62	2.05
Molybdenum	0.513	0.266

(y) *Degreasing spent solvents—Subpart E—PSES.* There shall be no discharge of process wastewater pollutants.

[50 FR 34270, Aug. 23, 1985; 51 FR 2887, Jan. 22, 1986]

§ 471.55 Pretreatment standards for new sources (PSNS).

Except as provided in 40 CFR 403.7, any new source subject to this subpart which introduces pollutants into a publicly owned treatment works must comply with 40 CFR part 403 and achieve the following pretreatment standards for new sources (PSNS). The mass of wastewater pollutants in the refractory metals forming process wastewater shall not exceed the values set forth below:

(a) *Rolling spent neat oils and graphite based lubricants—Subpart E—PSNS.* There shall be no discharge of process wastewater pollutants.

(b) *Rolling spent emulsions.*

SUBPART E—PSNS

Pollutant or pollutant property	Maximum for any 1 day	Maximum for monthly average
	mg/off-kg (pounds per million off-pounds) of refractory metals rolled with emulsions	
Copper	0.549	0.262
Nickel	0.236	0.159
Fluoride	25.5	11.3
Molybdenum	2.16	0.957

(c) *Drawing spent lubricants—Subpart E—PSNS.* There shall be no discharge of process wastewater pollutants.

(d) *Extrusion spent lubricants—Subpart E—NSPS.* There shall be no discharge of process wastewater pollutants.

(e) *Extrusion press hydraulic fluid leakage.*

SUBPART E—PSNS

Pollutant or pollutant property	Maximum for any 1 day	Maximum for monthly average
	mg/off-kg (pounds per million off-pounds) of refractory metals extruded	
Copper	1.53	0.726
Nickel	0.655	0.441
Fluoride	70.8	31.4
Molybdenum	5.99	2.66

(f) *Forging spent lubricants—Subpart E—PSNS.* There shall be no discharge of process wastewater pollutants.

(g) *Forging contact cooling water.*

SUBPART E—PSNS

Pollutant or pollutant property	Maximum for any 1 day	Maximum for monthly average
	mg/off-kg (pounds per million off-pounds) of forged refractory metals cooled with water	
Copper	0.041	0.320
Nickel	0.018	0.021
Fluoride	1.92	0.853
Molybdenum	0.163	0.072

(h) *Equipment cleaning wastewater.*

SUBPART E—PSNS

Pollutant or pollutant property	Maximum for any 1 day	Maximum for monthly average
	mg/off-kg (pounds per million off-pounds) of refractory metals formed	
Copper	0.174	0.083
Nickel	0.075	0.051
Fluoride	8.09	3.59
Molybdenum	0.684	0.303

(i) *Metal powder production wastewater.*

SUBPART E—PSNS

Pollutant or pollutant property	Maximum for any 1 day	Maximum for monthly average
	mg/off-kg (pounds per million off-pounds) of refractory metals powder produced	
Copper	0.360	0.172
Nickel	0.155	0.104
Fluoride	16.7	7.42
Molybdenum	1.42	0.627

(j) *Metal powder production floor wash wastewater—Subpart E—PSNS.* There shall be no discharge of process wastewater pollutants.

(k) *Metal powder pressing spent lubricants—Subpart E—PSNS.* There shall be no discharge of process wastewater pollutants.

(l) *Surface treatment spent baths.*

SUBPART E—PSNS

Pollutant or pollutant property	Maximum for any 1 day	Maximum for monthly average
	mg/off-kg (pounds per million off-pounds) of refractory metals surface treated	
Copper	0.498	0.237
Nickel	0.214	0.144
Fluoride	23.2	10.3
Molybdenum	1.96	0.868

(m) *Surface treatment rinse.*

SUBPART E—PSNS

Pollutant or pollutant property	Maximum for any 1 day	Maximum for monthly average
	mg/off-kg (pounds per million off-pounds) of refractory metals surface treated	
Copper	15.5	7.38
Nickel	6.66	4.48
Fluoride	720	320
Molybdenum	60.9	27.0

(n) *Alkaline cleaning spent baths.*

SUBPART E—PSNS

Pollutant or pollutant property	Maximum for any 1 day	Maximum for monthly average
	mg/off-kg (pounds per million off-pounds) of refractory metals alkaline cleaned	
Copper	0.428	0.204
Nickel	0.184	0.124
Fluoride	19.9	8.82
Molybdenum	1.68	0.745

(o) *Alkaline cleaning rinse.*

SUBPART E—PSNS

Pollutant or pollutant property	Maximum for any 1 day	Maximum for monthly average
	mg/off-kg (pounds per million off-pounds) of refractory metals alkaline cleaned	
Copper	10.5	4.98
Nickel	4.49	3.02
Fluoride	48.6	216
Molybdenum	41.1	18.2

(p) *Molten salt rinse.*

SUBPART E—PSNS

Pollutant or pollutant property	Maximum for any 1 day	Maximum for monthly average
	mg/off-kg (pounds per million off-pounds) of refractory metals treated with molten salt	
Copper	0.810	0.386
Nickel	0.348	0.234
Fluoride	37.7	16.7
Molybdenum	3.19	1.41

(q) *Tumbling or burnishing wastewater.*

SUBPART E—PSNS

Pollutant or pollutant property	Maximum for any 1 day	Maximum for monthly average
	mg/off-kg (pounds per million off-pounds) of refractory metals tumbled or burnished	
Copper	1.60	0.763
Nickel	0.688	0.463
Fluoride	74.4	33.0
Molybdenum	6.29	2.79

(r) *Sawing or grinding spent neat oils—Subpart E—PSNS.* There shall be no discharge or process wastewater pollutants.

(s) *Sawing or grinding spent emulsions.*

SUBPART E—PSNS

Pollutant or pollutant property	Maximum for any 1 day	Maximum for monthly average
	mg/off-kg (pounds per million off-pounds) of refractory metals sawed or ground with emulsions	
Copper	0.380	0.181
Nickel	0.164	0.110
Fluoride	17.7	7.84
Molybdenum	1.50	0.663

(t) *Sawing or grinding contact cooling water.*

SUBPART E—PSNS

Pollutant or pollutant property	Maximum for any 1 day	Maximum for monthly average
	mg/off-kg (pounds per million off-pounds) of refractory metals sawed or ground with contact cooling water	
Copper	3.11	1.48
Nickel	1.34	0.899
Fluoride	145	64.2
Molybdenum	12.2	5.42

(u) *Sawing or grinding rinse.*

SUBPART E—PSNS

Pollutant or pollutant property	Maximum for any 1 day	Maximum for monthly average
	mg/off-kg (pounds per million off-pounds) of sawed or ground refractory metals rinsed	
Copper	0.018	0.009
Nickel	0.008	0.005
Fluoride	0.803	0.357
Molybdenum	0.068	0.030

(v) *Wet air pollution control blowdown.*

SUBPART E—PSNS

Pollutant or pollutant property	Maximum for any 1 day	Maximum for monthly average
	mg/off-kg (pounds per million off-pounds) of refractory metals sawed, ground, surface coated or surface treated	
Copper	1.01	0.480
Nickel	0.433	0.291
Fluoride	46.8	20.8
Molybdenum	3.96	1.76

(w) *Miscellaneous wastewater source.*

SUBPART E—PSNS

Pollutant or pollutant property	Maximum for any 1 day	Maximum for monthly average
	mg/off-kg (pounds per million off-pounds) of refractory metals formed	
Copper	0.442	0.211
Nickel	0.192	0.128
Fluoride	20.6	9.11
Molybdenum	1.74	0.770

(x) *Dye penetrant testing wastewater.*

SUBPART E—PSNS

Pollutant or pollutant property	Maximum for any 1 day	Maximum for monthly average
	mg/off-kg (pounds per million off-pounds) of refractory metals product tested	
Copper	0.100	0.048
Nickel	0.043	0.029
Fluoride	4.62	2.05
Molybdenum	0.391	0.173

(y) *Degreasing spend solvents—Subpart E—PSNS.* There shall be no discharge of process wastewater pollutants.

[50 FR 34270, Aug. 23, 1985; 51 FR 2887, Jan. 22, 1986]

§ 471.56 Effluent limitations representing the degree of effluent reduction attainable by the application of the best conventional pollutant control technology (BCT). [Reserved]

Subpart F—Titanium Forming Subcategory

§ 471.60 Applicability; description of the titanium forming subcategory.

This subpart applies to discharges of pollutants to waters of the United States, and introductions of pollutants into publicly owned treatment works from the process operations of the titanium forming subcategory.

§ 471.61 Effluent limitations representing the degree of effluent reduction attainable by the application of the best practicable control technology currently available (BPT).

Except as provided in 40 CFR 125.30 through 125.32, any existing point source subject to this subpart must achieve the following effluent limitations for the process operations representing the degree of effluent reduction attainable by the application of the best practicable control technology currently available (BPT):

(a) *Rolling spent neat oils.—Subpart F—BPT.* There shall be no discharge of process wastewater pollutants.

(b) *Rolling contact cooling water.*

SUBPART F—BPT

Pollutant or pollutant property	Maximum for any 1 day	Maximum for monthly average
	mg/off-kg (pounds per million off-pounds) of titanium rolled with contact cooling water	
Cyanide	1.4	0.586
Lead	2.05	0.976
Zinc	7.13	2.98
Ammonia	651	286
Fluoride	291	129
Oil and grease	97.0	58.0
TSS	200.0	95.0
pH	(1)	(1)

[1] Within the range of 7.5 to 10.0 at all times.

(c) *Drawing spent neat oils—Subpart F—BPT.* There shall be no discharge of process wastewater pollutants.

(d) *Extrusion spent neat oils—Subpart F—BPT.* There shall be no discharge of process wastewater pollutants.

(e) *Extrusion spent emulsions.*

SUBPART F—BPT

Pollutant or pollutant property	Maximum for any 1 day	Maximum for monthly average
	mg/off-kg (pounds per million off-pounds) of titanium extruded	
Cyanide	0.021	0.009
Lead	0.030	0.015
Zinc	0.105	0.044
Ammonia	9.59	4.22
Fluoride	4.28	1.9
Oil and grease	1.44	0.863
TSS	2.95	1.4
pH	(1)	(1)

[1] Within the range of 7.5 to 10.0 at all times.

(f) *Extrusion press hydraulic fluid leakage.*

SUBPART F—BPT

Pollutant or pollutant property	Maximum for any 1 day	Maximum for monthly average
	mg/off-kg (pounds per million off-pounds) of titanium extruded	
Cyanide	0.052	0.022
Lead	0.075	0.036
Zinc	0.260	0.109
Ammonia	23.7	10.5
Fluoride	10.6	4.70
Oil and grease	3.56	2.14
TSS	7.30	3.47
pH	(1)	(1)

[1] Within the range of 7.5 to 10.0 at all times.

(g) *Forging spent lubricants—Subpart F—BPT.* There shall be no discharge of process wastewater pollutants.

(h) *Forging contact cooling water.*

SUBPART F—BPT

Pollutant or pollutant property	Maximum for any 1 day	Maximum for monthly average
	mg/off-kg (pounds per million off-pounds) of forged titanium cooled with water	
Cyanide	0.580	0.240
Lead	0.840	0.400
Zinc	2.92	1.22
Ammonia	267	117
Fluoride	119	52.8
Oil and grease	40.0	24.0
TSS	82.0	39.0
pH	(1)	(1)

1 Within the range of 7.5 to 10.0 at all times.

(i) *Forging equipment cleaning wastewater.*

SUBPART F—BPT

Pollutant or pollutant property	Maximum for any 1 day	Maximum for monthly average
	mg/off-kg (pounds per million off-pounds) of refractory metals forged	
Cyanide	0.012	0.005
Lead	0.017	0.008
Zinc	0.059	0.025
Ammonia	5.33	2.35
Fluoride	2.38	1.06
Oil and grease	0.800	0.480
TSS	1.64	0.780
pH	(1)	(1)

1 Within the range of 7.5 to 10.0 at all times.

(j) *Forging press hydraulic fluid leakage.*

SUBPART F—BPT

Pollutant or pollutant property	Maximum for any 1 day	Maximum for monthly average
	mg/off-kg (pounds per million off-pounds) of refractory metals forged	
Cyanide	0.293	0.121
Lead	0.424	0.202
Zinc	1.48	0.616
Ammonia	135	59.2
Fluoride	60.1	26.7
Oil and grease	20.2	12.1
TSS	41.4	19.7
pH	(1)	(1)

1 Within the range of 7.5 to 10.0 at all times.

(k) *Tube reducing spent lubricants—Subpart F—BPT.* There shall be no discharge of process wastewater pollutants.

(l) *Heat treatment contact cooling water—Subpart F—BPT.* There shall be no allowance for the discharge of process wastewater pollutants.

(m) *Surface treatment spent baths.*

SUBPART F—BPT

Pollutant or pollutant property	Maximum for any 1 day	Maximum for monthly average
	mg/off-kg (pounds per million off-pounds) of titanium surface treated	
Cyanide	0.061	0.025
Lead	0.088	0.042
Zinc	0.304	0.127
Ammonia	27.7	12.2
Fluoride	12.4	5.49
Oil and grease	4.16	2.50
TSS	8.53	4.06
pH	(1)	(1)

1 Within the range of 7.5 to 10.0 at all times.

(n) *Surface treatment rinse.*

SUBPART F—BPT

Pollutant or pollutant property	Maximum for any 1 day	Maximum for monthly average
	mg/off-kg (pounds per million off-pounds) of titanium surface treated	
Cyanide	8.47	3.51
Lead	12.3	5.84
Zinc	42.7	17.8
Ammonia	3,890	1,710
Fluoride	1,740	771
Oil and grease	584	351
TSS	1,200	570
pH	(1)	(1)

1 Within the range of 7.5 to 10.0 at all times.

(o) *Wet air pollution control scrubber blowdown.*

SUBPART F—BPT

Pollutant or pollutant property	Maximum for any 1 day	Maximum for monthly average
	mg/off-kg (pounds per million off-pounds) of titanium surface treated or forged	
Cyanide	0.621	0.257
Lead	0.899	0.428
Zinc	3.13	1.31
Ammonia	285	126
Fluoride	128	56.5
Oil and grease	42.8	25.7
TSS	87.8	41.8
pH	(1)	(1)

[1] Within the range of 7.5 to 10.0 at all times.

(p) *Alkaline cleaning spent baths.*

SUBPART F—BPT

Pollutant or pollutant property	Maximum for any 1 day	Maximum for monthly average
	mg/off-kg (pounds per million off-pounds) of titanium alkaline cleaned	
Cyanide	0.070	0.029
Lead	0.101	0.048
Zinc	0.351	0.147
Ammonia	32.0	14.1
Fluoride	14.3	6.34
Oil and grease	4.80	2.88
TSS	9.84	4.68
pH	(1)	(1)

[1] Within the range of 7.5 to 10.0 at all times.

(q) *Alkaline cleaning rinse.*

SUBPART F—BPT

Pollutant or pollutant property	Maximum for any 1 day	Maximum for monthly average
	mg/off-kg (pounds per million off-pounds) of titanium alkaline cleaned	
Cyanide	0.801	0.331
Lead	1.16	0.552
Zinc	4.03	1.69
Ammonia	370	160
Fluoride	164	72.9
Oil and grease	55.2	33.1
TSS	113	53.8
pH	(1)	(1)

[1] Within the range of 7.5 to 10.0 at all times.

(r) *Molten salt rinse.*

SUBPART F—BPT

Pollutant or pollutant property	Maximum for any 1 day	Maximum for monthly average
	mg/off-kg (pounds per million off-pounds) of titanium treated with molten salt	
Cyanide	0.277	0.115
Lead	0.401	0.191
Zinc	1.40	0.583
Ammonia	128	56.0
Fluoride	56.8	25.2
Oil and grease	19.1	11.5
TSS	39.2	18.6
pH	(1)	(1)

[1] Within the range of 7.5 to 10.0 at all times.

(s) *Tumbling wastewater.*

SUBPART F—BPT

Pollutant or pollutant property	Maximum for any 1 day	Maximum for monthly average
	mg/off-kg (pounds per million off-pounds) of titanium tumbled	
Cyanide	0.229	0.095
Lead	0.332	0.158
Zinc	1.16	0.482
Ammonia	110	46
Fluoride	47.0	20.9
Oil and grease	15.8	9.48
TSS	32.4	15.4
pH	(1)	(1)

[1] Within the range of 7.5 to 10.0 at all times.

(t) *Sawing or grinding spent neat oils—Subpart F—BPT.* There shall be no discharge of process wastewater pollutants.

(u) *Sawing or grinding of spent emulsions.*

SUBPART F—BPT

Pollutant or pollutant property	Maximum for any 1 day	Maximum for monthly average
	mg/off-kg (pounds per million off-pounds) of titanium sawed or ground with an emulsion	
Cyanide	0.053	0.022
Lead	0.077	0.037
Zinc	0.267	0.112
Ammonia	24.4	10.7
Fluoride	10.9	4.83
Oil and grease	3.66	2.20
TSS	7.51	3.57
pH	(1)	(1)

[1] Within the range of 7.5 to 10.0 at all times.

(v) *Sawing or grinding contact cooling water.*

SUBPART F—BPT

Pollutant or pollutant property	Maximum for any 1 day	Maximum for monthly average
	mg/off-kg (pounds per million off-pounds) of titanium sawed or ground with contact cooling water	
Cyanide	1.38	0.571
Lead	2.00	0.952
Zinc	6.95	2.91
Ammonia	635	279
Fluoride	283	126
Oil and grease	95.2	57.1
TSS	195	92.8
pH	(1)	(1)

[1] Within the range of 7.5 to 10.0 at all times.

(w) *Dye penetrant testing wastewater.*

SUBPART F—BPT

Pollutant or pollutant property	Maximum for any 1 day	Maximum for monthly average
	mg/off-kg (pounds per million off-pounds) of titanium tested with dye penetrant methods	
Cyanide	0.325	0.135
Lead	0.471	0.224
Zinc	1.64	0.683
Ammonia	149	65.7
Fluoride	66.7	29.6
Oil and grease	22.4	13.5
TSS	45.9	21.9
pH	(1)	(1)

[1] Within the range of 7.5 to 10.0 at all times.

(x) *Miscellaneous wastewater sources.*

SUBPART F—BPT

Pollutant or pollutant property	Maximum for any 1 day	Maximum for monthly average
	mg/off-kg (pounds per million off-pounds) of titanium formed	
Cyanide	0.010	0.004
Lead	0.014	0.007
Zinc	0.048	0.020
Ammonia	4.32	1.90
Fluoride	1.93	0.856
Oil and grease	0.648	0.389
TSS	1.33	0.632
pH	(1)	(1)

[1] Within the range of 7.5 to 10.0 at all times.

(y) *Degreasing spent solvents—Subpart F—BPT.* There shall be no discharge of process wastewater pollutants.

[50 FR 34270, Aug. 23, 1985; 51 FR 2887, Jan. 22, 1986]

§ 471.62 Effluent limitations representing the degree of effluent reduction attainable by the application of the best available technology economically achievable (BAT).

Except as provided in 40 CFR 125.30 through 125.32, any existing point source subject to this subpart must achieve the following effluent limitations representing the degree of effluent reduction attainable by the application of the best available technology economically achievable (BAT):

(a) *Rolling spent neat oils—Subpart F—BAT.* There shall be no discharge of process wastewater pollutants.

(b) *Rolling contact cooling water.*

SUBPART F—BAT

Pollutant or pollutant property	Maximum for any 1 day	Maximum for monthly average
	mg/off-kg (pounds per million off-pounds) of titanium rolled with contact cooling water	
Cyanide	0.142	0.059
Lead	0.205	0.098
Zinc	0.713	0.298
Ammonia	65.1	28.6
Fluoride	29.1	12.90

(c) *Drawing spent neat oils—Subpart F—BAT.* There shall be no discharge of process wastewater pollutants.

(d) *Extrusion spent neat oils—Subpart F—BAT.* There shall be no discharge of process wastewater pollutants.

(e) *Extrusion spent lubricants.*

SUBPART F—BAT

Pollutant or pollutant property	Maximum for any 1 day	Maximum for monthly average
	mg/off-kg (pounds per million off-pounds) of titanium extruded	
Cyanide	0.021	0.009
Lead	0.030	0.015
Zinc	0.105	0.044
Ammonia	9.59	4.22
Fluoride	4.28	1.90

(f) *Extrusion press hydraulic fluid leakage.*

SUBPART F—BAT

Pollutant or pollutant property	Maximum for any 1 day	Maximum for monthly average
	mg/off-kg (pounds per million off-pounds) of titanium extruded	
Cyanide	0.052	0.022
Lead	0.075	0.036
Zinc	0.260	0.109
Ammonia	23.7	10.5
Fluoride	10.6	4.70

(g) *Forging spent lubricants—Subpart F—BAT*. There shall be no discharge of process wastewater pollutants.

(h) *Forging contact cooling water*.

SUBPART F—BAT

Pollutant or pollutant property	Maximum for any 1 day	Maximum for monthly average
	mg/off-kg (pounds per million off-pounds) of forged titanium cooled with water	
Cyanide	0.029	0.012
Lead	0.042	0.020
Zinc	0.146	0.061
Ammonia	13.3	5.86
Fluoride	5.95	2.64

(i) *Forging equipment cleaning wastewater*.

SUBPART F—BAT

Pollutant or pollutant property	Maximum for any 1 day	Maximum for monthly average
	mg/off-kg (pounds per million off-pounds) of titanium forged cyanide	
Cyanide	0.012	0.005
Lead	0.017	0.008
Zinc	0.059	0.025
Ammonia	5.33	2.35
Fluoride	2.38	1.06

(j) *Forging press hydraulic fluid leakage*.

SUBPART F—BAT

Pollutant or pollutant property	Maximum for any 1 day	Maximum for monthly average
	mg/off-kg (pounds per million off-pounds) of titanium forged	
Cyanide	0.293	0.121
Lead	0.424	0.202
Zinc	1.48	0.616
Ammonia	135	59.2
Fluoride	60.1	26.7

(k) *Tube reducing spent lubricants—Subpart F—BAT*. There shall be no discharge of process wastewater pollutants.

(l) *Heat treatment contact cooling water—Subpart F—BAT*. There shall be no discharge allowance for process wastewater pollutants.

(m) *Surface treatment spent baths*.

SUBPART F—BAT

Pollutant or pollutant property	Maximum for any 1 day	Maximum for monthly average
	mg/off-kg (pounds per million off-pounds) of titanium surface treated	
Cyanide	0.061	0.025
Lead	0.088	0.042
Zinc	0.304	0.127
Ammonia	27.7	12.2
Fluoride	12.4	5.49

(n) *Surface treatment rinse*.

SUBPART F—BAT

Pollutant or pollutant property	Maximum for any 1 day	Maximum for monthly average
	mg/off-kg (pounds per million off-pounds) of titanium surface treated	
Cyanide	0.847	0.351
Lead	1.23	0.584
Zinc	4.27	1.78
Ammonia	389	171
Fluoride	174	77.1

(o) *Wet air pollutant control scrubber blowdown*.

SUBPART F—BAT

Pollutant or pollutant property	Maximum for any 1 day	Maximum for monthly average
	mg/off-kg (pounds per million off-pounds) of titanium surface treated or forged	
Cyanide	0.062	0.026
Lead	0.090	0.043
Zinc	0.313	0.131
Ammonia	28.5	12.6
Fluoride	12.8	5.68

(p) *Alkaline cleaning spent baths.*

SUBPART F—BAT

Pollutant or pollutant property	Maximum for any 1 day	Maximum for monthly average
	mg/off-kg (pounds per million off-pounds) of titanium alkaline cleaned	
Cyanide	0.070	0.029
Lead	0.101	0.048
Zinc	0.351	0.147
Ammonia	32	14.1
Fluoride	14.3	6.34

(q) *Akaline cleaning rinse.*

SUBPART F—BAT

Pollutant or pollutant property	Maximum for any 1 day	Maximum for monthly average
	mg/off-kg (pounds per million off-pounds) of titanium alkaline cleaned	
Cyanide	0.080	0.033
Lead	0.116	0.055
Zinc	0.403	0.169
Ammonia	36.8	16.2
Fluoride	16.4	7.29

(r) *Molten salt rinse.*

SUBPART F—BAT

Pollutant or pollutant property	Maximum for any 1 day	Maximum for monthly average
	mg/off-kg (pounds per million off-pounds) of titanium treated with molten salt	
Cyanide	0.277	0.115
Lead	0.401	0.191
Zinc	1.40	0.583
Ammonia	128	56
Fluoride	56.8	25.2

(s) *Tumbling wastewater.*

SUBPART F—BAT

Pollutant or pollutant property	Maximum for any 1 day	Maximum for monthly average
	mg/off-kg (pounds per million off-pounds) of titanium tumbled	
Cyanide	0.022	0.010
Lead	0.033	0.016
Zinc	0.116	0.048
Ammonia	11.0	4.60
Fluoride	4.70	2.09

(t) *Sawing or grinding spent neat oils—Subpart F—BAT.* There shall be no discharge of process wastewater pollutants.

(u) *Sawing or grinding spent emulsions.*

SUBPART F—BAT

Pollutant or pollutant property	Maximum for any 1 day	Maximum for monthly average
	mg/off-kg (pounds per million off-pounds) of titanium sawed or ground with emulsions	
Cyanide	0.053	0.022
Lead	0.077	0.037
Zinc	0.267	0.112
Ammonia	24.4	10.7
Fluoride	10.9	4.83

(v) *Sawing or grinding contact cooling water.*

SUBPART F—BAT

Pollutant or pollutant property	Maximum for any 1 day	Maximum for monthly average
	mg/off-kg (pounds per million off-pounds) to titanium sawed or ground with contact cooling water	
Cyanide	0.138	0.057
Lead	0.200	0.095
Zinc	0.695	0.291
Ammonia	63.5	27.9
Fluoride	28.3	12.6

(w) *Dye penetrant testing wastewater.*

SUBPART F—BAT

Pollutant or pollutant property	Maximum for any 1 day	Maximum for monthly average
	mg/off-kg (pounds per million off-pounds) of titanium tested with dye penetrant methods	
Cyanide	0.325	0.135
Lead	0.471	0.224
Zinc	1.64	0.683
Ammonia	149	65.7
Fluoride	66.7	29.6

(x) *Miscellaneous wastewater sources.*

SUBPART F—BAT

Pollutant or pollutant property	Maximum for any 1 day	Maximum for monthly average
	mg/off-kg (pounds per million off-pounds) of titanium formed	
Cyanide	0.010	0.004
Lead	0.014	0.007
Zinc	0.048	0.020
Ammonia	4.32	1.90
Fluoride	1.93	0.856

(y) *Degreasing spent solvents—Subpart F—BAT.* There shall be no discharge of process wastewater pollutants.

[50 FR 34270, Aug. 23, 1985; 51 FR 2887, Jan. 22, 1986]

§ 471.63 New source performance standards (NSPS).

Any new source subject to this subpart must achieve the following new source performance standards (NSPS). The discharge of wastewater pollutants from titanium process wastewater shall not exceed the values set forth below:

(a) *Rolling spent neat oils—Subpart F—NSPS.* There shall be no discharge of process wastewater pollutants.

(b) *Rolling contact cooling water.*

SUBPART F—NSPS

Pollutant or pollutant property	Maximum for any 1 day	Maximum for monthly average
	mg/off-kg (pounds per million off-pounds) of titanium rolled with contact cooling water	
Cyanide	0.142	0.059
Lead	0.205	0.098
Zinc	0.713	0.298
Ammonia	65.1	28.6
Fluoride	29.1	12.9
Oil and grease	9.76	5.86
TSS	20.0	9.52
pH	(1)	(1)

[1] Within the range of 7.5 to 10.0 at all times.

(c) *Drawing spent neat oils—Subpart F—NSPS.* There shall be no discharge of process wastewater pollutants.

(d) *Extrusion spent neat oils—Subpart F—NSPS.* There shall be no discharge of process wastewater pollutants.

(e) *Extrusion spent emulsions.*

SUBPART F—NSPS

Pollutant or pollutant property	Maximum for any 1 day	Maximum for monthly average
	mg/off-kg (pounds per million off-pounds) of titanium extruded	
Cyanide	0.021	0.009
Lead	0.030	0.015
Zinc	0.105	0.044
Ammonia	9.59	4.22
Fluoride	4.28	1.9
Oil and grease	1.44	0.863
TSS	2.95	1.40
pH	(1)	(1)

[1] Within the range of 7.5 to 10.0 at all times.

(f) *Extrusion press hydraulic fluid leakage.*

SUBPART F—NSPS

Pollutant or pollutant property	Maximum for any 1 day	Maximum for monthly average
	mg/off-kg (pounds per million off-pounds) of titanium extruded	
Cyanide	0.052	0.022
Lead	0.075	0.036
Zinc	0.260	0.109
Ammonia	23.7	10.5
Fluoride	10.6	4.70
Oil and grease	3.56	2.14
TSS	7.30	3.47
pH	(1)	(1)

[1] Within the range of 7.5 to 10.0 at all times.

(g) *Forging spent lubricants—Subpart F—NSPS.* There shall be no discharge of process wastewater pollutants.

(h) *Forging contact cooling water.*

SUBPART F—NSPS

Pollutant or pollutant property	Maximum for any 1 day	Maximum for monthly average
	mg/off-kg (pounds per million off-pounds) of forged titanium cooled with water	
Cyanide	0.029	0.012
Lead	0.0420	0.020
Zinc	0.146	0.061
Ammonia	13.3	5.86
Fluoride	5.95	2.64
Oil and grease	2.00	1.20
TSS	4.10	1.95
pH	(1)	(1)

[1] Within the range of 7.5 to 10.0 at all times.

(i) *Forging equipment cleaning wastewater.*

SUBPART F—NSPS

Pollutant or pollutant property	Maximum for any 1 day	Maximum for monthly average
	mg/off-kg (pounds per million off-pounds) of titanium forged	
Cyanide	0.012	0.005
Lead	0.017	0.008
Zinc	0.059	0.025
Ammonia	5.33	2.35
Fluoride	2.38	1.06
Oil and grease	0.800	0.490
TSS	1.64	0.780
pH	(1)	(1)

[1] Within the range of 7.5 to 10.0 at all times.

(j) *Forging press hydraulic fluid leakage.*

SUBPART F—NSPS

Pollutant or pollutant property	Maximum for any 1 day	Maximum for monthly average
	mg/off-kg (pounds per million off-pounds) of titanium forged	
Cyanide	0.293	0.121
Lead	0.424	0.202
Zinc	1.48	0.616
Ammonia	135	59.2
Fluoride	60.1	26.7
Oil and grease	20.2	12.1
TSS	41.4	19.7
pH	(1)	(1)

[1] Within the range of 7.5 to 10.0 at all times.

(k) *Tube reducing spent lubricants—Subpart F—NSPS.* There shall be no discharge of process wastewater pollutants.

(l) *Heat treatment contact cooling water—Subpart F—NSPS.* There shall be no discharge allowance for the discharge of process wastewater pollutants.

(m) *Surface treatment spent baths.*

SUBPART F—NSPS

Pollutant or pollutant property	Maximum for any 1 day	Maximum for monthly average
	mg/off-kg (pounds per million off-pounds) of titanium surface treated	
Cyanide	0.061	0.025
Lead	0.088	0.042
Zinc	0.304	0.127
Ammonia	27.7	12.2
Fluoride	12.4	5.49
Oil and grease	4.16	2.50
TSS	8.53	4.06
pH	(1)	(1)

[1] Within the range of 7.5 to 10.0 at all times.

(n) *Surface treatment rinse.*

SUBPART F—NSPS

Pollutant or pollutant property	Maximum for any 1 day	Maximum for monthly average
	mg/off-kg (pounds per million off-pounds) of titanium surface treated	
Cyanide	0.847	0.351
Lead	1.23	0.584
Zinc	4.27	1.78
Ammonia	389	171
Fluoride	174	77.1
Oil and grease	58.4	35.1
TSS	120	57.0
pH	(1)	(1)

[1] Within the range of 7.5 to 10.0 at all times.

(o) *Wet air pollution control scrubber blowdown.*

SUBPART F—NSPS

Pollutant or pollutant property	Maximum for any 1 day	Maximum for monthly average
	mg/off-kg (pounds per million off-pounds) of titanium surface treated or forged	
Cyanide	0.062	0.026
Lead	0.090	0.043
Zinc	0.313	0.131
Ammonia	28.5	12.6
Fluoride	12.8	5.65
Oil and grease	4.28	2.57
TSS	8.78	4.18
pH	(1)	(1)

[1] Within the range of 7.5 to 10.0 at all times.

(p) *Alkaline cleaning spent baths.*

SUBPART F—NSPS

Pollutant or pollutant property	Maximum for any 1 day	Maximum for monthly average
	mg/off-kg (pounds per million off-pounds) of titanium alkaline cleaned	
Cyanide	0.070	0.030
Lead	0.101	0.048
Zinc	0.351	0.147
Ammonia	32.0	14.1
Fluoride	14.3	6.34
Oil and grease	4.80	2.88
TSS	9.84	4.68
pH	(1)	(1)

[1] Within the range of 7.5 to 10.0 at all times.

(q) *Alkaline cleaning rinse.*

SUBPART F—NSPS

Pollutant or pollutant property	Maximum for any 1 day	Maximum for monthly average
	mg/off-kg (pounds per million off-pounds) of titanium alkaline cleaned	
Cyanide	0.080	0.033
Lead	0.116	0.055
Zinc	0.403	0.169
Ammonia	36.8	16.2
Fluoride	16.4	7.29
Oil and grease	5.52	3.31
TSS	11.3	5.38
pH	(1)	(1)

[1] Within the range of 7.5 to 10.0 at all times.

(r) *Molten salt rinse.*

SUBPART F—NSPS

Pollutant or pollutant property	Maximum for any 1 day	Maximum for monthly average
	mg/off-kg (pounds per million off-pounds) of titanium treated with molten salt	
Cyanide	0.277	0.115
Lead	0.401	0.191
Zinc	1.40	0.583
Ammonia	128	56.0
Fluoride	56.8	25.2
Oil and grease	19.1	11.5
TSS	39.2	18.6
pH	(1)	(1)

[1] Within the range of 7.5 to 10.0 at all times.

(s) *Tumbling wastewater.*

SUBPART F—NSPS

Pollutant or pollutant property	Maximum for any 1 day	Maximum for monthly average
	mg/off-kg (pounds per million off-pounds) of titanium tumbled	
Cyanide	0.023	0.010
Lead	0.033	0.016
Zinc	0.116	0.048
Ammonia	10.6	4.63
Fluoride	4.70	2.09
Oil and grease	1.58	0.948
TSS	3.24	1.54
pH	(1)	(1)

[1] Within the range of 7.5 to 10.0 at all times.

(t) *Sawing or grinding spent neat oils—Subpart F—NSPS.* There shall be no discharge of process wastewater pollutants.

(u) *Sawing or grinding spent emulsions.*

SUBPART F—NSPS

Pollutant or pollutant property	Maximum for any 1 day	Maximum for monthly average
	mg/off-kg (pounds per million off-pounds) of titanium sawed or ground with emulsions	
Cyanide	0.053	0.022
Lead	0.077	0.037
Zinc	0.267	0.112
Ammonia	24.4	10.7
Fluoride	10.9	4.83
Oil and grease	3.66	2.20
TSS	7.51	3.57
pH	(1)	(1)

[1] Within the range of 7.5 to 10.0 at all times.

(v) *Sawing or grinding contact cooling water.*

SUBPART F—NSPS

Pollutant or pollutant property	Maximum for any 1 day	Maximum for monthly average
	mg/off-kg (pounds per million off-pounds) of titanium sawed or ground with contact cooling water	
Cyanide	0.138	0.057
Lead	0.200	0.095
Zinc	0.695	0.291
Ammonia	63.5	27.9
Fluoride	28.3	12.6
Oil and grease	9.52	5.71
TSS	19.5	9.28
pH	(1)	(1)

[1] Within the range of 7.5 to 10.0 at all times.

(w) *Dye penetrant testing wastewater.*

SUBPART F—NSPS

Pollutant or pollutant property	Maximum for any 1 day	Maximum for monthly average
	mg/off-kg (pounds per million off-pounds) of titanium tested using dye penetrant methods	
Cyanide	0.325	0.135
Lead	0.471	0.224
Zinc	1.64	0.683
Ammonia	149	65.7
Fluoride	66.7	29.6
Oil and grease	22.4	13.5
TSS	45.9	21.9
pH	(1)	(1)

[1] Within the range of 7.5 to 10.0 at all times.

(x) *Miscellaneous wastewater sources.*

SUBPART F—NSPS

Pollutant or pollutant property	Maximum for any 1 day	Maximum for monthly average
	mg/off-kg (pounds per million off-pounds) of titanium formed	
Cyanide	0.010	0.004
Lead	0.014	0.007
Zinc	0.048	0.020
Ammonia	4.32	1.90
Fluoride	1.93	0.856
Oil and grease	0.648	0.389
TSS	1.33	0.63
pH	(1)	(1)

[1] Within the range of 7.5 to 10.0 at all times.

(y) *Degreasing spent solvents—Subpart F—NSPS.* There shall be no discharge of process wastewater pollutant.

[50 FR 34270, Aug. 23, 1985; 51 FR 2887, Jan. 22, 1986]

§ 471.64 Pretreatment standards for existing sources (PSES).

Except as provided in 40 CFR 403.7 and 403.13, any existing source subject to this subpart which introduces pollutants into a publicly owned treatment works must comply with 40 CFR part 403 and by August 23, 1988 achieve the following pretreatment standards for existing sources (PSES). The mass of wastewater pollutants in titanium forming process wastewater introduced into a POTW shall not exceed the following values:

(a) *Rolling spent neat oils—Subpart F—PSES.* There shall be no discharge of process wastewater pollutants.

(b) *Rolling contact cooling water.*

SUBPART F—PSES

Pollutant or pollutant property	Maximum for any 1 day	Maximum for monthly average
	mg/off-kg (pounds per million off-pounds) of titanium rolled with contact cooling water	
Cyanide	0.142	0.059
Lead	0.205	0.098
Zinc	0.713	0.298
Ammonia	65.1	28.6
Fluoride	29.1	12.9

(c) *Drawing spent neat oils—Subpart F—PSES.* There shall be no discharge of process wastewater pollutants.

(d) *Extrusion spent neat oils—Subpart F—PSES.* There shall be no discharge of process wastewater pollutants.

(e) *Extrusion spent emulsions.*

SUBPART F—PSES

Pollutant or pollutant property	Maximum for any 1 day	Maximum for monthly average
	mg/off-kg (pounds per million off-pounds) of titanium extruded	
Cyanide	0.021	0.009
Lead	0.030	0.015
Zinc	0.105	0.044
Ammonia	9.59	4.22
Fluoride	4.28	1.90

(f) *Extrusion press hydraulic fluid leakage.*

SUBPART F—PSES

Pollutant or pollutant property	Maximum for any 1 day	Maximum for monthly average
	mg/off-kg (pounds per million off-pounds) of titanium extruded	
Cyanide	0.052	0.022
Lead	0.75	0.036
Zinc	0.260	0.109
Ammonia	23.7	10.5
Fluoride	10.6	4.70

(g) *Forging spent lubricants—Subpart F—PSES.* There shall be no discharge of process wastewater pollutants.

(h) *Forging contact cooling water.*

SUBPART F—PSES

Pollutant or pollutant property	Maximum for any 1 day	Maximum for monthly average
	mg/off-kg (pounds per million off-pounds) of forged titanium cooled with water	
Cyanide	0.029	0.012
Lead	0.042	0.020
Zinc	0.146	0.061
Ammonia	13.3	5.86
Fluoride	5.95	2.64

(i) *Forging equipment cleaning wastewater.*

SUBPART F—PSES

Pollutant or pollutant property	Maximum for any 1 day	Maximum for monthly average
	mg/off-kg (pounds per million off-pounds) of titanium forged	
Cyanide	0.012	0.005
Lead	0.017	0.008
Zinc	0.059	0.025
Ammonia	5.33	2.35
Fluoride	2.38	1.06

(j) *Forging press hydraulic fluid leakage.*

SUBPART F—PSES

Pollutant or pollutant property	Maximum for any 1 day	Maximum for monthly average
	mg/off-kg (pounds per million off-pounds) of titanium forged	
Cyanide	0.293	0.121
Lead	0.424	0.202
Zinc	1.48	0.616
Ammonia	135	59.2
Fluoride	60.1	26.7

(k) *Tube reducing spent lubricants—Subpart F—PSES.* There shall be no discharge of process wastewater pollutants.

(l) *Heat treatment contact cooling water—Subpart F—PSES.* There shall be no discharge allowance for the discharge of process wastewater pollutants.

(m) *Surface treatment spent baths.*

SUBPART F—PSES

Pollutant or pollutant property	Maximum for any 1 day	Maximum for monthly average
	mg/off-kg (pounds per million off-pounds) of titanium surface treated	
Cyanide	0.061	0.025
Lead	0.088	0.042
Zinc	0.304	0.127
Ammonia	27.7	12.2
Fluoride	12.4	5.49

(n) *Surface treatment rinse.*

SUBPART F—PSES

Pollutant or pollutant property	Maximum for any 1 day	Maximum for monthly average
	mg/off-kg (pounds per million off-pounds) of titanium surface treated	
Cyanide	0.847	0.351
Lead	1.23	0.584
Zinc	4.27	1.78
Ammonia	389	171
Fluoride	174	77.1

(o) *Wet air pollution control scrubber blowdown.*

SUBPART F—PSES

Pollutant or pollutant property	Maximum for any 1 day	Maximum for monthly average
	mg/off-kg (pounds per million off-pounds) of titanium surface treated or forged	
Cyanide	0.062	0.026
Lead	0.090	0.043
Zinc	0.313	0.131
Ammonia	28.5	12.6
Fluoride	12.8	5.65

(p) *Alkaline cleaning spent baths.*

SUBPART F—PSES

Pollutant or pollutant property	Maximum for any 1 day	Maximum for monthly average
	mg/off-kg (pounds per million off-pounds) of titanium alkaline cleaned	
Cyanide	0.070	0.029
Lead	0.101	0.048
Zinc	0.351	0.147
Ammonia	32.0	14.1
Fluoride	14.3	6.34

(q) *Alkaline cleaning rinse.*

SUBPART F—PSES

Pollutant or pollutant property	Maximum for any 1 day	Maximum for monthly average
	mg/off-kg (pounds per million off-pounds) of titanium alkaline cleaned	
Cyanide	0.080	0.033
Lead	0.116	0.055
Zinc	0.403	0.169
Ammonia	36.8	16.2
Fluoride	16.4	7.29

(r) *Molten salt rinse.*

SUBPART F—PSES

Pollutant or pollutant property	Maximum for any 1 day	Maximum for monthly average
	mg/off-kg (pounds per million off-pounds) of titanium treated with molten salt	
Cyanide	0.277	0.115
Lead	0.401	0.191
Zinc	1.40	0.583
Ammonia	128	56.0
Fluoride	56.8	25.2

(s) *Tumbling wastewater.*

SUBPART F—PSES

Pollutant or pollutant property	Maximum for any 1 day	Maximum for monthly average
	mg/off-kg (pounds per million off-pounds) of titanium tumbled	
Cyanide	0.023	0.010
Lead	0.033	0.016
Zinc	0.116	0.048
Ammonia	10.6	4.63
Fluoride	4.70	2.09

(t) *Sawing or grinding spent neat oils—Subpart F—PSES.* There shall be no discharge of process wastewater pollutants.

(u) *Sawing or grinding spent emulsions.*

SUBPART F—PSES

Pollutant or pollutant property	Maximum for any 1 day	Maximum for monthly average
	mg/off-kg (pounds per million off-pounds) of titanium sawed or ground with emulsions	
Cyanide	0.053	0.022
Lead	0.077	0.037
Zinc	0.267	0.112
Ammonia	24.4	10.7
Fluoride	10.9	4.83

(v) *Sawing or grinding contact cooling water.*

SUBPART F—PSES

Pollutant or pollutant property	Maximum for any 1 day	Maximum for monthly average
	mg/off-kg (pounds per million off-pounds) of titanium sawed or ground with contact cooling water	
Cyanide	0.138	0.057
Lead	0.200	0.095
Zinc	0.695	0.291
Ammonia	63.5	27.9
Fluoride	28.3	12.6

(w) *Dye penetrant testing wastewater.*

SUBPART F—PSES

Pollutant or pollutant property	Maximum for any 1 day	Maximum for monthly average
	mg/off-kg (pounds per million off-pounds) of titanium treated using dye penetrant methods	
Cyanide	0.325	0.135
Lead	0.471	0.224
Zinc	1.64	0.638
Ammonia	149	65.7
Fluoride	66.7	29.6

(x) *Miscellaneous wastewater sources.*

SUBPART F—PSES

Pollutant or pollutant property	Maximum for any 1 day	Maximum for monthly average
	mg/off-kg (pounds per million off-pounds) of titanium formed	
Cyanide	0.010	0.004
Lead	0.014	0.007
Zinc	0.048	0.020
Ammonia	4.32	1.90
Fluoride	1.93	0.856

(y) *Degreasing spent solvents—Subpart F—PSES.* There shall be no discharge of process wastewater pollutants.

[50 FR 34270, Aug. 23, 1985; 51 FR 2887, Jan. 22, 1986]

§ 471.65 Pretreatment standards for new sources (PSNS).

Except as provided in 40 CFR 403.7, any new source subject to this subpart which introduces pollutants into a publicly owned treatment works must comply with 40 CFR part 403 and achieve the following pretreatment standards for new sources (PSNS). The mass of wastewater pollutants in the titanium forming process wastewater shall not exceed the values set forth below:

(a) *Rolling spent neat oils—Subpart F—PSNS.* There shall be no discharge of process wastewater pollutants.

(b) *Rolling contact cooling water.*

SUBPART F—PSNS

Pollutant or pollutant property	Maximum for any 1 day	Maximum for monthly average
	mg/off-kg (pounds per million off-pounds) of titanium rolled with contact cooling water	
Cyanide	0.142	0.059
Lead	0.205	0.098
Zinc	0.713	0.298
Ammonia	65.1	28.6
Fluoride	29.1	12.9

(c) *Drawing spent neat oils—Subpart F—PSNS.* There shall be no discharge of process wastewater pollutants.

(d) *Extrusion spent neat oils—Subpart F—PSNS.* There shall be no discharge of process wastewater pollutants.

(e) *Extrusion spent emulsions.*

SUBPART F—PSNS

Pollutant or pollutant property	Maximum for any 1 day	Maximum for monthly average
	mg/off-kg (pounds per million off-pounds) of titanium extruded	
Cyanide	0.021	0.009
Lead	0.030	0.015
Zinc	0.105	0.044
Ammonia	9.59	4.22
Fluoride	4.28	1.90

(f) *Extrusion press hydraulic fluid leakage.*

SUBPART F—PSNS

Pollutant or pollutant property	Maximum for any 1 day	Maximum for monthly average
	mg/off-kg (pounds per million off-pounds) of titanium extruded	
Cyanide	0.052	0.022
Lead	0.075	0.036
Zinc	0.260	0.109
Ammonia	23.7	10.5
Fluoride	10.6	4.70

(g) *Forging spent lubricants—Subpart F—PSNS.* There shall be no discharge of process wastewater pollutants.

(h) *Forging contact cooling water.*

SUBPART F—PSNS

Pollutant or pollutant property	Maximum for any 1 day	Maximum for monthly average
	mg/off-kg (pounds per million off-pounds) of forged titanium cooled with water	
Cyanide	0.029	0.012
Lead	0.042	0.020
Zinc	0.146	0.061
Ammonia	13.3	5.86
Fluoride	5.95	2.64

(i) *Forging equipment cleaning wastewater.*

SUBPART F—PSNS

Pollutant or pollutant property	Maximum for any 1 day	Maximum for monthly average
	mg/off-kg (pounds per million off-pounds) of titanium forged	
Cyanide	0.012	0.005
Lead	0.017	0.008
Zinc	0.059	0.025
Ammonia	5.33	2.35
Fluoride	2.38	1.06

(j) *Forging press hydraulic fluid leakage.*

SUBPART F—PSNS

Pollutant or pollutant property	Maximum for any 1 day	Maximum for monthly average
	mg/off-kg (pounds per million off-pounds) of titanium forged	
Cyanide	0.293	0.121
Lead	0.424	0.202
Zinc	1.48	0.616
Ammonia	135	59.2
Fluoride	60.1	26.7

(k) *Tube reducing spent lubricants—Subpart F—PSNS.* There shall be no discharge of process wastewater pollutants.

(l) *Heat treatment contact cooling water—Subpart F—PSNS.* There shall be no discharge allowance for the discharge of process wastewater pollutants.

(m) *Surface treatment spent baths.*

SUBPART F—PSNS

Pollutant or pollutant property	Maximum for any 1 day	Maximum for monthly average
	mg/off-kg (pounds per million off-pounds) of titanium surface treated	
Cyanide	0.061	0.025
Lead	0.088	0.042
Zinc	0.304	0.127
Ammonia	27.7	12.2
Fluoride	12.4	5.49

(n) *Surface treatment rinse.*

SUBPART F—PSNS

Pollutant or pollutant property	Maximum for any 1 day	Maximum for monthly average
	mg/off-kg (pounds per million off-pounds) of titanium surface treated	
Cyanide	0.847	0.351
Lead	1.23	0.584
Zinc	4.27	1.78
Ammonia	389	171
Fluoride	174	77.1

(o) *Wet air pollution control scrubber blowdown.*

SUBPART F—PSNS

Pollutant or pollutant property	Maximum for any 1 day	Maximum for monthly average
	mg/off-kg (pounds per million off-pounds) of titanium surface treated or forged	
Cyanide	0.062	0.026
Lead	0.090	0.043
Zinc	0.313	0.131
Ammonia	28.5	12.6
Fluoride	12.8	5.65

(p) *Alkaline cleaning spent baths.*

SUBPART F—PSNS

Pollutant or pollutant property	Maximum for any 1 day	Maximum for monthly average
	mg/off-kg (pounds per million off-pounds) of titanium alkaline cleaned	
Cyanide	0.070	0.029
Lead	0.101	0.048
Zinc	0.351	0.147
Ammonia	32.0	14.1
Fluoride	14.3	6.34

(q) *Alkaline cleaning rinse.*

SUBPART F—PSNS

Pollutant or pollutant property	Maximum for any 1 day	Maximum for monthly average
	mg/off-kg (pounds per million off-pounds) of titanium alkaline cleaned	
Cyanide	0.080	0.033
Lead	0.116	0.055
Zinc	0.403	0.169
Ammonia	36.8	16.2
Fluoride	16.4	7.29

(r) *Molten salt rinse.*

SUBPART F—PSNS

Pollutant or pollutant property	Maximum for any 1 day	Maximum for monthly average
	mg/off-kg (pounds per million off-pounds) of titanium treated with molten salt	
Cyanide	0.277	0.115
Lead	0.401	0.191
Zinc	1.40	0.583
Ammonia	128	56.0
Fluoride	56.8	25.2

(s) *Tumbling wastewater.*

SUBPART F—PSNS

Pollutant or pollutant property	Maximum for any 1 day	Maximum for monthly average
	mg/off-kg (pounds per million off-pounds) of titanium tumbled	
Cyanide	0.023	0.010
Lead	0.033	0.016
Zinc	0.116	0.048
Ammonia	10.6	4.63
Fluoride	4.70	2.09

(t) *Sawing or grinding spent neat oils—Subpart F—PSNS.* There shall be no discharge of process wastewater pollutants.

(u) *Sawing or grinding spent emulsions.*

SUBPART F—PSNS

Pollutant or pollutant property	Maximum for any 1 day	Maximum for monthly average
	mg/off-kg (pounds per million off-pounds) of titanium sawed or ground with emulsions	
Cyanide	0.053	0.022
Lead	0.077	0.037
Zinc	0.267	0.112
Ammonia	24.4	10.7
Fluoride	10.9	4.83

(v) *Sawing or grinding contact cooling water.*

SUBPART F—PSNS

Pollutant or pollutant property	Maximum for any 1 day	Maximum for monthly average
	mg/off-kg (pounds per million off-pounds) of titanium sawed or ground with contact cooling water	
Cyanide	0.138	0.057
Lead	0.200	0.095
Zinc	0.695	0.291
Ammonia	63.5	27.9
Fluoride	28.3	12.6

(w) *Dye penetrant testing wastewater.*

SUBPART F—PSNS

Pollutant or pollutant property	Maximum for any 1 day	Maximum for monthly average
	mg/off-kg (pounds per million off-pounds) of titanium treated using dye penetrant methods	
Cyanide	0.325	0.135
Lead	0.471	0.224
Zinc	1.64	0.683
Ammonia	149	65.7
Fluoride	66.7	29.6

(x) *Miscellaneous wastewater sources.*

SUBPART F—PSNS

Pollutant or pollutant property	Maximum for any 1 day	Maximum for monthly average
	mg/off-kg (pounds per million off-pounds) of titanium formed	
Cyanide	0.010	0.004
Lead	0.014	0.007
Zinc	0.048	0.020
Ammonia	4.32	1.90
Fluoride	1.93	0.856

(y) *Degreasing spent solvents—Subpart F—PSNS.* There shall be no discharge of process wastewater pollutants.

[50 FR 34270, Aug. 23, 1985; 51 FR 2887, Jan. 22, 1986]

§ 471.66 Effluent limitations representing the degree of effluent reduction attainable by the application of the best conventional pollutant control technology (BCT). [Reserved]

Subpart G—Uranium Forming Subcategory

§ 471.70 Applicability; description of the uranium forming subcategory.

This subpart applies to discharges of pollutants to waters of the United States, and introductions of pollutants into publicly owned treatment works from the process operations of the uranium forming subcategory.

§ 471.71 Effluent limitations representing the degree of effluent reduction attainable by the application of the best practicable control technology currently available (BPT).

Except as provided in 40 CFR 125.30 through 125.32, any existing point source subject to this subpart must achieve the following effluent limitations for the process operations representing the degree of effluent reduction attainable by the application of the best praticable control technology currently available (BPT):

(a) *Extrusion spent lubricants—Subpart G—BPT*. There shall be no discharge process wastewater pollutants.

(b) *Extrusion tool contact cooling water*.

SUBPART G—BPT

Pollutant or pollutant property	Maximum for any 1 day	Maximum for monthly average
	mg/off-kg (pounds per million off-pounds) of uranium extruded	
Cadium	0.117	0.052
Chromium	0.152	0.062
Copper	0.654	0.344
Lead	0.145	0.069
Nickel	0.661	0.437
Fluoride	20.5	9.08
Molybdenum	2.28	1.18
Oil and grease	6.88	4.13
TSS	14.1	6.71
pH	(1)	(1)

[1] Within the range of 7.5 to 10.0 at all times.

(c) *Heat treatment contact cooling water*.

SUBPART G—BPT

Pollutant or pollutant property	Maximum for any 1 day	Maximum for monthly average
	mg/off-kg (pounds per million off-pounds) of extruded or forged uranium heat treated	
Cadium	0.646	0.285
Chromium	0.836	0.342
Copper	3.61	1.90
Lead	0.798	0.380
Nickel	3.65	2.42
Fluoride	113	50.2
Molybdenum	12.6	6.5
Oil and grease	38	22.8
TSS	77.9	37.1
pH	(1)	(1)

[1] Within the range of 7.5 to 10.0 at all times.

(d) *Forging spent lubricants—Subpart G—BPT*. There shall be no discharge of process wastewater pollutants.

(e) *Surface treatment spent baths*.

SUBPART G—BPT

Pollutant or pollutant property	Maximum for any 1 day	Maximum for monthly average
	mg/off-kg (pounds per million off-pounds) of uranium surface treated	
Cadmium	0.010	0.004
Chromium	0.012	0.005
Copper	0.052	0.027
Lead	0.012	0.006
Nickel	0.052	0.035
Fluoride	1.62	0.718
Molybdenum	0.180	0.093
Oil and grease	0.544	0.327
TSS	1.12	0.531
pH	(1)	(1)

[1] Within the range of 7.5 to 10.0 at all times.

(f) *Surface treatment rinse*.

SUBPART G—BPT

Pollutant or pollutant property	Maximum for any 1 day	Maximum for monthly average
	mg/off-kg (pounds per million off-pounds) of uranium surface treated	
Cadmium	0.115	0.050
Chromium	0.149	0.061
Copper	0.641	0.337
Lead	0.142	0.068
Nickel	0.647	0.428
Fluoride	20.1	8.90
Molybdenum	2.23	1.16
Oil and grease	6.74	4.05
TSS	13.8	6.57
pH	(1)	(1)

[1] Within the range of 7.5 to 10.0 at all times.

(g) *Wet air pollution control scrubber blowdown.*

SUBPART G—BPT

Pollutant or pollutant property	Maximum for any 1 day	Maximum for monthly average
	mg/off-kg (pounds per million off-pounds) of uranium surface treated	
Cadmium	0.00	0.0006
Chromium	0.002	0.0007
Copper	0.007	0.004
Lead	0.002	0.0007
Nickel	0.007	0.005
Fluoride	0.208	0.092
Molybdenum	0.023	0.012
Oil and grease	0.070	0.042
TSS	0.143	0.068
pH	(1)	(1)

[1] Within the range of 7.5 to 10.0 at all times.

(h) *Sawing or grinding spent emulsions.*

SUBPART G—BPT

Pollutant or pollutant property	Maximum for any 1 day	Maximum for monthly average
	mg/off-kg (pounds per million off-pounds) of uranium sawed or ground with emulsions	
Cadmium	0.002	0.0009
Chromium	0.003	0.001
Copper	0.011	0.006
Lead	0.003	0.001
Nickel	0.011	0.007
Fluoride	0.338	0.150
Molybdenum	0.038	0.020
Oil and grease	0.114	0.068
TSS	0.233	0.111
pH	(1)	(1)

[1] Within the range of 7.5 to 10.0 at all times.

(i) *Sawing or grinding contact cooling water.*

SUBPART G—BPT

Pollutant or pollutant property	Maximum for any 1 day	Maximum for monthly average
	mg/off-kg (pounds per million off-pounds) of uranium sawed or ground with contact cooling ater	
Cadmium	0.561	0.248
Chromium	0.726	0.297
Copper	3.14	1.65
Lead	0.693	0.330
Nickel	3.17	2.1
Fluoride	98.2	43.6
Molybdenum	10.9	5.65
Oil and grease	33.0	19.8
TSS	67.7	32.2
pH	(1)	(1)

[1] Within the range of 7.5 to 10.0 at all times.

(j) *Sawing or grinding rinse.*

SUBPART G—BPT

Pollutant or pollutant property	Maximum for any 1 day	Maximum for monthly average
	mg/off-kg (pounds per million off-pounds) of sawed or ground uranium rinses	
Cadmium	0.002	0.0007
Chromium	0.002	0.0009
Copper	0.009	0.005
Lead	0.002	0.001
Nickel	0.009	0.006
Fluoride	0.277	0.123
Molybdenum	0.031	0.016
Oil and grease	0.093	0.056
TSS	0.191	0.091
pH	(1)	(1)

[1] Within the range of 7.5 to 10.0 at all times.

(k) *Area cleaning rinse.*

SUBPART G—BPT

Pollutant or pollutant property	Maximum for any 1 day	Maximum for monthly average
	mg/off-kg (pounds per million off-pounds) of uranium formed	
Cadmium	0.015	0.007
Chromium	0.019	0.008
Copper	0.082	0.043
Lead	0.018	0.009
Nickel	0.083	0.055
Fluoride	2.56	1.14
Molybdenum	0.284	0.147
Oil and grease	0.858	0.515
TSS	1.76	0.837
pH	(1)	(1)

[1] Within the range of 7.5 to 10.0 at all times.

(l) *Drum washwater.*

SUBPART G—BPT

Pollutant or pollutant property	Maximum for any 1 day	Maximum for monthly average
	mg/off-kg (pounds per million off-pounds) of uranium formed	
Cadmium	0.015	0.007
Chromium	0.020	0.008
Copper	0.084	0.045
Lead	0.019	0.009
Nickel	0.085	0.057
Fluoride	2.64	1.17
Molybdenum	0.293	0.152
Oil and grease	0.886	0.532
TSS	1.82	0.864
pH	(1)	(1)

[1] Within the range of 7.5 to 10.0 at all times.

(m) *Laundry washwater.*

SUBPART G—BPT

Pollutant or pollutant property	Maximum for any 1 day	Maximum for monthly average
	mg/employee—day	
Cadmium	17.8	7.86
Chromium	23.1	9.43
Copper	99.6	52.4
Lead	22.0	10.5
Nickel	101	66.6
Fluoride	3,120	1,390
Molybdenum	347	179
Oil and grease	1,050	629
TSS	2,150	1,020
pH	(1)	(1)

[1] Within the range of 7.5 to 10.0 at all times.

(n) *Degreasing spent solvents—Subpart G—BPT.* There shall be no discharge of process wastewater pollutants.

[50 FR 34270, Aug. 23, 1985; 51 FR 2888, Jan. 22, 1986]

§ 471.72 Effluent limitations representing the degree of effluent reduction attainable by the application of the best available technology economically achievable (BAT).

Except as provided in 40 CFR 125.30 through 125.32, any existing point source subject to this subpart must achieve the following effluent limitations representing the degree of effluent reduction attainable by the application of the best available technology economically achievable (BAT):

(a) *Extrusion spent lubricants—Subpart G—BAT.* There shall be no discharge of process wastewater pollutants.

(b) *Extrusion tool contact cooling water.*

SUBPART G—BAT

Pollutant or pollutant property	Maximum for any 1 day	Maximum for monthly average
	mg/off-kg (pounds per million off-pounds) of uranium extruded	
Cadmium	0.007	0.003
Chromium	0.013	0.005
Copper	0.044	0.021
Lead	0.010	0.005
Nickel	0.019	0.013
Fluoride	2.05	0.908
Molybdenum	0.173	0.077

(c) *Heat treatment contact cooling water.*

SUBPART G—BAT

Pollutant or pollutant property	Maximum for any 1 day	Maximum for monthly average
	mg/off-kg (pounds per million off-pounds) of extruded or forged uranium heat treated	
Cadmium	0.006	0.003
Chromium	0.012	0.005
Copper	0.040	0.019
Lead	0.009	0.004
Nickel	0.017	0.012
Fluoride	1.86	0.827
Molybdenum	0.158	0.070

(d) *Forging spent lubricants—Subpart G—BAT.* There shall be no discharge of process wastewater pollutants.

(e) *Surface treatment spent baths.*

SUBPART G—BAT

Pollutant or pollutant property	Maximum for any 1 day	Maximum for monthly average
	mg/off-kg (pounds per million off-pounds) of uranium surface treated	
Cadmium	0.006	0.002
Chromium	0.010	0.004
Copper	0.035	0.017
Lead	0.008	0.004
Nickel	0.015	0.010
Fluoride	1.62	0.718
Molybdenum	0.137	0.061

(f) *Surface treatment rinse.*

SUBPART G—BAT

Pollutant or pollutant property	Maximum for any 1 day	Maximum for monthly average
	mg/off-kg (pounds per million off-pounds) of uranium surface treated	
Cadmium	0.068	0.027
Chromium	0.125	0.051
Copper	0.432	0.260
Lead	0.095	0.044
Nickel	0.186	0.125
Fluoride	20.1	8.90
Molybdenum	1.70	0.752

(g) *Wet air pollution control scrubber blowdown.*

SUBPART G—BAT

Pollutant or pollutant property	Maximum for any 1 day	Maximum for monthly average
	mg/off-kg (pounds per million off-pounds) of uranium surface treated	
Cadmium	0.0007	0.0003
Chromium	0.001	0.0005
Copper	0.005	0.002
Lead	0.001	0.0005
Nickel	0.002	0.001
Fluoride	0.208	0.092
Molybdenum	0.018	0.008

(h) *Sawing or grinding spent emulsions.*

SUBPART G—BAT

Pollutant or pollutant property	Maximum for any 1 day	Maximum for monthly average
	mg/off-kg (pounds per million off-pounds) of uranium sawed or ground with emulsions	
Cadmium	0.001	0.0005
Chromium	0.002	0.0009
Copper	0.007	0.004
Lead	0.002	0.001
Nickel	0.003	0.002
Fluoride	0.338	0.150
Molybdenum	0.029	0.013

(i) *Sawing or grinding contact cooling water.*

SUBPART G—BAT

Pollutant or pollutant property	Maximum for any 1 day	Maximum for monthly average
	mg/off-kg (pounds per million off-pounds) of uranium sawed or ground with contact cooling water	
Cadmium	0.033	0.013
Chromium	0.061	0.025
Copper	0.211	0.101
Lead	0.046	0.022
Nickel	0.091	0.061
Fluoride	9.82	4.36
Molybdenum	0.830	0.368

(j) *Sawing or grinding rinse.*

SUBPART G—BAT

Pollutant or pollutant property	Maximum for any 1 day	Maximum for monthly average
	mg/off-kg (pounds per million off-pounds) of sawed or ground uranium rinse	
Cadmium	0.001	0.0004
Chromium	0.002	0.0007
Copper	0.006	0.003
Lead	0.002	0.0006
Nickel	0.003	0.002
Fluoride	0.277	0.123
Molybdenum	0.024	0.011

(k) *Area cleaning rinse.*

SUBPART G—BAT

Pollutant or pollutant property	Maximum for any 1 day	Maximum for monthly average
	mg/off-kg (pounds per million off-pounds) of uranium formed	
Cadmium	0.009	0.004
Chromium	0.016	0.007
Copper	0.055	0.026
Lead	0.012	0.006
Nickel	0.024	0.016
Fluoride	2.56	1.14
Molybdenum	0.216	0.096

(l) *Drum, washwater.*

SUBPART G—BAT

Pollutant or pollutant property	Maximum for any 1 day	Maximum for monthly average
	mg/off-kg (pounds per million off-pounds) of uranium formed	
Cadmium	0.009	0.004
Chromium	0.017	0.007
Copper	0.057	0.027
Lead	0.013	0.006
Nickel	0.025	0.017
Fluoride	2.64	1.17
Molybdenum	0.223	0.099

(m) *Laundry washwater.*

SUBPART G—BAT

Pollutant or pollutant property	Maximum for any 1 day	Maximum for monthly average
	mg/employee—day	
Cadmium	5.24	2.10
Chromium	9.70	3.93
Copper	33.6	16.0
Lead	7.34	3.41
Nickel	14.4	9.70
Fluoride	1.560	692
Molybdenum	132	58.4

(n) *Degreasing spent solvents—Subpart G—BAT.* There shall be no discharge of process wastewater pollutants.

[50 FR 34270, Aug. 23, 1985; 51 FR 2888, Jan. 22, 1986]

§ 471.73 New source performance standards (NSPS).

Any new source subject to this subpart must achieve the following new source performance standards (NSPS). The mass of pollutants in the uranium forming process wastewater shall not exceed the following values:

(a) *Extrusion spent lubricants—Subpart G—NSPS.* There shall be no discharge of process wastewater pollutants.

(b) *Extrusion tool contact cooling water.*

SUBPART G—NSPS

Pollutant or pollutant property	Maximum for any 1 day	Maximum for monthly average
	mg/off-kg (pounds per million off-pounds) of uranium extruded	
Cadmium	0.007	0.003
Chromium	0.013	0.005
Copper	0.044	0.021
Lead	0.010	0.005
Nickel	0.019	0.013
Fluoride	2.05	0.908
Molybdenum	0.173	0.077
Oil and grease	0.344	0.344
TSS	0.516	0.413
pH	(1)	(1)

[1] Within the range of 7.5 to 10.0 at all times.

(c) *Heat treatment contact cooling water.*

SUBPART G—NSPS

Pollutant or pollutant property	Maximum for any 1 day	Maximum for monthly average
	mg/off-kg (pounds per million off-pounds) of extruded or forged uranium heat treated	
Cadmium	0.006	0.003
Chromium	0.012	0.005
Copper	0.040	0.019
Lead	0.009	0.004
Nickel	0.017	0.012
Fluoride	1.86	0.827
Molybdenum	0.158	0.070
Oil and grease	0.313	0.313
TSS	0.470	0.376
pH	(1)	(1)

[1] Within the range of 7.5 to 10.0 at all times.

(d) *Forging spent lubricants—Subpart G—NSPS.* There shall be no discharge of process wastewater pollutants.

(e) *Surface treatment spent baths.*

SUBPART G—NSPS

Pollutant or pollutant property	Maximum for any 1 day	Maximum for monthly average
	mg/off-kg (pounds per million off-pounds) of uranium surface treated	
Cadmium	0.006	0.002
Chromium	0.010	0.004
Copper	0.035	0.017
Lead	0.008	0.004
Nickel	0.015	0.010
Fluoride	1.62	0.718
Molybdenum	0.137	0.061
Oil and grease	0.272	0.272
TSS	0.408	0.327
pH	(1)	(1)

[1] Within the range of 7.5 to 10.0 at all times.

(f) *Surface treatment rinse.*

SUBPART G—NSPS

Pollutant or pollutant property	Maximum for any 1 day	Maximum for monthly average
	mg/off-kg (pounds per million off-pounds) of uranium surface treated	
Cadmium	0.068	0.027
Chromium	0.125	0.051
Copper	0.432	0.206
Lead	0.095	0.044
Nickel	0.186	0.125
Fluoride	20.1	8.90
Molybdenum	1.70	0.752
Oil and grease	3.37	3.37
TSS	5.06	4.05
pH	(1)	(1)

[1] Within the range of 7.5 to 10.0 at all times.

(g) *Wet air pollution control scrubber blowdown.*

SUBPART G—NSPS

Pollutant or pollutant property	Maximum for any 1 day	Maximum for monthly average
	mg/off-kg (pounds per million off-pounds) of uranium surface treated	
Cadmium	0.0007	0.0003
Chromium	0.001	0.0005
Copper	0.005	0.002
Lead	0.001	0.0005
Nickel	0.002	0.001
Fluoride	0.208	0.092
Molybdenum	0.018	0.008
Oil and grease	0.035	0.035
TSS	0.053	0.042
pH	(1)	(1)

[1] Within the range of 7.5 to 10.0 at all times.

(h) *Sawing or grinding spent emulsions.*

SUBPART G—NSPS

Pollutant or pollutant property	Maximum for any 1 day	Maximum for monthly average
	mg/off-kg (pounds per million off-pounds) of uranium sawed or ground with emulsions	
Cadmium	0.001	0.0005
Chromium	0.002	0.0009
Copper	0.007	0.004
Lead	0.002	0.0008
Nickel	0.003	0.002
Fluoride	0.338	0.150
Molybdenum	0.029	0.013
Oil and grease	0.057	0.057
TSS	0.085	0.068
pH	(1)	(1)

[1] Within the range of 7.5 to 10.0 at all times.

(i) *Sawing or grinding contact cooling water.*

SUBPART G—NSPS

Pollutant or pollutant property	Maximum for any 1 day	Maximum for monthly average
	mg/off-kg (pounds per million off-pounds) of uranium sawed or ground with contact cooling water	
Cadmium	0.033	0.013
Chromium	0.061	0.025
Copper	0.211	0.101
Lead	0.046	0.022
Nickel	0.091	0.061
Fluoride	9.82	4.36
Molybdenum	0.830	0.368
Oil and grease	1.65	1.65
TSS	2.48	1.98
pH	(1)	(1)

[1] Within the range of 7.5 to 10.0 at all times.

(j) *Sawing or grinding rinse.*

SUBPART G—NSPS

Pollutant or pollutant property	Maximum for any 1 day	Maximum for monthly average
	mg/off-kg (pounds per million off-pounds) of sawed or ground uranium rinsed	
Cadmium	0.001	0.0004
Chromium	0.002	0.0007
Copper	0.006	0.003
Lead	0.002	0.0006
Nickel	0.003	0.002
Fluoride	0.277	0.123
Molybdenum	0.024	0.011
Oil and grease	0.047	0.047
TSS	0.070	0.056
pH	(1)	(1)

[1] Within the range of 7.5 to 10.0 at all times.

(k) *Area cleaning rinse.*

SUBPART G—NSPS

Pollutant or pollutant property	Maximum for any 1 day	Maximum for monthly average
	mg/off-kg (pounds per million off-pounds) of uranium formed	
Cadmium	0.009	0.004
Chromium	0.016	0.007
Copper	0.055	0.026
Lead	0.012	0.006
Nickel	0.024	0.016
Fluoride	2.56	1.14
Molybdenum	0.216	0.096
Oil and grease	0.429	0.429
TSS	0.644	0.515
pH	(1)	(1)

[1] Within the range of 7.5 to 10.0 at all times.

(l) *Drum washwater.*

SUBPART G—NSPS

Pollutant or pollutant property	Maximum for any 1 day	Maximum for monthly average
	mg/off-kg (pounds per million off-pounds) of uranium formed	
Cadmium	0.009	0.004
Chromium	0.017	0.007
Copper	0.057	0.027
Lead	0.013	0.006
Nickel	0.025	0.017
Fluoride	2.64	1.17
Molybdenum	0.223	0.099
Oil and grease	0.443	0.443
TSS	0.665	0.532
pH	(1)	(1)

[1] Within the range of 7.5 to 10.0 at all times.

(m) *Laundry washwater.*

SUBPART G—NSPS

Pollutant or pollutant property	Maximum for any 1 day	Maximum for monthly average
	mg/employee—day	
Cadmium	5.24	2.10
Chromium	9.70	3.93
Copper	33.6	16.0
Lead	7.34	3.41
Nickel	14.4	9.70
Fluoride	1,560	692
Molybdenum	132	58.4
Oil and grease	262	262
TSS	393	315
pH	(1)	(1)

[1] Within the range of 7.5 to 10.0 at all times.

(n) *Degreasing spent solvents—Subpart G—NSPS.* There shall be no discharge of process waster pollutants.

[50 FR 34270, Aug. 23, 1985; 51 FR 2888, Jan. 22, 1986]

§ 471.74 Pretreatment standards for existing sources (PSES). [Reserved]

§ 471.75 Pretreatment standards for new sources (PSNS).

Except as provided in 40 CFR 403.7, any new source subject to this subpart which introduces pollutants into a publicly owned treatment works must comply with 40 CFR part 403 and achieve the following pretreatment standards for new sources (PSNS). The mass of wastewater pollutants in uranium forming process wastewater introduced into a POTW shall not exceed the following values:

(a) *Extrusion spent lubricants—Subpart G—PSNS.* There shall be no discharge of process wastewater pollutants.

(b) *Extrusion tool contact cooling water.*

SUBPART G—PSNS

Pollutant or pollutant property	Maximum for any 1 day	Maximum for monthly average
	mg/off-kg (pounds per million off-pounds) of uranium extruded	
Cadmium	0.007	0.003
Chromium	0.013	0.005
Copper	0.044	0.021
Lead	0.010	0.005
Nickel	0.019	0.013
Fluoride	2.05	0.908
Molybdenum	0.173	0.077

(c) *Heat treatment contact cooling water.*

SUBPART G—PSNS

Pollutant or pollutant property	Maximum for any 1 day	Maximum for monthly average
	mg/off-kg (pounds per million off-pounds) of extruded or forged uranium heat treated	
Cadmium	0.006	0.003
Chromium	0.012	0.005
Copper	0.040	0.019
Lead	0.009	0.004
Nickel	0.017	0.012
Fluoride	1.86	0.827
Molybdenum	0.158	0.070

(d) *Forging spent lubricants—Subpart G—PSNS.* There shall be no discharge of process wastewater pollutants.

(e) *Surface treatment spent baths.*

SUBPART G—PSNS

Pollutant or pollutant property	Maximum for any 1 day	Maximum for monthly average
	mg/off-kg (pounds per million off-pounds) of uranium surface treated	
Cadmium	0.006	0.002
Chromium	0.010	0.004
Copper	0.035	0.017
Lead	0.008	0.004
Nickel	0.015	0.010
Fluoride	1.62	0.718
Molybdenum	0.137	0.061

(f) *Surface treatment rinse.*

SUBPART G—PSNS

Pollutant or pollutant property	Maximum for any 1 day	Maximum for monthly average
	mg/off-kg (pounds per million off-pounds) of uranium surface treated	
Cadmium	0.068	0.027
Chromium	0.125	0.051
Copper	0.432	0.206
Lead	0.095	0.044
Nickel	0.186	0.125
Fluoride	20.1	8.90
Molybdenum	1.70	0.752

(g) *Wet air pollution control scrubber blowdown.*

SUBPART G—PSNS

Pollutant or pollutant property	Maximum for any 1 day	Maximum for monthly average
	mg/off-kg (pounds per million off-pounds) of uranium surface treated	
Cadmium	0.0007	0.0003
Chromium	0.001	0.0005
Copper	0.005	0.002
Lead	0.001	0.0005
Nickel	0.002	0.001
Fluoride	0.208	0.092
Molybdenum	0.018	0.008

(h) *Sawing or grinding spent emulsions.*

SUBPART G—PSNS

Pollutant or pollutant property	Maximum for any 1 day	Maximum for monthly average
	mg/off-kg (pounds per million off-pounds) of uranium sawed or ground with emulsions	
Cadmium	0.001	0.0005
Chromium	0.002	0.0009
Copper	0.007	0.004
Lead	0.002	0.0008
Nickel	0.003	0.002
Fluoride	0.338	0.150
Molybdenum	0.029	0.013

(i) *Sawing or grinding contact cooling water.*

SUBPART G—PSNS

Pollutant or pollutant property	Maximum for any 1 day	Maximum for monthly average
	mg/off-kg (pounds per million off-pounds) of uranium sawed or ground with contact cooling water	
Cadmium	0.033	0.013
Chromium	0.061	0.025
Copper	0.211	0.101
Lead	0.046	0.022
Nickel	0.091	0.061
Fluoride	9.82	4.36
Molybdenum	0.830	0.368

(j) *Sawing or grinding rinse.*

SUBPART G—PSNS

Pollutant or pollutant property	Maximum for any 1 day	Maximum for monthly average
	mg/off-kg (pounds per million off-pounds) of sawed or ground uranium rinsed	
Cadmium	0.001	0.0004
Chromium	0.002	0.0007
Copper	0.006	0.003
Lead	0.002	0.0006
Nickel	0.003	0.002
Fluoride	0.277	0.123
Molybdenum	0.024	0.011

(k) *Area cleaning rinse.*

SUBPART G—PSNS

Pollutant or pollutant property	Maximum for any 1 day	Maximum for monthly average
	mg/off-kg (pounds per million off-pounds) of uranium formed	
Cadmium	0.009	0.004
Chromium	0.016	0.007
Copper	0.055	0.026
Lead	0.012	0.006
Nickel	0.024	0.016
Fluoride	2.56	1.14
Molybdenum	0.216	0.096

(l) *Drum washwater.*

SUBPART G—PSNS

Pollutant or pollutant property	Maximum for any 1 day	Maximum for monthly average
	mg/off-kg (pounds per million off-pounds) of uranium formed	
Cadmium	0.009	0.004
Chromium	0.017	0.007
Copper	0.057	0.027
Lead	0.013	0.006
Nickel	0.025	0.017
Fluoride	2.64	1.17
Molybdenum	0.223	0.099

(m) *Laundry washwater.*

SUBPART G—PSNS

Pollutant or pollutant property	Maximum for any 1 day	Maximum for monthly average
	mg/employee—day	
Cadmium	5.24	2.10
Chromium	9.70	3.93
Copper	33.6	16.0
Lead	7.34	3.41
Nickel	14.4	9.70
Fluoride	1,560	692
Molybdenum	132	58.4

(n) *Degreasing spent solvents—Subpart G—PSNS.* There shall be no discharge of process wastewater pollutants.

[50 FR 34270, Aug. 23, 1985; 51 FR 2888, Jan. 22, 1986]

§ 471.76 Effluent limitations representing the degree of effluent reduction attainable by the application of the best conventional pollutant control technology (BCT). [Reserved]

Subpart H—Zinc Forming Subcategory

§ 471.80 Applicability; description of the zinc forming subcategory.

This subpart applies to discharges of pollutants to waters of the United States, and introductions of pollutants into publicly owned treatment works from the process operations of the zinc forming subcategory.

§ 471.81 Effluent limitations representing the degree of effluent reduction attainable by the application of the best practicable control technology currently available (BPT).

Except as provided in 40 CFR 125.30 through 125.32, any existing point source subject to this subpart must achieve the following effluent limitations for the process operations representing the degree of effluent reduction attainable by the application of the best practicable control technology currently available (BPT):

(a) *Rolling spent neat oils—Subpart H—BPT.* There shall be no discharge of process wastewater pollutants.

(b) *Rolling spent emulsions.*

SUBPART H—BPT

Pollutant or pollutant property	Maximum for any 1 day	Maximum for monthly average
	mg/off-kg (pounds per million off-pounds) of zinc rolled with emulsions	
Chromium	0.0006	0.0003
Copper	0.003	0.002
Cyanide	0.0004	0.0002
Zinc	0.002	0.0009
Oil and grease	0.028	0.017
TSS	0.057	0.027
pH	(1)	(1)

[1] Within the range of 7.5 to 10.0 at all times.

(c) *Rolling contact cooling water.*

SUBPART H—BPT

Pollutant or pollutant property	Maximum for any 1 day	Maximum for monthly average
	mg/off-kg (pounds per million off-pounds) of zinc rolled with contact cooling water	
Chromium	0.236	0.0097
Copper	1.02	0.536
Cyanide	0.156	0.065
Zinc	0.783	0.327
Oil and grease	10.7	6.43
TSS	22.0	10.5
pH	(1)	(1)

1 Within the range of 7.5 to 10.0 at all times.

(d) *Drawing spent emulsions.*

SUBPART H—BPT

Pollutant or pollutant property	Maximum for any 1 day	Maximum for monthly average
	mg/off-kg (pounds per million off-pounds) of zinc drawn with emulsions	
Chromium	0.003	0.001
Copper	0.011	0.006
Cyanide	0.002	0.0007
Zinc	0.009	0.004
Oil and grease	0.116	0.070
TSS	0.238	0.113
pH	(1)	(1)

1 Within the range of 7.5 to 10.0 at all times.

(e) *Direct chill casting contact cooling water.*

SUBPART H—BPT

Pollutant or pollutant property	Maximum for any 1 day	Maximum for monthly average
	mg/off-kg (pounds per million off-pounds) of zinc cast by the direct chill method	
Chromium	0.222	0.091
Copper	0.960	0.505
Cyanide	0.147	0.061
Zinc	0.738	0.308
Oil and grease	10.1	6.06
TSS	20.7	9.85
pH	(1)	(1)

1 Within the range of 7.5 to 10.0 at all times.

(f) *Stationary casting contact cooling water—Subpart H—BPT.* There shall be no discharge of process wastewater pollutants.

(g) *Heat treatment contact cooling water.*

SUBPART H—BPT

Pollutant or pollutant property	Maximum for any 1 day	Maximum for monthly average
	mg/off-kg (pounds per million off-pounds) of zinc heat treated	
Chromium	0.336	0.138
Copper	1.45	0.763
Cyanide	0.221	0.092
Zinc	1.12	0.466
Oil and grease	15.3	9.16
TSS	31.3	14.9
pH	(1)	(1)

1 Within the range of 7.5 to 10.0 at all times.

(h) *Surface treatment spent baths.*

SUBPART H—BPT

Pollutant or pollutant property	Maximum for any 1 day	Maximum for monthly average
	mg/off-kg (pounds per million off-pounds) of zinc surface treated	
Chromium	0.039	0.016
Copper	0.169	0.089
Cyanide	0.026	0.011
Zinc	0.130	0.054
Oil and grease	1.78	1.07
TSS	3.64	1.73
pH	(1)	(1)

1 Within the range of 7.5 to 10.0 at all times.

(i) *Surface treatment rinse.*

SUBPART H—BPT

Pollutant or pollutant property	Maximum for any 1 day	Maximum for monthly average
	mg/off-kg (pounds per million off-pounds) of zinc surface treated	
Chromium	1.58	0.645
Copper	6.80	3.58
Cyanide	1.04	0.430
Zinc	5.23	2.19
Oil and grease	71.6	43.0
TSS	147	69.8
pH	(1)	(1)

1 Within the range of 7.5 to 10.0 at all times.

(j) *Alkaline cleaning spent baths.*

SUBPART H—BPT

Pollutant or pollutant property	Maximum for any 1 day	Maximum for monthly average
	mg/off-kg (pounds per million off-pounds) of zinc alkaline cleaned	
Chromium	0.002	0.0007
Copper	0.007	0.004
Cyanide	0.001	0.0004
Zinc	0.005	0.002
Oil and grease	0.071	0.043
TSS	0.146	0.069
pH	(1)	(1)

1 Within the range of 7.5 to 10.0 at all times.

(k) *Alkaline cleaning rinse.*

SUBPART H—BPT

Pollutant or pollutant property	Maximum for any 1 day	Maximum for monthly average
	mg/off-kg (pounds per million off-pounds) of zinc alkaline cleaned	
Chromium	0.744	0.304
Copper	3.21	1.69
Cyanide	0.490	0.203
Zinc	2.47	1.03
Oil and grease	33.8	20.3
TSS	69.3	33.0
pH	(1)	(1)

1 Within the range of 7.5 to 10.0 at all times.

(l) *Sawing or grinding spent emulsions.*

SUBPART H—BPT

Pollutant or pollutant property	Maximum for any 1 day	Maximum for monthly average
	mg/off-kg (pounds per million off-pounds) of zinc sawed or ground with emulsions	
Chromium	0.011	0.005
Copper	0.045	0.024
Cyanide	0.007	0.003
Zinc	0.035	0.015
Oil and grease	0.476	0.286
TSS	0.976	0.464
pH	(1)	(1)

1 Within the range of 7.5 to 10.0 at all times.

(m) *Electrocoating rinse.*

SUBPART H—BPT

Pollutant or pollutant property	Maximum for any 1 day	Maximum for monthly average
	mg/off-kg (pounds per million off-pounds) of zinc electrocoated	
Chromium	1.01	0.412
Copper	4.35	2.29
Cyanide	0.664	0.275
Zinc	3.35	1.40
Oil and grease	45.8	27.5
TSS	93.9	44.7
pH	(1)	(1)

1 Within the range of 7.5 to 10.0 at all times.

(n) *Degreasing spent solvents—Subpart H—BPT.* There shall be no discharge of process wastewater pollutants.

[50 FR 34270, Aug. 23, 1985; 51 FR 2888, Jan. 22, 1986]

§ 471.82 Effluent limitations representing the degree of effluent reduction attainable by the application of the best available technology economically achievable (BAT).

Except as provided in 40 CFR 125.30 through 125.32, any existing point source subject to this subpart must achieve the following effluent limitations representing the degree of effluent reduction attainable by the application of the best available technology economically achievable (BAT):

(a) *Rolling spent neat oils—Subpart H—BAT.* There shall be no discharge of process wastewater pollutants.

(b) *Rolling spent emulsions.*

SUBPART H—BAT

Pollutant or pollutant property	Maximum for any 1 day	Maximum for monthly average
	mg/off-kg (pounds per million off-pounds) of zinc rolled with emulsions	
Chromium	0.0005	0.0002
Copper	0.002	0.0009
Cyanide	0.0003	0.0001
Zinc	0.002	0.0006

(c) *Rolling contact cooling water.*

SUBPART H—BAT

Pollutant or pollutant property	Maximum for any 1 day	Maximum for monthly average
	mg/off-kg (pounds per million off-pounds) of zinc rolled with contact cooling water	
Chromium	0.020	0.009
Copper	0.069	0.033
Cyanide	0.011	0.004
Zinc	0.055	0.023

(d) *Drawing spent emulsions.*

SUBPART H—BAT

Pollutant or pollutant property	Maximum for any 1 day	Maximum for monthly average
	mg/off-kg (pounds per million off-pounds) of zinc drawn with emulsions	
Chromium	0.002	0.0009
Copper	0.008	0.004
Cyanide	0.001	0.0005
Zinc	0.006	0.003

(e) *Direct chill casting contact cooling water.*

SUBPART H—BAT

Pollutant or pollutant property	Maximum for any 1 day	Maximum for monthly average
	mg/off-kg (pounds per million off-pounds) of zinc cast by the direct chill method	
Chromium	0.019	0.008
Copper	0.065	0.031
Cyanide	0.010	0.004
Zinc	0.052	0.021

(f) *Stationary casting contact cooling water—Subpart H—BAT.* There shall be no discharge of process wastewater pollutants.

(g) *Heat treatment contact cooling water.*

SUBPART H—BAT

Pollutant or pollutant property	Maximum for any 1 day	Maximum for monthly average
	mg/off-kg (pounds per million off-pounds) of zinc heat treated	
Chromium	0.029	0.012
Copper	0.098	0.047
Cyanide	0.016	0.006
Zinc	0.078	0.032

(h) *Surface treatment spent baths.*

SUBPART H—BAT

Pollutant or pollutant property	Maximum for any 1 day	Maximum for monthly average
	mg/off-kg (pounds per million off-pounds) of zinc surface treated	
Chromium	0.033	0.014
Copper	0.114	0.054
Cyanide	0.018	0.007
Zinc	0.091	0.038

(i) *Surface treatment rinse.*

SUBPART H—BAT

Pollutant or pollutant property	Maximum for any 1 day	Maximum for monthly average
	mg/off-kg (pounds per million off-pounds) of zinc surface treated	
Chromium	0.133	0.054
Copper	0.457	0.219
Cyanide	0.072	0.029
Zinc	0.365	0.151

(j) *Alkaline cleaning spent baths.*

SUBPART H—BAT

Pollutant or pollutant property	Maximum for any 1 day	Maximum for monthly average
	mg/off-kg (pounds per million off-pounds) of zinc alkaline cleaned	
Chromium	0.002	0.0006
Copper	0.005	0.002
Cyanide	0.0007	0.0003
Zinc	0.004	0.002

(k) *Alkaline cleaning rinse.*

SUBPART H—BAT

Pollutant or pollutant property	Maximum for any 1 day	Maximum for monthly average
	mg/off-kg (pounds per million off-pounds) of zinc alkaline cleaned	
Chromium	0.626	0.254
Copper	2.17	1.03
Cyanide	0.338	0.135
Zinc	1.73	0.710

(l) *Sawing or grinding spent emulsions.*

SUBPART H—BAT

Pollutant or pollutant property	Maximum for any 1 day	Maximum for monthly average
	mg/off-kg (pounds per million off-pounds) of zinc sawed or ground with emulsions	
Chromium	0.009	0.004
Copper	0.031	0.015
Cyanide	0.005	0.002
Zinc	0.025	0.010

(m) *Electrocoating rinse.*

SUBPART H—BAT

Pollutant or pollutant property	Maximum for any 1 day	Maximum for monthly average
	mg/off-kg (pounds per million off-pounds) of zinc electrocoated	
Chromium	0.085	0.035
Copper	0.293	0.140
Cyanide	0.046	0.019
Zinc	0.234	0.096

(n) *Degreasing spent solvents—Subpart H—BAT.* There shall be no discharge or process wastewater pollutants.

[50 FR 34270, Aug. 23, 1985; 51 FR 2888, Jan. 22, 1986]

§ 471.83 New source performance standards (NSPS).

Any new source subject to this subpart must achieve the following new source performance standards (NSPS):

(a) *Rolling spent neat oils—Subpart H—NSPS.* There shall be no discharge of process wastewater pollutants.

(b) *Rolling spent emulsions.*

SUBPART H—NSPS

Pollutant or pollutant property	Maximum for any 1 day	Maximum for monthly average
	mg/off-kg (pounds per million off-pounds) of zinc rolled with emulsions	
Chromium	0.0005	0.0002
Copper	0.002	0.0009
Cyanide	0.0003	0.0001
Zinc	0.002	0.0006
Oil and grease	0.014	0.014
TSS	0.021	0.017
pH	(1)	(1)

[1] Within the range of 7.5 to 10.0 at all times.

(c) *Rolling contact cooling water.*

SUBPART H—NSPS

Pollutant or pollutant property	Maximum for any 1 day	Maximum for monthly average
	mg/off-kg (pounds per million off-pounds) of zinc rolled with contact cooling water	
Chromium	0.020	0.009
Copper	0.069	0.037
Cyanide	0.011	0.004
Zinc	0.055	0.023
Oil and grease	0.536	0.536
TSS	0.804	0.643
pH	(1)	(1)

[1] Within the range of 7.5 to 10.0 at all times.

(d) *Drawing spent emulsions.*

SUBPART H—NSPS

Pollutant or pollutant property	Maximum for any 1 day	Maximum for monthly average
	mg/off-kg (pounds per million off-pounds) of zinc drawn with emulsions	
Chromium	0.002	0.0009
Copper	0.008	0.004
Cyanide	0.001	0.0005
Zinc	0.006	0.003
Oil and grease	0.058	0.058
TSS	0.087	0.070
pH	(1)	(1)

[1] Within the range of 7.5 to 10.0 at all times

(e) *Direct chill casting contact cooling water.*

SUBPART H—NSPS

Pollutant or pollutant property	Maximum for any one day	Maximum for monthly average
	mg/off-kg (pounds per million off-pounds) of zinc cast by the direct chill method	
Chromium	0.019	0.008
Copper	0.065	0.031
Cyanide	0.010	0.004
Zinc	0.052	0.021
Oil and grease	0.505	0.505
TSS	0.758	0.606
pH	(1)	(1)

[1] Within the range of 7.5 to 10.0 at all times.

(f) *Stationary casting contact cooling water—Subpart H—NSPS.* There shall be no discharge of process wastewater pollutants.

(g) *Heat treatment contact cooling water.*

SUBPART H—NSPS

Pollutant or pollutant property	Maximum for any 1 day	Maximum for monthly average
	mg/off-kg (pounds per million off-pounds) of zinc heat treated	
Chromium	0.029	0.012
Copper	0.098	0.047
Cyanide	0.016	0.006
Zinc	0.078	0.032
Oil and grease	0.763	0.763
TSS	1.15	0.916
pH	(1)	(1)

[1] Within the range of 7.5 to 10.0 at all times.

(h) *Surface treatment spent baths.*

SUBPART H—NSPS

Pollutant or pollutant property	Maximum for any 1 day	Maximum for monthly average
	mg/off-kg (pounds per million off-pounds) of zinc surface treated	
Chromium	0.033	0.014
Copper	0.114	0.054
Cyanide	0.018	0.007
Zinc	0.091	0.038
Oil and grease	0.887	0.887
TSS	1.33	1.07
pH	(1)	(1)

[1] Within the range of 7.5 to 10.0 at all times.

(i) *Surface treatment rinse.*

SUBPART H—NSPS

Pollutant or pollutant property	Maximum for any 1 day	Maximum for monthly average
	mg/off-kg (pounds per million off-pounds) of zinc surface treated	
Chromium	0.133	0.054
Copper	0.459	0.219
Cyanide	0.072	0.029
Zinc	0.365	0.151
Oil and grease	3.58	3.58
TSS	5.37	4.30
pH	(1)	(1)

[1] Within the range of 7.5 to 10.0 at all times.

(j) *Alkaline cleaning spent baths.*

SUBPART H—NSPS

Pollutant or pollutant property	Maximum for any 1 day	Maximum for monthly average
	mg/off-kg (pounds per million off-pounds) of zinc alkaline cleaned	
Chromium	0.002	0.0006
Copper	0.005	0.002
Cyanide	0.0007	0.0003
Zinc	0.004	0.002
Oil and grease	0.036	0.036
TSS	0.054	0.043
pH	(1)	(1)

[1] Within the range of 7.5 to 10.0 at all times.

(k) *Alkaline cleaning rinse.*

SUBPART H—NSPS

Pollutant or pollutant property	Maximum for any 1 day	Maximum for monthly average
	mg/off-kg (pounds per million off-pounds) of zinc alkaline cleaned	
Chromium	0.626	0.259
Copper	2.17	1.03
Cyanide	0.338	0.135
Zinc	1.73	0.710
Oil and grease	16.9	16.9
TSS	25.4	20.3
pH	(1)	(1)

[1] Within the range of 7.5 to 10.0 at all times.

(l) *Sawing or grinding spent emulsions.*

SUBPART H—NSPS

Pollutant or pollutant property	Maximum for any 1 day	Maximum for monthly average
	mg/off-kg (pounds per million off-pounds) of zinc sawed or ground with emulsions	
Chromium	0.009	0.004
Copper	0.031	0.015
Cyanide	0.005	0.002
Zinc	0.025	0.010
Oil and grease	0.235	0.235
TSS	0.357	0.286
pH	(1)	(1)

[1]Within the range of 7.5 to 10.0 at all times.

(m) *Electrocoating rinse.*

SUBPART H—NSPS

Pollutant or pollutant property	Maximum for any 1 day	Maximum for monthly average
	mg/off-kg (pounds per million off-pounds) of zinc electrocoated	
Chromium	0.085	0.035
Copper	0.293	0.140
Cyanide	0.046	0.019
Zinc	0.234	0.096
Oil and grease	2.29	2.29
TSS	3.44	2.75
pH	(1)	(1)

[1] Within the range of 7.5 to 10.0 at all times

(n) *Degreasing spent solvents—Subpart H—NSPS.* There shall be no discharge of process wastewater pollutants.

[50 FR 34270, Aug. 23, 1985; 51 FR 2888, Jan. 22, 1986]

§ 471.84 Pretreatment standards for existing sources (PSES). [Reserved]

§ 471.85 Pretreatment standards for new sources (PSNS).

Except as provided in 40 CFR 403.7, any new source subject to this subpart which introduces pollutants into a publicly owned treatment works must comply with 40 CFR part 403 and achieve the following pretreatment standards for new sources (PSNS). The mass of the wastewater introduced into a POTW shall not exceed the following values:

(a) *Rolling spent neat oils—Subpart H—PSNS.* There shall be no discharge of process wastewater pollutants.

(b) *Rolling spent emulsions.*

SUBPART H—PSNS

Pollutant or pollutant property	Maximum for any 1 day	Maximum for monthly average
	mg/off-kg (pounds per million off-pounds) of zinc rolled with emulsions	
Chromium	0.0005	0.0002
Copper	0.002	0.0009
Cyanide	0.0003	0.0001
Zinc	0.002	0.0006

(c) *Rolling contact cooling water.*

SUBPART H—PSNS

Pollutant or pollutant property	Maximum for any 1 day	Maximum for monthly average
	mg/off-kg (pounds per million off-pounds) of zinc rolled with contact cooling water	
Chromium	0.020	0.008
Copper	0.069	0.033
Cyanide	0.011	0.004
Zinc	0.055	0.023

(d) *Drawing spent emulsions.*

SUBPART H—PSNS

Pollutant or pollutant property	Maximum for any 1 day	Maximum for monthly average
	mg/off-kg (pounds per million off-pounds) of zinc drawn with emulsions	
Chromium	0.002	0.0009
Copper	0.008	0.004
Cyanide	0.001	0.0005
Zinc	0.006	0.003

(e) *Direct chill casting contact cooling water.*

SUBPART H—PSNS

Pollutant or pollutant property	Maximum for any 1 day	Maximum for monthly average
	mg/off-kg (pounds per million off-pounds) of zinc cast by the direct chill method	
Chromium	0.019	0.008
Copper	0.065	0.031
Cyanide	0.010	0.004
Zinc	0.052	0.021

(f) *Stationary casting contact cooling water—Subpart H—PSNS.* There shall be

no discharge of process wastewater pollutants.

(g) *Heat treatment contact cooling water.*

SUBPART H—PSNS

Pollutant or pollutant property	Maximum for any 1 day	Maximum for monthly average
	mg/off-kg (pounds per million off-pounds) of zinc heat treated	
Chromium	0.029	0.012
Copper	0.098	0.047
Cyanide	0.016	0.006
Zinc	0.078	0.032

(h) *Surface treatment spent baths.*

SUBPART H—PSNS

Pollutant or pollutant property	Maximum for any 1 day	Maximum for monthly average
	mg/off-kg (pounds per million off-pounds) of zinc surface treated	
Chromium	0.033	0.014
Copper	0.114	0.054
Cyanide	0.018	0.007
Zinc	0.091	0.038

(i) *Surface treatment rinse.*

SUBPART H—PSNS

Pollutant or pollutant property	Maximum for any 1 day	Maximum for monthly average
	mg/off-kg (pounds per million off-pounds) of zinc surface treated	
Chromium	0.133	0.054
Copper	0.459	0.219
Cyanide	0.072	0.029
Zinc	0.365	0.151

(j) *Alkaline cleaning spent baths.*

SUBPART H—PSNS

Pollutant or pollutant property	Maximum for any 1 day	Maximum for monthly average
	mg/off-kg (pounds per million off-pounds) of zinc alkaline cleaned	
Chromium	0.002	0.0006
Copper	0.005	0.002
Cyanide	0.0007	0.0003
Zinc	0.004	0.002

(k) *Alkaline cleaning rinse.*

SUBPART H—PSNS

Pollutant or pollutant property	Maximum for any 1 day	Maximum for monthly average
	mg/off-kg (pounds per million off-pounds) of zinc alkaline cleaned	
Chromium	0.626	0.254
Copper	2.17	1.03
Cyanide	0.338	0.134
Zinc	1.73	0.710

(l) *Sawing or grinding spent emulsions.*

SUBPART H—PSNS

Pollutant or pollutant property	Maximum for any 1 day	Maximum for monthly average
	mg/off-kg (pounds per million off-pounds) of zinc sawed or ground with emulsions	
Chromium	0.009	0.004
Copper	0.031	0.015
Cyanide	0.005	0.002
Zinc	0.025	0.010

(m) *Electrocoating rinse.*

SUBPART H—PSNS

Pollutant or pollutant property	Maximum for any 1 day	Maximum for monthly average
	mg/off-kg (pounds per million off-pounds) of zinc electrocoated	
Chromium	0.085	0.035
Copper	0.293	0.140
Cyanide	0.046	0.019
Zinc	0.234	0.096

(n) *Decreasing spent solvents— Subpart H—PSNS.* There shall be no discharge of process wastewater pollutants.

[50 FR 34270, Aug. 23, 1985; 51 FR 2888, Jan. 22, 1986]

§ 471.86 Effluent limitations representing the degree of effluent reduction attainable by the application of the best conventional pollutant control technology (BCT). [Reserved]

Subpart I—Zirconium-Hafnium Forming Subcategory

§ 471.90 Applicability; description of the zirconium-hafnium forming subcategory.

This subpart applies to discharges of pollutants to waters of the United States, and introductions of pollutants into publicly owned treatment works from the process operations of the zirconium-hafnium forming subcategory.

§ 471.91 Effluent limitations representing the degree of effluent reduction attainable by the application of the best practicable control technology currently available (BPT).

Except as provided in 40 CFR 125.30 through 125.32, any existing point source subject to this subpart must achieve the following effluent limitations for the process operations representing the degree of effluent reduction attainable by the application of the best practicable control technology currently available (BPT):

(a) *Rolling spent neat oils—Subpart I—BPT*. There shall be no discharge of process wastewater pollutants.

(b) *Drawing spent lubricants—Subpart I—BPT*. There shall be no discharge of process wastewater pollutants.

(c) *Extrusion spend emulsions—Subpart I—BPT*. There shall be no discharge of process wastewater pollutants.

(d) *Extrusion press hydraulic fluid leakage*.

SUBPART I—BPT

Pollutant or pollutant property	Maximum for any 1 day	Maximum for monthly average
	mg/off-kg (pounds per million off-pounds) of zirconium-hafnium extruded	
Chromium	0.104	0.043
Cyanide	0.069	0.029
Nickel	0.455	0.301
Ammonia	31.6	13.9
Fluoride	14.1	6.26
Oil and grease	4.74	2.85
TSS	9.72	4.62
pH	(1)	(1)

[1] Within the range of 7.5 to 10.0 at all times.

(e) *Swaging spent neat oils—Subpart I—BPT*. There shall be no discharge of process wastewater pollutants.

(f) *Heat treatment contact cooling water*.

SUBPART I—BPT

Pollutant or pollutant property	Maximum for any 1 day	Maximum for monthly average
	mg/off-kg (pounds per million off-pounds) of zirconium-hafnium heat treated	
Chromium	0.151	0.062
Cyanide	0.100	0.041
Nickel	0.659	0.436
Ammonia	45.7	20.1
Fluoride	20.4	9.06
Oil and grease	6.86	4.12
TSS	14.1	6.69
pH	(1)	(1)

[1] Within the range of 7.5 to 10.0 at all times.

(g) *Tube Reducing Spent Lubricant—Subpart I—BPT*.

(1) There shall be no discharge of process wastewater pollutants except as provided under paragraph (g)(2) of this section.

(2) Process wastewater pollutants may be discharged, with no allowance for any pollutants discharged, provided the facility owner or operator demonstrates, on the basis of analytical methods set forth in or approved pursuant to 40 CFR part 136, that the concentrations of nitrosamine compounds in the wastewater discharged from the tube reducing process do not exceed 0.050 mg/l of N-nitrosodimethylamine, 0.020 mg/l of N-nitrosodiphenylamine, and 0.020 mg/l of N-nitrosodi-n-propylamine.

(3) The demonstration required under subparagraph (g)(2) of this section shall be made once per month until the demonstration has been made for all three nitrosamine compounds for six consecutive months, after which time the demonstration may be made once per quarter. If a sample is found to contain any of the foregoing nitrosamine compounds at concentrations greater than those specified in subparagraph (g)(2) of this section, the actions described in paragraph (g)(4), of this section shall be taken, and the demonstration required under paragraph (g)(2) of this section shall be made once per month until it has been made for all three nitrosamine compounds for six consecutive months.

(4) If sampling results show that any of the foregoing nitrosamine compounds is present in the process wastewater at concentrations greater than those specified in subparagraph (g)(2) of this section, the facility owner or operator shall ensure that, within thirty days of receiving written notification of the sampling results, there is no further discharge of tube reducing spent lubricant wastewater until the owner or operator:

(i) Performs a subsequent analysis which demonstrates that the concentrations of the foregoing nitrosamine compounds do not exceed the levels specified in paragraph (g)(2) of this section; or

(ii) Substitutes a new tube reducing lubricant and thereafter complies with the requirements of paragraph (g)(3) of this section; or

(iii) Determines the source of the pollutant whose concentration exceeded the level specified in paragraph (g)(2) of this section and demonstrates to the satisfaction of the NPDES issuing authority that such source has been eliminated.

(5) The concentration limits specified in paragraph (g)(2) of this section apply at the point of discharge from the tube reducing process. However, sampling after the tube reducing wastewater has been commingled with other wastewaters is permitted if:

(i) Any dilution caused by the other wastewaters is taken into account in determining the appropriate (i.e., lower) allowable discharge concentration; and

(ii) An analytical method of sufficient sensitivity is used to measure the levels of each of the foregoing nitrosamine compounds in the wastewaters being sampled.

(h) *Surface treatment spent baths.*

SUBPART I—BPT

Pollutant or pollutant property	Maximum for any 1 day	Maximum for monthly average
	mg/off-kg (pounds per million off-pounds) of zirconium-hafnium surface treated	
Chromium	0.150	0.61
Cyanide	0.099	0.041
Nickel	0.653	0.432
Ammonia	45.3	20
Fluoride	20.3	8.98
Oil and grease	6.80	4.08
TSS	14	6.63
pH	(1)	(1)

1 Within the range of 7.5 to 10.0 at all times.

(i) *Surface treatment rinse.*

SUBPART I—BPT

Pollutant or pollutant property	Maximum for any 1 day	Maximum for monthly average
	mg/off-kg (pounds per million off-pounds) of zirkonium-hafnium surface treated	
Chromium	3.91	1.60
Cyanide	2.58	1.07
Nickel	17.1	11.3
Ammonia	1,190	521
Fluoride	529	235
Oil and grease	178	107
TSS	364	173
pH	(1)	(1)

1 Within the range of 7.5 to 10.0 at all times.

(j) *Alkaline cleaning spent baths.*

SUBPART I—BPT

Pollutant or pollutant property	Maximum for any 1 day	Maximum for monthly average
	mg/off-kg (pounds per million off-pounds) of zirconium-hafnium alkaline cleaned	
Chromium	0.704	0.288
Cyanide	0.464	0.192
Nickel	3.07	2.03
Ammonia	214	93.8
Fluoride	95.2	42.3
Oil and grease	32	19.2
TSS	65.6	31.2
pH	(1)	(1)

[1] Within the range of 7.5 to 10.0 at all times.

(k) *Alkaline cleaning rinse.*

SUBPART I—BPT

Pollutant or pollutant property	Maximum for any 1 day	Maximum for monthly average
	mg/off-kg (pounds per million off-pounds) of zirconium-hafnium alkaline cleaned	
Chromium	13.8	5.65
Cyanide	9.11	3.77
Nickel	60.3	39.9
Ammonia	4,190	1,840
Fluoride	1,870	829
Oil and grease	628	377
TSS	1,290	613
pH	(1)	(1)

[1] Within the range of 7.5 to 10.0 at all times.

(l) *Sawing or grinding spent emulsions.*

SUBPART I—BPT

Pollutant or pollutant property	Maximum for any 1 day	Maximum for monthly average
	mg/off-kg (pounds per million off-pounds) of zirconium-hafnium sawed or ground with emulsions	
Chromium	0.124	0.051
Cyanide	0.082	0.034
Nickel	0.540	0.357
Ammonia	37.5	16.5
Fluoride	16.7	7.42
Oil and grease	5.62	3.37
TSS	11.5	5.48
pH	(1)	(1)

[1] Within the range of 7.5 to 10.0 at all times.

(m) *Wet air pollution control scrubber blowdown—Subpart I—BPT.* There shall be no allowance for the discharge of process wastewater pollutants.

(n) *Degreasing spent solvents—Subpart I—BPT.* There shall be no discharge of process wastewater pollutants.

(o) *Degreasing rinse—Subpart I—BPT.* There shall be no discharge or process wastewater pollutants.

(p) *Molten salt rinse.*

SUBPART I—BPT

Pollutant or pollutant property	Maximum for any 1 day	Maximum for monthy average
	mg/off-kg (pounds per million off pounds) of zirconium-hafnium treated with molten salt	
Chromium	3.33	1.360
Cyanide	2.20	0.907
Nickel	14.5	9.60
Ammonia	1,010	443
Fluoride	450	200
Oil and grease	151	90.7
TSS	310	148
pH	(1)	(1)

[1] Within the range of 7.5 to 10.0 at all times.

(q) *Sawing or grinding contact cooling water.*

SUBPART I—BPT

Pollutant or pollutant property	Maximum for any 1 day	Maximum for monthly average
	mg/off-kg (pounds per million off-pounds) of zirconium-hafnium sawed or ground with contact cooling water	
Chromium	0.142	0.058
Cyanide	0.093	0.039
Nickel	0.617	0.408
Ammonia	42.8	18.8
Fluoride	19.1	8.48
Oil and grease	6.42	3.85
TSS	13.2	6.26
pH	(1)	(1)

[1] Within the range of 7.5 to 10.0 at all times.

(r) *Sawing on grinding rinse.*

SUBPART I—BPT

Pollutant or pollutant property	Maximum for any 1 day	Maximum for monthly average
	mg/off-kg (pounds per million off-pounds) of sawed or ground zirconium hafnium rinsed	
Chromium	0.792	0.324
Cyanide	0.522	0.216
Nickel	3.46	2.29
Ammonia	240	106
Fluoride	107	47.5
Oil and grease	36	21.6
TSS	73.8	35.1
pH	(1)	(1)

[1] Within the range of 7.5 to 10.0 at all times.

(s) *Sawing or grinding spent neat oils—Subpart I—BPT*. There shall be no discharge of process wastewater pollutants.

(t) *Inspection and testing wastewater*.

SUBPART I—BPT

Pollutant or pollutant property	Maximum for any 1 day	Maximum for monthly average
	mg/off-kg (pounds per million off-pounds) of zirconium-hafnium tested	
Chromium	0.007	0.003
Cyanide	0.005	0.002
Nickel	0.030	0.020
Ammonia	2.06	0.903
Fluoride	0.917	0.407
Oil and grease	0.308	0.185
TSS	0.632	0.301
pH	(1)	(1)

[1] Within the range of 7.05 to 10.0 at all times.

[50 FR 34270, Aug. 23, 1985; 51 FR 2888, Jan. 22, 1986, as amended at 54 FR 11350, Mar. 17, 1989]

§ 471.92 Effluent limitations representing the degree of effluent reduction attainable by the application of the best available technology economically achievable (BAT).

Except as provided in 40 CFR 125.30 through 125.32, any existing point source subject to this subpart must achieve the following effluent limitations representing the degree of effluent reduction attainable by the application of the best available technology economically achievable (BAT):

(a) *Rolling spent neat oils—Subpart I—BAT*. There shall be no discharge of process wastewater pollutants.

(b) *Drawing spent lubricants—Subpart I—BAT*. There shall be no discharge of process wastewater pollutants.

(c) *Extrusion spent emulsions—Subpart I—BAT*. There shall be no discharge of process wastewater pollutants.

(d) *Extrusion press hydraulic fluid leakage*.

SUBPART I—BAT

Pollutant or pollutant property	Maximum for any 1 day	Maximum for monthly average
	mg/off-kg (pounds per million off-pounds of zirconium-hafnium extruded	
Chromium	0.104	0.043
Cyanide	0.069	0.029
Nickel	0.455	0.301
Ammonia	31.6	13.9
Fluoride	14.1	6.26

(e) *Swaging spent neat oils*.—There shall be no discharge of process wastewater pollutants.

(f) *Heat treatment contact cooling water*.

SUBPART I—BAT

Pollutant or pollutant property	Maximum for any 1 day	Maximum for monthly average
	mg/off-kg (pounds per million off-pounds) of zirconium-hafnium heat treated	
Chromium	0.015	0.006
Cyanide	0.010	0.004
Nickel	0.066	0.044
Ammonia	4.57	2.01
Fluoride	2.04	0.906

(g) *Tube Reducing Spent Lubricant*—Subpart I—BAT.

(1) There shall be no discharge of process wastewater pollutants except as provided under paragraph (g)(2) of this section.

(2) Process wastewater pollutants may be discharged, with no allowance for any pollutants discharged, provided the facility owner or operator demonstrates, on the basis of analytical methods set forth in or approved pursuant to 40 CFR part 136, that the concentrations of nitrosamine compounds in the wastewater discharged from the tube reducing process do not exceed 0.050 mg/l of N-nitrosodimethylamine, 0.020 mg/l of N-nitrosodiphenylamine,

and 0.020 mg/l of N-nitrosodi-n-propylamine.

(3) The demonstration required under paragraph (g)(2) of this section shall be made once per month until the demonstration has been made for all three nitrosamine compounds for six consecutive months, after which time the demonstration may be made once per quarter. If a sample is found to contain any of the foregoing nitrosamine compounds at concentrations greater than those specified in paragraph (g)(2) of this section, the actions described in paragraph (g)(4) of this section shall be taken, and the demonstration required under paragraph (g)(2) of this section shall be made once per month until it has been made for all three nitrosamine compounds for six consecutive months.

(4) If sampling results show that any of the foregoing nitrosamine compounds is present in the process wastewater at concentrations greater than those specified in paragraph (g)(2) of this section, the facility owner or operator shall ensure that, within thirty days of receiving written notification of the sampling results, there is no further discharge of tube reducing spent lubricant wastewater until the owner or operator:

(i) Performs a subsequent analysis which demonstrates that the concentrations of the foregoing nitrosamine compounds do not exceed the levels specified in paragraph (g)(2) of this section; or

(ii) Substitutes a new tube reducing lubricant and thereafter complies with the requirements of paragraph (g)(3) of this section; or

(iii) Determines the source of the pollutant whose concentration exceeded the level specified in paragraph (g)(2) of this section and demonstrates to the satisfaction of the NPDES issuing authority that such source has been eliminated.

(5) The concentration limits specified in paragraph (g)(2) of this section apply at the point of discharge from the tube reducing process. However, sampling after the tube reducing wastewater has been commingled with other wastewaters is permitted if:

(i) Any dilution caused by the other wastewaters is taken into account in determining the appropriate (i.e., lower) allowable discharge concentration; and

(ii) An analytical method of sufficient sensitivity is used to measure the levels of each of the foregoing nitrosamine compounds in the wastewaters being sampled.

(h) *Surface treatment spent baths.*

SUBPART I—BAT

Pollutant or pollutant property	Maximum for any 1 day	Maximum for monthly average
	mg/off-kg (pounds per million off-pounds) of zirconium-hafnium surface treated	
Chromium	0.150	0.061
Cyanide	0.099	0.041
Nickel	0.653	0.432
Ammonia	45.3	20
Fluoride	20.3	8.98

(i) *Surface treatment rinse.*

SUBPART I—BAT

Pollutant or pollutant property	Maximum for any 1 day	Maximum for monthly average
	mg/off-kg (pounds per million off-pounds) of zirconium-hafnium surface treated	
Chromium	0.391	0.160
Cyanide	0.258	0.107
Nickel	1.71	1.13
Ammonia	119	52.1
Fluoride	52.9	23.5

(j) *Alkaline cleaning spent baths.*

SUBPART I—BAT

Pollutant or pollutant property	Maximum for any 1 day	Maximum for monthly average
	mg/off-kg (pounds per million off-pounds) of zirconium-hafnium alkaline cleaned	
Chromium	0.704	0.288
Cyanide	0.464	0.192
Nickel	3.07	2.03
Ammonia	214	93.8
Fluoride	95.2	42.3

(k) *Alkaline cleaning rinse.*

SUBPART I—BAT

Pollutant or pollutant property	Maximum for any 1 day	Maximum for monthly average
	mg/off-kg (pounds per million off-pounds) of zirconium-hafnium alkaline cleaned	
Chromium	1.380	0.565
Cyanide	0.911	0.377
Nickel	6.03	3.99
Ammonia	419	184
Fluoride	187	82.9

(l) *Sawing or grinding spent emulsions.*

SUBPART I—BAT

Pollutant or pollutant property	Maximum for any 1 day	Maximum for monthly average
	mg/off-kg (pounds per million off-pounds) of zirconium-hafnium sawed or ground with emulsions	
Chromium	0.124	0.051
Cyanide	0.082	0.034
Nickel	0.540	0.357
Ammonia	37.5	16.5
Fluoride	16.7	7.42

(m) *Wet air pollution control scrubber blowdown—Subpart I—BAT.* There shall be no allowance for the discharge of process wastewater pollutants.

(n) *Degreasing spent solvents—Subpart I—BAT.* There shall be no discharge of process wastewater pollutants.

(o) *Degreasing rinse—Subpart I—BAT.* There shall be no discharge of process wastewater pollutants.

(p) *Molten salt rinse.*

SUBPART I—BAT

Pollutant or pollutant property	Maximum for any 1 day	Maximum for monthly average
	mg/off-kg (pounds per million off-pounds) of zirconium-hafnium treated with molten salt	
Chromium	0.333	0.136
Cyanide	0.220	0.091
Nickel	1.45	0.960
Ammonia	101	44.3
Fluoride	45.0	20.0

(q) *Sawing or grinding contact cooling water.*

SUBPART I—BAT

Pollutant or pollutant property	Maximum for any 1 day	Maximum for monthly average
	mg/off-kg (pounds per million off-pounds) of zirconium-hafnium sawed or ground with contact cooling water	
Chromium	0.142	0.058
Cyanide	0.093	0.039
Nickel	0.617	0.408
Ammonia	42.8	18.8
Fluoride	19.1	8.48

(r) *Sawing or grinding rinse.*

SUBPART I—BAT

Pollutant or pollutant property	Maximum for any 1 day	Maximum for monthly average
	mg/off-kg (pounds per million off-pounds) of sawed or ground zirconium-hafnium rinsed	
Chromium	0.079	0.033
Cyanide	0.052	0.022
Nickel	0.346	0.229
Ammonia	24.0	10.6
Fluoride	10.7	4.75

(s) *Sawing or grinding spent neat oils—Subpart I—BAT.* There shall be no discharge of process wastewater pollutants.

(t) *Inspection and testing wastewater.*

SUBPART I—BAT

Pollutant or pollutant property	Maximum for any 1 day	Maximum for monthly average
	mg/off-kg (pounds per million off-pounds) of zirconium-hafnium tested	
Chromium	0.007	0.003
Cyanide	0.005	0.002
Nickel	0.030	0.020
Ammonia	2.06	0.903
Fluoride	0.917	0.407

[50 FR 34270, Aug. 23, 1985; 51 FR 2888, Jan. 22, 1986, as amended at 54 FR 11351, Mar. 17, 1989]

§ 471.93 New source performance standards (NSPS).

Any new source subject to this subpart must achieve the following new source performance standards (NSPS). The mass of pollutant in the zirconium-hafnium process wastewater shall not exceed the following values:

(a) *Rolling spent neat oils—Subpart I—NSPS.* There shall be no discharge of process wastewater pollutants.

(b) *Drawing spent lubricants—Subpart I—NSPS.* There shall be no discharge of process wastewater pollutants.

(c) *Extrusion spent emulsions—Subpart I—NSPS.* There shall be no discharge of process wastewater pollutants.

(d) *Extrusion press hydraulic fluid leakage.*

SUBPART I—NSPS

Pollutant or pollutant property	Maximum for any 1 day	Maximum for monthly average
	mg/off-kg (pounds per million off-pounds) of zirconium-hafnium extruded	
Chromium	0.104	0.043
Cyanide	0.069	0.029
Nickel	0.455	0.301
Ammonia	31.6	13.9
Fluoride	14.1	6.26
Oil and grease	4.74	2.85
TSS	9.72	4.62
pH	(1)	(1)

[1] Within the range of 7.5 to 10.0 at all times.

(e) *Swaging spent neat oils—Subpart I—NSPS.* There shall be no discharge of process wastewater pollutants.

(f) *Heat treatment contact cooling water.*

SUBPART I—NSPS

Pollutant or pollutant property	Maximum for any 1 day	Maximum for monthly average
	mg/off-kg (pounds per million off-pounds) of zirconium-hafnium heat treated	
Chromium	0.015	0.006
Cyanide	0.010	0.004
Nickel	0.066	0.044
Ammonia	4.57	2.01
Fluoride	2.04	0.906
Oil and grease	0.686	0.412
TSS	1.41	0.669
pH	(1)	(1)

[1] Within the range of 7.5 to 10.0 at all times.

(g) *Tube Reducing Spent Lubricant—Subpart I—NSPS:*

(1) There shall be no discharge of process wastewater pollutants except as provided under paragraph (g)(2) of this section.

(2) Process wastewater pollutants may be discharged, with no allowance for any pollutants discharged, provided the facility owner or operator demonstrates, on the basis of analytical methods set forth in or approved pursuant to 40 CFR part 136, that the concentrations of nitrosamine compounds in the wastewater discharged from the tube reducing process do not exceed 0.050 mg/l of N-nitrosodimethylamine, 0.020 mg/l of N-nitrosodiphenylamine, and 0.020 mg/l of N-nitrosodi-n-propylamine.

(3) The demonstration required under paragraph (g)(2) of this section shall be made once per month until the demonstration has been made for all three nitrosamine compounds for six consecutive months, after which time the demonstration may be made once per quarter. If a sample is found to contain any of the foregoing nitrosamine compounds at concentrations greater than those specified in paragraph (g)(2) of this section, the actions described in paragraph (g)(4) of this section shall be taken, and the demonstration required under paragraph (g)(2) of this section shall be made once per month until it has been made for all three nitrosamine compounds for six consecutive months.

(4) If sampling results show that any of the foregoing nitrosamine compounds is present in the process wastewater at concentrations greater than those specified in paragraph (g)(2) of this section, the facility owner or operator shall ensure that, within thirty days of receiving written notification of the sampling results, there is no further discharge of tube reducing spent lubricant wastewater until the owner or operator:

(i) Performs a subsequent analysis which demonstrates that the concentrations of the foregoing nitrosamine compounds do not exceed the levels specified in paragraph (g)(2) of this section; or

(ii) Substitutes a new tube reducing lubricant and thereafter complies with the requirements of paragraph (g)(3) of this section; or

(iii) Determines the source of the pollutant whose concentration exceeded the level specified in paragraph (g)(2) of this section and demonstrates to the satisfaction of the NPDES issuing authority that such source has been eliminated.

(5) The concentration limits specified in paragraph (g)(2) of this section apply at the point of discharge from the tube reducing process. However, sampling after the tube reducing wastewater has been commingled with other wastewaters is permitted if:

(i) Any dilution caused by the other wastewaters is taken into account in determining the appropriate (i.e., lower) allowable discharge concentration; and

(ii) An analytical method of sufficient sensitivity is used to measure the levels of each of the foregoing nitrosamine compounds in the wastewaters being sampled.

(h) *Surface treatment spent baths.*

SUBPART I—NSPS

Pollutant or pollutant property	Maximum for any 1 day	Maximum for monthly average
	mg/off-kg (pounds per million off-pounds) of zirconium-hafnium surface treated	
Chromium	0.150	0.061
Cyanide	0.099	0.041
Nickel	0.653	0.432
Ammonia	45.3	20.0
Fluoride	20.0	8.98
Oil and grease	6.80	4.08
TSS	14.0	6.63
pH	(1)	(1)

[1] Within the range of 7.5 to 10.0 at all times.

(i) *Surface treatment rinse.*

SUBPART I—NSPS

Pollutant or pollutant property	Maximum for any 1 day	Maximum for monthly average
	mg/off-kg (pounds per million off-pounds) of zirconium-hafnium surface treated	
Chromium	0.391	0.160
Cyanide	0.258	0.107
Nickel	1.71	1.13
Ammonia	119	52.1
Fluoride	52.9	23.5
Oil and grease	17.8	10.7
TSS	36.4	17.3
pH	(1)	(1)

[1] Within the range of 7.5 to 10.0 at all times.

(j) *Alkaline cleaning spent baths.*

SUBPART I—NSPS

Pollutant or pollutant property	Maximum for any 1 day	Maximum for monthly average
	mg/off-kg (pounds per million off-pounds) of zirconium-hafnium alkaline cleaned	
Chromium	0.704	0.288
Cyanide	0.464	0.192
Nickel	3.07	2.03
Ammonia	214	93.8
Fluoride	95.2	42.3
Oil and grease	32.0	19.2
TSS	65.6	31.2
pH	(1)	(1)

[1] Within the range of 7.5 to 10.0 at all times

(k) *Alkaline cleaning rinse.*

SUBPART I—NSPS

Pollutant or pollutant property	Maximum for any 1 day	Maximum for monthly average
	mg/off-kg (pounds per million off-pounds) of zirconium-hafnium alkaline cleaned	
Chromium	1.38	0.565
Cyanide	0.911	0.377
Nickel	6.03	3.99
Ammonia	419	184
Fluoride	187	82.9
Oil and grease	62.8	37.7
TSS	129	61.3
pH	(1)	(1)

[1] Within the range of 7.5 to 10.0 at all times.

(l) *Sawing or grinding spent emulsions.*

SUBPART I—NSPS

Pollutant or pollutant property	Maximum for any 1 day	Maximum for monthly average
	mg/off-kg (pounds per million off-pounds) of zirconium-hafnium sawed or ground with emulsions	
Chromium	0.124	0.051
Cyanide	0.082	0.034
Nickel	0.540	0.357
Ammonia	37.5	16.50
Fluoride	16.7	7.42
Oil and grease	5.62	3.37
TSS	11.5	5.48
pH	(1)	(1)

[1] Within the range of 7.5 to 10.0 at all times.

(m) *Wet air pollution control scrubber blowdown—Subpart I—NSPS.* There shall be no allowance for the discharge of process wastewater pollutants.

(n) *Degreasing spent solvents—Subpart I—NSPS.* There shall be no discharge of process wastewater pollutants.

(o) *Degreasing rinse—Subpart I—NSPS.* There shall be no discharge of process wastewater pollutants

(p) *Molten salt rinse.*

SUBPART I—NSPS

Pollutant or pollutant property	Maximum for any 1 day	Maximum for monthly average
	mg/off-kg (pounds per million off-pounds) of zirconium-hafnium treated with molten salt	
Chromium	0.333	0.136
Cyanide	0.220	0.091
Nickel	1.45	0.960
Ammonia	101	44.3
Fluoride	45.0	20.0
Oil and grease	15.1	9.07
TSS	31.0	14.8
pH	(1)	(1)

[1] Within the range of 7.5 to 10.0 at all times.

(q) *Sawing or grinding contact cooling water.*

SUBPART I—NSPS

Pollutant or pollutant property	Maximum for any 1 day	Maximum for monthly average
	mg/off-kg (pounds per million off-pounds) of zirconium-hafnium sawed or ground with contact cooling water	
Chromium	0.142	0.058
Cyanide	0.093	0.039
Nickel	0.617	0.408
Ammonia	42.8	18.8
Fluoride	19.1	8.48
Oil and grease	6.42	3.85
TSS	13.2	6.26
pH	(1)	(1)

[1] Within the range of 7.5 to 10.0 at all times.

(r) *Sawing or grinding rinse.*

SUBPART I—NSPS

Pollutant or pollutant property	Maximum for any 1 day	Maximum for monthly average
	mg/off-kg (pounds per million off-pounds) of sawed or ground zirconium-hafnium rinsed	
Chromium	0.079	0.033
Cyanide	0.052	0.022
Nickel	0.346	0.229
Ammonia	24.0	10.6
Fluoride	10.7	4.75
Oil and Grease	3.60	2.16
TSS	7.38	3.51
pH	(1)	(1)

[1] Within range of 7.5 to 10.0 at all times.

(s) *Sawing or grinding spent neat oils—Subpart I—NSPS.* There shall be no discharge or process wastewater pollutants.

(t) *Inspection and testing wastewater.*

SUBPART I—NSPS

Pollutant or pollutant property	Maximum for any 1 day	Maximum for monthly average
	mg/off-kg (pounds per million off-pounds) of zirconium-hafnium tested	
Chromium	0.007	0.003
Cyanide	0.005	0.002
Nickel	0.030	0.020
Ammonia	2.06	0.903
Fluoride	0.917	0.407
Oil and grease	0.308	0.185
TSS	0.632	0.301
pH	(1)	(1)

[1] Within the range of 7.5 to 10.0 at all times.

[50 FR 34270, Aug. 23, 1985; 51 FR 2888, Jan. 22, 1986, as amended at 54 FR 11351, Mar. 17, 1989]

§ 471.94 Pretreatment standards for existing sources (PSES).

Except as provided in 40 CFR 403.7 and 403.13, any existing source subject to this subpart which introduces pollutants into a publicly owned treatment works must comply with 40 CFR part 403 and by August 23, 1988 achieve the following preteatment standards for existing sources (PSES). The mass of wastewater pollutants in zirconium-hafnium forming process wastewater introduced into a POTW shall not exceed the following values:

(a) *Rolling spent neat oils—Subpart I—PSES.* There shall be no discharge of process wastewater pollutants.

(b) *Drawing spent lubricants—Subpart I—PSES.* There shall be no discharge of process wastewater pollutants.

(c) *Extrusion spent emulsion—Subpart I—PSES.* There shall be no discharge of process wastewater pollutants.

(d) *Extrusion press hydraulic fluid leakage.*

SUBPART I—PSES

Pollutant or pollutant property	Maximum for any 1 day	Maximum for monthly average
	mg/off-kg (pounds per million off-pounds) of zirconium-hafnium extruded	
Chromium	0.104	0.043
Cyanide	0.069	0.029
Nickel	0.455	0.301
Ammonia	31.6	13.9
Fluoride	14.1	6.26

(e) *Swaging spent neat oils—Subpart I—PSES.* There shall be no discharge of process wastewater pollutants.

(f) *Heat treatment contact cooling water.*

SUBPART I—PSES

Pollutant or pollutant property	Maximum for any 1 day	Maximum for monthly average
	mg/off-kg (pounds per million off-pounds) of zirconium-hafnium heat treated	
Chromium	0.015	0.006
Cyanide	0.010	0.004
Nickel	0.066	0.044
Ammonia	4.57	2.01
Fluoride	2.04	0.906

(g) *Tube Reducing Spent Lubricant—Subpart I—PSES.*

(1) There shall be no discharge of process wastewater pollutants except as provided under paragraph (g)(2) of this section.

(2) Process wastewater pollutants may be discharged, with no allowance for any pollutants discharged, provided the facility owner or operator demonstrates, on the basis of analytical methods set forth in or approved pursuant to 40 CFR part 136, that the concentrations of nitrosamine compounds in the wastewater discharged from the tube reducing process do not exceed 0.050 mg/l of N-nitrosodimethylamine, 0.020 mg/l of N-nitrosodiphenylamine, and 0.020 mg/l of N-nitrosodi-n-propylamine.

(3) The demonstration required under paragraph (g)(2) of this section shall be made once per month until the demonstration has been made for all three nitrosamine compounds for six consecutive months, after which time the demonstration may be made once per quarter. If a sample is found to contain any of the foregoing nitrosamine compounds at concentrations greater than those specified in subparagraph (g)(2) of this section, the actions described in paragraph (g)(4) of this section shall be taken, and the demonstration required under subparagraph (g)(2) of this section shall be made once per month until it has been made for all three nitrosamine compounds for six consecutive months.

(4) If sampling results show that any of the foregoing nitrosamine compounds is present in the process wastewater at concentrations greater than those specified in subparagraph (g)(2) of this section, the facility owner or operator shall ensure that, within thirty days of receiving written notification of the sampling results, there is no further discharge of tube reducing spent lubricant wastewater until the owner or operator:

(i) Performs a subsequent analysis which demonstrates that the concentrations of the foregoing nitrosamine compounds do not exceed the levels specified in paragraph (g)(2) of this section; or

(ii) Substitutes a new tube reducing lubricant and thereafter complies with the requirements of paragraph (g)(3) of this section; or

(iii) Determines the source of the pollutant whose concentration exceeded the level specified in paragraph (g)(2) of this section and demonstrates to the satisfaction of the POTW control authority that such source has been eliminated.

(5) The concentration limits specified in paragraph (g)(2) of this section apply at the point of discharge from the tube reducing process. However, sampling after the tube reducing wastewater has been commingled with other wastewaters is permitted if:

(i) Any dilution caused by the other wastewaters is taken into account in determining the appropriate (i.e., lower) allowable discharge concentration; and

(ii) An analytical method of sufficient sensitivity is used to measure the levels of each of the foregoing nitrosamine compounds in the wastewaters being sampled.

(h) *Surface treatment spent baths.*

SUBPART I—PSES

Pollutant or pollutant property	Maximum for any 1 day	Maximum for monthly average
	mg/off-kg (pounds per million off-pounds) of zirconium-hafnium surface treated	
Chromium	0.150	0.061
Cyanide	0.099	0.041
Nickel	0.653	0.432
Ammonia	45.3	20.0
Fluoride	20.0	8.98

(i) *Surface treatment rinse.*

SUBPART I—PSES

Pollutant or pollutant property	Maximum for any 1 day	Maximum for monthly average
	mg/off-kg (pounds per million off-pounds) of zirconium-hafnium surface treated	
Chromium	0.391	0.160
Cyanide	0.258	0.107
Nickel	1.71	1.13
Ammonia	119	52.1
Fluoride	52.9	23.5

(j) *Alkaline cleaning spent baths.*

SUBPART I—PSES

Pollutant or pollutant property	Maximum for any 1 day	Maximum for monthly average
	mg/off-kg (pounds per million off-pounds) of zirconium-hafnium alkaline cleaned	
Chromium	0.704	0.288
Cyanide	0.464	0.192
Nickel	3.07	2.03
Ammonia	214	93.8
Fluoride	95.2	42.3

(k) *Alkaline cleaning rinse.*

SUBPART I—PSES

Pollutant or pollutant property	Maximum for any 1 day	Maximum for monthly average
	mg/off-kg (pounds per million off-pounds) of zirconium-hafnium alkaline cleaned	
Chromium	1.38	0.565
Cyanide	0.911	0.377
Nickel	6.03	3.99
Ammonia	419	184
Fluoride	187	82.9

(l) *Sawing or grinding spent emulsions.*

SUBPART I—PSES

Pollutant or pollutant property	Maximum for any 1 day	Maximum for monthly average
	mg/off-kg (pounds per million off-pounds) of zirconium-hafnium sawed or ground with emulsions	
Chromium	0.124	0.051
Cyanide	0.082	0.034
Nickel	0.540	0.357
Ammonia	37.5	16.50
Fluoride	16.7	7.42

(m) *Wet air pollution control scrubber blowdown—Subpart I—PSES.* There shall be no allowance for the discharge or process wastewater pollutants.

(n) *Degreasing spent solvents—Subpart I—PSES.* There shall be no discharge of process wastewater pollutants.

(o) *Degreasing rinse—Subpart I—PSES.* There shall be no discharge of process wastewater pollutants.

(p) *Molten salt rinse.*

SUBPART I—PSES

Pollutant or pollutant property	Maximum for any 1 day	Maximum for monthly average
	mg/off-kg (pounds per million off-pounds) of zirconium-hafnium treated with molten salt	
Chromium	0.333	0.136
Cyanide	0.220	0.091
Nickel	1.45	0.960
Ammonia	101	44.3
Fluoride	45	20

(q) *Sawing or grinding contact cooling water.*

SUBPART I—PSES

Pollutant or pollutant property	Maximum for any 1 day	Maximum for monthly average
	mg/off-kg (pounds per million off-pounds) of zirconium-hafnium sawed or ground with contact cooling water	
Chromium	0.142	0.058
Cyanide	0.093	0.039
Nickel	0.617	0.408
Ammonia	42.8	18.8
Fluoride	19.1	8.48

(r) *Sawing or grinding rinse.*

SUBPART I—PSES

Pollutant or pollutant property	Maximum for any 1 day	Maximum for monthly average
	mg/off-kg (pounds per million off-pounds) of sawed or ground zirconium-hafnium rinsed	
Chromium	0.079	0.033
Cyanide	0.052	0.022
Nickel	0.346	0.229
Ammonia	24	10.6
Fluoride	10.7	4.75

(s) *Sawing or grinding spent neat oils—Subpart I—PSES.* There shall be no discharge of process wastewater pollutants.

(t) *Inspection and testing wastewater.*

SUBPART I—PSES

Pollutant or pollutant property	Maximum for any 1 day	Maximum for monthly average
	mg/off-kg (pounds per million off-pounds) of zirconium-hafnium tested	
Chromium	0.007	0.003
Cyanide	0.005	0.002
Nickel	0.030	0.020
Ammonia	2.06	0.903
Fluoride	0.917	0.407

[50 FR 34270, Aug. 23, 1985; 51 FR 2889, Jan. 22, 1986, as amended at 54 FR 11352, Mar. 17, 1989]

§ 471.95 Pretreatment standards for new sources (PSNS).

Except as provided in 40 CFR 403.7, any new source subject to this subpart which introduces pollutants into a publicly owned treatment works must comply with 40 CFR part 403 and achieve the following pretreatment standards for new sources (PSNS). The mass of wastewater shall not exceed the following:

(a) *Rolling spent neat oils—Subpart I—PSNS.* There shall be no discharge of process wastewater pollutants.

(b) *Drawing spent lubricants—Subpart I—PSNS.* There shall be no discharge of process wastewater pollutants.

(c) *Extrusion spent emulsions—Subpart I—PSNS.* There shall be no discharge of process wastewater pollutants.

(d) *Extrusion press hydraulic fluid leakage.*

SUBPART I—PSNS

Pollutant or pollutant property	Maximum for any 1 day	Maximum for monthly average
	mg/off-kg (pounds per million off-pounds) of zirconium-hafnium extruded	
Chromium	0.104	0.043
Cyanide	0.069	0.029
Nickel	0.455	0.301
Ammonia	31.6	13.9
Fluoride	14.1	6.26

(e) *Swaging spent neat oils—Subpart I—PSNS.* There shall be no discharge of process wastewater pollutants.

(f) *Heat treatment contact cooling water.*

SUBPART I—PSNS

Pollutant or pollutant property	Maximum for any 1 day	Maximum for monthly average
	mg/off/kg (pounds per million off-pounds) of zirconium-hafnium heat treated	
Chromium	0.015	0.006
Cyanide	0.010	0.004
Nickel	0.066	0.044
Ammonia	4.57	2.01
Fluoride	2.04	0.906

(g) *Tube Reducing Spent Lubricant—Subpart I—PSNS.*

(1) There shall be no discharge of process wastewater pollutants except as provided under paragraph (g)(2) of this section.

(2) Process wastewater pollutants may be discharged, with no allowance for any pollutants discharged, provided the facility owner or operator demonstrates, on the basis of analytical

methods set forth in or approved pursuant to 40 CFR part 136, that the concentrations of nitrosamine compounds in the wastewater discharged from the tube reducing process do not exceed 0.050 mg/l of N-nitrosodimethylamine, 0.020 mg/l of N-nitrosodiphenylamine, and 0.020 mg/l of N-nitrosodi-n-propylamine.

(3) The demonstration required under subparagraph (g)(2) of this section shall be made once per month until the demonstration has been made for all three nitrosamine compounds for six consecutive months, after which time the demonstration may be made once per quarter. If a sample is found to contain any of the foregoing nitrosamine compounds at concentrations greater than those specified in subparagraph (g)(2) of this section, the actions described in paragraph (g)(4) of this section shall be taken, and the demonstration required under paragraph (g)(2) shall be made once per month until it has been made for all three nitrosamine compounds for six consecutive months.

(4) If sampling results show that any of the foregoing nitrosamine compounds is present in the process wastewater at concentrations greater than those specified in subparagraph (g)(2) of this section, the facility owner or operator shall ensure that, within thirty days of receiving written notification of the sampling results, there is no further discharge of tube reducing spent lubricant wastewater until the owner or operator:

(i) Performs a subsequent analysis which demonstrates that the concentrations of the foregoing nitrosamine compounds do not exceed the levels specified in paragraph (g)(2) of this section; or

(ii) Substitutes a new tube reducing lubricant and thereafter complies with the requirements of paragraph (g)(3) of this section; or

(iii) Determines the source of the pollutant whose concentration exceeded the level specified in paragraph (g)(2) of this section and demonstrates to the satisfaction of the POTW control authority that such source has been eliminated.

(5) The concentration limits specified in paragraph (g)(2) of this section apply at the point of discharge from the tube reducing process. However, sampling after the tube reducing wastewater has been commingled with other wastewaters is permitted if:

(i) Any dilution caused by the other wastewaters is taken into account in determining the appropriate (i.e., lower) allowable discharge concentration; and

(ii) An analytical method of sufficient sensitivity is used to measure the levels of each of the foregoing nitrosamine compounds in the wastewaters being sampled.

(h) *Surface treatment spent baths.*

SUBPART I—PSNS

Pollutant or pollutant property	Maximum for any 1 day	Maximum for monthly average
	mg/off/kg (pounds per million off-pounds) of zirconium-hafnium surface treated	
Chromium	0.150	0.061
Cyanide	0.099	0.041
Nickel	0.653	0.432
Ammonia	45.3	20
Fluoride	20	8.98

(i) *Surface treatment rinse.*

SUBPART I—PSNS

Pollutant or pollutant property	Maximum for any 1 day	Maximum for monthly average
	mg/off/kg (pounds per million off-pounds) of zirconium-hafnium surface treated	
Chromium	0.391	0.160
Cyanide	0.258	0.107
Nickel	1.71	1.13
Ammonia	119	52.1
Fluoride	52.9	23.5

(j) *Alkaline cleaning spent baths.*

SUBPART I—PSNS

Pollutant or pollutant property	Maximum for any 1 day	Maximum for monthly average
	mg/off/kg (pounds per million off-pounds) of zirconium-hafnium alkaline cleaned	
Chromium	0.704	0.288
Cyanide	0.464	0.192
Nickel	3.07	2.03
Ammonia	214	93.8
Fluoride	95.2	42.3

(k) *Alkaline cleaning rinse.*

SUBPART I—PSNS

Pollutant or pollutant property	Maximum for any 1 day	Maximum for monthly average
	mg/off-kg (pounds per million off-pounds) of zirconium-hafnium alkaline cleaned	
Chromium	1.38	0.565
Cyanide	0.911	0.377
Nickel	6.03	3.99
Ammonia	419	184
Fluoride	187	82.9

(l) *Sawing or grinding spent emulsions.*

SUBPART I—PSNS

Pollutant or pollutant property	Maximum for any 1 day	Maximum for monthly average
	mg/off-kg (pounds per million off-pounds) of zirconium-hafnium sawed or ground with emulsions	
Chromium	0.124	0.051
Cyanide	0.082	0.034
Nickel	0.540	0.357
Ammonia	37.5	16.50
Fluoride	16.7	7.42

(m) *Wet air pollution control scrubber blowdown—Subpart I—PSNS.* There shall be no allowance for the discharge of process wastewater pollutants.

(n) *Degreasing spent solvents—Subpart I—PSNS.* There shall be no discharge of process wastewater pollutants.

(o) *Degreasing rinse—Subpart I—PSNS.* There shall be no discharge of process wastewater pollutants.

(p) *Molten salt rinse.*

SUBPART I—PSNS

Pollutant or pollutant property	Maximum for any 1 day	Maximum for monthly average
	mg/off-kg (pounds per million off-pounds) of zirconium-hafnium rinsed following molten salt treatment	
Chromium	0.333	0.136
Cyanide	0.220	0.091
Nickel	1.45	0.960
Ammonia	101	44.3
Fluoride	45.0	20.0

(q) *Sawing or grinding contact cooling water.*

SUBPART I—PSNS

Pollutant or pollutant property	Maximum for any 1 day	Maximum for monthly average
	mg/off-kg (pounds per million off-pounds) of zirconium-hafnium sawed or ground with contact cooling water	
Chromium	0.142	0.058
Cyanide	0.093	0.039
Nickel	0.617	0.408
Ammonia	42.8	18.8
Fluoride	19.1	8.48

(r) *Sawing or grinding rinse.*

SUBPART I—PSNS

Pollutant or pollutant property	Maximum for any 1 day	Maximum for monthly average
	mg/off-kg (pounds per million off-pounds) of sawed or ground zirconium-hafnium rinsed	
Chromium	0.079	0.033
Cyanide	0.052	0.022
Nickel	0.346	0.229
Ammonia	24.0	10.6
Fluoride	10.7	4.75

(s) *Sawing or grinding spent neat oils—Subpart I—PSNS.* There shall be no discharge of process wastewater pollutants.

(t) *Inspection and testing wastewater.*

SUBPART I—PSNS

Pollutant or pollutant property	Maximum for any 1 day	Maximum for monthly average
	mg/off-kg (pounds per million off-pounds) of zirconium-hafnium tested	
Chromium	0.007	0.003
Cyanide	0.005	0.002
Nickel	0.030	0.020
Ammonia	2.06	0.903
Fluoride	0.917	0.407

[50 FR 34270, Aug. 23, 1985; 51 FR 2889, Jan. 22, 1986, as amended at 54 FR 11352, Mar. 17, 1989]

§471.96 Effluent limitations representing the degree of effluent reduction attainable by the application of the best conventional pollutant control technology (BCT). [Reserved]

Subpart J—Metals Powders Subcategory

§471.100 Applicability; description of the powder metals subcategory.

This subpart applies to discharges of pollutants to waters of the United States, and introductions of pollutants into publicly owned treatment works from the process operations of the metal powders subcategory.

§471.101 Effluent limitations representing the degree of effluent reduction attainable by the application of the best practicable control technology currently available (BPT).

Except as provided in 40 CFR 125.30 through 125.32, any existing point source subject to this subpart must achieve the following effluent limitations for the process operations representing the degree of effluent reduction attainable by the application of the best practicable control technology currently available (BPT):

(a) *Metal powder production atomization wastewater.*

SUBPART J—BPT

Pollutant or pollutant property	Maximum for any 1 day	Maximum for monthly average
	mg/off-kg (pounds per million off-pounds) of powder wet atomized	
Copper	9.58	5.04
Cyanide	1.46	0.605
Lead	2.12	1.01
Oil and grease	101	60.5
TSS	207	98.3
pH	(1)	(1)

[1] Within the range of 7.5 to 10.0 at all times.

(b) *Sizing spent emulsion.*

SUBPART J—BPT

Pollutant or pollutant property	Maximum for any 1 day	Maximum for monthly average
	mg/off-kg (pounds per million off-pounds) of powder sized	
Copper	0.028	0.015
Cyanide	0.004	0.002
Lead	0.006	0.003
Oil and grease	0.292	0.175
TSS	0.599	0.285
pH	(1)	(1)

[1] Within the range of 7.5 to 10.0 at all times.

(c) *Oil-resin impregnation wastewater—Subpart J—BPT.* There shall be no discharge of process wastewater pollutants.

(d) *Steam treatment wet air pollution control scrubber blowdown.*

SUBPART J—BPT

Pollutant or pollutant property	Maximum for any 1 day	Maximum for monthly average
	mg/off-kg (pounds per million off-pounds) of power metallurgy parts steam treated	
Copper	1.51	0.792
Cyanide	0.230	0.095
Lead	0.333	0.159
Oil and grease	15.9	9.51
TSS	32.5	15.5
pH	(1)	(1)

[1] Within the range of 7.5 to 10.0 at all times.

(e) *Tumbling, burnishing and cleaning wastewater.*

SUBPART J—BPT

Pollutant or pollutant property	Maximum for any 1 day	Maximum for monthly average
	mg/off-kg (pounds per million off-pounds) of powder metallurgy parts tumbled, burnished, or cleaned	
Copper	8.36	4.40
Cyanide	1.28	0.528
Lead	1.85	0.880
Oil and grease	88.0	52.800
TSS	181	85.8
pH	(1)	(1)

[1] Within the range of 7.5 to 10.0 at all times.

(f) *Sawing or grinding spent neat oils.—Subpart J—BPT.* There shall be no discharge of process wastewater pollutants.

(g) *Sawing or grinding spent emulsion.*

SUBPART J—BPT

Pollutant or pollutant property	Maximum for any 1 day	Maximum for monthly average
	mg/off-kg (pounds per million off-pounds) of powder metallurgy parts sawed or ground with emulsion	
Copper	0.035	0.018
Cyanide	0.005	0.002
Lead	0.008	0.004
Oil and grease	0.362	0.217
TSS	0.742	0.353
pH	(1)	(1)

[1] Within the range of 7.5 to 10.0 at all times.

(h) *Sawing or grinding contact cooling water.*

SUBPART J—BPT

Pollutant or pollutant property	Maximum for any 1 day	Maximum for monthly average
	mg/off-kg (pounds per million off-pounds) of powder metallurgy parts sawed or ground with contact cooling	
Copper	3.08	1.62
Cyanide	0.470	0.195
Lead	0.681	0.324
Oil and grease	32.4	19.5
TSS	66.4	31.6
pH	(1)	(1)

[1] Within the range of 7.5 to 10.0 at all times.

(i) *Hot pressing contact cooling water.*

SUBPART J—BPT

Pollutant or pollutant property	Maximum for any 1 day	Maximum for monthly average
	mg/off-kg (pounds per million off-pounds) of powder cooled after pressing	
Copper	16.7	8.80
Cyanide	2.55	1.06
Lead	3.70	1.76
Oil and grease	176	106
TSS	361	172
pH	(1)	(1)

[1] Within the range of 7.5 to 10.0 at all times.

(j) *Mixing wet air pollution control scrubber blowdown.*

SUBPART J—BPT

Pollutant or pollutant property	Maximum for any 1 day	Maximum for monthly average
	mg/off-kg (pounds per million off-pounds) of powder mixed	
Copper	15.0	7.90
Cyanide	2.29	0.948
Lead	3.32	1.58
Oil and grease	158	94.8
TSS	324	154
pH	(1)	(1)

[1] Within the range of 7.5 to 10.0 at all times.

(k) *Degreasing spent solvents.—Subpart J—BPT.* There shall be no discharge of process wastewater pollutants.

[50 FR 34270, Aug. 23, 1985; 51 FR 2889, Jan. 22, 1986]

§ 471.102 Effluent limitations representing the degree of effluent reduction attainable by the application of the best available technology economically achievable (BAT).

Except as provided in 40 CFR 125.30 through 125.32, any existing point source subject to this subpart must achieve the following effluent limitations representing the degree of effluent reduction attainable by the application of the best available technology economically achievable (BAT):

(a) *Metal powder production atomization wastewater.*

SUBPART J—BAT

Pollutant or pollutant property	Maximum for any 1 day	Maximum for monthly average
	mg/off-kg (pounds per million off-pounds) of powder wet atomized	
Copper	9.58	5.04
Cyanide	1.46	0.605
Lead	2.12	1.01

(b) *Sizing spent emulsions.*

SUBPART J—BAT

Pollutant or pollutant property	Maximum for any 1 day	Maximum for monthly average
	mg/off-kg (pounds per million off-pounds) or powder sized	
Copper	0.028	0.015
Cyanide	0.004	0.002
Lead	0.006	0.003

(c) *Oil-resin impregnation wastewater—Subpart J—BAT.* There shall be no discharge of process wastewater pollutants.

(d) *Steam treatment wet air pollution control scrubber blowdown.*

SUBPART J—BAT

Pollutant or pollutant property	Maximum for any 1 day	Maximum for monthly average
	mg/off-kg (pounds per million off-pounds) of powder metallurgy parts steam treated	
Copper	1.51	0.792
Cyanide	0.230	0.095
Lead	0.333	0.159

(e) *Tumbling, burnishing and cleaning wastewater.*

SUBPART J—BAT

Pollutant or pollutant property	Maximum for any 1 day	Maximum for monthly average
	mg/off-kg (pounds per million off-pounds) or powder metallurgy parts tumbled, burnished, or cleaned	
Copper	8.36	4.40
Cyanide	1.28	0.528
Lead	1.850	0.880

(f) *Sawing or grinding spent neat oils. Subpart J—BAT.* There shall be no discharge of process wastewater pollutants.

(g) *Sawing or grinding spent emulsions.*

SUBPART J—BAT

Pollutant or pollutant property	Maximum for any 1 day	Maximum for monthly average
	mg/off-kg (pounds per million off-pounds) of powder metallurgy parts sawed or ground with emulsions	
Copper	0.0035	0.018
Cyanide	0.005	0.002
Lead	0.008	0.004

(h) *Sawing or grinding contact cooling water.*

SUBPART J—BAT

Pollutant or pollutant property	Maximum for any 1 day	Maximum for monthly average
	mg/off-kg (pounds per million off-pounds) of powder sawed or ground with contact cooling	
Copper	3.08	1.62
Cyanide	0.470	0.195
Lead	0.681	0.324

(i) *Hot pressing contact cooling water.*

SUBPART J—BAT

Pollutant or pollutant property	Maximum for any 1 day	Maximum for monthly average
	mg/off-kg (pounds per million off-pounds) of powder cooled after pressing	
Copper	16.7	8.80
Cyanide	2.55	1.06
Lead	3.70	1.760

(j) *Mixing wet air pollution control scrubber blowdown.*

SUBPART J—BAT

Pollutant or pollutant property	Maximum for any 1 day	Maximum for monthly average
	mg/off-kg (pounds per million off-pounds) of powder mixed	
Copper	15.0	7.90
Cyanide	2.29	0.948
Lead	3.32	1.58

(k) *Degreasing spent solvents—Subpart J—BAT.* There shall be no discharge of process wastewater pollutants.

[50 FR 34270, Aug. 23, 1985; 51 FR 2889, Jan. 22, 1986]

§471.103 New source performance standards (NSPS).

Any new source subject to this subpart must achieve the following new source performance standards (NSPS). The mass of pollutants in the metal powder process wastewater shall not exceed the following values:

(a) *Metal powder production atomization wastewater.*

SUBPART J—NSPS

Pollutant or pollutant property	Maximum for any 1 day	Maximum for monthly average
	mg/off-kg (pounds per million off-pounds) of powder wet atomized	
Copper	9.58	5.04
Cyanide	1.46	0.605
Lead	2.12	1.01
Oil and grease	101	60.5
TSS	207	98.3
pH	(1)	(1)

[1] Within the range of 7.5 to 10.0 at all times.

(b) *Sizing spent emulsions.*

SUBPART J—NSPS

Pollutant or pollutant property	Maximum for any 1 day	Maximum for monthly average
	mg/off-kg (pounds per million off-pounds) of powder sized	
Copper	0.028	0.015
Cyanide	0.004	0.002
Lead	0.006	0.003
Oil and grease	0.292	0.175
TSS	0.599	0.285
pH	(1)	(1)

[1] Within the range of 7.5 to 10.0 at all times.

(c) *Oil-resin impregnation wastewater.—Subpart J—NSPS.* There shall be no discharge of process wastewater pollutants.

(d) *Steam treatment wet air pollution control scrubber blowdown.*

SUBPART J—NSPS

Pollutant or pollutant property	Maximum for any 1 day	Maximum for monthly average
	mg/off-kg (pounds per million off-pounds) of powder metallurgy parts steam treated	
Copper	0.151	0.079
Cyanide	0.023	0.010
Lead	0.033	0.016
Oil and grease	1.59	0.951
TSS	3.25	1.55
pH	(1)	(1)

[1] Within the range of 7.5 to 10.0 at all times.

(e) *Tumbling, burnishing and cleaning wastewater.*

SUBPART J—NSPS

Pollutant or pollutant property	Maximum for any 1 day	Maximum for monthly average
	mg/off-kg (pounds per million off-pounds) of powder metallurgy parts tumbled, burnished, or cleaned	
Copper	0.836	0.440
Cyanide	0.128	0.053
Lead	0.185	0.088
Oil and grease	8.80	5.28
TSS	18.1	8.58
pH	(1)	(1)

[1] Within the range of 7.5 to 10.0 at all times.

(f) *Sawing or grinding spent neat oils.—Subpart J—NSPS.* There shall be no discharge of process wastewater pollutants.

(g) *Sawing or grinding spent emulsions.*

SUBPART J—NSPS

Pollutant or pollutant property	Maximum for any 1 day	Maximum for monthly average
	mg/off-kg (pounds per million off-pounds) of powder metallurgy parts sawed or ground with emulsions	
Copper	0.035	0.018
Cyanide	0.005	0.002
Lead	0.008	0.004
Oil and grease	0.362	0.217
TSS	0.742	0.353
pH	(1)	(1)

[1] Within the range of 7.5 to 10.0 at all times.

(h) *Sawing or grinding contact cooling waterr.*

SUBPART J—NSPS

Pollutant or pollutant property	Maximum for any 1 day	Maximum for monthly average
	mg/off-kg (pounds per million off-pounds) of powder sawed or ground with contact cooling water	
Copper	3.08	1.62
Cyanide	0.470	0.195
Lead	0.681	0.324
Oil and grease	32.4	19.5
TSS	66.4	31.6
pH	(1)	(1)

[1] Within the range of 7.5 to 10.0 at all times.

(i) *Hot pressing contact cooling water.*

SUBPART J—NSPS

Pollutant or pollutant property	Maximum for any 1 day	Maximum for monthly average
	mg/off-kg (pounds per million off-pounds) of powder cooled after pressing	
Copper	1.67	0.880
Cyanide	0.255	0.106
Lead	0.370	0.176
Oil and grease	17.6	10.6
TSS	36.1	17.2
pH	(1)	(1)

1 Within the range of 7.5 to 10.0 at all times.

(j) *Mixing wet air pollution control scrubber blowdown.*

SUBPART J—NSPS

Pollutant or pollutant property	Maximum for any 1 day	Maximum for monthly average
	mg/off-kg (pounds per million off-pounds) of powder mixed	
Copper	15.0	7.90
Cyanide	2.29	0.948
Lead	3.32	1.58
Oil and grease	158	94.8
TSS	324	154
pH	(1)	(1)

1 Within the range of 7.5 to 10.0 at all times.

(k) *Degreasing spent solvents.—Subpart J—NSPS.* There shall be no discharge of process wastewater pollutants.

[50 FR 34270, Aug. 23, 1985; 51 FR 2889, Jan. 22, 1986]

§471.104 Pretreatment standards for existing sources (PSES).

Except as provided in 40 CFR 403.7 and 403.13, any existing source subject to this subpart which introduces pollutants into a publicly owned treatment works must comply with 40 CFR part 403 and by August 23, 1988 achieve the following pretreatment standards for existing sources (PSES). The mass of wastewater pollutants in metal powders process wastewater introduced into a POTW shall not exceed the following values:

(a) *Metal powder production atomization wastewater.*

SUBPART J—PSES

Pollutant or pollutant property	Maximum for any 1 day	Maximum for monthly average
	mg/off-kg (pounds per million off-pounds) of powder wet atomized	
Copper	9.58	5.040
Cyanide	1.46	0.605
Lead	2.12	1.01

(b) *Sizing spent emulsions.*

SUBPART J—PSES

Pollutant or pollutant property	Maximum for any 1 day	Maximum for monthly average
	mg/off-kg (pounds per million off-pounds) of powder sized	
Copper	0.028	0.015
Cyanide	0.004	0.002
Lead	0.006	0.003

(c) *Oil-resin impregnation wastewater.—Subpart J—PSES.*

(d) *Steam treatment wet air pollution control scrubber blowdown.*

SUBPART J—PSES

Pollutant or pollutant property	Maximum for any 1 day	Maximum for monthly average
	mg/off-kg (pounds per million off-pounds) of powder metallurgy part steam treated	
Copper	1.51	0.792
Cyanide	0.230	0.095
Lead	0.333	0.159

(e) *Tumbling, burnishing and cleaning wastewater.*

SUBPART J—PSES

Pollutant or pollutant property	Maximum for any 1 day	Maximum for monthly average
	mg/off-kg (pounds per million off-pounds) of powder metallurgy parts tumbled, burnished, or cleaned	
Copper	8.36	4.40
Cyanide	1.28	0.528
Lead	1.85	0.880

(f) *Sawing or grinding spent neat oils.—Subpart J—PSES.* There shall be no discharge of process watewater pollutants.

(g) *Sawing or grinding spent emulsions.*

SUBPART J—PSES

Pollutant or pollutant property	Maximum for any 1 day	Maximum for monthly average
	mg/off-kg (pounds per million off-pounds) of powder metallurgy parts sawed or ground with emulsions	
Copper	0.035	0.018
Cyanide	0.005	0.002
Lead	0.008	0.004

(h) *Sawing or grinding contact cooling water.*

SUBPART J—PSES

Pollutant or pollutant property	Maximum for any 1 day	Maximum for monthly average
	mg/off-kg (pounds per million off-pounds) of powder sawed or ground with contact cooling water	
Copper	3.08	1.62
Cyanide	0.470	0.195
Lead	0.681	0.324

(i) *Hot pressing contact cooling water.*

SUBPART J—PSES

Pollutant or pollutant property	Maximum for any 1 day	Maximum for monthly average
	mg/off-kg (pounds per million off-pounds) of powder cooled after pressing	
Copper	16.7	8.80
Cyanide	2.55	1.06
Lead	3.70	1.76

(j) *Mixing wet air pollution control scrubber blowdown.*

SUBPART J—PSES

Pollutant or pollutant property	Maximum for any 1 day	Maximum for monthly average
	mg/off-kg (pounds per million off-pounds) of powder mixed	
Copper	15.0	7.90
Cyanide	2.29	0.948
Lead	3.32	1.58

(k) *Degreasing spent solvents—Subpart J—PSES.* There shall be no discharge of process wastewater pollutants.

[50 FR 34270, Aug. 23, 1985; 51 FR 2889, Jan. 22, 1986]

§ 471.105 Pretreatment standards for new sources (PSNS).

Except as provided in 40 CFR 403.7, any new source subject to this subject which introduces pollutants into a publicly owned treatment works must comply with 40 CFR part 403 and achieve the following pretreatment standards for new sources. The mass of wastewater pollutants in metal powders process wastewater introduced into a POTW shall not exceed the following values:

(a) *Metal powder production atomization wastewater.*

SUBPART J—PSNS

Pollutant or pollutant property	Maximum for any 1 day	Maximum for monthly average
	mg/off-kg (pounds per million off-pounds) of powder wet atomized	
Copper	9.58	5.04
Cyanide	1.46	0.605
Lead	2.12	1.01

(b) *Sizing spent emulsions.*

SUBPART J—PSNS

Pollutant or pollutant property	Maximum for any 1 day	Maximum for monthly average
	mg/off-kg (pounds per million off-pounds) of powder sized	
Copper	0.028	0.015
Cyanide	0.004	0.002
Lead	0.006	0.003

(c) *Oil-resin impregnation wastewater—Subpart J—PSNS.* There shall be no discharge of process wastewater pollutants.

(d) *Steam treatment wet air pollution control scrubber blowdown.*

SUBPART J—PSNS

Pollutant or pollutant property	Maximum for any 1 day	Maximum for monthly average
	mg/off-kg (pounds per million off-pounds) of powder metallurgy parts steam treated	
Copper	0.151	0.079
Cyanide	0.023	0.010
Lead	0.033	0.016

(e) *Tumbling, burnishing and cleaning wastewater.*

SUBPART J—PSNS

Pollutant or pollutant property	Maximum for any 1 day	Maximum for monthly average
	mg/off-kg (pounds per million off-pounds) of powder metallurgy parts tumbled, burnished, or cleaned	
Copper	0.836	0.440
Cyanide	0.128	0.053
Lead	0.185	0.088

(f) *Sawing or grinding spent neat oils—Subpart J—PSNS.* There shall be no discharge of process wastewater pollutants.

(g) *Sawing or grinding spent emulsions.*

UBPART J—PSNS

Pollutant or pollutant property	Maximum for any 1 day	Maximum for monthly average
	mg/off-kg (pounds per million off-pounds) of powder metallurgy parts sawed or ground with emulsions	
Copper	0.035	0.018
Cyanide	0.005	0.002
Lead	0.008	0.004

(h) *Sawing or grinding contact cooling water.*

SUBPART J—PSNS

Pollutant or pollutant property	Maximum for any 1 day	Maximum for monthly average
	mg/off-kg (pounds per million off-pounds) of powder sawed or ground with contact cooling water	
Copper	3.08	1.620
Cyanide	0.470	0.195
Lead	0.681	0.324

(i) *Hot pressing contact cooling water.*

SUBPART J—PSNS

Pollutant or pollutant property	Maximum for any 1 day	Maximum for monthly average
	mg/off-kg (pounds per million off-pounds) of powder cooled after pressing	
Copper	1.67	0.880
Cyanide	0.255	0.106
Lead	0.370	0.176

(j) *Mixing wet air pollution control scrubber blowdown.*

SUBPART J—PSNS

Pollutant or pollutant property	Maximum for any 1 day	Maximum for monthly average
	mg/off-kg (pounds per million off-pounds) of powder mixed	
Copper	15.0	7.90
Cyanide	2.29	0.948
Lead	3.32	1.58

(k) *Degreasing spent solvents—Subpart J—PSNS.* There shall be no discharge of process wastewater pollutants.

[50 FR 34270, Aug. 23, 1985; 51 FR 2889, Jan. 22, 1986]

§471.106 Effluent limitations representing the degree of effluent reduction attainable by the application of the best conventional pollutant control technology (BCT). [Reserved]