AUTHENTICATED
U.S. GOVERNMENT
INFORMATION
GPO

Subtitle B—Other Regulations Relating To Transportation (Continued)

CHAPTER IV—COAST GUARD, DEPARTMENT OF TRANSPORTATION

SUBCHAPTER A [RESERVED]

SUBCHAPTER B—SAFETY APPROVAL OF CARGO CONTAINERS

Part		*Page*
450	General	7
451	Testing and approval of containers	10
452	Examination of containers	13
453	Control and enforcement	15

SUBCHAPTER A [RESERVED]
SUBCHAPTER B—SAFETY APPROVAL OF CARGO CONTAINERS

PART 450—GENERAL

Subpart A—General Provisions

Sec.
450.1 Purpose.
450.3 Definitions.
450.5 General requirements and applicability.
450.7 Marking.

Subpart B—Procedures for Delegation to Approval Authorities

450.11 Application for delegation of authority.
450.12 Criteria for selection of Approval Authorities.
450.13 Granting of delegation.
450.14 Conditions of delegation.
450.15 Termination of delegation.
450.16 Withdrawal of delegation.

AUTHORITY: Sec. 4, 91 Stat 1475 (46 U.S.C. 1503); 49 CFR 1.46(n).

Subpart A—General Provisions

§ 450.1 Purpose.

This subchapter establishes requirements and procedures for safety approval and periodic examination of cargo containers used in international transport, as defined in the International Safe Container Act.

[45 FR 37213, June 2, 1980]

§ 450.3 Definitions.

(a) In this subchapter: (1) *Approval Authority* means a delegate of the Commandant authorized to approve containers within the terms of the convention, the International Safe Container Act and this subchapter.

(2) *Container* means an article of transport equipment:

(i) Of a permanent character and suitable for a repeated use.

(ii) Specially design to facilitate the transport of goods, by one or more modes of transport, without intermediate reloading.

(iii) Designed to be secured and readily handled, having corner fittings for these purposes.

(iv) Of a size that the area enclosed by the four outer bottom corners is either:

(A) At least 14 sq.m. (150 sq.ft.), or

(B) At least 7 sq.m. (75 sq.ft.) if it has top corner fittings. The term *container* includes neither vehicles nor packaging; however, containers when carried on chassis are included.

(3) *Convention* means the International Convention for Safe Containers (CSC) done at Geneva, December 2, 1972 and ratified by the United States on January 3, 1978.

(4) *District Commander* means the Coast Guard officer designated by the Commandant to command a Coast Guard District.

(5) *New Container* means a container, the construction of which began on or after September 6, 1977.

(6) *Existing Container* means a container that is not a new container.

[45 FR 37213, June 2, 1980, as amended at 47 FR 50496, Nov. 8, 1982]

§ 450.5 General requirements and applicability.

(a) Every owner of a new or existing container used or offered for movement in international transport shall have the container approved in accordance with the procedures established by the Administration of any contracting party to the convention, except that existing containers need not be approved until September 6, 1982.

(b) Every owner of an approved container used or offered for movement in international transport who:

(1) Is domiciled in the United States and has the head office in the United States, or

(2) Is domiciled in a country which is not a contracting party to the convention but has the principal office in the United States, shall have the container periodically examined in accordance with part 452 of this subchapter.

(c) Every owner of an approved container used or offered for movement in international transport who:

(1) Is domiciled in the United States but has the principal office in the jurisdiction of another contracting party to the convention, or

(2) Is domiciled in the jurisdiction of another contracting party to the convention but has the principal office in the United States, but elects to have the container examined in accordance with the procedures prescribed by the United States, shall conform to part 452 of this subchapter.

(d) Every owner of an approved container used or offered for movement in international transport who is neither domiciled in nor has the principal office in the jurisdiction of a contracting party to the convention, but elects to have the container examined in accordance with procedures prescribed by the United States, shall conform to part 452 of this subchapter.

[45 FR 37213, June 2, 1980]

§ 450.7 Marking.

(a) On each container that construction begins on or after January 1, 1984, all maximum gross weight markings on the container must be consistent with the maximum gross weight information on the safety approval plate.

(b) On each container that construction begins before January 1, 1984, all maximum gross weight markings on the container must be consistent with the gross weight information on the safety approval plate no later than January 1, 1989.

(Approved by the Office of Management and Budget under OMB control number 2115–0094)

[49 FR 15562, Apr. 19, 1984]

Subpart B—Procedure for Delegation to Approval Authorities

§ 450.11 Application for delegation of authority.

(a) Any person or organization seeking delegation of authority to act as an Approval Authority may apply to the Commandant, (G–MVI), U.S. Coast Guard, Washington, DC 20593. Each application must be signed and certified by the applicant or, if the applicant is an organization, by an authorized officer of the organization. A list of delegated approval authorities may be obtained from the Commandant (G–MVI).

(b) The application must include the following information:

(1) Name and address, including place of incorporation, if a corporation.

(2) A description of the organization, including the ownership, managerial structure, organizational components and directly affiliated agencies and their functions utilized for supporting technical services.

(3) A listing of the basic technical services offered.

(4) A general description of the geographic area served.

(5) A general description of the clients being served or intended to be served.

(6) A description of the types of work performed by the applicant in the past, noting the amount and extent of such work performed within the previous three years.

(7) A description of the personnel to be utilized, indicating general background and qualifications, particularly for the surveyors to be involved in the actual witnessing of tests.

(8) A description of its means of assuring continued competence of its personnel.

(9) A detailed schedule of the fees proposed to be charged for the approval service.

(10) Evidence of financial stability.

(11) At least three business references who will furnish information regarding work performed by the applicant.

(12) A statement that the Coast Guard may inspect the applicant's facilities and records of approvals under the convention and these regulations.

(c) The application may contain any additional information the applicant deems to be pertinent.

(d) The applicant must furnish any additional information to evaluate the applicant's qualifications, if requested by the Chief, Merchant Vessel Inspection Division, Office of Merchant Marine Safety, U.S. Coast Guard.

(e) Applications from foreign nationals or organizations must contain an affidavit stating that the agency responsible for implementing the Convention in their country has delegated to the applicant an approval authority, and that it also delegates similar authority to United States citizens or organizations having delegations from

the United States. The affidavit must also contain the name and address of the agency to which U.S. citizens or organizations must apply for delegation as an approval authority.

[45 FR 37213, June 2, 1980, as amended at 47 FR 50496, Nov. 8, 1982]

§ 450.12 Criteria for selection of Approval Authorities.

(a) The Chief, Merchant Vessel Inspection Division, Office of Merchant Marine Safety, U.S. Coast Guard selects persons or organizations in accordance with the following criteria:

(1) The person or organization is independent of manufacturers and owners in that:

(i) It has sufficient breadth of interest or activity, so that the loss or award of a specific contract to approve containers would not be a substantial factor in the financial well-being of the organization.

(ii) The employment status of the personnel of the organization is free from influence or control of manufacturers, owners, operators or lessors of containers.

(2) The person or organization has demonstrated the ability to competently carry out the procedures required for approval.

(3) The person or organization has an acceptable degree of financial security.

[45 FR 37213, June 2, 1980, as amended at 47 FR 50496, Nov. 8, 1982]

§ 450.13 Granting of delegation.

(a) The Chief, Merchant Vessel Inspection Division, Office of Merchant Marine Safety, U.S. Coast Guard acts on applications for delegation within 60 days of receipt.

(b) If an applicant for delegation does not provide sufficient information with regard to all the criteria for delegation, the Chief, Merchant Vessel Inspection Division, Office of Merchant Marine Safety, U.S. Coast Guard denies the application. A denial of an application on this basis is without prejudice to the submission of a new or amended application.

(c) If an applicant satisfies all the criteria for delegation the Chief, Merchant Vessel Inspection Division, Office of Merchant Marine Safety, U.S. Coast Guard sends the applicant a letter of delegation, and assigns to the Approval Authority an alphabetic Approval Authority identification code.

(d) If an applicant fails to satisfy all the criteria for delegation, the Chief, Merchant Vessel Inspection Division, Office of Merchant Marine Safety, U.S. Coast Guard gives the applicant written notice of denial of his application. The notice contains all the reasons for the denial. The applicant may contest the denial by submitting additional oral or written evidence in support of its qualifications. Upon review of the evidence, the Chief, Merchant Vessel Inspection Division, Office of Merchant Marine Safety, U.S. Coast Guard notifies the applicant of the final decision.

[45 FR 37213, June 2, 1980, as amended at 47 FR 50496, Nov. 8, 1982]

§ 450.14 Conditions of delegation.

(a) The following conditions are part of every delegation: (1) The Approval Authority shall use only testing equipment that it has determined by inspection to be suitable for the purpose.

(2) All approval numbers issued by the Approval Authority must contain the identification code, assigned to the Approval Authority by the Chief, Merchant Vessel Inspection Division, Office of Merchant Marine Safety, U.S. Coast Guard.

(3) Each Approval Authority shall maintain the following records for a period of at least 15 years from the date of approval. (When the Approval Authority's delegation is withdrawn before such time, the records relating to the approvals issued within the prior 15 years must be turned over to the Chief, Merchant Vessel Inspection Division, Office of Merchant Marine Safety, U.S. Coast Guard):

(i) Each notice of approval issued.

(ii) A copy of the application and final approved drawings (if applicable) to which each approval refers.

(iii) The manufacturer's serial numbers and the owner's identification numbers of all containers covered by each approval.

(4) Each Approval Authority shall establish and make available to the public a schedule of fees for the approval

services performed under these regulations. The fees must not be disproportionate to the costs (including transportation expense, if any) actually incurred.

(5) The Approval Authority shall grant the Coast Guard the right to inspect records and shall cooperate in the conduct of such inspections.

(6) The Approval Authority shall comply with any other term or condition stated in its letter of delegation.

[45 FR 37213, June 2, 1980, as amended at 47 FR 50496, Nov. 8, 1982]

§ 450.15 Termination of delegation.

(a) An Approval Authority may voluntarily terminate its delegation by giving written notice of its intent to the Chief, Merchant Vessel Inspection Division, Office of Merchant Marine Safety, U.S. Coast Guard. This notice must contain the date on which the termination is to be effective.

[45 FR 37213, June 2, 1980, as amended at 47 FR 50496, Nov. 8, 1982]

§ 450.16 Withdrawal of delegation.

(a) The Chief, Merchant Vessel Inspection Division, Office of Merchant Marine Safety, U.S. Coast Guard withdraws a delegation if: (1) It is determined that the application for delegation contained a material misrepresentation.

(2) An Approval Authority fails to comply with a condition of delegation.

(3) An Approval Authority is incompetent.

(b) When a delegation is withdrawn, the Chief, Merchant Vessel Inspection Division, Office of Merchant Marine Safety, U.S. Coast Guard gives to the Approval Authority:

(1) Written notice of the facts or conduct believed to warrant the withdrawal.

(2) Opportunity to submit oral or written evidence.

(3) Opportunity to demonstrate or achieve compliance with the applicable requirement.

[45 FR 37213, June 2, 1980, as amended at 47 FR 50496, Nov. 8, 1982]

PART 451—TESTING AND APPROVAL OF CONTAINERS

Subpart A—Approval of Existing Containers

Sec.
451.1 Application for approval.
451.3 Action by Approval Authority.
451.5 Resubmission or appeal.
451.7 Alternative approval of existing containers.

Subpart B—Approval of New Containers

451.11 Application for approval-general.
451.12 Application for approval by design type.
451.13 Action by approval authority-approval by design type.
451.14 Alternative approval of new containers by design type.
451.15 Application for individual approval.
451.16 Action by approval authority-individual approval.
451.18 Review of denials of approval.

Subpart C—Safety Approval Plate

451.21 Safety approval plate required.
451.23 Plate specifications.
451.25 Required information.

AUTHORITY: Sec. 4, 91 Stat. 1475 (46 U.S.C. 1503); 49 CFR 1.46(n).

SOURCE: 45 FR 37214, June 2, 1980, unless otherwise noted.

Subpart A—Approval of Existing Containers

§ 451.1 Application for approval.

(a) Any owner of an existing container may apply for approval to the Commandant (G–MVI), U.S. Coast Guard, Washington, DC 20593 or to any Approval Authority.

(b) Each application must include the following for each container:

(1) Date and place of manufacture.

(2) Manufacturer's identification number, if available.

(3) Maximum operating gross weight capacity.

(4) Allowable stacking weight for 1.8G (1.8 x Gross weight in kilograms or pounds).

NOTE: This value is the total load the container is designed to support when subjected to a vertical acceleration of 1.8G.

(5) A statement that the owner possesses documentary evidence that:

(i) Container of this type has been safely used in marine or inland transport for a period of at least two years; or

(ii) The container was manufactured to a design type which had been tested and found to comply with the technical conditions set out in Annex II to the convention with the exception of those technical conditions relating to the end-wall and side-wall strength tests; or

(iii) The container was constructed to standards that were equivalent to the technical conditions set out in Annex II to the convention with the exception of those technical conditions relating to end-wall and side-wall strength tests.

(6) A certification by the owner, or, if the owner is a corporation, partnership or unincorporated association, by a person authorized to make such statements for the organization, that the information provided in the application is true and correct.

[45 FR 37214, June 2, 1980, as amended at 47 FR 50496, Nov. 8, 1982]

§451.3 Action by Approval Authority.

(a) The Approval Authority (or the Chief, Merchant Vessel Inspection Division, Office of Merchant Marine Safety, U.S. Coast Guard, if the application was submitted to the Coast Guard) issues to the owner a notice of approval or notifies the owner in writing that approval is denied, setting forth the deficiencies causing denial. Notification of approval entitles the owner to affix a safety approval plate to each container after an examination of each container concerned has been carried out in accordance with part 452 of this subchapter. In the case of an application submitted to the Coast Guard, the Chief, Merchant Vessel Inspection Division, Office of Merchant Marine Safety, U.S. Coast Guard acts on the application within 30 days of receipt of the application.

[45 FR 37214, June 2, 1980, as amended at 47 FR 50496, Nov. 8, 1982]

§451.5 Resubmission or appeal.

(a) Upon receipt of a denial of approval for certain containers, an owner may correct the noted deficiencies and resubmit the application without prejudice.

(b) An applicant aggrieved by a decision of an approval authority may obtain review of the decision by the Chief, Merchant Vessel Inspection Division, Office of Merchant Marine Safety, U.S. Coast Guard. The decision of the Chief, Merchant Vessel Inspection Division, Office of Merchant Marine Safety, U.S. Coast Guard is a final agency action.

[45 FR 37214, June 2, 1980, as amended at 47 FR 50496, Nov. 8, 1982]

§451.7 Alternative approval of existing containers.

(a) Existing containers that do not qualify for approval under this subpart may be presented for approval under the provisions of subpart B of this part. For such containers, the requirements of subpart B of this part relating to the end and sidewall strength tests do not apply. Upon showing that the containers have performed satisfactorily in service, the applicant may omit the presentation of drawings and testing, other than the lifting and floor strength test, if permitted by the approval authority.

Subpart B—Approval of New Containers

§451.11 Application for approval-general.

(a) An owner of a new container, or a manufacturer acting on behalf of an owner, may apply for approval to any approval authority.

§451.12 Application for approval by design type.

(a) For approval of new containers by design type, each application must include the following:

(1) Engineering drawings and plans showing platform, end framing, welds and hardware, connections of crossmembers, top and bottom rails, roof bows, detailed subassemblies of major structural components and attachments, and any other plans and drawings required by the approval authority.

(2) Design and material specifications including type and size of materials.

Material specifications of the safety approval plate must also be given.

(3) The manufacturer's identification number assigned to each container in the type series.

(4) The identification code assigned to each container in the series by the owner, lessee, of bailee responsible for maintenance.

(5) The written assurance from the manufacturer, that the manufacturer will:

(i) Produce to the approval authority such containers as the approval authority may wish to examine;

(ii) Advise the approval authority of any change in the design or specification and await its approval before affixing the Safety Approval Plate to the container;

(iii) Affix the Safety Approval Plate to each container in the design type and to no others;

(iv) Keep a record of containers manufactured to the approved design type containing at least the manufacturer's identification numbers, date of delivery, and names and addresses of customers to whom the containers are delivered; and

(v) Supply to the approval authority the information contained in paragraphs (a)(3) and (4) of this section if not available at the time of original application.

(6) A statement as to whether this design type has been examined by any approval authority previously and judged unacceptable. Affirmative statements must be documented with the name of the approving authority, the reason for nonacceptance, and the nature of modifications made to the design type.

§ 451.13 Action by approval authority-approval by design type.

(a) The approval authority arranges with the manufacturer, with notification to the owner, to witness the prototype tests required by the convention, and to examine any number of containers that the approval authority considers appropriate. Upon witnessing successful completion of prototype tests and examination of several containers the approval authority issues to the owner, a notice of approval which authorizes the attachment of safety approval plates to the containers. Absence of individual inspections will not relieve the manufacturer of any responsibility to maintain proper quality control. If a prototype container fails to pass the tests, the approval authority may require testing of as many further representative containers as necessary to ensure the adequacy of the design.

§ 451.14 Alternative approval of new containers by design type.

(a) New containers manufactured before June 16, 1978 without being approved under the preceding section may be approved by submission to an approval authority of an application corresponding to that required under § 451.1(b) for existing containers. All new containers so approved must have safety approval plates affixed and receive their first periodic examination in accordance with the procedures prescribed in § 452.3 by January 1, 1985.

[47 FR 50496, Nov. 8, 1982]

§ 451.15 Application for individual approval.

(a) For approval of new containers by individual approval, each application must include the following:

(1) The manufacturer's identification number.

(2) The identification code of the owner, lessee, or bailee responsible for maintenance of the container.

§ 451.16 Action by approval authority-individual approval.

(a) The approval authority arranges with the manufacturer or owner to witness testing in accordance with Annex II to the convention. Upon witnessing successful completion of the tests, the approval authority issues to the owner a notice of approval that authorizes the attachment of a safety approval plate.

§ 451.18 Review of denials of approval.

(a) An applicant aggrieved by a decision of an approval authority may obtain review of the decision by the Chief, Merchant Vessel Inspection Division, Office of Merchant Marine Safety, U.S. Coast Guard. The decision of the Chief, Merchant Vessel Inspection Division, Office of Merchant Marine

Safety, U.S. Coast Guard is a final agency action.

[45 FR 37214, June 2, 1980, as amended at 47 FR 50496, Nov. 8, 1982]

Subpart C—Safety Approval Plate

§451.21 Safety approval plate required.

(a) The safety approval plate must be supplied by the owner or manufacturer.

§451.23 Plate specifications.

(a) The safety approval plate must be of the size and in the format specified in the appendix to Annex I to the convention.

(b) The safety approval plate must be:

(1) Designed to withstand and remain legible after a 15 minute exposure to a medium intensity fire producing a temperature of 1,000 °F (540 °C), when mounted on the specified material of construction of the container.

(2) Designed to resist the corrosive effects of its environment, both at sea and ashore, so as to remain legible for the working life of the container.

(3) Designed to have a legible life expectancy equal to or greater than the life expectancy of the container to which the plate is affixed.

§451.25 Required information.

(a) The safety approval number appearing on line 1 of the safety approval plate must be of the form ''USA/(approval number, which includes the approval authority identification code)/(year in which approval was granted).''

(b) The date upon which approval was granted must be the same for all containers of a design-type or type-series covered by one notice of approval.

(c) The safety approval number must be the same for all containers of a design-type or type-series covered by one notice of approval.

(d) The owner's International Organization for Standardization (ISO) alpha numeric identification numbers may be used in place of the manufacturer's identification numbers on line 3 of the safety approval plate. If owner's identification numbers are used and the manufacturer's are available, the owner shall keep records correlating the owner's identification numbers used with the manufacturer's number. If a container marked with owner's identification numbers changes ownership, and the owner's identification number is changed as a result, the new owner must add the new owner's identification number, following the original owner's identification number on line 3 of the safety approval plate. In the event that the new owner's identification number cannot be legibly added to line 3 of the safety approval plate following the original owner's identification number, the new owner is authorized to put a new safety approval plate on the freight container provided that all the information contained on the original safety approval plate is retained in the owners files.

PART 452—EXAMINATION OF CONTAINERS

Sec.

452.1 Periodic examination required.
452.3 Elements of periodic examinations.
452.5 Examinations made in conjunction with other inspections.
452.7 Continuous examination program.
452.9 Elements of a continuous examination program.

AUTHORITY: Sec. 4, 91 Stat. 1475 (46 U.S.C. 1503); 49 CFR 1.46(n).

§452.1 Periodic examination required.

(a) Except as provided for in §452.7, each owner of an approved container subject to this part shall examine the container or have it examined in accordance with the procedures prescribed in §452.3 at intervals of not more than 30 months, except that for containers approved as new containers the interval from the date of manufacture to the date of the first examination must not exceed five years. For containers approved, examined and plated as existing containers before January 1, 1985 and containers approved and plated as new containers before January 1, 1985, the subsequent examination must be carried out in accordance with the following schedule:

Date of initial plating	Subsequent examination
Existing containers before Sept. 30, 1981 and new containers before Dec. 31, 1978.	Before Jan. 1986.
Existing containers between Oct. 1, 1981 and Sept. 30, 1982 and new containers between Jan. 1, 1979 and Dec. 31, 1979.	Before May 1986.
Existing containers between Oct. 1, 1982 and Sept. 30, 1983 and new containers between Jan. 1, 1980 and Dec. 31, 1980.	Before Sept. 1986.
Existing containers between Oct. 1, 1983 and Dec. 31, 1984 and new containers between Jan. 1, 1981 and Dec. 31, 1981.	Before Jan. 1987.

NOTE: Containers plated under § 451.14 are considered existing containers in the above schedule.

(b) Upon completion of an examination required by this part, the owner shall mark on the safety approval plate, or on the container itself as close as practicable to the safety approval plate, the month and year before which the container must next be examined. This marking must be on all containers by January 1, 1987. The marking may be by a decal, sticker, stencil, or other means so long as it is capable of remaining legible for at least 24 months. Affixing such a marking to a container that has not been examined in accordance with § 452.3 constitutes a misrepresentation in a matter within the jurisdiction of an agency of the United States, and makes the owner punishable under 18 U.S.C. 1001.

(c) The owner of containers subject to this section shall have those containers examined in accordance with the program prescribed in this section regardless of whether the examinations are preformed within or outside the United States.

[45 FR 37216, June 2, 1980, as amended at 47 FR 50496, Nov. 8, 1982; 49 FR 15562, Apr. 19, 1984]

§ 452.3 Elements of periodic examinations.

(a) Periodic examinations required by § 452.1 must conform to the following minimum requirements:

(1) Each examination must include a detailed visual inspection for defects such as cracks, failures, corrosion, missing or deteriorated fasteners, and any other safety related deficiency or damage which could place any person in danger. Any such deficiencies disclosed by the examination must be corrected by the owner before the container is continued in service.

(2) Each examination must take into account the particular characteristics of various kinds (types) of containers and materials of construction.

(3) Each examination must be performed by qualified personnel, trained and experienced in the detection of container structural damage.

(4) The examinations must be scheduled so as to allow adequate time for thorough performance.

(5) Each examination must apply owner established or industry accepted pass/fail criteria to determine whether a container has any deficiency that must be remedied before the container is returned to service.

(b) Examinations must be documented, and the records retained by the owner, until the next examination is completed and recorded. The records must include in addition to identification of the container, a record of the date of last examination and a means of identifying the examiner. The records must be maintained in an office under the control of the owner and be made available for inspection by the Coast Guard upon demand. If the original records are maintained outside the United States, its territories or possessions, supplementary records must be available in written or data processing form to be produced on demand of the Commandant or his representative.

[45 FR 37216, June 2, 1980]

§ 452.5 Examinations made in conjunction with other inspections.

(a) Periodic examinations may be made in conjunction with or as part of routine change-of-custody inspections, or in any other manner convenient to the owner so long as the examinations conform to the requirements of § 452.3.

[45 FR 37216, June 2, 1980]

§ 452.7 Continuous examination program.

(a) In lieu of a periodic examination under § 452.1, each owner of an approved container meeting § 450.5 may examine the container or have it examined

using an approved continuous examination program. An owner must submit the continuous examination program for approval to the Commandant (G–MVI), United States Coast Guard, 2100 Second Street, SW., Washington, DC 20593. When submitting a continuous examination program for approval the owner must show the continuous examination complies with §452.9.

(b) The owner must mark the container with the letters ''ACEP/USA/(year continuous examination program is approved)'' to indicate the container is being periodically examined under an approved continuous examination program. This marking must be as close as practicable to the safety approval plate. This marking must be on all containers covered by a continuous examination program by January 1, 1987.

(c) The owner of containers subject to this section shall have those containers examined in accordance with the program prescribed in this section regardless of whether the examinations are performed within or outside the United States.

(The information collection requirements contained in paragraphs (a) and (b) have been approved by the Office of Management and Budget under OMB control number 2115–0094)

[49 FR 15562, Apr. 19, 1984]

§452.9 Elements of a continuous examination program.

(a) Examinations required by §452.7 must conform to the following minimum requirements:

(1) A thorough examination that must include a detailed visual inspection for defects such as cracks, failures, corrosion, missing or deteriorated fasteners, and any other safety related deficiency or damage that could place any person in danger. Any such deficiencies disclosed by the examination must be corrected by the owner before the container is continued in service. A thorough examination must be done each time a container undergoes a major repair, refurbishment or on-hire/off-hire interchange. In no case is the time period between thorough examinations to exceed 30 months.

(2) Each thorough examination must be performed by qualified personnel, trained and experienced in the detection of container structural damage.

(3) Each thorough examination must apply owner established or industry accepted pass/fail criteria to determine whether a container has any deficiency that must be remedied before the container is returned to service.

(b) Thorough examinations must be documented, and the records retained by the owner, until the next examination is completed and recorded. The records must include in addition to identification of the container, a record of the date of last examination and a means of identifying the examiner. The records must be maintained in an office under the control of the owner and be made available for inspection by the Coast Guard upon demand. If the original records are maintained outside the United States, its territories or possessions, supplementary records must be available in written or data processing form to be produced on demand of the Commandant or his representative.

(The information collection requirements contained in paragraph (b) have been approved by the Office of Management and Budget under OMB control number 2115–0094)

[49 FR 15562, Apr. 19, 1984]

PART 453—CONTROL AND ENFORCEMENT

Sec.

453.1 Unsafe and noncomplying containers subject to detention or control.
453.3 Detention orders and other orders.
453.5 Termination of detention orders and other orders.
453.7 Appeal provisions.

AUTHORITY: Sec. 4, 91 Stat. 1475 (46 U.S.C. 1503); 49 CFR 1.46(n).

§453.1 Unsafe and noncomplying containers subject to detention or control.

(a) Any container used in or offered for movement in international transport which does not have a valid safety approval plate attached to it is subject to detention or other control by a District Commander or Captain of the Port. However, upon receipt of evidence that a container which does not have a valid safety approval plate attached to it meets the standards of the

convention, the District Commander or Captain of the Port may authorize limited movement of such container under conditions he deems appropriate. This paragraph becomes effective on January 3, 1979 for new containers and on January 1, 1985 for existing containers.

(b) If a District Commander or Captain of the Port finds that a container used in or offered for movement in international transport, even though it has a valid safety approval plate attached to it, is in a condition that creates an obvious risk to safety, he issues a detention order causing the container to be removed from service until it is restored to a safe condition. In addition to removing a container from transport, a detention order may require any special handling, including unloading prior to movement, necessary to ensure safety.

(c) If a District Commander or Captain of the Port finds that a container used or offered for movement in international transport has not been timely examined, the District Commander or Captain of the Port affixes to the container, at a place on the container where it will be readily noticeable to anyone loading or unloading the container, a mark or tag indicating that the container must be examined before being reloaded and again used in international transport. The mark or tag affixed by the District Commander or Captain of the Port indicates the place and the date on which it was affixed, and is capable of remaining legible and in place for at least 12 months. Such mark or tag must not be removed until the container is examined in accordance with § 452.3 of this subchapter. If a District Commander or Captain of the Port finds that container marked or tagged as provided for in this paragraph was reloaded and used or offered for movement in international transport without having been examined, the District Commander or Captain of the Port issues a detention order causing the container to be removed from service until it is brought into compliance.

[45 FR 37217, June 2, 1980, as amended at 47 FR 50496, Nov. 8, 1982]

§ 453.3 Detention orders and other orders.

(a) The terms of any detention order or other order issued under § 453.1, to the maximum extent practicable, make provisions to avoid loss or damage to cargo.

(b) Written notice of any detention order or other order issued under § 453.1 is given immediately to the terminal operator, stevedore, or other person having actual control over the container involved. Prompt notification is also given to the owner of the container, or his agent. The notification identifies the container involved, its location, and describes the condition which gave rise to the order.

[45 FR 37217, June 2, 1980]

§ 453.5 Termination of detention orders and other orders.

(a) When a container, which is the subject of a detention order or other order, is restored to a safe condition or otherwise brought into compliance, it must be examined in accordance with § 452.3 and a new re-examination date marked on the container in accordance with § 452.1(b) of this subchapter.

(b) The owner or the owner's agent shall notify the District Commander or Captain of the Port who issue the order, in writing, that the container has been brought into compliance. Upon giving such notice, the owner, or his agent, may return the container to service.

[45 FR 37217, June 2, 1980]

§ 453.7 Appeal provisions.

(a) The owner, his agent, or the custodian of a container subject to a detention order or other order may petition the Chief, Merchant Vessel Inspection Division, Office of Merchant Marine Safety, U.S. Coast Guard to review that order.

(b) The Chief, Merchant Vessel Inspection Division, Office of Merchant Marine Safety, U.S. Coast Guard requires independent surveys to determine the extent of deficiencies, if necessary. Upon completion of his review, including review of the results of any required independent surveys, the

Chief, Merchant Vessel Inspection Division, Office of Merchant Marine Safety, U.S. Coast Guard affirms, sets aside, or modifies the order.

(c) The owner of a container is liable for any costs incident to a petition for review including any independent surveys, and for any other costs incident to or resulting from detention or other control of a container.

(d) Unless otherwise determined by the Chief, Merchant Vessel Inspection Division, Office of Merchant Marine Safety, U.S. Coast Guard, a detention order or other order remains in effect pending the outcome of any petition or appeal of that order.

(e) The Chief, Merchant Vessel Inspection Division, Office of Merchant Marine Safety, U.S. Coast Guard acts on all appeals within ten days of receipt.

[45 FR 37217, June 2, 1980, as amended at 47 FR 50496, Nov. 8, 1982]

CHAPTER V—NATIONAL HIGHWAY TRAFFIC SAFETY ADMINISTRATION, DEPARTMENT OF TRANSPORTATION

Part		*Page*
501	Organization and delegation of powers and duties	23
509	OMB control numbers for information collection requirements	28
510	Information gathering powers	29
511	Adjudicative procedures	35
512	Confidential business information	60
520	Procedures for considering environmental impacts	67
523	Vehicle classification	83
525	Exemptions from average fuel economy standards	86
526	Petitions and plans for relief under the Automobile Fuel Efficiency Act of 1980	90
529	Manufacturers of multistage automobiles	91
531	Passenger automobile average fuel economy standards	95
533	Light truck fuel economy standards	97
535	3-year carryforward and carryback of credits for light trucks	99
537	Automotive fuel economy reports	100
538	Manufacturing incentives for alternative fuel vehicles	106
541	Federal motor vehicle theft prevention standard	109
542	Procedures for selecting lines to be covered by the theft prevention standard	116
543	Exemption from vehicle theft prevention standard	118
544	Insurer reporting requirements	121
551	Procedural rules	126
552	Petitions for rulemaking, defect, and noncompliance orders	128
553	Rulemaking procedures	132
554	Standards enforcement and defects investigation	143
555	Temporary exemption from motor vehicle safety and bumper standards	145

Part		Page
556	Exemption for inconsequential defect or noncompliance	150
557	Petitions for hearings on notification and remedy of defects	152
564	Replaceable light source information	153
565	Vehicle identification number requirements	157
566	Manufacturer identification	162
567	Certification	163
568	Vehicles manufactured in two or more stages	170
569	Regrooved tires	173
570	Vehicle in use inspection standards	174
571	Federal motor vehicle safety standards	184
572	Anthropomorphic test devices	756
573	Defect and noncompliance responsibility and reports	869
574	Tire identification and recordkeeping	875
575	Consumer information regulations	885
576	Record retention	912
577	Defect and noncompliance notification	913
578	Civil and criminal penalties	920
579	Reporting of information and communications about potential defects	923
580	Odometer disclosure requirements	941
581	Bumper standard	951
582	Insurance cost information regulation	954
583	Automobile parts content labeling	956
585	Advanced air bag phase-in reporting requirements	967
586	Side impact phase-in reporting requirements	969
587	Deformable barriers	971
588	Child restraint systems recordkeeping requirements	981
589	Upper interior component head impact protection phase-in reporting requirements	982
590	Tire pressure monitoring system phase-in reporting requirements	984
591	Importation of vehicles and equipment subject to Federal safety, bumper and theft prevention standards	986
592	Registered importers of vehicles not originally manufactured to conform to the Federal motor vehicle safety standards	996
593	Determinations that a vehicle not originally manufactured to conform to the Federal motor vehicle safety standards is eligible for importation	1002
594	Schedule of fees authorized by 49 U.S.C. 30141	1013
595	Retrofit on-off switches for air bags	1017

Part		*Page*
596	Child restraint anchorage system phase-in reporting requirements	1034

CROSS REFERENCE: See 23 CFR, chapter I, subchapter G, Federal Highway Administration, Department of Transportation, for regulations on the certification of vehicle size and weight enforcement and the certification of speed limit enforcement.

PART 501—ORGANIZATION AND DELEGATION OF POWERS AND DUTIES

Sec.
501.1 Purpose.
501.2 General.
501.3 Organization and general responsibilities.
501.4 Succession to Administrator.
501.5 Exercise of authority.
501.6 Secretary's reservations of authority.
501.7 Administrator's reservations of authority.
501.8 Delegations.

AUTHORITY: 49 U.S.C. secs. 105 and 322, delegation of authority at 49 CFR 1.50.

SOURCE: 53 FR 26258, July 12, 1988, unless otherwise noted.

§ 501.1 Purpose.

This part describes the organization of the National Highway Traffic Safety Administration (NHTSA) through Associate Administrator, Regional Administrator and Staff Office Director levels and provides for the performance of duties imposed on, and the exercise of powers vested in, the Administrator of the NHTSA (hereafter referred to as the ''Administrator'').

§ 501.2 General.

The Administrator is delegated authority by the Secretary of Transportation (49 CFR 1.50) to:

(a) Carry out the following chapters or sections of Title 49 of the United States Code:

(1) Chapter 301—Motor Vehicle Safety.

(2) Chapter 303—National Driver Register.

(3) Chapter 305—National Automobile Title Information System.

(4) Chapter 321—General.

(5) Chapter 323—Consumer Information.

(6) Chapter 325—Bumper Standards.

(7) Chapter 327—Odometers.

(8) Chapter 329—Automobile Fuel Economy.

(9) Chapter 331—Theft Prevention.

(10) Section 20134(a), with respect to the laws administered by the National Highway Traffic Safety Administrator pertaining to highway, traffic and motor vehicle safety.

(b) Carry out 23 U.S.C. chapter 4, HIGHWAY SAFETY, as amended, except for section 409 and activities relating to highway design, construction and maintenance, traffic control devices, identification and surveillance of accident locations, and highway-related aspects of pedestrian and bicycle safety.

(c) Exercise the authority vested in the Secretary by section 210(2) of the Clean Air Act, as amended (42 U.S.C. 7544(2)).

(d) Carry out the Act of July 14, 1960, as amended (23 U.S.C. 313 note).

(e) Administer the following sections of Title 23, United States Code, with the concurrence of the Federal Highway Administrator:

(1) Section 141, as it relates to certification of the enforcement of speed limits.

(2) Section 153.

(3) Section 154(a), (b), (d), and (e).

(4) Section 158.

(f) Carry out the consultation functions vested in the Secretary by Executive Order 11912 (3 CFR, 1976 Comp., p. 114), as amended.

[60 FR 43029, Aug. 18, 1995]

§ 501.3 Organization and general responsibilities.

The National Highway Traffic Safety Administration consists of a headquarters organization located in Washington, DC, and a unified field organization consisting of ten geographic regions. The organization of, and general spheres of responsibility within, the NHTSA are as follows:

(a) *Office of the Administrator*—(1) *Administrator*. (i) Represents the Department and is the principal advisor to the Secretary in all matters related to chapters 301, 303, 305, 321, 323, 325, 327, 329, and 331 of Title 49 U.S.C.; 23 U.S.C. chapter 4, except section 409; as each relates to highway safety, sections 141, 153, 154(a), (b), (d) and (e), and 158 of Title 23 U.S.C.; and such other authorities as are delegated by the Secretary of Transportation (49 CFR 1.50);

(ii) Establishes NHTSA program policies, objectives, and priorities and directs development of action plans to accomplish the NHTSA mission;

(iii) Directs, controls, and evaluates the organization, program activities,

performance of NHTSA staff, program and field offices;

(iv) Approves broad legislative, budgetary, fiscal and program proposals and plans; and

(v) Takes management actions of major significance, such as those relating to changes in basic organization pattern, appointment of key personnel, allocation of resources, and matters of special political or public interest or sensitivity.

(2) *Deputy Administrator*. Assists the Administrator in discharging responsibilities. Directs and coordinates the Administration's management and operational programs, and related policies and procedures at headquarters and in the field. Provides policy direction and executive direction to the Associate Administrator for State and Community Services.

(3) *Executive Director*. As the principal advisor to the Administrator and Deputy Administrator, provides direction on internal management and mission support programs. Provides executive direction over the Senior Associate Administrators.

(4) *Director, Executive Secretariat*. Provides a central facilitative staff that administers an executive correspondence program and maintains policy files for the Administrator and Deputy Administrator, and services and support to committees as designated by the Administrator.

(5) *Director, Office of Civil Rights*. As principal staff advisor to the Administrator and Deputy Administrator on all matters pertaining to civil rights, acts as Director of Equal Employment Opportunity, Contracts Compliance Officer and Title VI (Civil Rights Act of 1964) Coordinator; assures Administration-wide compliance with related laws, Executive Orders, regulations and policies; and provides assistance to the Office of the Secretary in investigating and adjudicating formal complaints of discrimination.

(6) *Director, Intergovernmental Affairs*. As the principal advisor to the Administrator and Deputy Administrator on all intergovernmental matters, including communications with Congress, communicates agency policy and coordinates with the Chief Counsel on legislative issues affecting the agency.

(b) *Chief Counsel*. As chief legal officer, provides legal services for the Administrator and the Administration; prepares litigation for the Administration; effects rulemaking actions; issues subpoenas; and serves as coordinator on legislative affairs.

(c) *Senior Associate Administrators*—(1) *Senior Associate Administrator for Policy and Operations*. As the principal advisor to the Administrator and Deputy Administrator with regard to core administrative and support services, provides direction and internal management and mission support for such activities. Provides executive direction over the Associate Administrator for Advanced Research and Analysis, the Associate Administrator for Administration, the Associate Administrator for Planning, Evaluation and Budget, the Chief Information Officer and the Office of Communications and Consumer Information.

(2) *Senior Associate Administrator for Vehicle Safety*. As the principal advisor to the Administrator and Deputy Administrator with regard to rulemaking, enforcement and applied research, provides direction and internal management and mission support for such activities. Provides executive direction over the Associate Administrator for Rulemaking, the Associate Administrator for Enforcement, and the Associate Administrator for Applied Research.

(3) *Senior Associate Administrator for Traffic Injury Control*. As the principal advisor to the Administrator and Deputy Administrator with regard to programs to reduce traffic injury, provides direction and internal management and mission support for such activities. Provides executive direction over the Associate Administrator for Program Development and Delivery and the Associate Administrator for Injury Control Operations and Resources.

[53 FR 26258, July 12, 1988, as amended at 58 FR 12545, Mar. 5, 1993; 60 FR 15504, Mar. 24, 1995; 60 FR 43029, Aug. 18, 1995; 67 FR 44083, July 1, 2002]

EFFECTIVE DATE NOTE: At 67 FR 44085, July 1, 2002, § 501.3 was amended by removing and reserving paragraph (a)(3), effective Oct. 3, 2002.

§501.4 Succession to Administrator.

The following officials, in the order indicated, shall act in accordance with the requirements of 5 U.S.C. 3346–3349 as Administrator of the National Highway Traffic Safety Administration, in the case of the absence or disability or in the case of a vacancy in the office of the Administrator, until a successor is appointed:

(a) Deputy Administrator;

(b) Executive Director;

(c) Chief Counsel;

(d) Senior Associate Administrator for Policy and Operations;

(e) Senior Associate Administrator for Vehicle Safety; and

(f) Senior Associate Administrator for Traffic Injury Control.

[67 FR 44084, July 1, 2002]

EFFECTIVE DATE NOTE: At 67 FR 44085, July 1, 2002, §501.4 was revised, effective Oct. 3, 2002. For the convenience of the user, the revised text is set forth as follows:

§501.4 Succession to Administrator.

The following officials, in the order indicated, shall act in accordance with the requirements of 5 U.S.C. 3346–3349 as Administrator of the National Highway Traffic Safety Administration, in the case of the absence or disability or in the case of a vacancy in the office of the Administrator, until a successor is appointed:

(a) Deputy Administrator;

(b) Chief Counsel;

(c) Senior Associate Administrator for Policy and Operations;

(d) Senior Associate Administrator for Vehicle Safety; and

(e) Senior Associate Administrator for Traffic Injury Control.

§501.5 Exercise of authority.

(a) All authorities lawfully vested in the Administrator and reserved to him/her in this Regulation or other NHTSA directives may be exercised by the Deputy Administrator and, in the absence of both Officials, by the Executive Director, unless specifically prohibited.

(b) In exercising the powers and performing the duties delegated by this part, officers of the NHTSA and their delegates are governed by applicable laws, executive orders, regulations, and other directives, and by policies, objectives, plans, standards, procedures, and limitations as may be issued from time to time by or on behalf of the Secretary of Transportation, the Administrator, Deputy Administrator and Executive Director or, with respect to matters under their jurisdictions, by or on behalf of the Associate Administrators, Regional Administrators, and Directors of Staff Offices.

(c) Each officer to whom authority is delegated by this part may redelegate and authorize successive redelegations of that authority subject to any conditions the officer prescribes. Redelegations of authority shall be in written form and shall be published in the FEDERAL REGISTER when they affect the public.

(d) Each officer to whom authority is delegated will administer and perform the functions described in the officer's respective functional statements.

[53 FR 26258, July 12, 1988, as amended at 58 FR 12545, Mar. 5, 1993]

§501.6 Secretary's reservations of authority.

The authorities reserved to the Secretary of Transportation are set forth in subpart 1.44 of part 1 and in part 95 of the regulations of the Office of the Secretary of Transportation in subtitle A of this title (49 CFR parts 1 and 95).

§501.7 Administrator's reservations of authority.

The delegations of authority in this part do not extend to the following authority which is reserved to the Administrator and, in those instances when the office of the Administrator is vacant due to death or resignation, or when the Administrator is absent as provided by §501.5(a), to the Deputy Administrator or Executive Director:

(a) The authority under chapter 301—Motor Vehicle Safety—of Title 49 of the United States Code to:

(1) Issue, amend, or revoke final federal motor vehicle safety standards and regulations;

(2) Make final decisions concerning alleged safety-related defects and noncompliances with Federal motor vehicle safety standards;

(3) Grant or renew temporary exemptions from federal motor vehicle safety standards; and

(4) Grant or deny appeals from determinations upon petitions for inconsequential defect or noncompliance.

(b) The authority under 23 U.S.C. chapter 4, as amended, to:

(1) Apportion authorization amounts and distribute obligation limitations for State and community highway safety programs under 23 U.S.C. 402;

(2) Approve the initial awarding of alcohol incentive grants to the States authorized under 23 U.S.C. 408, and drunk driving prevention grants to the States authorized under 23 U.S.C. 410;

(3) Issue, amend, or revoke uniform State and community highway safety guidelines, and, with the concurrence of the Federal Highway Administrator, designate priority highway safety programs, under 23 U.S.C. 402;

(4) Fix the rate of compensation for non-government members of agency sponsored committees which are entitled to compensation.

(c) The authority under chapters 321, 323, 325, and 329 of Title 49 of the United States Code to:

(1) Issue, amend, or revoke final rules and regulations, except for final rules issued under section 32902(d); and

(2) Assess civil penalties and approve manufacturer fuel economy credit plans under chapter 329.

(d) The authority under sections 141, 153, 154 and 158 of Title 23 of the United States Code, with the concurrence of the Federal Highway Administrator, to disapprove any State certification or to impose any sanction or transfer on a State for violations of the National Maximum Speed Limit, Safety Belt and Motorcycle Helmet Use Requirements, or the National Minimum Drinking Age.

[60 FR 43030, Aug. 18, 1995]

§ 501.8 Delegations.

(a) *Deputy Administrator*. The Deputy Administrator is delegated authority to act for the Administrator, except where specifically limited by law, order, regulation, or instructions of the Administrator. The Deputy Administrator is delegated authority to provide executive direction to the Associate Administrator for State and Community Services and the Director of International Harmonization, and assist the Administrator in providing executive direction to all organizational elements of NHTSA.

(b) *Executive Director*. The Executive Director is delegated line authority for executive direction over the Senior Associate Administrators.

(c) *Director, Office of Civil Rights*. The Director, Office of Civil Rights is delegated authority to:

(1) Act as the NHTSA Director of Equal Employment Opportunity.

(2) Act as NHTSA Contracts Compliance Officer.

(3) Act as NHTSA coordinator for matters under Title VI of the Civil Rights Act of 1964 (42 U.S.C. 2000d et seq.), Executive Order 12250 (3 CFR, 1980 Comp., p. 298), and regulations of the Department of Justice.

(d) *Chief Counsel*. The Chief Counsel is delegated authority to:

(1) Exercise the powers and perform the duties of the Administrator with respect to setting of odometer regulations authorized under 49 U.S.C. chapter 327, and with respect to providing technical assistance and granting extensions of time to the states under 49 U.S.C. 32705.

(2) Establish the legal sufficiency of all investigations conducted under the authority of the following chapters of Title 49 of the United States Code: chapter 301; chapter 323; chapter 325; chapter 327; chapter 329; and chapter 331, and to compromise any civil penalty or monetary settlement in an amount of $25,000 or less resulting from a violation of any of these chapters.

(3) Exercise the powers of the Administrator under 49 U.S.C. 30166 (c), (g), (h), (i), and (k).

(4) Issue subpoenas, after notice to the Administrator, for the attendance of witnesses and production of documents pursuant to chapters 301, 323, 325, 327, 329, and 331 of Title 49 of the United States Code.

(5) Issue authoritative interpretations of the statutes administered by NHTSA and the regulations issued by the agency.

(e) *Senior Associate Administrator for Policy and Operations*. The Senior Associate Administrator for Policy and operations is delegated authority for executive direction of the Associate Administrator for Advanced Research and Analysis; the Associate Administrator for Administration; the Associate Administrator for Planning, Evaluation,

and Budget; the Chief Information Officer; and the Director of Communications and Consumer Information. To carry out this direction, the Senior Associate Administrator for Policy and Operations is delegated authority, except for authority reserved to the Administrator, to direct the NHTSA planning and evaluation system in conjunction with Departmental requirement and planning goals; to coordinate the development of the Administrator's plans, policies, budget, and programs, and analyses of their expected impact, and their evaluation in terms of the degree of goal achievement; and to perform independent analyses of proposed Administration regulatory, grant, legislative, and program activities. Except for authority reserved to the Senior Associate Administrator for Vehicle Safety, the Senior Associate Administrator for Policy and Operations is delegated authority to develop and conduct research and development programs and projects necessary to support the purposes of Chapters 301, 323, 325, 327, 329, and 331 of title 49, United States Code, and Chapter 4 of title 23, United States Code, as amended, in coordination with the Senior Associate Administrator for Vehicle Safety and the Chief Counsel. The Senior Associate Administrator for Policy and Operations is also delegated authority to exercise procurement authority with respect to NHTSA requirements; administer and conduct NHTSA's personnel management activities; administer NHTSA financial management programs, including systems of funds control and accounts of all financial transactions; and conduct administrative management services in support of NHTSA missions and programs.

(f) *Senior Associate Administrator for Vehicle Safety*. The Senior Associate Administrator for Vehicle Safety is delegated authority for executive direction of the Associate Administrator for Rulemaking, the Associate Administrator for Enforcement and the Associate Administrator for Applied Research. The Senior Associate Administrator for Vehicle Safety exercises executive direction with respect to the setting of standards and regulations for motor vehicle safety, fuel economy, theft prevention, consumer information, and odometer fraud. To carry out this direction, the Senior Associate Administrator for Vehicle Safety is delegated authority, except for authority reserved to the Administrator or the Chief Counsel, to exercise the powers and perform the duties of the Administrator with respect to the setting of motor vehicle safety and theft prevention standards, average fuel economy standards, procedural regulations, and the development of consumer information and odometer fraud regulations authorized under Chapters 301, 323, 325, 327, 329, and 331 of title 49, United States Code. Except for authority reserved to the Senior Associate Administrator for Policy and Operations, the Senior Associate Administrator for Vehicle Safety is delegated authority to develop and conduct research and development programs and projects necessary to support the purposes of Chapters 301, 323, 325, 327, 329, and 331 of title 49, United States Code, and Chapter 4 of title 23, United States Code, as amended, in coordination with the appropriate Associate Administrators, and the Chief Counsel. The Senior Associate Administrator for Vehicle Safety is also delegated authority to respond to a manufacturer's petition for exemption from 49 U.S.C. Chapter 301's notification and remedy requirements in connection with a defect or noncompliance concerning labeling errors; extend comment periods (both self-initiated and in response to a petition for extension of time) for noncontroversial rulemakings; make technical amendments or corrections to a final rule; extend the effective date of a noncontroversial final rule; administer the NHTSA enforcement program for all laws, standards, and regulations pertinent to vehicle safety, fuel economy, theft prevention, damageability, consumer information and odometer fraud, authorized under Chapters 301, 323, 325, 327, 329, and 331 of title 49, United States Code; issue regulations relating to the importation of motor vehicles under sections 30141 through 30147 of title 49, United States Code; and grant and deny petitions for import eligibility determinations submitted to NHTSA by motor vehicle manufacturers and registered importers under 49 U.S.C. 30141.

(g) *Senior Associate Administrator for Traffic Injury Control.* The Senior Associate Administrator for Traffic Injury Control is delegated authority for executive direction of the Associate Administrator for Program Development and Delivery and the Associate Administrator for Injury Control Operations and Resources. To carry out this direction, the Senior Associate Administrator for Traffic Injury Control is delegated authority, except for authority reserved to the Administrator, over programs with respect to: Chapter 4 of title 23, United States Code, as amended; the authority vested by section 210(2) of the Clean Air Act, as amended (42 U.S.C. 7544(2)); the authority vested by 49 U.S.C. 20134(a), with respect to the laws administered by the Administrator pertaining to highway, traffic, and motor vehicle safety; the Act of July 14, 1960, as amended (23 U.S.C. 313 note) and 49 U.S.C. Chapter 303; the authority vested by section 157(g) of title 23, United States Code; the authority vested by sections 153, 154, 157(except paragraph (g)), 161, 163, and 164 of title 23, United States Code, with the concurrence of the Federal Highway Administrator; and secton 209 of the Surface Transportation Assistance Act of 1978 (23 U.S.C. 401 note) as delegated by the Secretary in § 501.2(i). The Senior Associate Administrator for Traffic Injury Control is also delegated authority to exercise the powers and perform the duties of the Administrator with respect to State and community highway safety programs under 23 U.S.C. 402, including approval and disapproval of State highway safety plans and final vouchers, in accordance with the procedural requirements of the Administration; to approve the awarding of alcohol incentive grants to the States under 23 U.S.C. 408 and drunk driving prevention grants under 23 U.S.C. 410, for years subsequent to the initial awarding of such grants by the Administrator; as appropriate for activities benefiting states and communities; and to implement 23 U.S.C. 403.

(h) *Director, Office of Vehicle Safety Compliance, Enforcement.* The Director, Office of Vehicle Safety Compliance, Enforcement, is delegated authority to exercise the powers and perform the duties of the Administrator with respect to granting and denying petitions for import eligibility decisions submitted to NHTSA by motor vehicle manufacturers and registered importers under 49 U.S.C. 30141(a)(1).

[60 FR 43030, Aug. 18, 1995, as amended at 61 FR 26469, May 28, 1996; 67 FR 44084, July 1, 2002]

EFFECTIVE DATE NOTE: At 67 FR 45085, July 1, 2002, § 501.8 was amended by removing and reserving paragraph (b), effective Oct. 3, 2002.

PART 509—OMB CONTROL NUMBERS FOR INFORMATION COLLECTION REQUIREMENTS

Sec.
509.1 Purpose.
509.2 Display.

AUTHORITY: 44 U.S.C. 3507.

§ 509.1 Purpose.

This part collects and displays the control numbers assigned to information collection requirements of NHTSA by the Office of Management and Budget (OMB). NHTSA intends that this part comply with the requirements of 44 U.S.C. 3507(f), which mandates that agencies display a current control number assigned by the Director of the OMB for each agency information collection requirement.

[48 FR 51310, Nov. 8, 1983]

§ 509.2 Display.

49 CFR part or section containing information collection requirement	OMB control No.
Part 512	2127–0025
Part 537	2127–0019
Part 538	2127–0554
Part 541	2127–0510
Part 542	2127–0539
Part 543	2127–0542
Part 544	2127–0547
Section 551.45	2127–0040
Part 552 and Part 527	2127–0046
Part 556	2127–0045
Part 557	2127–0039
Part 566	2127–0043
Consolidated owners' manual requirements for vehicles and equipment (§§ 571.126, 571.205 571.208, 571.210, and 575.105)	2127–0541
Consolidatd labeling requirements for tires and rims (parts 569 and 574, §§ 571.109, 571.110, 571.117, 571,119, and 571.120)	2127–0503
Consolidated VIN and Theft Prevention Standard and Labeling Requirements (parts 541, 565, 567 and § 571.115)	2127–0510
Consolidated lighting requirements (part 564 and § 571.108)	2127–0563
Section 571.106	2127–0052
Section 571.116	2127–0521

49 CFR part or section containing information collection requirement	OMB control No.
Section 571.125	2127–0506
Section 571.205	2127–0038
Section 571.209	2127–0512
Section 571.213	2127–0511
Section 571.214	2127–0558
Section 571.217	2127–0505
Section 571.218	2127–0518
Part 573	2127–0004
Part 574	2127–0050
Part 575 excluding UTQGS	2127–0049
Section 575.104 (UTQGS)	2127–0519
Part 576	2127–0042
Part 580	2127–0047
Part 585	2127–0535
Parts 591 and 592	2127–0002

[57 FR 21215, May 19, 1992]

PART 510—INFORMATION GATHERING POWERS

510.1 Scope and purpose.
510.2 Definitions.
510.3 Compulsory process, the service thereof, claims for confidential treatment, and terms of compliance.
510.4 Subpoenas, generally.
510.5 Information gathering hearings.
510.6 Administrative depositions.
510.7 General or special orders.
510.8 Written requests for the production of documents and things.
510.9 Motions to modify, limit, or quash process.
510.10 Supplementation of responses to process.
510.11 Fees.
510.12 Remedies for failure to comply with compulsory process.

AUTHORITY: Secs. 112 and 119, National Traffic and Motor Vehicle Safety Act 1966, as amended (15 U.S.C. 1401 and 1407); secs. 104, 204, 414, and 505, Motor Vehicle Information and Cost Savings Act, as amended (15 U.S.C. 1914, 1944, 1990d, and 2005); delegation of authority (49 CFR 1.51).

SOURCE: 45 FR 29042, May 1, 1980, unless otherwise noted.

§510.1 Scope and purpose.

This rule governs the use of the information gathering powers of the National Highway Traffic Safety Administration contained in section 112 of the National Traffic and Motor Vehicle Safety Act of 1966, as amended 15 U.S.C. 1401, and sections 104, 204, 414, and 505 of the Motor Vehicle Information and Cost Savings Act, as amended 15 U.S.C. 1914, 1944, 1990d, and 2005.

§510.2 Definitions.

(a) *NHTSA* means the National Highway Traffic Safety Administration.

(b) *Administrator* means the Administrator of the National Highway Traffic Safety Administration.

(c) *Chief Counsel* means the Chief Counsel of the National Highway Traffic Safety Administration.

(d) *Deputy Administrator* means the Deputy Administrator of the National Highway Traffic Safety Administration.

(e) *Person* includes agents, officers, and employees of sole proprietorships, partnerships, corporations, and other entities.

[45 FR 29042, May 1, 1980; 45 FR 32001, May 15, 1980]

§510.3 Compulsory process, the service thereof, claims for confidential treatment, and terms of compliance.

(a) NHTSA may use any of the following means to conduct investigations, inspections, or inquiries to obtain information to carry out its functions under the National Traffic and Motor Vehicle Safety Act of 1966, as amended, 15 U.S.C. 1381 *et seq.*, and the Motor Vehicle Information and Cost Savings Act, as amended, 15 U.S.C. 1901 et seq.:

(1) Subpoenas;

(2) Information gathering hearings;

(3) Administrative depositions;

(4) General or special orders; and

(5) Written requests for the production of documents and things.

(b) A person, sole proprietorship, partnership, corporation, or other entity served with compulsory process under this part shall be provided with the following information at the time of the service:

(1) The name of the person, sole proprietorship, partnership, corporation, or other entity to which the process is addressed;

(2) The statutory provision under which the compulsory process is issued;

(3) The date, time, and place of return;

(4) A brief statement of the subject matter of the investigation, inspection, or inquiry; and

(5) In the case of a subpoena *duces tecum* or a written request for the production of documents and things, a reasonably specific description of the documents or things to be produced.

(c) Service of the compulsory processes specified in paragraph (a) of this section is effected:

(1) By personal service upon the person, agent-in-charge, or agent designated to receive process under 15 U.S.C. 1399(e) of the sole proprietorship, partnership, corporation or other entity being investigated, inspected, or inquired of; or

(2) By mail (registered or certified) or delivery to the last known residence or business address of such person or agent.

(d) The date of service of any compulsory process specified in paragraph (a) of this section is the date on which the process is mailed by the agency, or delivered in person, as the case may be. Whenever a period is prescribed for compliance with compulsory process, and the process is served upon the party by mail, 3 days are added to the period.

(e)(1) Any person, sole proprietorship, partnership, corporation, or other entity submitting information or producing documents or things in response to any compulsory process issued under this part may request confidential treatment for all or part of that information or for those documents or things.

(2)(i) Except as provided in paragraph (e)(2)(ii) of this section, requests for confidentiality shall be in writing, and addressed to the Chief Counsel.

(ii) Requests for confidentiality made during an information gathering hearing or an administrative deposition may be made orally to the presiding officer. Any oral request for confidentiality shall be supplemented by a written request, and this written request must be addressed to the Chief Counsel and received by NHTSA within five days of the date of the oral request.

(iii) A written request for confidentiality under paragraph (e) of this section shall specify the information, documents, or things which are to be kept confidential, specify the grounds upon which the claim is based, provide such information as may be necessary to permit the NHTSA to determine whether the claim is valid, and specify the period of time for which confidential treatment is requested.

(f) The Chief Counsel, or his or her delegate, is authorized to negotiate and approve the terms of satisfactory compliance with any compulsory process issued under this part.

§ 510.4 Subpoenas, generally.

NHTSA may issue to any person, sole proprietorship, partnership, corporation, or other entity a subpoena requiring the production of documents or things (subpoena duces tecum) and testimony of witnesses (subpoena ad testificandum), or both, relating to any matter under investigation or the subject of any inquiry. Subpoenas are issued by the Chief Counsel. When a person, sole proprietorship, partnership, corporation, or other entity is served with a subpoena ad testificandum under this part, the subpoena will describe with reasonable particularity the matters on which the testimony is required. In response to a subpoena ad testificandum, the sole proprietorship, partnership, corporation, or other entity so named shall designate one or more officers, directors, or managing agents, or other persons who consent to testify on its behalf, and set forth, for each person designated, the matters on which he or she will testify. The persons so designated shall testify as to matters known or reasonably available to the entity.

[53 FR 26261, July 12, 1988]

§ 510.5 Information gathering hearings.

(a) NHTSA may issue a subpoena to compel any person, sole proprietorship, partnership, corporation, or other entity to provide information at an information gathering hearing. The subpoenas are used for the purpose of obtaining testimony from a witness under oath and obtaining relevant documents and things. The Administrator, or a NHTSA employee designated by the Administrator, presides at the hearing. Information gathering hearings are open to the public unless the presiding officer rules otherwise, and

the hearings are stenographically reported.

(b) In addition to the presiding officer, one or more other persons may comprise the panel. Each member of the panel may question any witness at the hearing. No person who is not a member of the panel may ask questions of a witness. However, any person may submit to the panel, in writing, proposed questions to be asked of a witness. A member of the panel may pose these questions to the witness if that member deems the questions useful and appropriate. Proposed questions may be submitted to the panel at any time before or during the course of the hearing.

(c) The stenographic record of each witness's testimony will be available to the public, unless the testimony was not given publicly and the witness requests confidential treatment for some or all of his or her testimony. When an oral request for confidential treatment is made during the course of a witness's testimony, the presiding officer may order the hearing closed to the public at that point and continue the questioning of the witness, or may note the request for confidentiality and direct the witness not to answer the question at that time, but require the witness to answer the question in writing within some specified period, or take such other action as the presiding officer deems appropriate. If a request for confidential treatment is made, the release of the record is governed by the applicable laws or regulations relating to the handling of allegedly confidential information. To the extent that some or all of a witness's testimony is not publicly available, that witness may procure a copy of his or her testimony as recorded upon payment of lawfully prescribed costs.

(d)(1) Any person who is required by subpoena or designated by an entity that is required by subpoena to provide information at an information gathering hearing conducted under this section may be accompanied, represented, and advised by counsel. Any member of the bar of a Federal court or the courts of any State or Territory of the United States, the Commonwealth of Puerto Rico, or the District of Columbia, and any representative, official, or employee of the sole proprietorship, partnership, corporation or other entity under subpoena may act as counsel.

(2) A witness appearing in response to subpoena may confer in confidence with his or her counsel or representative concerning any questions asked of the witness. If such witness, counsel, or representative objects to a question, he or she shall state the objection and basis therefor on the record.

(e) The presiding officer at an information gathering hearing takes all necessary action to regulate the course of the hearing, to avoid delay, and to assure that reasonable standards of orderly and ethical conduct are maintained. In any case in which counsel for or a representative of a witness has refused to comply with the presiding officer's directions, or to adhere to reasonable standards of orderly and ethical conduct in the course of a hearing, the presiding officer states on the record the reasons given, if any, for the refusal and, if the presiding officer is someone other than the Administrator, immediately reports the refusal to the Administrator. The Administrator thereupon takes such action as the circumstances warrant.

(f) Where appropriate, the procedures established in this subsection may be utilized in informal hearings conducted by NHTSA pursuant to its authority under sections 152 and 156 of the Safety Act (15 U.S.C. 1412, 1416) to receive data, views and arguments concerning alleged safety-related defects. The rights accorded to witnesses in this subsection may also be accorded to witnesses who appear voluntarily at such hearings.

§510.6 Administrative depositions.

(a) NHTSA may issue a subpoena to compel any person, sole proprietorship, partnership, corporation, or other entity to provide information as a witness at an administrative deposition. These depositions are for the purpose of obtaining information from the witness under oath and receiving documents and things relevant to an agency investigation. These depositions shall be taken before an officer authorized to administer oaths by the laws of the United States or of the place where the deposition is taken. Unless otherwise

ordered by the Administrator, administrative depositions are closed to the public.

(b) Any person who is required by subpoena or designated by an entity that is required by subpoena to produce documents or things or to give testimony as a witness at an administrative deposition conducted under this section may be accompanied, represented, and advised by counsel. Any member of the bar or a Federal court or the courts of any State or Territory of the United States, the Commonwealth of Puerto Rico, or the District of Columbia and any representative, official, or employee of the person, sole proprietorship, partnership, corporation, or other entity under subpoena may act as counsel.

(c) During an administrative deposition:

(1) The presiding officer before whom the deposition is to be taken puts the witness on oath and personally, or by someone acting under his or her direction and in his or her presence, records the testimony of the witness. The testimony is stenographically reported.

(2) After NHTSA has examined the witness at the deposition, that witness' counsel or representative may examine the witness. NHTSA may then reexamine the witness and the witness' counsel or representative may reexamine the witness and so forth, as appropriate.

(3) A witness appearing in response to a subpoena may confer in confidence with his or her counsel or representative concerning any questions asked of the witness. If such witness, counsel, or representative objects to a question, he or she shall state the objection and the basis therefor on the record.

(4) Objections to the qualifications of the officer taking the deposition, or to the manner of taking it, or to the evidence presented, and any other objection to the proceedings shall be noted by the officer on the record, and shall be treated as continuing. Evidence objected to shall be taken subject to the objections. Errors and irregularities occurring at a deposition in the manner of the taking of the deposition, in the form of questions or answers, or in the oath or affirmation, and errors of any kind which might be obviated, removed, or cured if promptly presented shall be deemed to be waived unless reasonable objection is made thereto at the taking of the deposition.

(5) If the witness refuses to answer any question or answers evasively, or if the witness or his or her counsel engages in conduct likely to delay or obstruct the administrative deposition, such refusal, evasive answer or conduct shall be a failure to comply with the subpoena issued to the witness.

(6) Upon completion of the examination of a witness, the witness may clarify on the record any of his or her answers.

(d) The transcript of the testimony of a witness who testified in response to a subpoena at an administrative deposition is submitted to the witness for signature, unless the witness waives the right to sign the transcript. If a witness desires to make any changes in the form or substance contained in the transcript, the witness shall submit, together with the transcript, a separate document setting forth the changes and stating the reasons for such changes. If the deposition is not signed by the witness within 30 days of its submission to the witness, or such other period as the NHTSA may designate, the officer before whom the deposition was taken or a NHTSA employee signs the transcript and states on the record the fact of the waiver of the right to sign or the fact of the witness' unavailability or inability or refusal to sign together with the reasons, if any, given therefor.

(e) The transcript of the testimony of a witness will be inspected by NHTSA to determine if there are any errors in the transcription of the questions posed to the witness and the testimony in response to those questions. If NHTSA discovers any errors, it notes that fact and forwards the notation of errors together with the transcript to the witness, requesting the witness to stipulate that the transcript is in error and that the corrections made by NHTSA are accurate. If the witness will not make this stipulation, NHTSA may make a motion to the presiding officer to include its notation of error and its corrections in the record along with the version of the testimony signed by the witness.

(f)(1) Upon payment of lawfully prescribed costs, any person who is required by subpoena or designated by a sole proprietorship, partnership, corporation, or other entity that is required by subpoena to appear as a witness at an administrative deposition may procure a copy of the deposition as recorded, except that in a nonpublic investigatory proceeding, the witness may, for good cause, be limited to an inspection of the record of the deposition.

(2) A copy of the record of the deposition may be furnished to the witness without charge or at a reduced charge if the Associate Administrator for Administration determines that waiver of the fee is in the public interest because furnishing the copy can be considered as primarily benefitting the general public. Any witness who seeks a waiver of the copying charge may apply in writing to the Associate Administrator for Administration, and shall state the reasons justifying waiver of the fee in the application.

(g) The testimony obtained in an adminstrative deposition may be used or considered by the NHTSA in any of its activities, and may be used or offered into evidence in any administrative proceeding in accordance with the provisions of 5 U.S.C. 554, or in any judicial proceeding.

§510.7 General or special orders.

The NHTSA may require by the issuance of general or special orders any person, sole proprietorship, partnership, corporation, or other entity to file with the NHTSA, in such form as NHTSA may prescribe, periodic or special reports or answers in writing to specific questions. The responses to general or special orders will provide NHTSA with such information as it may require, including, but not limited to, information relating to the organization of that person, sole proprietorship, partnership, corporation, or other entity, its business, conduct, practices, management, and relation to any other person or entity. General or special orders which are required to be answered under oath are issued by the Chief Counsel. Any general or special order issued under this section contains the information specified in §510.3(b). Reports and answers filed in response to general or special orders must be made under oath, or otherwise, as NHTSA may prescribe.

§510.8 Written requests for the production of documents and things.

The NHTSA may, by the issuance of a written request for the production of documents and things, require any person, sole proprietorship, partnership, corporation, or other entity to produce documents or things. A written request for the production of documents and things may be issued alone, or as a part of a general or special order issued under §510.7. Written requests for the production of documents and things are issued by the Chief Counsel. Any written request for the production of documents and things issued under this section shall contain the information specified in §510.3(b).

§510.9 Motions to modify, limit, or quash process.

(a)(1) Any person, sole proprietorship, partnership, corporation, or other entity served with a subpoena issued under §510.4 may file with the Deputy Administrator a motion to modify, limit, or quash that subpoena. If there is no Deputy Administrator, or the Deputy Administrator is not available, such motions shall be filed with and decided by the Associate Administrator for Administration. A motion to modify, limit, or quash must be filed not later than 15 days after the service of the process or five days before the return date specified in the process, whichever is earlier, except that, if the process is served within five days of its return date, such motion may be filed at any time before the return date. Any motion must set forth the grounds and theories of why and how the party believes the process should be modified, limited, or quashed and must contain all facts and arguments which support those grounds and theories.

(2) The Deputy Administrator may, upon receiving a motion filed pursuant to paragraph (a)(1) of this section:

(i) Deny the motion;

(ii) Modify the return date of the subpoena;

(iii) Modify, limit or quash the subpoena;

(iv) Condition granting the motion upon certain requirements; or

(v) Take any other action he or she believes to be appropriate in the circumstances.

(3) The Office of the Deputy Administrator serves the decision on the motion on the moving party or the counsel or representative of the moving party. This service may be made by personal service, by registered or certified mail, or by reading a copy of the decision to the moving party or the counsel or representative of the moving party.

(4) A denial of any motion properly filed under this section shall be in writing, and shall contain a brief statement of the facts involved and the conclusions drawn from those facts by the Deputy Administrator.

(b) The Deputy Administrator's decision on the motion to modify, limit, or quash, filed under paragraph (a) of this section is not subject to reconsideration by NHTSA.

§ 510.10 Supplementation of responses to process.

(a) A person, sole proprietorship, partnership, corporation, or other entity which has provided NHTSA with information under this part, which information was complete and accurate at the time the information was given to NHTSA, is not required to supplement that information in the light of after acquired information, except:

(1) The person or entity to whom the process is addressed shall supplement the response with respect to any question directly addressed to the identity and location of persons having knowledge of information obtainable under this part.

(2) The person or entity to whom the process is addressed shall seasonably amend a prior response if that person or entity obtains information upon the basis of which the person or entity knows that the response was incorrect when made or the person or entity knows that the response, though correct when made, is no longer true and the circumstances are such that a failure to amend the response is in substance a knowing concealment.

(b) The requirement to supplement information set forth in paragraph (a) of this section terminates when:

(1) The compulsory process stated that it was issued in connection with a contemplated rulemaking action, and a final rule is issued on that subject or a notice is issued announcing that the rulemaking action has been suspended or terminated.

(2) The compulsory process stated that it was issued in connection with an enforcement investigation, and the investigation is closed.

(3) The compulsory process does not state that it is issued in connection with a specific rulemaking action or enforcement investigation, and 18 months have passed since the date of the original response.

(c) This section in no way limits NHTSA's authority to obtain supplemental information by specific demands through the means specified in § 510.3.

§ 510.11 Fees.

Any person compelled to appear in person in response to a subpoena issued under this part at an information gathering hearing or an administrative deposition is paid the same attendance and mileage fees as are paid witnesses in the courts of the United States, in accordance with title 28, U.S.C., section 1821.

§ 510.12 Remedies for failure to comply with compulsory process.

Any failure to comply with compulsory process authorized by law and issued under this part is a violation of this part. In the event of such failure to comply, NHTSA may take appropriate action pursuant to the authority conferred by the National Traffic and Motor Vehicle Safety Act or the Motor Vehicle Information and Cost Savings Act, as appropriate, including institution of judicial proceedings to enforce the order and to collect civil penalties.

PART 511—ADJUDICATIVE PROCEDURES

Subpart A—Scope of Rules; Nature of Adjudicative Proceedings, Definitions

Sec.
511.1 Scope of the rules.
511.2 Nature of adjudicative proceedings.
511.3 Definitions.

Subpart B—Pleadings; Form; Execution; Service of Documents

511.11 Commencement of proceedings.
511.12 Answer.
511.13 Amendments and supplemental pleadings.
511.14 Form and filing of documents.
511.15 Time.
511.16 Service.
511.17 Public participation.
511.18 Joinder of proceedings.

Subpart C—Prehearing Procedures; Motions; Interlocutory Appeals; Summary Judgment; Settlement

511.21 Prehearing conferences.
511.22 Prehearing briefs.
511.23 Motions.
511.24 Interlocutory appeals.
511.25 Summary decision and order.
511.26 Settlement.

Subpart D—Discovery; Compulsory Process

511.31 General provisions governing discovery.
511.32 Written interrogatories to parties.
511.33 Production of documents and things.
511.34 Requests for admission.
511.35 Testimony upon oral examination.
511.36 Motions to compel discovery.
511.37 Sanctions for failure to comply with order.
511.38 Subpoenas.
511.39 Orders requiring witnesses to testify or provide other information and granting immunity.

Subpart E—Hearings

511.41 General rules.
511.42 Powers and duties of Presiding Officer.
511.43 Evidence.
511.44 Expert witnesses.
511.45 In camera materials.
511.46 Proposed findings, conclusions, and order.
511.47 Record.
511.48 Official docket.
511.49 Fees.

Subpart F—Decision

511.51 Initial decision.
511.52 Adoption of initial decision.
511.53 Appeal from initial decision.
511.54 Review of initial decision in absence of appeal.
511.55 Final decision on appeal or review.
511.56 Reconsideration.
511.57 Effective date of order.

Subpart G—Settlement Procedure in Cases of Violation of Average Fuel Economy Standards

511.61 Purpose.
511.62 Definitions.
511.63 Criteria for settlement.
511.64 Petitions for settlement; timing, contents.
511.65 Public comment.
511.66 Confidential business information.
511.67 Settlement order.

Subpart H—Appearances; Standards of Conduct

511.71 Who may make appearances.
511.72 Authority for representation.
511.73 Written appearances.
511.74 Attorneys.
511.75 Persons not attorneys.
511.76 Qualifications and standards of conduct.
511.77 Restrictions as to former members and employees.
511.78 Prohibited communications.
APPENDIX I—FINAL PREHEARING ORDER

AUTHORITY: 15 U.S.C. 2002; delegation of authority at 49 CFR 1.50.

SOURCE: 45 FR 81578, Dec. 11, 1980, unless otherwise noted.

Subpart A—Scope of Rules; Nature of Adjudicative Proceedings, Definitions

§511.1 Scope of the rules.

This part establishes rules of practice and procedure for adjudicative proceedings conducted pursuant to section 508(a)(2) of the Motor Vehicle Information and Cost Savings Act (15 U.S.C. Pub. L. 94–163, 89 Stat. 911, section 2008(a)(2)), which are required by statute to be determined on the record after opportunity for a public hearing.

§511.2 Nature of adjudicative proceedings.

Adjudicative proceedings shall be conducted in accordance with title 5, U.S.C., sections 551 through 559 and

this part. It is the policy of the agency that adjudicative proceedings shall be conducted expeditiously and with due regard to the rights and interests of all persons affected, and to the public interest. Therefore, the presiding officer and all parties shall make every effort at each stage of a proceeding to avoid unnecessary delay.

§ 511.3 Definitions.

(a) As used in this part:

(1) The term *application* means an *ex parte* request by a party for an order that may be granted or denied without opportunity for response by any other party.

(2) The term *NHTSA* means the National Highway Traffic Safety Administration.

(3) The term *Administrator* means the Administrator of the National Highway Traffic Safety Administration.

(4) The term *Complaint Counsel* means prosecuting counsel for the NHTSA.

(5) The term *motion* means a request by a party for a ruling or order that may be granted or denied only after opportunity for response by each affected party.

(6) The term *party* means the NHTSA, and any person named as a respondent in a proceeding governed by this part.

(7) The term *person* means any individual, partnership, corporation, association, public or private organization, or Federal, State or municipal governmental entity.

(8) The term *petition* means a written request, made by a person or a party and addressed to the Presiding Officer or the Administrator, that the addressee take some action.

(9) The term *Presiding Officer* means the person who conducts an adjudicative hearing under this part, who shall be an administrative law judge qualified under title 5, U.S.C., section 3105 and assigned by the Chief Administrative Law Judge, Office of Hearings, United States Department of Transportation.

(10) The term *Respondent* means any person against whom a complaint has been issued.

(11) The term *Office of Hearings* means the Officer of Hearings, Department of Transportation.

(12) The term *staff* means the staff of the National Highway Traffic Safety Administration.

(13) The term *Chief Administrative Law Judge* means the Chief Administrative Law Judge of the Office of Hearings, Department of Transportation.

(14) The term *Docket Section* means the Docket Section, Office of the Secretary of Transportation.

[45 FR 81578, Dec. 11, 1980, as amended at 53 FR 15782, May 3, 1988]

Subpart B—Pleadings; Form; Execution; Service of Documents

§ 511.11 Commencement of proceedings.

(a) *Notice of institution of an enforcement proceeding.* An adjudicative proceeding under this part is commenced by the issuance of a complaint by the NHTSA.

(b) *Form and content of complaint.* The complaint shall be signed by the Complaint Counsel and shall contain the following:

(1) Recital of the legal authority for instituting the proceeding, with specific designation of the statutory provisions involved in each allegation.

(2) Identification of each respondent.

(3) A clear and concise statement of the charges, sufficient to inform each respondent with reasonable definiteness of the factual basis of the allegations of violation. A list and summary of documentary evidence supporting the charges shall be attached.

(4) A statement of the civil penalty which the Complaint Counsel believes is in the public interest, or which is required by law. In the case of civil penalties assessed for violations of section 507(3) of the Motor Vehicle Information and Cost Savings Act (15 U.S.C. 2007(3)), the amount of such penalty shall be calculated from the time of the alleged violation. In the case of civil penalties assessed for violations of section 507 (1) or (2) of that Act, any monetary credits available to offset those civil penalties shall be specified.

(5) The right of the respondent to a hearing on the alleged violations.

(c) *Notice to the public.* Once a complaint is issued, notice of it shall be immediately submitted to the FEDERAL REGISTER for publication. The notice in

the FEDERAL REGISTER shall briefly describe the nature of the proceeding and state that petitions to participate in the proceeding must be filed no later than the first prehearing conference.

§ 511.12 Answer.

(a) *Time for filing.* A respondent shall have twenty (20) days after service of a complaint within which to file an answer.

(b) *Content of answer.* An answer shall conform to the following:

(1) *Request for hearing.* Respondent shall state whether it requests a full, adjudicatory hearing or whether it desires to proceed on the basis of written submissions. If a hearing is requested, respondent shall specify those issues on which a hearing is desired.

(2) *Contested allegations.* An answer in which the allegations of a complaint are contested shall contain:

(i) Specific admission or denial of each allegation in the complaint. If the respondent is without knowledge or information sufficient to form a belief as to the truth of an allegation, respondent shall so state. Such a statement shall have the effect of a denial. Denials shall fairly meet the substance of the allegations denied. Allegations not thus answered shall be deemed to have been admitted.

(ii) A concise statement of the factual and/or legal defenses to each allegation of the complaint.

(3) *Admitted allegations.* If the respondent admits or fails to deny any factual allegation, he or she shall be deemed to have waived a hearing as to such allegation.

(c) *Default.* Failure of the respondent to file an answer within the time provided (or within an extended time, if provided), shall be deemed to constitute a waiver of the right to appear and contest the allegations set forth in the complaint and to authorize the Presiding Officer to make such findings of fact as are reasonable under the circumstances.

§ 511.13 Amendments and supplemental pleadings.

Whenever determination of a controversy on the merits will be facilitated thereby, the Presiding Officer upon motion, may allow appropriate amendments and supplemental pleadings which do not unduly broaden the issues in the proceeding or cause undue delay.

§ 511.14 Form and filing of documents.

(a) *Filing.* Except as otherwise provided, all documents submitted to the Administrator or a Presiding Officer shall be filed with the Docket Section, Office of the Secretary, Department of Transportation, Room 4107, 400 Seventh Street, SW., Washington, DC 20590. Documents may be filed in person or by mail and shall be deemed filed on the day of filing or mailing.

(b) *Caption.* Every document shall contain a caption setting forth the name of the action in connection with which it is filed, the docket number, and the title of the document.

(c) *Copies.* An original and nine (9) copies of all documents shall be filed. Documents may be reproduced by printing or any other process, provided that all copies filed are clear and legible.

(d) *Signature.* (1) The original of each document filed shall be signed by a representative of record for the party; or in the case of parties not represented, by the party; or by a partner, officer, or regular employee of any corporation, partnership, or association, who files an appearance on behalf of the party.

(2) The act of signing a document constitutes a representation by the signer that the signer has read it; that to the best of the signer's knowledge, information and belief, the statements made in it are true; and that it is not filed for purposes of delay.

[45 FR 81578, Dec. 11, 1980, as amended at 53 FR 15782, May 3, 1988]

§ 511.15 Time.

(a) *Computation.* In computing any period of time prescribed or allowed by the rules in this part, the day of the act, event, or default from which the designated period of time begins to run shall not be included. The last day of the period so computed shall be included, unless it is a Saturday, a Sunday, or a legal holiday, in which event the period runs until the end of the next day which is not a Saturday, a Sunday, or a legal holiday. When the

period of time prescribed or allowed is less than 7 days, intermediate Saturdays, Sundays, and legal holidays shall be excluded in the computation. As used in this part, ''legal holiday'' includes New Year's Day, Washington's Birthday, Memorial Day, Independence Day, Labor Day, Columbus Day, Veteran's Day, Thanksgiving Day, Christmas Day, and any other day appointed as a holiday by the President or the Congress of the United States.

(b) *Additional time after service by mail.* Whenever a party is required or permitted to do an act within a prescribed period after service of a document and the document is served by mail, three (3) days shall be added to the prescribed period.

(c) *Extensions.* For good cause shown, the Presiding Officer may extend any time limit prescribed or allowed under this part or by order of the Administrator or the Presiding Officer, except those governing the filing of interlocutory appeals and appeals from Initial Decisions and those expressly requiring the Administrator's action. Except as otherwise provided by law, the Administrator, for good cause shown, may extend any time limit prescribed under this part, or by order of the Administrator or the Presiding Officer. A party or participant may petition the Presiding Officer or the Administrator, as appropriate, for an extension under this paragraph. Such a petition shall be filed prior to the occurrence of the time limit which is the subject of the petition.

§ 511.16 Service.

(a) *Mandatory service.* Every document filed with the Office of Hearings shall be served upon all parties and participants to a proceeding, i.e., Complaint Counsel, respondent(s), and participants, and upon the Presiding Officer.

(b) *Service of complaint, ruling, order, decision, or subpoena.* Service of a complaint, ruling, order, decision, or subpoena may be effected as follows:

(1) *By registered or certified mail.* A copy of the document shall be addressed to the person, partnership, corporation or unincorporated association to be served at his or its residence or principal office or place of business; registered or certified; and mailed; or

(2) *By delivery to an individual.* A copy of the document may be delivered to the person to be served; or to a member of the partnership to be served; or to the president, secretary, or other executive officer, or a director of the corporation or unincorporated association to be served; or to an agent authorized by appointment or by law to receive service; or

(3) *By delivery to an address.* A copy of the document may be left at the principal office or place of business of the person, partnership, corporation, unincorporated association, or authorized agent with an officer, a managing or general agent; or it may be left with a person of suitable age and discretion residing therein, at the residence of the person or of a member of the partnership or of an executive officer, director, or agent of the corporation or unincorporated association to be served.

(c) *Service of documents with prescribed response periods.* When service of a document starts the running of a prescribed period of time for the submission of a responsive document or the occurrence of an event, the document shall be served as provided in paragraph (b) of this section.

(d) *Service of other documents.* All documents other than those specified in paragraph (c) of this section may be served as provided in paragraph (b) of this section, or by ordinary first-class mail, properly addressed, postage prepaid.

(e) *Service on a representative.* When a party has appeared by an attorney or other representative, service upon that attorney or other representative shall constitute service on the party.

(f) *Certificate of service.* The original of every document filed with the agency and required to be served upon all parties to a proceeding shall be accompanied by a certificate of service signed by the party making service, stating that such service has been made upon each party to the proceeding. Certificates of service may be in substantially the following form:

I hereby certify that I have this day served the foregoing document upon all parties of record in this proceeding by mailing, postage

prepaid (or by delivering in person) a copy to each such party.

Dated at _____ this ____ day of _____, 19____.

(Signature) _____
For _____

(g) *Date of service*. The date of service of a document shall be the date on which the document is deposited in the United States mail or is delivered in person.

[45 FR 81578, Dec. 11, 1980, as amended at 53 FR 15783, May 3, 1988]

§ 511.17 Public participation.

Participant Status. Any person interested in a proceeding commenced pursuant to § 511.11 who desires to participate in the proceeding, shall file with the Docket Section a notice of intention to participate in the proceeding and shall serve a copy of such notice on each party to the proceeding. A notice of intention to participate shall be filed not later than the commencement of the hearing. Untimely filings will not be accepted absent a determination by the Presiding Officer that the person making the request has made a substantial showing of good cause for failure to file on time. Any person who files a notice to participate in the proceeding as a nonparty shall be known as a ''participant'' and shall have the rights specified in § 511.41(d).

[53 FR 15783, May 3, 1988]

§ 511.18 Joinder of proceedings.

Two or more matters which have been scheduled for adjudicative proceedings, and which involve one or more common questions of law or fact, may be consolidated for the purpose of hearing, appeal or the Administrator's review. A motion for consolidation for the purpose of hearing may be filed with the Presiding Officer by any party to such proceedings not later than thirty (30) days prior to the hearing. A motion for consolidation for the purpose of appeal may be filed by any party to such proceedings within 10 days after issuance of the Initial Decision. A motion to consolidate shall be served upon all parties to all proceedings whose joinder is contemplated. The proceedings may be consolidated where to do so would tend to avoid unnecessary costs or delay. Such consolidation may also be ordered upon the initiative of the Presiding Officer or the Administrator, as appropriate. The Presiding Officer may order separate hearings on any issue where to do so would promote economy or convenience or would avoid prejudice to a party.

Subpart C—Prehearing Procedures; Motions; Interlocutory Appeals; Summary Judgment; Settlement

§ 511.21 Prehearing conferences.

(a) *When held*. (1) A prehearing conference shall be held in person or by conference telephone call, except in unusual circumstances, approximately fifty (50) days after publication in the FEDERAL REGISTER of the complaint, upon ten (10) days notice to all parties and participants, to consider any or all the following:

(i) Motions for consolidation of proceedings;

(ii) Identification, simplification and clarification of the issues;

(iii) Necessity or desirability of amending the pleadings;

(iv) Stipulations and admissions of fact and of the content and authenticity of documents;

(v) Oppositions to notices of oral examination;

(vi) Motions for protective orders to limit or modify discovery;

(vii) Issuance of subpoenas to compel the appearance of witnesses and the production of documents;

(viii) Limitation of the number of witnesses, particularly the avoidance of duplicate expert witnesses;

(ix) Matters of which official notice will be taken and matters which may be resolved by reliance upon findings of other Federal agencies; and

(x) Other matters which may expedite the conduct of the hearing.

§ 511.22 Prehearing briefs.

Not later ten (10) days prior to the hearing, the parties shall, except when ordered otherwise by the Presiding Officer in unusual circumstances, simultaneously serve and file prehearing briefs, which shall set forth (a) a statement of the facts expected to be proved, and of the anticipated order of

proof; (b) a statement of the issues and the legal argument in support of the party's contentions with respect to each issue; and (c) a table of authorities with a designation by asterisk of the principal authorities relied upon.

§ 511.23 Motions.

(a) *Presentations and dispositions.* During the time a proceeding is before a Presiding Officer, all motions, whether oral or written, except those filed under § 511.42(e), shall be addressed to the Presiding Officer, who shall rule upon them promptly after affording an opportunity for response.

(b) *Written motions.* All written motions shall state the particular order, ruling, or action desired and the grounds therefor. If a motion is supported by memoranda, affidavits or other documents, they shall be served and filed with the motion. All motions shall contain a proposed order setting forth the relief sought. All written motions shall be filed with the Executive Secretary and served on all parties, and all motions addressed to the Administrator shall be in writing.

(c) *Responses.* Within ten (10) days after service of any written motion or petition or within such longer or shorter time as may be designated by these Rules or by the Presiding Officer or the Administrator, the opposing party or parties shall file a written response to such motion. Where a motion would affect only a single party, or an identifiable group of parties, the Presiding Officer or Administrator may limit the response to the motion to the affected party or parties. Failure to respond to a written motion may, in the discretion of the Presiding Officer be deemed as consent to the granting of the relief sought in the motion. The moving party shall have no right to reply, except as permitted by the Presiding Officer or the Administrator.

(d) *Rulings on motions for dismissal.* When a motion to dismiss a complaint or motion for other relief is granted with the result that the proceeding before the Presiding Officer is terminated, the Presiding Officer shall issue an Initial Decision and Order thereon in accordance with the provisions of § 511.51. If such a motion is granted as to all issues alleged in the complaint in regard to some, but not all, of the respondents, or is granted as to any part of the allegations in regard to any or all of the respondents, the Presiding Officer shall enter an order on the record and consider the remaining issues in the Initial Decision. The Presiding Officer may elect to defer ruling on a motion to dismiss until the close of the case.

§ 511.24 Interlocutory appeals.

(a) *General.* Rulings of the Presiding Officer may not be appealed to the Administrator prior to the Initial Decision, except as provided herein.

(b) *Exceptions*—(1) *Interlocutory appeals to Administrator.* The Administrator may, in his or her discretion, entertain interlocutory appeals where a ruling of the Presiding Officer:

(i) Requires the production or disclosure of records claimed to be confidential;

(ii) Requires the testimony of a supervisory official of the agency other than one especially cognizant of the facts of the matter in adjudication;

(iii) Excludes an attorney from participation in a proceeding pursuant to § 511.42(b).

(2) *Procedures for interlocutory appeals.* Within ten (10) days of issuance of a ruling, any party may petition the Administrator to entertain an interlocutory appeal on a ruling in the categories enumerated above. The petition shall not exceed fifteen (15) pages. Any other party may file a response to the petition within ten (10) days of its service. The response shall not exceed fifteen (15) pages. The Administrator shall thereupon act upon the petition, or the Administrator shall request such further briefing or oral presentation as he may deem necessary.

(3) *Interlocutory appeals from all other rulings*—(i) *Grounds.* Interlocutory appeals from all other rulings by the Presiding Officer may proceed only upon motion to the Presiding Officer and a determination by the Presiding Officer in writing, with justification in support thereof, that the ruling involves a controlling question of law or policy as to which there is substantial ground for differences of opinion and that an immediate appeal from the ruling may

materially advance the ultimate termination of the litigation, or that subsequent review will be an inadequate remedy.

(ii) *Form.* If the Presiding Officer determines, in accordance with paragraph (b)(3)(i) of this section that an interlocutory appeal may proceed, a petition for interlocutory appeal may be filed with and acted upon by the Administrator in accordance with paragraph (b)(2) of this section.

(c) *Proceedings not stayed.* A petition for interlocutory appeal under this part shall not stay the proceedings before the Presiding Officer unless the Presiding Officer shall so order, except that a ruling of the Presiding Officer requiring the production of records claimed to be confidential shall be automatically stayed for a period of (10) days following the issuance of such ruling to allow an affected party the opportunity to file a petition for an interlocutory appeal pursuant to § 511.24(b)(2). The filing of such a petition shall automatically extend the stay of such a ruling pending the Administrator's action on such petition.

§ 511.25 Summary decision and order.

(a) *Motion.* Any party may move, with a supporting memorandum, for a Summary Decision and Order in its favor upon all or any of the issues in controversy. Complaint Counsel may so move at any time after thirty (30) days following issuance of a complaint, and any other party may so move at any time after issuance of a complaint. Any such motion by any party shall be filed at least twenty (20) days before the date fixed for the adjudicatory hearing.

(b) *Response to motion.* Any other party may, within ten (10) days after service of the motion, file a response thereto with a supporting memorandum.

(c) *Grounds.* A Summary Decision and Order shall be granted if the pleadings and any testimony upon oral examination, answers to interrogatories, admissions, and/or affidavits show that there is no genuine issue as to any material fact and that the moving party is entitled to a Summary Decision and Order as a matter of law.

(d) *Legal effect.* A Summary Decision and Order upon all the issues being adjudicated shall constitute the Initial Decision of the Presiding Officer, and may be appealed to the Administrator in accordance with § 511.53. A Summary Decision, interlocutory in character, may be rendered on fewer than all issues and may not be appealed prior to issuance of the Initial Decision, except in accordance with § 511.24.

(e) *Case not fully adjudicated on motion.* A Summary Decision and Order that does not dispose of the whole case shall include a statement of those material facts as to which there is no substantial controversy, and of those material facts that are actually and in good faith controverted. The Summary Order shall direct such further proceedings as are just.

§ 511.26 Settlement.

(a) *Applicability.* This section applies only to cases of alleged violations of section 507(3) of the Motor Vehicle Information and Cost Savings Act, Pub. L. 94–163, 89 Stat. 911 (15 U.S.C. section 2007(3)). Settlement in other cases may be made only in accordance with subpart G of this part.

(b) *Availability.* Any party shall have the opportunity to submit an offer of settlement to the Presiding Officer.

(c) *Form.* Offers of settlement shall be in the form of a consent agreement and order, shall be signed by the party submitting the offer or his representative, and may be signed by any other party. Each offer of settlement shall be accompanied by a motion to transmit to the Administrator the proposed agreement and order, outlining the substantive provisions of the agreement, and the reasons why it should be accepted.

(d) *Contents.* The proposed consent agreement and order which constitute the offer of settlement shall contain the following:

(1) An admission of all jurisdictional facts;

(2) An express waiver of further procedural steps, and of all rights to seek judicial review or otherwise to contest the validity of the order;

(3) A description of the alleged noncompliance, or violation;

(4) Provisions to the effect that the allegations of the complaint are resolved by the proposed consent agreement and order;

(5) A listing of the acts or practices from which the respondent shall refrain;

(6) A detailed statement of the corrective action(s) which the respondent shall excute and the civil penalty, if any, that respondent shall pay.

(e) *Transmittal.* The Presiding Officer shall transmit to the Administrator for decision all offers of settlement and accompanying memoranda that meet the requirements enumerated in paragraph (d) of this section. The Presiding Officer may, but need not, recommend acceptance or rejection of such offers. Any party or participant may object to a proposed consent agreement by filing a motion and supporting memorandum with the Administrator.

(f) *Stay of proceedings.* When an offer of settlement has been agreed to by the parties and has been transmitted to the Administrator, the proceedings shall be stayed until the Administrator has ruled on the offer. When an offer of settlement has been made and transmitted to the Administrator but has not been agreed to by all parties, the proceedings shall not be stayed pending the Administrator's decision on the offer.

(g) *Administrator's ruling.* The Administrator will rule upon all transmitted offers of settlement. If the Administrator accepts the offer, the Administrator shall issue an appropriate order. The order shall become effective upon issuance. In determining whether to accept an offer of settlement, the Administrator will consider the gravity of the alleged violation, and any good faith efforts by the respondent to comply with applicable requirements.

(h) *Rejection.* If the Administrator rejects an offer of settlement, the Administrator shall give written notice of that decision and the reasons therefor to the parties and the Presiding Officer. Promptly thereafter, the Presiding Officer shall issue an order notifying the parties of the resumption of the proceedings, including any modifications to the schedule resulting from the stay of the proceedings.

(i) *Effect of rejected offer.* Rejected offers of settlement shall not be admissible in evidence over the objection of any signatory, nor shall the fact of the proposal of the offer be admissible in evidence.

[45 FR 81578, Dec. 11, 1980, as amended at 53 FR 15783, May 3, 1988]

Subpart D—Discovery; Compulsory Process

§ 511.31 General provisions governing discovery.

(a) *Applicability.* The discovery rules established in this subpart are applicable to the discovery of information among the parties to a proceeding. Parties seeking information from persons not parties may do so by subpoena in accordance with § 511.38.

(b) *Discovery methods.* Parties may obtain discovery by one or more of the following methods: (1) Written interrogatories; (2) requests for production of documents or things; (3) requests for admissions; or (4) testimony upon oral examination. Unless the Presiding Officer otherwise orders under paragraph (d) of this section, the frequency of use of these methods is not limited.

(c) *Scope of discovery.* The scope of discovery is as follows:

(1) *In general.* Parties may obtain discovery regarding any matter not privileged, which is relevant to the subject matter involved in the proceedings, whether it relates to the claim or defense of the party seeking discovery or to the claim or defense of any other party. It is not ground for objection that the information sought will be inadmissible at the hearing if the information sought appears reasonably calculated to lead to the discovery of admissible evidence.

(2) *Exception.* Parties may not obtain discovery of documents which accompanied the staff's recommendation as to whether a complaint should issue or of documents or portions thereof which would be exempt from discovery under Rule 26(b)(3) of the Federal Rules of Civil Procedure.

(3) *Hearing preparation: Experts.* A party may obtain discovery of facts known and opinions held by experts, regardless of whether they are acquired or developed in anticipation of or for

litigation. Such discovery may be had by any of the methods provided in paragraph (b) of this section.

(d) *Protective orders.* Upon motion by a party or person and for good cause shown, the Presiding Officer may make any order which justice requires to protect such party or person from annoyance, embarrassment, competitive disadvantage, oppression or undue burden or expense, including one or more of the following: (1) That the discovery shall not be had; (2) that the discovery may be had only on specified terms and conditions, including a designation of the time and/or place; (3) that the discovery shall be had only by a method of discovery other than that selected by the party seeking discovery; (4) that certain matters shall not be inquired into, or that the scope of discovery shall be limited to certain matters; (5) that discovery shall be conducted with no one present except persons designated by the Presiding Officer; (6) that a trade secret or other confidential research, development, or commercial information shall not be disclosed or shall be disclosed only in a designated way or only to designated parties; and (7) that responses to discovery shall be placed *in camera* in accordance with § 511.45.

If a motion for a protective order is denied in whole or in part, the Presiding Officer may, on such terms or conditions as are just, order that any party provide or permit discovery.

(e) *Sequence and timing of discovery.* Discovery may commence at any time after filing of the answer. Unless otherwise provided in these Rules or by order of the Presiding Officer, methods of discovery may be used in any sequence and the fact that a party is conducting discovery shall not operate to delay any other party's discovery.

(f) *Supplementation of responses.* A party who has responded to a request for discovery shall supplement the response with information thereafter acquired.

(g) *Completion of discovery.* All discovery shall be completed as soon as practical but in no case longer than one hundred fifty (150) days after issuance of a complaint unless otherwise ordered by the Presiding Officer in exceptional circumstances and for good cause shown. All discovery shall be served by a date which affords the party from whom discovery is sought the full response period provided by these Rules.

(h) *Service and filing of discovery.* All discovery requests and written responses, and all notices of the taking of testimony, shall be filed with the Docket Section and served on all parties and the Presiding Officer.

(i) *Control of discovery.* The use of these discovery procedures is subject to the control of the Presiding Officer, who may issue any just and appropriate order for the purpose of ensuring their timely completion.

[45 FR 81578, Dec. 11, 1980, as amended at 53 FR 15783, May 3, 1988]

§ 511.32 Written interrogatories to parties.

(a) *Availability; procedures for use.* Any party may serve upon any other party written interrogatories to be answered by the party served or, if the party served is a public or private corporation or a partnership or association or governmental agency, by any officer or agent, who shall furnish such information as is available to the party. Interrogatories may, without leave of the Presiding Officer, be served upon any party after filing of the answer.

(b) *Procedures for response.* Each interrogatory shall be answered separately and fully in writing under oath, unless it is objected to, in which event the reasons for objection shall be stated in lieu of an answer. The answers are to be signed by a responsible representative of the respondent and the objections signed by the representative making them. The party upon whom the interrogatories have been served shall serve a copy of the answers, and objections if any, within 30 days after service of the interrogatories. The Presiding Officer may allow a shorter or longer time for response. The party submitting the interrogatories may move for an order under § 511.36 with respect to any objection to or other failure to answer an interrogatory.

(c) *Scope of interrogatories.* Interrogatories may relate to any matters which can be inquired into under § 511.31(c)(1), and the answers may be

used to the extent permitted under this part. An interrogatory otherwise proper is not objectionable merely because an answer to the interrogatory would involve an opinion or contention that relates to fact or to the application of law to fact, but the Presiding Officer may order that such an interrogatory need not be answered until a later time.

(d) *Option to produce business records.* Where the answer to an interrogatory may be derived or ascertained from the business records of the party upon whom the interrogatory has been served, or from an examination, audit or inspection of such business records, or from a compilation, abstract or summary based thereon, and the burden of deriving the answer is substantially the same for the party serving the interrogatory as for the party served, it is a sufficient answer to the interrogatory to specify the records from which the answer may be derived or ascertained and to afford to the party serving the interrogatory reasonable opportunity to examine, audit or inspect such records and to make copies, complications, abstracts, or summaries.

§ 511.33 Production of documents and things.

(a) *Scope.* Any party may serve upon any other party a request (1) to produce and permit the party making the request, or someone acting on behalf of that party, to inspect and copy any designated documents (including writings, drawings, graphs, charts, photographs, phono-records, and any other data-compilation from which information can be obtained, translated, if necessary, by the party in possession into reasonably usable form), or (2) to inspect and copy, test or sample tangible things which constitute or contain matters within the scope of § 511.31(c)(1) and which are in the possession, custody or control of the party upon whom the request is served.

(b) *Procedure for request.* The request may be served at any time after the filing of the answer without leave of the Presiding Officer. The request shall set forth the items to be inspected either by individual item or by category, and shall describe each item or category with reasonable particularity. The request shall specify a reasonable time, place and manner for making the inspection and performing the related acts.

(c) *Procedure for response.* The party upon whom the request is served shall serve a written response within twenty (20) days after service of the request. The Presiding Officer may allow a shorter or longer time for response. The response shall state, with respect to each item or category requested, that inspection and related activities will be permitted as requested, unless the request is objected to, in which event the reasons for objection shall be stated. If objection is made to only part of an item or category, that part shall be so specified. The party submitting the request may move for an order under § 511.36 with respect to any objection to or other failure to respond to the request or any part thereof, or to any failure to permit inspection as requested.

§ 511.34 Requests for admission.

(a) *Procedure for request.* A party may serve upon any other party a written request for the admission, for the purposes of the pending proceeding only, of the truth of any matters within the scope of § 511.31(c)(1) set forth in the request that relate to statements or opinions of fact or of the application of law to fact, including the genuineness of documents described in the request. Copies of documents shall be served with the request unless they have been, or are otherwise furnished or made available for inspection and copying. The request may, without leave of the Presiding Officer, be served upon any party after filing of the answer. Each matter as to which an admission is requested shall be separately set forth.

(b) *Procedure for response.* The matter as to which an admission is requested is deemed admitted unless within thirty (30) days after service of the request, or within such shorter or longer time as the Presiding Officer may allow, the party to whom the request is directed serves upon the party requesting the admission a written answer or objection addressed to the matter, signed by

the party or the party's representatives. If objection is made, the reasons therefore shall be stated.

The answer shall specifically admit or deny the matter or set forth in detail the reasons why the answering party cannot truthfully admit or deny the matter. A denial shall fairly meet the substance of the requested admission. When good faith requires that a party qualify an answer or deny only a part of the matter as to which an admission is requested, the party shall specify the portion that is true and qualify or deny the remainder. An answering party may not give lack of information or knowledge as a reason for failure to admit or deny, unless the party states that he or she has made reasonable inquiry and that the information known or readily available to him or her is insufficient to enable him or her to admit or deny. A party who considers that a matter as to which an admission has been requested presents a genuine issue for hearing may not, on that ground alone, object to the request but may deny the matter or set forth reasons why the party cannot admit or deny it. The party who has requested an admission may move to determine the sufficiency of the answer or objection thereto in accordance with § 511.36. If the Presiding Officer determines that an answer does not comply with the requirements of this section, he or she may order that the matter be deemed admitted or that an amended answer be served.

(c) *Effect of admission.* Any matter admitted under this section is conclusively established unless the Presiding Officer on motion permits withdrawal or amendment of such admission. The Presiding Officer may permit withdrawal or amendment when the presentation of the merits of the action will be served thereby and the party that obtained the admission fails to satisfy the Presiding Officer that withdrawal or amendment will prejudice that party in maintaining an action or defense on the merits.

§ 511.35 Testimony upon oral examination.

(a) *When testimony may be taken.* At any time after the answer is filed under § 511.12, upon leave of the Presiding Officer and under such terms and conditions as the Presiding Officer may prescribe, any party may take the testimony of any other party, including the agents, employees, consultants or prospective witnesses of that party at a place convenient to the witness. The attendance of witnesses and the production of documents and things at the examination may be compelled by subpoena as provided in § 511.38.

(b) *Notice of oral examination*—(1) *Examination of a party.* A party desiring to examine another party to the proceeding shall, after obtaining leave from the Presiding Officer, serve written notice of the examination on all other parties and the Presiding Officer at least ten (10) days before the date of the examination. The notice shall state (i) the time and place for making the examination; (ii) the name and address of each person to be examined, if known, or if the name is not known, a general description sufficient to identify him; and (iii) the subject matter of the expected testimony. If a subpoena *duces tecum* is to be served on the person to be examined, the designation of the materials to be produced, as set forth in the subpoena, shall be attached to or included in the notice of examination.

(2) *Examination of a nonparty.* A party desiring to examine a person who is not a party to the proceeding shall make application for a subpoena, in accordance with § 511.38, to compel the attendance, testimony and/or production of documents by such person who is not a party. The party desiring such examination shall serve written notice of the examination on all other parties to the proceeding, after issuance of the subpoena by the Presiding Officer or a designated alternate.

(3) *Opposition to notice.* A person served with a notice of examination may, within 3 days of the date of service, oppose, in writing, the examination. The Presiding Officer shall rule on the notice and any opposition and may order the taking of all noticed examinations, upon a showing of good cause therefor. The Presiding Officer may, for good cause shown, enlarge or shorten the time for the taking of an examination.

(c) *Persons before whom examinations may be taken.* Examinations may be taken before any person authorized to administer oaths by the laws of the United States or of the place where the examination is held. No examination shall be taken before a person who is a relative or employee or attorney or representative of any party, or who is a relative or employee of such attorney or representative, or who is financially interested in the action.

(d) *Procedure*—(1) *Examination.* Each witness shall be duly sworn, and all testimony shall be duly recorded. All parties or their representatives may be present and participate in the examination. Examination and cross-examination of witnesses may proceed as permitted at the hearing. Questions objected to shall be answered subject to the objections. Objections shall be in short form, and shall state the grounds relied upon. The questions propounded and the answers thereto, together with all objections made, shall be recorded by the official reporter before whom the examination is made. The original or a verified copy of all documents and things produced for inspection during the examination of the witness shall, upon a request of any party present, be marked for identification and annexed to the record of the examination.

(2) *Motion to terminate or limit examination.* At any time during the examination, upon motion of any party or of the witness, and upon showing that the examination is being conducted in bad faith or in such manner as unreasonably to annoy, embarrass or oppress the witness or party, the Presiding Officer may, upon motion, order the party conducting the examination to terminate the examination, or may limit the scope and manner of the examination as provided in § 511.31(d).

(3) *Participation by parties not present.* In lieu of attending an examination, any party may serve written questions in a sealed envelope on the party conducting the examination. That party shall transmit the envelope to the official reporter, who shall unseal it and propound the questions contained therein to the witness.

(e) *Transcription and filing of testimony*—(1) *Transcription.* Upon request by any party, the testimony recorded at an examination shall be transcribed. When the testimony is fully transcribed, the transcript shall be submitted to the witness for examination and signing, and shall be read to or by the witness, unless such examination and signature are waived by the witness. Any change in form or substance which the witness desires to make shall be entered upon the transcript of the official reporter with a statement of the reasons given by the witness for making them. The transcript shall then be signed by the witness, unless the parties by stipulation waive the signing, or the witness is ill or cannot be found or refuses to sign. If the transcript is not signed by the witness within thirty (30) days of its submission to him, the official reporter shall sign it and state on the record the fact of the waiver of signature or of the illness or absence of the witness or the fact of the refusal to sign, together with a statement of the reasons therefor. The testimony may then be used as fully as though signed, in accordance with paragraph (i) of this section.

(2) *Certification and filing.* The official reporter shall certify on the transcript that the witness was duly sworn and that the transcript is a true record of the testimony given and corrections made by the witness. The official reporter shall then seal the transcript in an envelope endorsed with the title and docket number of the action and marked ''Testimony of [name of witness]'' and shall promptly file the transcript with the Docket Section. The Presiding Officer shall notify all parties of the filing of the transcript and the Docket Section shall furnish a copy of the transcript to any party or to the witness upon payment of reasonable charges therefor.

(f) *Costs of examination.* The party who notices the examination shall pay for the examination. The party who requests transcription of the examination shall pay for the transcription.

(g) *Failure to attend or to serve subpoena; expenses.* If a party who notices an examination fails to attend and proceed therewith and another party attends in person or by a representative pursuant to the notice, the Presiding Officer may order the party who gave the notice to pay the attending party

the reasonable expenses incurred. If a party who notices an examination fails to serve a subpoena upon the witness and as a result the witness does not attend, and if another party attends in person or by a representative because that party expects the examination to be made, the Presiding Officer may order the party who gave notice to pay the attending party the reasonable expenses incurred.

(h) *Examination to preserve testimony*—(1) *When available.* By leave of the Presiding Officer, a party may examine a witness for the purpose of perpetuating the testimony of that witness. A party who wishes to conduct such an examination shall obtain prior leave of the Presiding Officer by filing a motion. The motion shall include a showing of substantial reason to believe that the testimony could not be presented at the hearing. If the Presiding Officer is satisfied that the perpetuation of the testimony may prevent a failure of justice or is otherwise reasonably necessary, he or she shall order that the deposition be taken.

(2) *Procedure.* Notice of an examination to preserve testimony shall be served at least fifteen (15) days prior to the examination. The examination shall be taken in accordance with the provisions of paragraph (d) of this section. Any examination taken to preserve testimony shall be fully transcribed and filed in accordance with paragraph (e) of this section.

(i) *Use of testimony obtained under this section.* At the hearing or upon a motion or an interlocutory proceeding, any part or all of a deposition, so far as admissible under the rules of evidence applied as though the witness were then present and testifying, may be used against any party who was present or represented at the taking of the deposition or who had reasonable notice thereof, in accordance with any of the following provisions:

(1) Any deposition may be used by any party for the purpose of contradicting or impeaching the testimony of the deponent as a witness.

(2) The deposition of a party or of a person who at the time of the taking of his testimony was an officer, director or managing agent of a party may be used against that party for any purpose.

(3) The deposition of a witness, whether or not a party, may be used by any party for any purpose if the Presiding Officer finds:

(i) That the witness is dead; or

(ii) That the witness is at a greater distance than 100 miles from the place of the hearing, or is out of the United States, unless it appears that the absence of the witness was procured by the party offering the deposition; or

(iii) That the witness is unable to attend or testify because of age, illness, infirmity, or imprisonment; or

(iv) That the party offering the deposition has been unable to procure the attendance of the witness by subpoena; or

(v) Upon application and notice, that such exceptional circumstances exist as to make it desirable, in the interest of justice and with due regard to the importance of presenting the testimony of witnesses orally in open court, to allow the deposition to be used.

(4) If only part of a deposition is offered in evidence by a party, an adverse party may require him to introduce any other part which ought in fairness to be considered with the part introduced, and any party may introduce any other parts.

[45 FR 81578, Dec. 11, 1980, as amended at 53 FR 15783, May 3, 1988]

§ 511.36 Motions to compel discovery.

If a party fails to respond to discovery, in whole or in part, the party seeking discovery may move within twenty (20) days for an order compelling an answer, or compelling inspection or production of documents, or otherwise compelling discovery. For purposes of this subsection, an evasive or incomplete response is to be treated as a failure to respond. If the motion is granted, the Presiding Officer shall issue an order compelling discovery. If the motion is denied in whole or in part, the Presiding Officer may make such protective order as he or she would have been empowered to make on a motion pursuant to § 511.31(d). When making oral examinations, the discovering party shall continue the examination to the extent possible

with respect to other areas of inquiry before moving to compel discovery.

§ 511.37 Sanctions for failure to comply with order.

If a party fails to obey an order to provide or permit discovery, the Presiding Officer may take such action as is just, including but not limited to the following:

(a) Infer that the admission, testimony, document or other evidence would have been adverse to the party;

(b) Order that for the purposes of the proceeding, the matters regarding which the order was made or any other designated facts shall be taken to be established in accordance with the claim of the party obtaining the order;

(c) Order that the party withholding discovery not introduce into evidence or otherwise rely, in support of any claim or defense, upon the documents or other evidence withheld;

(d) Order that the party withholding discovery not introduce into evidence or otherwise use at the hearing, information obtained in discovery;

(e) Order that the party withholding discovery not be heard to object to introduction and use of secondary evidence to show what the withheld admission, testimony, documents, or other evidence would have shown;

(f) Order that a pleading, or part of a pleading, or a motion or other submission by the party, concerning which the order was issued, be stricken, or that decision on the pleadings be rendered against the party, or both; and

(g) Exclude the party or representative from proceedings, in accordance with § 511.42(b).

Any such action may be taken by order at any point in the proceedings.

§ 511.38 Subpoenas.

(a) *Availability*. A subpoena shall be addressed to any party or any person not a party for the purpose of compelling attendance, testimony and production of documents at a hearing or oral examination.

(b) *Form*. A subpoena shall identify the action with which it is connected; shall specify the person to whom it is addressed and the date, time and place for compliance with its provisions; and shall be issued by order of the Presiding Officer and signed by the Chief Counsel, or by the Presiding Officer. A subpoena duces tecum shall specify the books, papers, documents, or other materials or data-compilations to be produced.

(c) *How obtained*—(1) *Content of application*. An application for the issuance of a subpoena stating reasons shall be submitted in triplicate to the Presiding Officer.

(2) *Procedure of application*. The original and two copies of the subpoena, marked ''original,'' ''duplicate'' and ''triplicate,'' shall accompany the application. The Presiding Officer shall rule upon an application for a subpoena *ex parte*, by issuing the subpoena or by issuing an order denying the application.

(d) *Issuance of a subpoena*. The Presiding Officer shall issue a subpoena by signing and dating, or ordering the Chief Counsel to sign and date, each copy in the lower right-hand corner of the document. The ''duplicate'' and ''triplicate'' copies of the subpoena shall be transmitted to the applicant for service in accordance with these Rules; the ''original'' copy shall be retained by or forwarded to the Chief Counsel for retention in the docket of the proceeding.

(e) *Service of a subpoena*. A subpoena may be served in person or by certified mail, return receipt requested, as provided in § 511.16(b). Service shall be made by delivery of the signed ''duplicate'' copy to the person named therein.

(f) *Return of service*. A person serving a subpoena shall promptly execute a return of service, stating the date, time, and manner of service. If service is effected by mail, the signed return receipt shall accompany the return of service. In case of failure to make service, a statement of the reasons for the failure shall be made. The ''triplicate'' of the subpoena, bearing or accompanied by the return of service, shall be returned forthwith to the Chief Counsel after service has been completed.

(g) *Motion to quash or limit subpoena*. Within five (5) days of receipt of a subpoena, the person against whom it is directed may file with the Presiding Officer a motion to quash, modify, or limit the subpoena, setting forth the

reasons why the subpoena should be withdrawn or why it should be modified or limited in scope. Any such motion shall be answered within five (5) days of service, and shall be ruled on immediately thereafter. The order shall specify the date, if any, for compliance with the specifications of the subpoena and the reasons for the decision.

(h) *Consequences of failure to comply.* In the event of failure to comply with a subpoena, the Presiding Officer may take any of the actions enumerated in § 511.37 or may order any other appropriate relief to compensate for the withheld testimony, documents, or other materials. If in the opinon of the Presiding Officer such relief is insufficient, the Presiding Officer shall certify to the Administrator a request for judicial enforcement of the subpoena.

[45 FR 81578, Dec. 11, 1980, as amended at 53 FR 26261, July 12, 1988]

§ 511.39 Orders requiring witnesses to testify or provide other information and granting immunity.

(a) A party who desires the issuance of an order requiring a witness to testify or provide other information upon being granted immunity from prosecution under title 18, U.S.C., section 6002, may make a motion to that effect. The motion shall be made and ruled on in accordance with § 511.22, and shall include a showing:

(1) That the testimony or other information sought from a witness or prospective witness may be necessary to the public interest; and

(2) That such individual has refused or is likely to refuse to testify or provide such information on the basis of that individual's privilege against self-incrimination.

(b) If the Presiding Officer determines that the witness' testimony appears necessary and that the privilege against self-incrimination may be invoked, he or she may certify to the Administrator a request that he or she obtain the approval of the Attorney General of the United States for the issuance of an order granting immunity.

(c) Upon application to and approval of the Attorney General of the United States, and after the witness has invoked the privilege against self-incrimination, the Presiding Officer shall issue the order granting immunity unless he or she determines that the privilege was improperly invoked.

(d) Failure of a witness to testify after a grant of immunity or after a denial of the issuance of an order granting immunity shall result in the imposition of appropriate sanctions as provided in § 511.37.

Subpart E—Hearings

§ 511.41 General rules.

(a) *Public hearings.* All hearings pursuant to this part shall be public unless otherwise ordered by the Presiding Officer. Notice of the time and location of the hearing shall be served on each party and participant, and published in the FEDERAL REGISTER.

(b) *Expedition.* Hearings shall proceed with all reasonable speed, insofar as practicable and with due regard to the convenience of the parties and shall continue without suspension until concluded, except in unusual circumstances.

(c) *Rights of parties.* Every party shall have the right of timely notice and all other rights essential to a fair hearing, including, but not limited to, the rights to present evidence, to conduct such cross-examination as may be necessary in the judgment of the Presiding Officer for a full and complete disclosure of the facts, and to be heard by objection, motion, brief, and argument.

(d) *Rights of participants.* Every participant shall have the right to make a written or oral statement of position, file proposed findings of fact, conclusions of law and a posthearing brief, in accordance with § 511.17(b).

(e) *Rights of witnesses.* Any person compelled to testify in a proceeding in response to a subpoena may be accompanied, represented, and advised by counsel or other representative, and may obtain a transcript of his or her testimony at no cost.

§ 511.42 Powers and duties of Presiding Officer.

(a) *General.* A Presiding Officer shall have the duty to conduct full, fair, and impartial hearings, to take appropriate action to avoid unnecessary delay in

the disposition of proceedings, and to maintain order. He or she shall have all powers necessary to that end, including the following powers:

(1) To administer oaths and affirmations;

(2) To compel discovery and to impose appropriate sanctions for failure to make discovery;

(3) To issue subpoenas;

(4) To rule upon offers of proof and receive relevant and probative evidence;

(5) To regulate the course of the hearings and the conduct of the parties and their representatives therein;

(6) To hold conferences for simplification of the issues, settlement of the proceedings, or any other proper purposes;

(7) To consider and rule, orally or in writing, upon all procedural and other motions appropriate in an adjudicative proceeding;

(8) To issue initial decisions, rulings, and orders, as appropriate;

(9) To certify questions to the Administrator for determination; and

(10) To take any action authorized in this part or in conformance with the provisions of title 5, U.S.C., sections 551 through 559.

(b) *Exclusion of parties by Presiding Officer*. A Presiding Officer shall have the authority, for good cause stated on the record, to exclude from participation in a proceeding any party, participant, and/or representative who shall violate requirements of § 511.76. Any party, participant and/or representative so excluded may appeal to the Administrator in accordance with the provisions of § 511.23. If the representative of a party or participant is excluded, the hearing shall be suspended for a reasonable time so that the party or participant may obtain another representative.

(c) *Substitution of Presiding Officer*. In the event of the substitution of a new Presiding Officer for the one originally designated, any motion predicated upon such substitution shall be made within five (5) days of the substitution.

(d) *Interference*. In the performance of adjudicative functions, a Presiding Officer shall not be responsible to or subject to the supervision or direction of the Administrator or of any officer, employee, or agent engaged in the performance of investigative or prosecuting functions for NHTSA. All directions by the Administrator to a Presiding Officer concerning any adjudicative proceeding shall appear on and be made a part of the record.

(e) *Disqualification of Presiding Officer*. (1) When a Presiding Officer deems himself or herself disqualified to preside in a particular proceeding, he or she shall withdraw by notice on the record and shall notify the Chief Administrative Law Judge of the withdrawal.

(2) Whenever, for any reason, any party shall deem the Presiding Officer to be disqualified to preside, or to continue to preside, in a particular proceeding, that party may file with the Chief Administrative Law Judge a motion to disqualify and remove, supported by affidavit(s) setting forth the alleged grounds for disqualification. A copy of the motion and supporting affidavit(s) shall be served by the Chief Administrative Law Judge on the Presiding Officer whose removal is sought. The Presiding Officer shall have ten (10) days from service to reply in writing. Such motion shall not stay the proceeding unless otherwise ordered by the Presiding Officer or the Administrator. If the Presiding Officer does not disqualify himself or herself, the Administrator will determine the validity of the grounds alleged, either directly or on the report of another Presiding Officer appointed to conduct a hearing for that purpose, and shall in the event of disqualification take appropriate action, by assigning another Presiding Officer or requesting assignment of another Administrative Law Judge through the Office of Hearings.

[45 FR 81578, Dec. 11, 1980, as amended at 53 FR 15783, May 3, 1988]

§ 511.43 Evidence.

(a) *Applicability of Federal Rules of Evidence*. The Federal Rules of Evidence shall apply to proceedings held under this part only as a general guide. The Presiding Officer may admit any relevent and probative evidence.

(b) *Burden of proof*. (1) Complaint counsel shall have the burden of sustaining the allegations of any complaint.

(2) Any party who is the proponent of a legal and/or factual proposition shall have the burden of sustaining the proposition.

(c) *Presumptions.* A presumption imposes on the party against whom it is directed the burden of going forward with evidence to rebut or meet the presumption, but does not shift to such party the burden of proof in the sense of the risk of nonpersuasion, which remains throughout the hearing upon the party on whom it was originally cast.

(d) *Admissibility.* All relevant and reliable evidence is admissible, but may be excluded if its probative value is substantially outweighed by unfair prejudice or by considerations of undue delay, waste of time, immateriality, or needless presentation of cumulative evidence.

(e) *Official notice*—(1) *Definition.* Official notice means use by the Presiding Officer of extra-record facts and legal conclusions drawn from those facts. An officially noticed fact or legal conclusion must be one not subject to reasonable dispute in that it is either (i) generally known within the jurisdiction of the Presiding Officer or (ii) known by the Presiding Officer in areas of his or her expertise; or (iii) capable of accurate and ready determination by resort to sources whose accuracy cannot reasonably be questioned.

(2) *Method of taking official notice.* The Presiding Officer may at any time take official notice upon motion of any party or upon its own initiative. The record shall reflect the facts and conclusions which have been officially noticed.

(3) *Opportunity to challenge.* Any party may upon application in writing rebut officially noticed facts and conclusions by supplementing the record. The Presiding Officer shall determine the permissible extent of this challenge; that is, whether to limit the party to presentation of written materials, whether to allow presentation of testimony, whether to allow cross-examination, or whether to allow oral argument. The Presiding Officer shall grant or deny the application on the record.

(f) *Objections and exceptions.* Objections to evidence shall be timely interposed, shall appear on the record, and shall contain the grounds upon which they are based. Rulings on all objections, and the bases therefore, shall appear on the record. Formal exception to an adverse ruling is not required to preserve the question for appeal.

(g) *Offer of proof.* When an objection to proffered testimony or documentary evidence is sustained, the sponsoring party may make a specific offer, either in writing or orally, of what the party expects to prove by the testimony or the document. When an offer of proof is made, any other party may make a specific offer, either in writing or orally, of what the party expects to present to rebut or contradict the offer of proof. Written offers of proof or of rebuttal, adequately marked for identification, shall accompany the record and be available for consideration by any reviewing authority.

§511.44 Expert witnesses.

(a) *Definition.* An expert witness is one who, by reason of education, training, experience, or profession, has peculiar knowlege concerning the matter of science or skill to which his or her testimony relates and from which he or she may draw inferences based upon hypothetically stated facts or from facts involving scientific or technical knowledge.

(b) *Method of presenting testimony of expert witness.* Except as may be otherwise ordered by the Presiding Officer, a detailed written statement of the elements of the direct testimony of an expert witness shall be filed on the record and exchanged between the parties no later than 10 days preceding the commencement of the hearing. The statement must contain a full explanation of the methodology underlying any analysis, and a full disclosure of the basis of any opinion. The direct testimony of an expert witness shall not include points not contained in the written statement. A party may waive direct examination of an expert witness by indicating that the written statement be considered the testimony of the witness. In such a case, the written testimony shall be incorporated into the record and shall constitute the testimony of the witness.

(c) *Cross-examination and redirect examination of expert witness.* Cross-examination, redirect examination, and recross-examination of an expert witness will proceed in due course based upon the written testimony and any amplifying oral testimony.

(d) *Failure to file and/or to exchange written statement.* Failure to file and/or to exchange the written statement of an expert witness as provided in this section shall deprive the sponsoring party of the use of the expert witness and of the conclusions which that witness would have presented.

§ 511.45 In camera materials.

(a) *Definition. In camera* materials are documents, testimony, or other data which by order of the Presiding Officer or the Administrator, as appropriate under this part, are kept confidential and excluded from the public record. Only materials exempt under the Freedom of Information Act may be kept confidential and excluded from the public record. Pursuant to 49 CFR part 512, the Chief Counsel of the NHTSA is responsible for determining whether an alleged confidential business record is exempt from the Freedom of Information Act. The right of the Presiding Officer, the Administrator and reviewing courts to order disclosure of *in camera* materials is specifically reserved.

(b) *In camera treatment of documents and testimony.* The Presiding Officer or the Administrator, as appropriate under this part, shall have authority, when good cause is found on the record, to order documents or testimony offered in evidence, whether admitted or rejected, to be received and preserved *in camera*. The order shall specify the length of time for *in camera* treatment and shall include:

(1) A description of the documents and/or testimony;

(2) The reasons for granting *in camera* treatment for the specified length of time.

(c) *Access and disclosure to parties.* (1) The Administrator and Presiding Officer, and their immediate advisory staffs shall have complete access to all *in camera* materials. All other parties shall also have complete access to all *in camera* materials, except that these parties may seek access only in accordance with paragraph (c)(2) of this section when:

(i) The *in camera* materials consist of information obtained by the government from persons not parties to the proceeding; or

(ii) The *in camera* materials consist of information provided by one of the parties to the proceeding which is confidential as to the other parties to the proceeding.

(2) Any party desiring access to and/or disclosure of the *in camera* materials specified in paragraph (c)(1) (i) and (ii) of this section for the preparation and presentation of that party's case shall make a motion which sets forth the justification therefor. The Presiding Officer or the Administrator, as appropriate under this part, may grant such motion on the record for substantial good cause shown and shall enter a protective order prohibiting unnecessary disclosure and requiring other necessary safeguards. The Presiding Officer or the Administrator, as appropriate, may examine the *in camera* materials and excise portions thereof before disclosing the materials to the moving party.

(d) *Segregation of* in camera *materials. In camera* materials shall be segregated from the public record and protected from public view.

(e) *Public release of* in camera *materials. In camera* materials constitute a part of the confidential records of the NHTSA and shall not be released to the public until the expiration of *in camera* treatment.

(f) *Reference to* in camera *materials.* In the submission of proposed findings, conclusions, briefs, or other documents, all parties shall refrain from disclosing specific details of *in camera* materials. Such refraining shall not preclude general references to such materials. To the extent that parties consider it necessary to include specific details of *in camera* materials, the references shall be incorporated into separate proposed findings, briefs, or other documents marked ''CONFIDENTIAL, CONTAINS *IN CAMERA* MATERIAL,'' which shall be placed *in camera* and become part of the *in camera* record. These documents shall be served only on parties accorded access to the *in*

camera materials in accordance with paragraph (c)(2) of this section.

§ 511.46 Proposed findings, conclusions, and order.

Within a reasonable time after the closing of the record and receipt of the transcript, all parties and participants may, simultaneously, file post-hearing briefs, including proposed findings of fact, conclusions of law and a proposed order, together with reasons therefore. The Presiding Officer shall establish a date certain for the filing of the briefs, which shall not exceed 45 days after the close of the record except in unusual circumstances. The briefs shall be in writing, shall be served upon all parties, and shall contain adequate references to the record and authorities relied on. Replies shall be filed within fifteen (15) days of the date for the filing of briefs unless otherwise established by the Presiding Officer. The parties and participants may waive either or both submissions.

§ 511.47 Record.

(a) *Reporting and transcription*. Hearings shall be recorded and transcribed under the supervision of the Presiding Officer by a reporter appointed by the Administrator. The original transcript shall be a part of the record and the official transcript. Copies of transcripts are available from the reporter at a cost not to exceed the maximum rates fixed by contract between the NHTSA and the reporter.

(b) *Corrections*. Corrections of the official transcript may be made only when they involve errors affecting substance and then only in the manner herein provided. The Presiding Officer may order corrections, either on his or her own motion or on motion of any party. The Presiding Officer shall determine the corrections to be made and so order. Corrections shall be interlineated or otherwise inserted in the official transcript so as not to obliterate the original text.

§ 511.48 Official docket.

(a) The official docket in adjudicatory proceedings will be maintained in the Docket Section, Office of the Secretary, Room 4107, 400 Seventh Street SW., Washington, DC 20590, and will be available for inspection during normal working hours (9:00 a.m.–5:00 p.m.) Monday through Friday.

(b) Fees for production or disclosure of records contained in the official docket shall be levied as prescribed in the Department of Transportation's regulations on Public Availability of Information (49 CFR part 7).

[53 FR 15783, May 3, 1988]

§ 511.49 Fees.

(a) *Witnesses*. Any person compelled to appear in person in response to a subpoena or notice of oral examination shall be paid at least the same attendance and mileage fees as are paid witnesses in the courts of the United States, in accordance with title 28, U.S.C., section 1821.

(b) *Responsibility*. The fees and mileage referred to in this section shall be paid by the party at whose instance witnesses appear.

Subpart F—Decision

§ 511.51 Initial decision.

(a) *When filed*. The Presiding Officer shall endeavor to file an Initial Decision with the Administrator within sixty (60) days of the close of the record, the filing of post-hearing briefs, or the filing of replies thereto, whichever is latest.

(b) *Content*. The Initial Decision shall be based upon a consideration of the entire record and it shall be supported by reliable, probative, and substantial evidence. It shall include:

(1) Findings and conclusions, as well as the reasons or bases therefor, upon the material questions of fact, material issues of law, or discretion presented on the record, and should, where practicable, be accompanied by specific page citations to the record and to legal and other materials relied upon.

(2) An appropriate order.

(c) *By whom made*. The Initial Decision shall be made and filed by the Presiding Officer who presided over the hearing, unless otherwise ordered by the Administrator.

(d) *Reopening of proceeding by presiding officer; termination of jurisdiction*. (1) At any time prior to or concomitant with the filing of the Initial Decision,

the Presiding Officer may reopen the proceedings for the reception of further evidence.

(2) Except for the correction of clerical errors, the jurisdiction of the Presiding Officer is terminated upon the filing of the Initial Decision, unless and until the proceeding is remanded to the Presiding Officer by the Administrator.

§ 511.52 Adoption of initial decision.

The Initial Decision and Order shall become the Final Decision and Order of the Administrator forty (40) days after issuance unless an appeal is noted and perfected or unless review is ordered by the Administrator. Upon the expiration of the fortieth day, the Executive Secretary shall prepare, sign and enter an order adopting the Initial Decision and Order.

§ 511.53 Appeal from initial decision.

(a) *Who may file notice of intention.* Any party may appeal an Initial Decision to the Administrator provided that within ten (10) days after issuance of the Initial Decision such party files and serves a notice of intention to appeal.

(b) *Appeal brief.* The appeal shall be in the form of a brief, filed within forty (40) days after service of the Initial Decision, duly served upon all parties and participants. The appeal brief shall contain, in the order indicated, the following:

(1) A subject index of the matters in the brief, with page references, and a table of cases (alphabetically arranged), textbooks, statutes, and other material cited, with page references thereto;

(2) A concise statement of the case;

(3) A specification of the position urged;

(4) The argument, presenting clearly the points of fact and law relied upon in support of the position on each question, with specific page references to the record and the legal or other material relied upon; and

(5) A proposed form of order for the Administrator's consideration in lieu of the order contained in the Initial Decision.

(c) *Answering brief.* Within thirty (30) days after service of the appeal brief upon all parties and participants, any party may file an answering brief which shall also contain a subject index, with page references, and a table of cases (alphabetically arranged), textbooks, statutes, and other material cited, with page references thereto. Such brief shall present clearly the points of fact and law relied upon in support of the position taken on each question, with specific page references to the record and legal or other material relied upon.

(d) *Participant's brief.* Within thirty (30) days after service of the appeal brief upon all parties and participants, any participant may file an appeal brief which should contain a subject index, with page references, and a table of authorities being relied upon. Such brief shall present clearly the position taken by the participant on each question raised by the appellant(s).

(e) *Cross appeal.* If a timely notice of appeal is filed by a party, any other party may file a notice of cross-appeal within ten (10) days of the date on which the first notice of appeal was filed. Cross-appeals shall be included in the answering brief and shall conform to the requirements for form, content and filing specified in paragraph (c) of this section. If an appeal is noticed but not perfected, no cross-appeal shall be permitted and the notice of cross-appeal shall be deemed void.

(f) *Reply brief.* A reply brief shall be limited to rebuttal of matters in answering briefs, including matters raised in cross-appeals. A reply brief shall be filed and within fourteen (14) days after service of an answering brief, or on the day preceding the oral argument, whichever comes first.

(g) *Oral argument.* The purpose of an oral argument is to emphasize and clarify the issues. Any party may request oral argument. The Administrator may order oral argument upon request or upon his or her own initiative. All oral arguments shall be reported and transcribed.

§ 511.54 Review of initial decision in absence of appeal.

The Administrator may, by order, review a case not otherwise appealed by a party. Thereupon the parties shall

and participants may file briefs in accordance with §511.53(b), (c), (d), (e), and (f) except that the Administrator may, in his or her discretion, establish a different briefing schedule in his or her order. Any such order shall issue within forty (40) days of issuance of the Initial Decision. The order shall set forth the issues which the Administrator will review.

§511.55 Final decision on appeal or review.

(a) Upon appeal from or review of an Initial Decision, the Administrator shall consider such parts of the record as are cited or as may be necessary to resolve the issues presented and, in addition, shall, to the extent necessary or desirable, exercise all the powers which he or she could have exercised if he or she had made the Initial Decision.

(b) In rendering his or her decision, the Administrator shall adopt, modify, or set aside the findings, conclusions, and order contained in the Initial Decision, and shall include in his or her Final Decision a statement of the reasons or bases for his or her action. The Administrator shall issue an order reflecting his or her Final Decision.

§511.56 Reconsideration.

Within twenty (20) days after issuance of a Final Decision and Order, any party may file with the Administrator a petition for reconsideration of such decision or order, setting forth the relief desired and the grounds in support thereof. Any party desiring to oppose such a petition shall file an answer thereto within ten (10) days after service of the petition. The filing of a petition for reconsideration shall not stay the effective date of the Decision and Order or toll the running of any statutory time period affecting the decision or order unless specifically so ordered by the Administrator.

§511.57 Effective date of order.

(a) *Consent orders.* An order which has been issued following acceptance of an offer of settlement in accordance with §511.26 becomes effective upon issuance.

(b) *Litigated orders.* All other orders become effective upon the expiration of the statutory period for court review specified in section 508(c)(1) of the Motor Vehicle Information and Cost Savings Act, title 15, U.S.C. section 2008(c)(1), Pub. L. 94–163, 89 Stat. 911, or, if a petition for review has been filed, upon court affirmance of the Administrator's order.

Subpart G—Settlement Procedure in Cases of Violation of Average Fuel Economy Standards

§511.61 Purpose.

This subpart establishes the procedures and requirements necessary to obtain a settlement of a case of violation of section 507 (1) or (2) of the Motor Vehicle Information and Cost Savings Act, as amended, Pub. L. 94–163, 89 Stat. 911 (15 U.S.C. section 2007(1)(2)). No settlement of such cases may be had except as in accordance with this subpart.

§511.62 Definitions.

Average fuel economy standard means an average fuel economy standard established by or pursuant to the Motor Vehicle Information and Cost Savings Act.

Insolvency means the inability to meet expenses when due.

Settlement means a compromise, modification, or remission of a civil penalty assessed under this part for a violation of an average fuel economy standard.

§511.63 Criteria for settlement.

Settlement of a case of violation of an average fuel economy standard is discretionary with the Administrator. The Administrator will consider settlement only to the extent:

(a) Necessary to prevent the insolvency or bankruptcy of the person seeking settlement, or

(b) That the violation of the average fuel economy standard resulted, as shown by the person seeking settlement, from an act of God, a strike, or fire, or

(c) That modification of a civil penalty assessed under this part is necessary to prevent lessening of competition, as determined and as certified by the Federal Trade Commission under section 508(b)(4) of the Motor Vehicle

Information and Cost Savings Act, Pub. L. 94–163, 89 Stat. 911 (15 U.S.C. section 2008(b)(4)).

§ 511.64 Petitions for settlement; timing, contents.

(a) A petition seeking settlement under this subpart must be filed within 30 days after the issuance of a final order assessing a civil penalty for a violation of an average fuel economy standard.

(b)(1) A petition for settlement should be sufficient to allow the Administrator to determine that at least one of the criteria set out in § 511.63 is satisfied, and that the public interest would be served by settlement.

(2) A petition asserting that settlement is necessary to prevent bankruptcy or insolvency must include:

(i) Copies of all pertinent financial records, auditor's reports, and documents that show that the imposition of a civil penalty would cause insolvency, or would cause a company to do an act of bankruptcy, and

(ii) A payment schedule that would allow the petitioner to pay a civil penalty without resulting in insolvency or an act of bankruptcy.

(3) A petition asserting that the violation of the average fuel economy standard was caused by an act of God, fire, or strike must describe corrective and ameliorative steps taken to mitigate the effects of the act of God, fire, or strike.

(4) A petition based on a certification by the Federal Trade Commission that modification of the civil penalty assessed is necessary to prevent a substantial lessening of competition must include a certified copy of:

(i) The application to the Federal Trade Commission for a certification under section 508(b)(4) of the Motor Vehicle Information and Cost Savings Act, Pub. L. 94–163, 89 Stat. 911 (15 U.S.C. 2008(b)(4)), and materials supporting the application.

(ii) The administrative record of any Federal Trade Commission proceeding held in regard to the application, and

(iii) The certification by the Federal Trade Commission.

(c) It is the policy of the National Highway Traffic Safety Administration that unconditional settlements of violations of average fuel economy standards are not in the public interest, and absent special and extraordinary circumstances, will not be allowed. All petitions for settlement shall contain a section proposing conditions for settlement. Conditions for settlement can be specific acts designed to lead to the reduction of automotive fuel consumption, which the petitioner is not otherwise required to perform pursuant to any statute, regulation, or administrative or judicial order, such as sponsoring public education programs, advertising, accelerating commercial application of technology, accelerating technology development programs, or making public the results of privately performed studies, surveys, or research activities.

§ 511.65 Public comment.

Notice and opportunity for comment are provided to the public in regard to settlements under this part. Subject to § 511.66, notice of receipt of a petition for settlement is published in the FEDERAL REGISTER, and a copy of such petitions and any supporting information is placed in a public docket. Any settlement agreed to by the Administrator shall be placed in the public docket for 30 days so that interested persons may comment thereon. No settlement is binding until the completion of that thirty day period.

§ 511.66 Confidential business information.

The Administrator shall have authority to segregate from the public docket and to protect from public view information in support of a petition for settlement which has been determined to be confidential business information. The provisions of 15 U.S.C. 2005(d) pertaining to discretionary release by the Administrator of and to limited disclosure of information determined to be confidential business information shall apply to this section.

§ 511.67 Settlement order.

If, in accordance with this subpart, the Administrator allows a settlement of a case of violation of an average fuel economy standard, an order of settlement shall be issued, setting out the

terms of the settlement, and containing a brief discussion of the factors underlying the exercise of the Administrator's discretion in allowing the settlement, including a discussion of comments received under § 511.65. If the Administrator rejects a petition for settlement, the Administrator shall give written notice of the rejection and the reasons for the rejection to the parties and the Presiding Officer.

[53 FR 15783, May 3, 1988]

Subpart H—Appearances; Standards of Conduct

§ 511.71 Who may make appearances.

A party or participant may appear in person, or by a duly authorized officer, partner, regular employee, or other agent of this party or participant, or by or with counsel or other duly qualified representative, in any proceeding under this part.

§ 511.72 Authority for representation.

Any individual acting in a representative capacity in any adjudicative proceeding may be required by the Presiding Officer or the Administrator to show his or her authority to act in such capacity. A regular employee of a party who appears on behalf of the party shall be required by the Presiding Officer or the Administrator to show his or her authority to so appear.

§ 511.73 Written appearances.

(a) Any person who appears in a proceeding shall file a written notice of appearance with the Executive Secretary or deliver a written notice of appearance to the reporter at the hearing, stating for whom the appearance is made and the name, address, and telephone number (including area code) of the person making the appearance and the date of the commencement of the appearance. The written appearance shall be made a part of the record.

(b) Any person who has previously appeared in a proceeding may withdraw his or her appearance by filing a written notice of withdrawal of appearance with the Docket Section. The notice of withdrawal shall state the name, address, and telephone number (including area code) of the person withdrawing the appearance, for whom the appearance was made, and the effective date of the withdrawal of the appearance, and such notice of withdrawal shall be filed within five (5) days of the effective date of the withdrawal of the appearance.

[45 FR 81578, Dec. 11, 1980, as amended at 53 FR 15783, May 3, 1988]

§ 511.74 Attorneys.

An attorney at law who is admitted to practice before the Federal courts or before the highest court of any State, the District of Columbia, or any territory or Commonwealth of the United States, may practice before the NHTSA. An attorney's own representation that he or she is in good standing before any of such courts shall be sufficient proof thereof, unless otherwise ordered by the Presiding Officer or the Administrator.

§ 511.75 Persons not attorneys.

(a) Any person who is not an attorney at law may be admitted to appear in an adjudicative proceeding if that person files proof to the satisfaction of the Presiding Officer that he or she possesses the necessary legal, technical or other qualifications to render valuable service in the proceeding and is otherwise competent to advise and assist in the presentation of matters in the proceedings. An application by a person not an attorney at law to appear in a proceeding shall be submitted in writing to the Docket Section, not later than thirty (30) days prior to the hearing in the proceedings. The application shall set forth the applicant's qualifications to appear in the proceedings.

(b) No person who is not an attorney at law and whose application has not been approved shall be permitted to appear in the Administration's proceedings. However, this provision shall not apply to any person who appears before the NHTSA on his or her own behalf or on behalf of any corporation, partnership, or association of which the person is a partner, officer, or regular employee.

[45 FR 81578, Dec. 11, 1980, as amended at 53 FR 15784, May 3, 1988]

§ 511.76 Qualifications and standards of conduct.

(a) The NHTSA expects all persons appearing in proceedings before it to act with integrity, with respect, and in an ethical manner. Business transacted before and with the NHTSA shall be in good faith.

(b) To maintain orderly proceedings, the Presiding Officer or the Administrator, as appropriate under this part, may exclude parties, participants, and their representatives for refusal to comply with directions, continued use of dilatory tactics, refusal to adhere to reasonable standards of orderly and ethical conduct, failure to act in good faith, or violation of the prohibition against certain ex parte communications. The Presiding Officer may, in addition to the above sanctions, deny access to additional *in camera* materials when a party or participant publicly releases such materials without authorization.

(c) An excluded party, participant, or representative thereof may petition the Administrator to entertain an interlocutory appeal in accordance with § 511.24. If, after such appeal, the representative of a party or participant, is excluded, the hearing shall, at the request of the party or participant, be suspended for a reasonable time so that the party or participant may obtain another representative.

§ 511.77 Restrictions as to former members and employees.

The postemployee restrictions applicable to former Administrators and NHTSA employees, as set forth in 18 U.S.C. 207, shall govern the activities of former Administrators and NHTSA employees in matters connected with their former duties and responsibilities.

§ 511.78 Prohibited communications.

(a) *Applicability*. This section is applicable during the period commencing with the date of issuance of a complaint and ending upon final NHTSA action in the matter.

(b) *Definitions*. (1) ''Decision-maker'' means those NHTSA personnel who render decisions in adjudicative proceedings under this part, or who advise officials who render such decisions, including:

(i) The Administrator,

(ii) The Administrative Law Judges;

(2) ''Ex parte communication'' means:

(i) Any written communication other than a request for a status report on the proceeding made to a decisionmaker by any person other than a decisionmaker which is not served on all parties,

(ii) Any oral communication other than a request for a status report on the proceeding made to a decisionmaker by any person other than a decisionmaker without advance notice to the parties to the proceeding and opportunity for them to be present.

(c) *Prohibited ex parte communications*. Any oral or written ex parte communication relative to the merits of a proceeding under this part is a prohibited ex parte communication, except as provided in paragraph (d) of this section.

(d) *Permissible ex parte communications*. The following communications shall not be prohibited under this section:

(1) Ex parte communications authorized by statute or by this part.

(2) Any staff communication concerning judicial review or judicial enforcement in any matter pending before or decided by the Administrator.

(e) *Procedures for handling prohibited ex parte communication*. (1) Prohibited written *ex parte* communication. To the extent possible, a prohibited written *ex parte* communication received by any NHTSA employee shall be forwarded to the Docket Section rather than to a decisionmaker. A prohibited written *ex parte* communication which reaches a decisionmaker shall be forwarded by the decisionmaker to the Docket Section. If the circumstances in which a prohibited *ex parte* written communication was made are not apparent from the communication itself, a statement describing those circumstances shall be forwarded with the communication.

(2) Prohibited oral *ex parte* communication. (i) If a prohibited oral ex parte communication is made to a decisionmaker, he or she shall advise the person making the communication that the communication is prohibited and shall terminate the discussion.

(ii) In the event of a prohibited oral *ex parte* communication, the decision-maker shall forward to the Docket Section a dated statement containing such of the following information as is known to him/her:

(A) The title and docket number of the proceeding;

(B) The name and address of the person making the communication and his/her relationship (if any) to the parties to the proceeding;

(C) The date and time of the communication, its duration, and the circumstances (telephone call, personal interview, etc.) under which it was made;

(D) A brief statement of the substance of the matters discussed;

(E) Whether the person making the communication persisted in doing so after being advised that the communication was prohibited.

(3) All communications and statements forwarded to the Docket Section under this section shall be placed in the public file which shall be associated with, but not made a part of, the record of the proceedings to which the communication or statement pertains.

(4) Service on parties. The Administrator shall serve a copy of each communication and statement forwarded under this section on all parties to the proceedings. However, if the parties are numerous, or if other circumstances satisfy the Administrator that service of the communication or statement would be unduly burdensome, he or she may, in lieu of service, notify all parties in writing that the communication or statement has been made and filed and that it is available for inspection and copying.

(5) Service on maker. The Administrator shall forward to the person who made the prohibited *ex parte* communication a copy of each communication or statement filed under this section.

(f) *Effect of ex parte communications.* No prohibited ex parte communication shall be considered as part of the record for decision unless introduced into evidence by a party to the proceedings.

(g) *Sanctions.* A party or participant who makes a prohibited ex parte communication, or who encourages or solicits another to make any such communication, may be subject to any appropriate sanction or sanctions, including, but not limited to, exclusion from the proceedings and adverse rulings on the issues which are the subject of the prohibited communication.

[45 FR 81578, Dec. 11, 1980, as amended at 53 FR 15784, May 3, 1988]

APPENDIX I—FINAL PREHEARING ORDER

Case Caption

Final Prehearing Order

A prehearing conference was held in this matter pursuant to Rule 21 of the Administration's Rules of Practice for Adjudicative Proceedings, on the _____ day of _____, 19____, at ____ o'clock __ M.

Counsel appeared as follows:

For the Administration staff:

For the Respondent(s):

Others:

1. NATURE OF ACTION AND JURISDICTION.

This is an action for _____

_____

and the jurisdiction of the Administration is involved under Section ____ of Title —. U.S.C. The jurisdiction of the Administration is (not) disputed. The questions of jurisdiction was decided as follows:

2. STIPULATIONS AND STATEMENTS.

The following stipulations and statements were submitted, attached to, and made a part of this order:

(a) A comprehensive written stipulation or statement of all uncontested facts;

(b) A concise summary of the ultimate facts as claimed by each party. (Complaint Counsel must set forth the claimed facts, specifically; for example, if violation is claimed, Complaint Counsel must assert specifically the acts of violation complained of; each respondent must reply with equal clarity and detail.)

(c) Written stipulations or statements setting forth the qualifications of the expert witnesses to be called by each party;

(d) A written list or lists of the witnesses whom each party will call, a written list or lists of the additional witnesses whom each party *may* call, and a statement of the subject on which each witness will testify;

(e) An agreed statement of the contested issues of fact and of law, and/or separate statements by each party or any contested issues of fact and law not agreed to;

(f) A list of all depositions to be read into evidence and statements of any objections thereto;

(g) A list and brief description of any charts, graphs, models, schematic diagrams, and similar objects that will be used in opening statements or closing arguments, but will not be offered in evidence. If any other such objects are to be used by any party, they will be submitted to opposing counsel at least three days prior to hearing. If there is then any objection to their use, the dispute will be submitted to the Presiding Officer at least one day prior to hearing;

(h) Written waivers of claims or defenses which have been abandoned by the parties.

The foregoing were modified at the pretrial conference as follows:

[To be completed at the conference itself. If none, recite ''none'']

3. COMPLAINT COUNSEL'S EVIDENCE.

3.1 The following exhibits were offered by Complaint Counsel, received in evidence, and marked as follows:

[Identification number and brief description of each exhibit]

The authenticity of these exhibits has been stipulated.

3.2 The following exhibits were offered by the Complaint Counsel and marked for identification. There was reserved to the respondent(s) and party intervenors, if any, the right to object to their receipt in evidence on the grounds stated:

[Identification number and brief description of each exhibit. State briefly ground of objection, e.g., competency, relevancy, materiality]

4. RESPONDENT'S EVIDENCE.

4.1 The following exhibits were offered by the respondent(s), received in evidence, and marked as herein indicated:

[Identification number and brief description of each exhibit]

The authenticity of these exhibits has been stipulated.

4.2 The following exhibits were offered by the respondent(s) and marked for identification. There was reserved to Complaint Counsel and party intervenors, if any, the right to object to their receipt in evidence on the grounds stated:

[Identification number and brief description of each exhibit. State briefly ground of objection, e.g., competency, relevancy, materiality]

5. ADDITIONAL ACTIONS.

The following additional action was taken:

[Amendments to pleadings, agreements of the parties, disposition of motions, separation of issues of liability and remedy, etc., if necessary]

6. LIMITATIONS AND RESERVATIONS.

6.1 Each of the parties has the right to further supplement the list of witnesses not later than ten (10) days prior to trial by furnishing opposing counsel with the name and address of the witness and general subject matter of his or her testimony and filing a supplement to this pretrial order. Thereafter additional witnesses may be added only after application to the Presiding Officer, for good cause shown.

6.2 Rebuttal witnesses not listed in the exhibits to this order may be called only if the necessity of their testimony could not reasonably be foreseen ten (10) days prior to trial. If it appears to counsel at any time before trial that such rebuttal witnesses will be called, notice will immediately be given to opposing counsel and the Presiding Officer.

6.3 The probable length of hearing is — days. The hearings will be commenced on the ____ day of _____, 19____, at ____ o'clock __ M. at (location) _____.

6.4 Prehearing briefs will be filed not later than 5:00 p.m. on _____. (Insert date not later than ten (10) days prior to hearing.) All anticipated legal questions, including those relating to the admissibility of evidence, must be covered by prehearing briefs.

This prehearing order has been formulated after a conference at which counsel for the respective parties appeared. Reasonable opportunity has been afforded counsel for corrections or additions prior to signing. It will control the course of the hearing, and it may not be amended except by consent of the parties and the Presiding Officer, or by order of the Presiding Officer to prevent manifest injustice.

_____

(Presiding Officer's Name)
(Presiding Officer's Title)

APPROVED AS TO FORM AND SUBSTANCE

Date: _____.

_____

Complaint Counsel.

_____

Attorney for Respondent(s).

NOTE: Where intervenors appear pursuant to §511.17 the prehearing order may be suitably modified; the initial page may be modified to reflect the intervention.

PART 512—CONFIDENTIAL BUSINESS INFORMATION

Sec.

512.1 Purpose and scope.
512.2 Applicability.
512.3 Definitions.

512.4 Asserting a claim for confidential treatment of information.
512.5 Substantive standards for affording confidential treatment.
512.6 Determination of confidential treatment.
512.7 Petitions for reconsideration upon denial of a request for confidential treatment.
512.8 Modification of confidentiality determinations.
512.9 Release of confidential business information.
512.10 Class determinations.
APPENDIX A TO PART 512—CERTIFICATE IN SUPPORT OF REQUEST FOR CONFIDENTIALITY
APPENDIX B TO PART 512—CLASS DETERMINATIONS
APPENDIX C TO PART 512—OMB CLEARANCE

AUTHORITY: 49 U.S.C. 322; 5 U.S.C. 552; 15 U.S.C. 1401; 15 U.S.C. 1402; 15 U.S.C. 1407; 15 U.S.C. 1418; 15 U.S.C. 1914; 15 U.S.C. 1944; 15 U.S.C. 1990d; 15 U.S.C. 2005; 15 U.S.C. 2029; delegation of authority at 49 CFR 1.50.

SOURCE: 54 FR 48895, Nov. 28, 1989, unless otherwise noted.

§512.1 Purpose and scope.

The purpose of this part is to establish the procedure by which NHTSA will consider claims that information submitted to the agency, or which the agency otherwise obtains, is confidential business information, as described in 5 U.S.C. 552(b)(4).

§512.2 Applicability.

(a) This part applies to all information which is submitted to NHTSA, or which NHTSA otherwise obtains, except as provided in paragraph (b) of this section.

(b) Information received as part of the procurement process is subject to the Federal Acquisition Regulation, 48 CFR, Chapter 1, as well as this part. In any case of conflict between the Federal Acquisition Regulation and this part, the provisions of the Federal Acquisition Regulation prevail.

§512.3 Definitions.

Administrator means the Administrator of the National Highway Traffic Safety Administration.

Chief Counsel means the Chief Counsel of the National Highway Traffic Safety Administration.

Confidential business information means information described in 5 U.S.C. 552(b)(4).

NHTSA means the National Highway Traffic Safety Administration.

Substantial competitive harm encompasses ''significant competitive damage'' under title V of the Motor Vehicle Information and Cost Savings Act, 15 U.S.C. 2001 *et seq.*

§512.4 Asserting a claim for confidential treatment of information.

(a) Any person submitting information to NHTSA and requesting that the information be withheld from public disclosure as confidential business information shall:

(1) Stamp or mark ''confidential,'' or some other term which clearly indicates the presence of information claimed to be confidential, on the top of each page containing information claimed to be confidential.

(2) On each page marked in accordance with paragraph (a)(1) of this section, mark each item of information which is claimed to be confidential with brackets''[ ]''.

(3) If an entire page is claimed to be confidential, indicate clearly that the entire page is claimed to be confidential.

(4) Submit two copies of the documents containing allegedly confidential information (except only one copy of blueprints) and one copy of the documents from which information claimed to be confidential has been deleted to the Office of Chief Counsel, National Highway Traffic Safety Administration, Room 5219, 400 Seventh Street, SW., Washington, DC 20590. Include the name, address, and telephone number of a representative for receipt of a response from the Chief Counsel under this part.

(5) If a document containing information claimed to be confidential is submitted in connection with an investigation or proceeding, a rulemaking action, or pursuant to a reporting requirement, for which there is a public file or docket, simultaneously submit to the appropriate NHTSA official a copy of the document from which information claimed to be confidential has been deleted. This copy will be placed in the public file or docket pending the

resolution of the claim for confidential treatment.

(b)(1) When submitting each item of information marked confidential in accordance with paragraph (a) of this section, the submitter shall also submit to the Office of the Chief Counsel information supporting the claim for confidential treatment in accordance with paragraph (b)(3) and paragraph (e) of this section.

(2) If submission of the supporting information is not possible at the time the allegedly confidential information is submitted, a request for an extension of time in which to submit the information, accompanied by an explanation describing the reason for the extension and the length of time needed, must be submitted. The Chief Counsel shall determine the length of the extension. The recipient of an extension shall submit the supporting information in accordance with the extension determination made by the Chief Counsel and paragraph (b)(3) of this section.

(3) The supporting information must show:

(i) That the information claimed to be confidential is a trade secret, or commercial or financial information that is privileged or confidential.

(ii) Measures taken by the submitter of the information to ensure that the information has not been disclosed or otherwise made available to any person, company, or organization other than the submitter of the information.

(iii) Insofar as is known by the submitter of the information, the extent to which the information has been disclosed, or otherwise become available, to persons other than the submitter of the information, and why such disclosure or availability does not compromise the confidential nature of the information.

(iv) Insofar as is known by the submitter of the information, the extent to which the information has appeared publicly, regardless of whether the submitter has authorized that appearance or confirmed the accuracy of the information. The submitter must include citations to such public appearances, and an explanation of why such appearances do not compromise the confidential nature of the information.

(v) Prior determinations of NHTSA or other Federal agencies or Federal courts relating to the confidentiality of the submitted information, or similar information possessed by the submitter including class determinations under this part. The submitter must include any written notice or decision connected with any such prior determination, or a citation to any such notice or decision, if published in the FEDERAL REGISTER.

(vi) Whether the submitter of the information asserts that disclosure would be likely to result in substantial competitive harm, what the harmful effects of disclosure would be, why the effects should be viewed as substantial, and the causal relationship between the effects and disclosure.

(vii) If information is voluntarily submitted, why disclosure by NHTSA would be likely to impair NHTSA's ability to obtain similar information in the future.

(viii) Whether the submitter of the information asserts that disclosure would be likely to impair other protectable government interests, what the effect of disclosure is likely to be and why disclosure is likely to impair such interests.

(ix) The period of time for which confidentiality is claimed (permanently or until a certain date or until the occurrence of a certain event) and why earlier disclosure would result in the harms set out in paragraph (b)(2)(vi), (vii) or (viii) of this section.

(c) If any element of the showing to support a claim for confidentiality required under paragraph (b)(3) of this section is presumptively established by a class determination, as issued pursuant to § 512.10, affecting the information for which confidentiality is claimed, the submitter of information need not establish that element again.

(d) Information in support of a claim for confidentiality submitted to NHTSA under paragraph (b) of this section must consist of objective data to the maximum extent possible. To the extent that opinions are given in support of a claim for confidential treatment of information, the submitter of the information shall submit in writing to NHTSA the basis for the opinions, and the name, title and credentials

showing the expertise of the person supplying the opinion.

(e) The submitter of information for which confidential treatment is requested shall submit to NHTSA with the request a certification in the form set out in appendix A from the submitter or an agent of the submitter that a diligent inquiry has been made to determine that the information has not been disclosed, or otherwise appeared publicly, except as indicated in accordance with paragraphs (b)(3)(iii) and (iv) of this section.

(f) A single submission of supporting information, in accordance with paragraph (b) of this section, may be used to support a claim for confidential treatment of more than one item of information claimed to be confidential. However, general or nonspecific assertions or analysis may be insufficient to form an adequate basis for the agency to find that information may be afforded confidential treatment, and may result in the denial of a claim for confidentiality.

(g) Where confidentiality is claimed for information obtained by the submitter from a third party, such as a supplier, the submitter of the information is responsible for obtaining all information and a certification from the third party necessary to comply with paragraphs (b), (d) and (e) of this section.

(h) Information received by NHTSA that is identified as confidential and whose claim for confidentiality is submitted in accordance with this section will be kept confidential until a determination of its confidentiality is made under section 512.6 of this part. Such information will not be publicly disclosed except in accordance with this part.

(i) A submitter of information shall promptly amend supporting information provided under paragraphs (b) or (e) of this section if the submitter obtains information upon the basis of which the submitter knows that the supporting information was incorrect when provided, or that the supporting information, though correct when provided, is no longer correct and the circumstances are such that a failure to amend the supporting information is in substance a knowing concealment.

(j) Noncompliance with this section may result in a denial of a claim for confidential treatment of information. Noncompliance with paragraph (i) of this section may subject a submitter of information to civil penalties.

(l) If the submitter fails to comply with paragraph (a) of this section at the time the information is submitted to NHTSA so that the agency is not aware of a claim for confidentiality, or the scope of a claim for confidentiality, the claim for confidentiality may be waived unless the agency is notified of the claim before the information is disclosed to the public. Placing the information in a public docket or file is disclosure to the public within the meaning of this part, and any claim for confidential treatment of information disclosed to the public may be precluded.

(2) If the submitter of the information does not provide all of the supporting information required in paragraphs (b)(3) and (e) of this section, or if the information is insufficient to establish that the information may be afforded confidential treatment under the substantive tests set out in §512.5, a request that such information be afforded confidential protection may be denied. The Chief Counsel may notify a submitter of information of inadequacies in the supporting information, and may allow the submitter additional time to supplement the showing, but is under no obligation to provide either notice or additional time to supplement the showing.

§512.5 Substantive standards for affording confidential treatment.

Information submitted to or otherwise obtained by NHTSA may be afforded confidential treatment if it is a trade secret, or commercial or financial information that is privileged or confidential. Information is considered to be confidential when:

(a) Disclosure of the information would be likely to result in substantial competitive harm to the submitter of the information; or

(b) Failure to afford the information confidential treatment would impair the ability of NHTSA to obtain similar information in the future; or

(c) Disclosure of the information would be likely to impair other protectable government interests.

§ 512.6 Determination of confidential treatment.

(a) The decision as to whether an item of information shall be afforded confidential treatment under this part is made by the Office of Chief Counsel.

(b) Copies of documents submitted to NHTSA under § 512.4(a)(5), from which information claimed to be confidential or privileged has been deleted, are placed in the public file or docket pending the resolution of the claim for confidential treatment.

(c) When information claimed to be confidential or privileged is requested under the Freedom of Information Act, the determination of confidentiality is made within ten working days after NHTSA receives such a request, or within twenty working days in unusual circumstances as provided under 5 U.S.C. 552(a)(6).

(d) For information not requested pursuant to the Freedom of Information Act, the determination of confidentiality is made within a reasonable period of time at the discretion of the Chief Counsel.

(e) The time periods prescribed in paragraph (c) of this section may be extended by the Chief Counsel for good cause shown on the Chief Counsel's own motion, or on request from any person. An extension is made only in accordance with 5 U.S.C. 552, and is accompanied by a written statement setting out the reasons for the extension.

(f) If the Chief Counsel believes that information which a submitter of information asserts to be within a class of information set out in appendix B is not within that class, the Chief Counsel:

(1) Notifies the submitter of the information that the information does not fall within the class as claimed, and briefly explains why the information does not fall within the class; and

(2) Renders a determination of confidentiality in accordance with paragraph (g) of this section.

(g) A person submitting information to NHTSA with a request that the information be withheld from public disclosure as confidential or privileged business information is given notice of the Chief Counsel's determination regarding the request as soon as the determination is made.

(1) If a request for confidentiality is granted, the submitter of the information is notified in writing of that determination and of any appropriate limitations.

(2) If a request for confidentiality is denied in whole or in part, the submitter of the information is notified in writing of that decision, and is informed that the information will be made available to the public not less than ten working days after the submitter of the information has received notice of the denial of the request for confidential treatment, if practicable, or some earlier date if the Chief Counsel determines in writing that the public interest requires that the information be made available to the public on such earlier date. The written notification of a denial specifies the reasons for denying the request.

(h) There will be no release of information processed pursuant to this section until the Chief Counsel advises the appropriate office(s) of NHTSA that the confidentiality decision is final according to this section, § 512.7 or § 512.9.

§ 512.7 Petitions for reconsideration upon denial of a request for confidential treatment.

(a) A submitter of information whose request for confidential treatment is denied may petition for reconsideration of that denial. Petitions for reconsideration must be addressed to and received by the Office of Chief Counsel prior to the date on which the information would otherwise be made available to the public. The determination by the Chief Counsel upon such petition for reconsideration shall be administratively final.

(b) If the submission of a petition for reconsideration is not feasible by the date on which the information would otherwise be made available to the public, a request for an extension of time in which to submit a petition, accompanied by an explanation describing the reason for the request and the length of time needed, must be received by the Office of Chief Counsel by

that date. The Chief Counsel determines whether to grant or deny the extension and the length of the extension.

(c) Upon receipt of a petition or request for an extension, the Chief Counsel shall postpone making the information available to the public in order to consider the petition, unless the Chief Counsel determines in writing that disclosure would be in the public interest.

(d) If a petition for reconsideration is granted, the petitioner is notified in writing of that determination and of any appropriate limitations.

(e) If a petition for reconsideration is denied in whole or in part or a request for an extension for additional time to submit a petition for reconsideration is denied, the petitioner is notified in writing of that denial, and is informed that the information will be made available to the public not less than ten working days after the petitioner has received notice of the denial of the petition, if practicable, or some earlier date if the Chief Counsel determines in writing that the public interest requires that the information be made available to the public on such earlier date. The written notification of a denial specifies the reasons for denying the petition.

§512.8 Modification of confidentiality determinations.

(a) A determination that information is confidential or privileged business information remains in effect in accordance with its terms, unless modified by a later determination based upon:

(1) Newly discovered or changed facts,

(2) A change in the applicable law,

(3) A class determination under §512.10, or

(4) A finding that the prior determination is clearly erroneous.

(b) If NHTSA believes that an earlier determination of confidentiality should be modified based on one or more of the factors listed in paragraph (a)(1) through (a)(4) of this section, the submitter of the information is notified in writing that NHTSA has modified its earlier determination and of the reasons for that modification, and is informed that the information will be made available to the public in not less than ten working days from the date of receipt of notice under this paragraph. The submitter may seek reconsideration of the modification pursuant to §512.7.

§512.9 Release of confidential business information.

(a) Information that has been claimed or determined to be confidential business information under §§512.4, 512.6 or 512.7 may be disclosed to the public by the Administrator notwithstanding such determination or claim if disclosure would be in the public interest as follows:

(1) Information obtained under Part A, Subchapter I of the National Traffic and Motor Vehicle Safety Act, relating to the establishment, amendment, or modification of Federal motor vehicle safety standards, may be disclosed when relevant to a proceeding under the part.

(2) Information obtained under Part B, Subchapter I of the National Traffic and Motor Vehicle Safety Act, relating to motor vehicle safety defects, and failures to comply with applicable motor vehicle safety standards, may be disclosed if the Administrator determines that disclosure is necessary to carry out the purposes of the Act.

(3) Information obtained under title I, V or VI of the Motor Vehicle Information and Cost Savings Act may be disclosed when that information is relevant to a proceeding under the title under which the information was obtained.

(b) No information is disclosed under this section unless the submitter of the information is given written notice of the Administrator's intention to disclose information under this section. Written notice is normally given at least ten working days before the day of release, although the Administrator may provide shorter notice if the Administrator finds that such shorter notice is in the public interest. The notice under this paragraph includes a statement of the Administrator's reasons for determining to disclose the information, and affords the submitter of the information an opportunity to comment on the contemplated release of information. The Administrator may

also give notice of the contemplated release of information to other persons, and may allow these persons the opportunity to comment. When a decision is made to release information pursuant to this section, the Administrator will consider ways to make the release with the least possible adverse effects to the submitter.

(c) Notwithstanding any other provision of this part, information which has been determined or claimed to be confidential business information, may be released:

(1) To Congress;

(2) Pursuant to an order of a court with valid jurisdiction;

(3) To the Office of the Secretary, United States Department of Transportation and other Executive branch offices or other Federal agencies in accordance with applicable laws;

(4) With the consent of the submitter of the information;

(5) To contractors, if necessary for the performance of a contract with the Administration. In such instances, the contract limits further release of the information to named employees of the contractor with a need to know and provides that unauthorized release constitutes a breach of the contract for which the contractor may be liable to third parties.

§ 512.10 Class determinations.

(a) The Chief Counsel may issue a class determination relating to confidentiality under this section if the Chief Counsel determines that one or more characteristics common to each item of information in that class will in most cases necessarily result in identical treatment of each item of information under this part, and that it is appropriate to treat all such items as a class for one or more purposes under this part. The Chief Counsel obtains the concurrence of the Office of the General Counsel, United States Department of Transportation, for any class determination that has the effect of raising the presumption that all information in that class is eligible for confidential treatment. Class determinations are published in the FEDERAL REGISTER.

(b) A class determination clearly identifies the class of information to which it pertains.

(c) A class determination may state that all of the information in the class:

(1) Is or is not governed by a particular section of this part, or by a particular set of substantive criteria under this part,

(2) Fails to satisfy one or more of the applicable substantive criteria, and is therefore ineligible for confidential treatment,

(3) Satisfies one or more of the applicable substantive criteria, and is therefore eligible for confidential treatment, or,

(4) Satisfies one of the substantive criteria during a certain period of time, but will be ineligible for confidential treatment thereafter.

(d) Class determinations will have the effect of establishing rebuttable presumptions, and do not conclusively determine any of the factors set out in paragraph (c) of this section.

APPENDIX A TO PART 512—CERTIFICATE IN SUPPORT OF REQUEST FOR CONFIDENTIALITY

Certificate in Support of Request for Confidentiality

I, _____, pursuant to the provisions of 49 CFR 512, state as follows:

(1) I am (official) and I am authorized by (company) to execute documents on behalf of (company):

(2) The information contained in (pertinent document[s]) is confidential and proprietary data and is being submitted with the claim that it is entitled to confidential treatment under 5 U.S.C. § 522(b)(4) (as incorporated by reference in and modified by the statute under which the information is being submitted.)

(3) I have personally inquired of the responsible (company) personnel who have authority in the normal course of business to release the information for which a claim of confidentiality has been made to ascertain whether such information has ever been released outside (company).

(4) Based upon such inquiries, to the best of my knowledge, information and belief the information for which (company) has claimed confidential treatment has never been released or become available outside (company) except as hereinafter specified:

(5) I make no representations beyond those contained in this certificate and in particular, I make no representations as to

whether this information may become available outside (company) because of unauthorized or inadvertent disclosure except as stated in Paragraph 4; and

(6) I certify under penalty of perjury that the foregoing is true and correct. Executed on this the _____. (If executed outside of the United States of America: I certify under penalty of perjury under the laws of the United States of America that the foregoing is true and correct.)

(signature of official)/EXTRACT≤

APPENDIX B TO PART 512—CLASS DETERMINATIONS

The Administration has determined that the following types of information would presumptively be likely to result in substantial competitive harm if disclosed to the public:

(1) Blueprints and engineering drawings containing process of production data where the subject could not be manufactured without the blueprints or engineering drawings except after significant reverse engineering;

(2) Future specific model plans (to be protected only until the date on which the specific model to which the plan pertains is first offered for sale);

(3) Future vehicle production or sales figures for specific models (to be protected only until the termination of the production period for the model year vehicle to which the information pertains).

APPENDIX C TO PART 512—OMB CLEARANCE

The OMB Clearance number for this regulation is 2127–0025.

PART 520—PROCEDURES FOR CONSIDERING ENVIRONMENTAL IMPACTS

Subpart A—General

Sec.
520.1 Purpose and scope.
520.2 Policy.
520.3 Definitions.
520.4 Applicability.
520.5 Guidelines for identifying major actions significantly affecting the environment.

Subpart B—Procedures

520.21 Preparation of environmental reviews, negative declarations, and notices of intent.
520.22 Maintenance of a list of actions.
520.23 Preparation of draft environmental impact statements.
520.24 Internal processing of draft environmental impact statements.
520.25 External review of draft environmental impact statements.
520.26 Public hearings.
520.27 Legislative actions.
520.28 Preparation of final environmental impact statements.
520.29 Internal review of final environmental impact statements.
520.30 Availability of final environmental impact statements.
520.31 Amendments or supplements.
520.32 Emergency action procedures.
520.33 Timing of proposed NHTSA actions.
520.34 Comments on environmental statements prepared by other agencies.
ATTACHMENT 1—FORM AND CONTENT OF STATEMENT
ATTACHMENT 2—AREAS OF ENVIRONMENTAL IMPACT AND FEDERAL AGENCIES AND FEDERAL-STATE AGENCIES WITH JURISDICTION BY LAW OR SPECIAL EXPERTISE TO COMMENT THEREON [NOTE]
ATTACHMENT 3—OFFICES WITHIN FEDERAL AGENCIES AND FEDERAL-STATE AGENCIES FOR INFORMATION REGARDING THE AGENCIES' IMPACT STATEMENTS FOR WHICH COMMENTS ARE REQUESTED [NOTE]
ATTACHMENT 4—STATE AND LOCAL AGENCY REVIEW OF IMPACT STATEMENTS

AUTHORITY: Secs. 102(2)(A), 102(2)(C), Pub. L. 91–190, 83 Stat. 853 (42 U.S.C. 4332); secs. 2(b), 4(f), Pub. L. 89–670, 80 Stat. 931 (49 U.S.C. 1651(b), 1653(f)); E.O. 11514, 35 FR 4247; 40 CFR part 1500; DOT Order 5610.1B, 39 FR 35234; delegations of authority at 49 CFR 1.45, 1.51.

SOURCE: 40 FR 52396, Nov. 10, 1975, unless otherwise noted.

Subpart A—General

§ 520.1 Purpose and scope.

(a) Section 102(2)(C) of the National Environmental Policy Act of 1969 (83 Stat. 853; 42 U.S.C. 4332(2)(C)), as implemented by Executive Order 11514 (3 CFR, 1966–1970 Comp., p. 902) and the Council on Environmental Quality's Guidelines of April 23, 1971 (36 FR 7724), requires that all agencies of the Federal Government prepare detailed environmental statements on proposals for legislation and other major Federal actions significantly affecting the quality of the human environment. The purpose of the Act is to build into the agency decision-making process careful consideration of all environmental aspects of proposed actions.

(b) This part specifies National Highway Traffic Safety Administration

(NHTSA) procedures for conducting environmental assessments and reviews, and for the preparation of environmental impact statements on proposals for legislation and other major agency actions significantly affecting the quality of the human environment.

§ 520.2 Policy.

The agency will strive to carry out the full intent and purpose of the National Environmental Policy Act of 1969 and related orders and statutes, and take positive steps to avoid any action which could adversely affect the quality of the human environment.

§ 520.3 Definitions.

(a) *Environmental assessment* is a written analysis describing the environmental impact of a proposed or ongoing agency action, submitted to the agency either by its grantees or contractors, or by any person outside the agency as part of any program or project proposal within the scope of activities listed in § 520.4(b).

(b) *Environmental review* is a formal evaluation undertaken by the agency, culminating in a brief document (the environmental review report), to determine whether a proposed or ongoing NHTSA action may have a significant impact on the environment. The review document will be included in the proposed or ongoing agency action, and either support a negative declaration or recommend the preparation of a draft environmental impact statement.

(c) *Draft environmental impact statement* (DEIS) means a preliminary statement on the environmental impact of a proposed or ongoing NHTSA action which is circulated for comment and review within and outside NHTSA.

(d) *Final environmental impact statement* (FEIS) means a detailed statement which, pursuant to section 102(2)(C) of the National Environmental Policy Act, identifies and analyzes the anticipated environmental impact of a proposed or ongoing NHTSA action.

(e) *Negative declaration* means a statement prepared subsequent to an environmental review, which states that a proposed or ongoing NHTSA action will have no significant environmental impact and therefore does not require a draft or final environmental impact statement.

§ 520.4 Applicability.

(a) *Scope*. This part applies to all elements of NHTSA, including the Regional Offices.

(b) *Actions covered*. Except as provided in paragraph (e) of this section, this part applies to the following agency actions and such actions and proposals as may be sponsored jointly with another agency:

(1) New and continuing programs and projects; budget proposals; legislative proposals by the agency; requests for appropriations; reports on legislation initiated elsewhere where the agency has primary responsibility for the subject matter involved; and any renewals or reapprovals of the foregoing;

(2) Research, development, and demonstration projects; formal approvals of work plans; and associated contracts;

(3) Rulemaking and regulatory actions, including Notices of Proposed Rulemaking (NPRM); requests for procurement (RFP); requests for grants (Annual Work Programs); and contracts;

(4) All grants, loans or other financial assistance for use in State and Community projects;

(5) Annual State Highway Safety Work Programs;

(6) Construction; leases; purchases; operation of Federal facilities; and

(7) Any other activity, project, or action likely to have a significant effect on the environment.

(c) *Continuing actions*. This part applies to any action enumerated in paragraph (b) of this section, even though such actions arise from a project or program initiated prior to enactment of the National Environmental Policy Act on January 1, 1970.

(d) *Environmental assessments*. Within the scope of activities listed in § 520.4(b), any person outside the agency submitting a program or project proposal may be requested to prepare an environmental assessment of such proposed action to be included in his submission to the agency.

(e) *Exceptions*. (1) Assistance in the form of general revenue sharing funds, distributed under the State and Local

Fiscal Assistance Act of 1972, 31 U.S.C. 1221, with no control by the NHTSA over the subsequent use of such funds;

(2) Personnel actions;

(3) Administrative procurements (e.g., general supplies) and contracts for personal services;

(4) Legislative proposals originating in another agency and relating to matters not within NHTSA's primary areas of responsibility;

(5) Project amendments (e.g., increases in costs) which have no environmental significance; and

(6) Minor agency actions that are determined by the official responsible for the actions to be of such limited scope that they clearly will not have a significant effect on the quality of the human environment.

(f) *Consolidation of statements.* Proposed actions (and alternatives thereto) having substantially similar environmental impacts may be covered by a single environmental review and environmental impact statement or negative declaration.

§ 520.5 Guidelines for identifying major actions significantly affecting the environment.

(a) *General guidelines.* The phrase, ''major Federal actions significantly affecting the quality of the human environment,'' as used in this part, shall be construed with a view to the overall, cumulative impact of the actions, other Federal projects or actions in the area, and any further contemplated or anticipated actions. Therefore, an environmental impact statement should be prepared in any of the following situations:

(1) Proposed actions which are localized in their impact but which have a potential for significantly affecting the environment;

(2) Any proposed action which is likely to be controversial on environmental grounds;

(3) Any proposed action which has unclear but potentially significant environmental consequences.

(b) *Specific guidelines.* While a precise definition of environmental significance that is valid in all contexts is not possible, any of the following actions should ordinarily be considered as significantly affecting the quality of the human environment:

(1) Any matter falling under section 4(f) of the Department of Transportation Act (49 U.S.C. 1653(f)) and section 138 of Federal-aid highway legislation (23 U.S.C. 138), requiring the use of any publicly owned land from a park, recreation area, or wildlife and waterfowl refuge of national, State, or local significance as determined by the Federal, State, or local officials having jurisdiction thereof, or any land from an historic site of national, State, or local significance;

(2) Any matter falling under section 106 of the National Historic Preservation Act of 1966 (16 U.S.C. 470(f)), requiring consideration of the effect of the proposed action on any building included in the National Register of Historic Preservation and reasonable opportunity for the Advisory Council on Historic Preservation to comment on such action;

(3) Any action that is likely to affect the preservation and enhancement of sites of historical, architectural, or archaeological significance;

(4) Any action that is likely to be highly controversial regarding relocation housing;

(5) Any action that (i) divides or disrupts an established community, disrupts orderly, planned development, or is inconsistent with plans or goals that have been adopted by the community in which the project is located; or (ii) causes significantly increased congestion;

(6) Any action that (i) involves inconsistency with any Federal, State, or local law or administrative determination relating to the environment; (ii) has a significantly detrimental impact on air or water quality or on ambient noise levels for adjoining areas; (iii) involves a possibility of contamination of a public water supply system; or (iv) affects ground water, flooding, erosion, or sedimentation;

(7) Any action that may directly or indirectly result in a significant increase in noise levels, either within a motor vehicle's closed environment or upon nearby areas;

(8) Any action that may directly or indirectly result in a significant increase in the energy or fuel necessary

to operate a motor vehicle, including but not limited to the following: (i) Actions which may directly or indirectly result in a significant increase in the weight of a motor vehicle; and (ii) actions which may directly or indirectly result in a significant adverse effect upon the aerodynamic drag of a motor vehicle;

(9) Any action that may directly or indirectly result in a significant increase in the amount of harmful emissions resulting from the operation of a motor vehicle;

(10) Any action that may directly or indirectly result in a significant increase in either the use of or the exposure to toxic or hazardous materials in the manufacture, operation, or disposal of motor vehicles or motor vehicle equipment;

(11) Any action that may directly or indirectly result in a significant increase in the problem of solid waste, as in the disposal of motor vehicles or motor vehicle equipment;

(12) Any action that may directly or indirectly result in a significant depletion of scarce natural resources associated with the manufacture or operation of motor vehicles or motor vehicle equipment; and

(13) Any other action that causes significant environment impact by directly or indirectly affecting human beings through adverse impacts on the environment.

(c) *Research activities.* (1) In accordance with DOT Order 5610.1B, the Assistant Secretary for Systems Development and Technology (TST) will prepare, with the concurrence of the NHTSA, proposed procedures for assessing the environmental consequences of research activities. Until final procedures are promulgated, the following factors are to be considered for periodic evaluation to determine when an environmental statement is required for such programs:

(i) The magnitude of Federal investment in the program;

(ii) The likelihood of widespread application of the technology;

(iii) The degree of environmental impact which would occur if the technology were widely applied; and

(iv) The extent to which continued investment in the new technology is likely to restrict future alternatives.

(2) The statement or environmental review culminating in a negative declaration must be written late enough in the development process to contain meaningful information, but early enough so that this information can practically serve as an input in the decision-making process. Where it is anticipated that an environmental impact statement may ultimately be required but its preparation is still premature, the office shall prepare a publicly available record briefly setting forth the reasons for its determination that a statement is not yet necessary. This record shall be updated at least quarterly, or as may be necessary when significant new information becomes available concerning the potential environmental impact of the program. In any case, a statement or environmental review culminating in a negative declaration must be prepared before research activities have reached a state of investment or commitment to implementation likely to determine subsequent development or restrict later alternatives. Statements on technology research and development programs shall include an analysis not only of alternative forms of the same technology that might reduce any adverse environmental impacts but also of alternative technologies that would serve the same function as the technology under consideration. Efforts shall be made to involve other Federal agencies and interested groups with relevant expertise in the preparation of such statements because the impacts and alternatives to be considered are likely to be less well defined than in other types of statements.

Subpart B—Procedures

§ 520.21 Preparation of environmental reviews, negative declarations, and notices of intent.

(a) *General responsibilities*—(1) *Associate Administrators and Chief Counsel.* Each Associate Administrator and the Chief Counsel is responsible for determining, in accordance with Subpart A, whether the projects and activities

under his jurisdiction require an environmental review, and for preparing all such reviews, negative declarations, and notices of intent.

(2) *Regional Administrators.* Each Regional Administrator, in consultation with the Governor's Representative, is responsible for determining, in accordance with Subpart A, whether proposed State activities in his Region, as stated in Annual Work Programs, require an environmental review, and for the preparing all such reviews, negative declarations, and notices of intent.

(3) *Associate Administrator for Planning and Evaluation.* The Associate Administrator for Planning and Evaluation may request in accordance with the requirements of this order, that the appropriate Associate Administrator or Regional Administrator prepare an Environmental review or Environmental Impact Statement for any proposed or continuing NHTSA action, or comment on any environmental statement prepared by other agencies.

(b) *Coordination.* Coordination with appropriate local, State and Federal agencies should be accomplished during the early stages by the responsible official to assist in identifying areas of significance and concern. Existing procedures, including those established under the Office of Management and Budget (OMB) Revised Circular A–95, should be used to the greatest extent practicable to accomplish this early coordination.

(c) *Applicants.* (1) Each applicant for a grant, loan, or other financial assistance for use in State and community projects may be requested to submit, with the original application, an environmental assessment of the proposed project.

(2) Under OMB Revised Circular A–95, ''Evaluation, Review, and Coordination of Federal Assistance Programs and Projects,'' and DOT 4600.4B, ''Evaluation, Review and Coordination of DOT Assistance Programs and Projects,'' dated February 27, 1974, a grant applicant must notify the clearinghouse of its intention to apply for Federal program assistance. The notification must solicit comments on the project and its impacts from appropriate State and local agencies. Since it is the NHTSA's policy to assure that (i) interested parties and Federal, State, and local agencies receive early notification of the decision to prepare an environmental impact statement, and (ii) their comments on the environmental effects of the proposed Federal action are solicited at an early stage in the preparation of the draft impact statement, this early notification requirement may be met by a grant applicant by sending the notification to interested parties and agencies at the same time it is sent to the clearinghouse.

(d) *Consultants.* Consultants may prepare background or preliminary material and assist in preparing a draft or final environmental statement for which the NHTSA takes responsibility. Care should be exercised in selecting consultants, and in reviewing their work, to insure complete and objective consideration of all relevant project impacts and alternatives, particularly if the consultant may expect further contracts based on the outcome of the environmental decision.

(e) *Environmental review report.* The environmental review shall culminate in a brief written report of the same title, which shall be included in the proposed or ongoing agency action, and which:

(1) Describes the proposed or ongoing NHTSA action, the environment affected, and the anticipated benefits;

(2) Evaluates the potential environmental impact, including those adverse impacts which cannot be avoided, should the proposal be implemented or the action continued;

(3) Assesses the alternatives to the proposed or ongoing action and their potential environmental impact;

(4) Evaluates the cumulative and long-term environmental effects of the proposed or ongoing action;

(5) Describes the irreversible and irretrievable commitments of resources involved in the proposal's implementation or the action's continuance;

(6) Identifies any known or potential conflicts with State, regional, or local plans and programs;

(7) Weighs and analyzes the anticipated benefits against the environmental and other costs of the proposed or ongoing action in a manner which

reflects similar comparisons of reasonably available alternatives; and

(8) Concludes with a negative declaration or recommends the preparation of a DEIS.

(f) *Negative declarations.* (1) If the responsible official judges that the environmental impact of a proposed or ongoing action under his jurisdiction will not significantly affect the quality of the human environment, the following declaration will be included in the environmental review report:

It is the judgment of this agency, based on available information, that no significant environmental impact will result from execution of this action.

(2) A DEIS may be changed to a negative declaration if the public review process indicates that the proposal or ongoing action will not have a significant effect upon the environment.

(3) An index of all negative declarations and a copy of each environmental review report shall be retained by the responsible official under whose jurisdiction it was prepared and shall be made available for public inspection upon request.

(g) *Notice of intent to prepare a draft environmental impact statement.* If the responsible official under whose jurisdiction an environmental review is prepared determines that the proposed or ongoing action could have a potentially significant effect on the quality of the environment, he shall: coordinate with the Associate Administrator for Planning and Evaluation and the Chief Counsel, transmit to appropriate Federal, State and local agencies and have published in the FEDERAL REGISTER a notice of intent to prepare an environmental statement as soon as is practicable after the determination to prepare such a statement.

§ 520.22 Maintenance of a list of actions.

(a) The Associate Administrator for Planning and Evaluation shall be responsible for the preparation and maintenance of a list of actions for which draft or final environmental impact statements have been or are to be prepared. This list shall be on file with the Associate Administrator for Planning and Evaluation and shall be available for public inspection in the Docket Section upon request. A copy of the initial list and its updatings at the end of each calendar quarter shall be transmitted by the Associate Administrator for Planning and Evaluation to TES and CEQ.

(b) If a determination is made that an environmental statement is not necessary for a proposed action (1) which has been identified as normally requiring preparation of a statement, (2) which is similar to actions for which a significant number of statements have been prepared, (3) which the agency has previously announced would be the subject of a statement, or (4) for which the official responsible for such proposal has made a negative determination in response to a request from the CEQ, a record briefly setting forth the decision and the reasons for that determination shall be prepared by the responsible official. Such a record of negative determinations and any evaluations made pursuant to § 520.21 which conclude that preparation of a statement is not yet timely shall be prepared by the responsible official, submitted to the Associate Administrator for Planning and Evaluation, and made available by the Associate Administrator for Planning and Evaluation in the same manner as provided in paragraph (a) of this section for lists of statements under preparation.

§ 520.23 Preparation of draft environmental impact statements.

(a) *Planning stage.* (1) When a DEIS is to be prepared, the responsible official shall promptly initiate its preparation and develop a schedule in consultation with the Associate Administrator for Planning and Evaluation, to assure completion prior to the first significant point of decision in the program or project development process.

(2) The environmental impacts of proposed activities should be initially assessed concurrently with the initial technical and economic studies.

(3) Section 102(2)(A) of NEPA requires each Federal agency to utilize a ''systematic, interdisciplinary approach'' to plans and programs affecting the environment. To assure that all environmental impacts are identified and assessed, all relevant disciplines should be represented. If the necessary

disciplines are not represented on the staff of the applicant or NHTSA, it is appropriate to use professional services available in other Federal, State or local agencies, universities, or consulting firms. The use of the interdisciplinary approach should not be limited to the environmental statement. This approach should also be used in the early planning stages to help assure a systematic evaluation of reasonable alternative courses of action and their potential social, economic, and environmental consequences.

(b) *Form and content requirements.* Attachment 1 of this order prescribes the form and content requirements to be followed for each draft and final environmental impact statement. The DEIS must fulfill and satisfy, to the fullest extent possible at the time it is prepared, the requirements established for final statements.

(c) *Lead agency.* CEQ guidelines provide that when more than one Federal agency (1) directly sponsors an action, or is directly involved in an action through funding, licenses, or permits, or (2) is involved in a group of actions directly related to each other because of their functional interdependence and geographical proximity, consideration should be given to preparing one statement for all the Federal actions involved. Agencies in such cases should consider the designation of a single ''lead agency'' to assume supervisory responsibility for preparation of a joint statement. Where a lead agency prepares the statement, the other agencies involved should provide assistance with respect to their areas of jurisdiction and expertise. The statement should contain an evaluation of the full range of Federal actions involved, should reflect the views of all participating agencies, and should be prepared before major or irreversible actions have been taken by any of the participating agencies. Some relevant factors in determining an appropriate lead agency are: The time sequence in which the agencies become involved, the magnitude of their respective involvement, and their relative expertise with respect to the project's environmental effects. Questions concerning ''lead agency'' decisions should be raised with CEQ through TES. For projects serving and primarily involving land owned by or under the jurisdiction of another Federal agency, that agency may be the appropriate lead agency.

(d) *Applicants.* Where the agency requests an applicant for financial assistance or other agency approval to submit an environmental assessment, the responsible official will (1) assist the applicant by outlining the information required, and (2) in all cases make his own evaluation of the environmental issues involved and take responsibility for the scope and content of draft and final environmental statements.

§ 520.24 Internal processing of draft environmental impact statements.

Before circulating a DEIS for external review, the official responsible for the DEIS shall receive the concurrence of the Associate Administrator for Planning and Evaluation and the Chief Counsel; and prepare a memorandum for approval by the Administrator which shall:

(a) Set forth the basis on which it was determined that a potentially significant environmental effect exists;

(b) Attach the DEIS;

(c) Identify the Federal, State, and local agencies and private sources from which comments on the DEIS are proposed to be solicited (see Attachment 2);[1] and

(d) Include a recommendation on whether a public hearing on the proposed action should be held.

§ 520.25 External review of draft environmental impact statements.

(a) *Requirements.* The official responsible for the DEIS shall:

(1) Transmit 5 copies of the DEIS to the CEQ and 2 copies to TES;

(2) Solicit comments from all Federal, State, and local agencies which have jurisdiction by law or special expertise with respect to the possible environmental impact involved, and from the public (see Attachment 2); and

(3) Inform the public and interested parties of the availability of the DEIS and provide copies as appropriate; and

(4) Allow a comment period of not less than 45 days from the Friday of

[1] Filed as part of the original document.

the week following receipt of the draft impact statement by CEQ. Requests for extensions shall be granted whenever possible, and particularly when warranted by the magnitude and complexity of the statement or the extent of citizen interest.

(b) *Procedures*—(1) *Federal and Federal-State agency review.* (i) The DEIS shall be circulated for review to the Federal and Federal-State agencies with special expertise or jurisdiction by law with regard to the potential environmental impact involved. These agencies and their relevant areas of expertise are identified in Attachment 2.

(ii) For actions within the jurisdiction of the Environmental Protection Agency (air or water quality, solid wastes, pesticides, radiation standards, noise), the DEIS shall be sent to EPA.

(iii) For actions which would affect any property that is included in the National Register of Historic Preservation, the DEIS should be sent to the Advisory Council on Historic Preservation and the State Liaison Office for Historic Preservation.

(2) *State and local review.* Where a review of the proposed action by State and local agencies authorized to develop and enforce environmental standards is relevant, comments are to be solicited directly from such agencies with known responsibilities in environmental matters, and shall be obtained as follows:

(i) Where review of direct Federal development projects, and of projects assisted under programs listed in Attachment D to revised OMB Circular A–95 (as implemented by DOT 4600.4B ''Evaluation, Review and Coordination of DOT Assistance Programs and Projects'', dated February 27, 1974), takes place prior to preparation of an environmental statement, comments of the reviewing agencies on the environmental effects of the proposed project are inputs to the environmental statement. These comments shall be attached to the draft statement when it is circulated for review and copies of the draft shall be sent to those who commented. A–05 clearinghouses or other agencies designated by the Governor may also secure comments on environmental statements. In all cases, copies of the draft environmental statements shall be sent to clearinghouses and to the applicant whose project is the subject of the statement.

(ii) Comments shall be directly obtained from appropriate State and local agencies, except where review is secured by agreement through A–95 clearinghouses, unless the Governor of the appropriate State has designated some other point for obtaining his review. Instructions for obtaining the views of such agencies are contained in the joint OMB–CEQ memorandum (see Attachment 4). Comments shall be solicited from municipalities and counties on all projects located therein.

(iii) State and local review of NHTSA procedures, regulations, and policies for administering Federal programs of assistance to State and local governments shall be obtained pursuant to procedures established by OMB Circular No. A–85.

(iv) Generally, environmental statements on legislative and budget proposals may be excluded from State and local review.

(3) *General public review.* (i) At the time the DEIS is circulated to Federal, State, and local agencies, public availability of the DEIS for comment and review will be announced by the CEQ in the FEDERAL REGISTER. Copies of the DEIS should be sent to known interested parties, and press releases should be sent to local news media advising where the DEIS is available and how copies may be obtained. The Office of Public Affairs and Consumer Services shall maintain a list of groups, including conservation organizations and motor vehicle manufacturers, known to be interested in the agency's activities, and directly notify such groups of the availability of the DEIS or send them a copy as soon as it has been prepared.

(ii) A DEIS should be available to the public at least 30 days prior to the time of a public hearing on the DEIS.

(iii) Copies of the DEIS will be made available at the NHTSA Docket Section, Room 5109, 400 Seventh Street, SW., Washington, DC 20590, and, where appropriate, NHTSA Regional Offices, at the offices of any applicants or grantees, at appropriate State, regional, and metropolitan clearing houses, and local public libraries, and

furnished to public and private organizations and individuals with special expertise with respect to the potential environmental impact involved, and to those with an interest in the action who request an opportunity to comment. Copies to be made available to the public shall be provided without charge to the extent practicable, or at a fee which is not more than the actual cost of reproducing copies required to be sent to other Federal agencies, including the CEQ.

(iv) A copy of the DEIS should in all cases be sent to any applicant whose project is the subject of the statement.

(v) If a DEIS is changed to a negative declaration as a result of the public review process, all agencies and individuals that received copies and/or commented on the DEIS must be informed that a negative declaration was substituted for the DEIS and given a brief explanation of the reason for such substitution.

(c) *Utilization of comments.* Comments received on the draft statement, and inputs (in summary form, if appropriate) from the processes for citizen participation, shall accompany the environmental statement through the normal internal project or program review process.

§ 520.26 Public hearings.

(a) A public hearing on a proposed or ongoing action covered by a DEIS shall be held upon the determination by the official responsible for such action, in consultation with the Associate Administrator for Planning and Evaluation, that a public hearing would be appropriate and in the public interest. In deciding whether a public hearing is appropriate, the responsible official should consider:

(1) The magnitude of the proposal in terms of economic costs, the geographic area involved, and the uniqueness or size of the commitment of the resources involved;

(2) The degree of interest in the proposal, as evidenced by requests from the public and from Federal, State, and local authorities that a hearing be held;

(3) The likelihood that information will be presented at the hearing which will be of assistance to the agency in fulfilling its responsibilities under the NEPA;

(4) The extent to which public involvement already has been achieved through other means, such as earlier public hearings, meetings with citizen representatives, and/or written comments on the proposed action; and

(5) The extent of potential environmental impact.

(b) If it is determined that a public hearing is to be held in accordance with paragraph (a) of this section, the official responsible for the action shall both announce the hearing through newspaper articles, direct notification to interested parties, and clearinghouses, and cause a notice to be issued in the FEDERAL REGISTER at least 30 days prior to the time of such hearing:

(1) Identifying the subject matter of the hearing;

(2) Announcing the date, time, and place of the hearing and the procedures to be followed; and

(3) Announcing the availability of the DEIS and any other information, as appropriate, for public inspection at one or more locations in the area affected by the action.

§ 520.27 Legislative actions.

(a) A DEIS on both legislative proposals and reports for which NHTSA either develops the Departmental position or originates the legislation will be cleared with TES, filed with CEQ, and submitted to the Office of Management and Budget through the normal DOT and NHTSA legislative process.

(b) The preparation, circulation, and filing of the environmental statement shall be in accordance with OMB Bulletin 72–6, ''Proposed Federal Actions Affecting the Environment.''

(c) A DEIS and any comments that have been received should be available to the Congress and to the public for consideration in connection with the proposed legislation or report on proposed legislation. In cases where the scheduling of Congressional hearings on recommendations or reports on proposals for legislation which the Department has forwarded to the Congress does not allow adequate time for the completion of a FEIS, a DEIS may be furnished to the Congress and made

available to the public pending transmittal of the comments as received and the final text.

§ 520.28 Preparation of final environmental impact statements.

(a) If the action is to go forward and the DEIS has not been changed to a negative declaration, as soon as practicable after the expiration of the comment period and hearing process, if any, the official responsible for the action shall prepare a final environmental impact statement (FEIS), taking into account all comments received and issues raised during such period and process.

(b) The FEIS shall conform to the guidelines for form and content in Attachment 1.

(c) The FEIS shall then be submitted to the Chief Counsel by the official responsible for the action, for determination of legal sufficiency.

§ 520.29 Internal review of final environmental impact statements.

(a) Upon completion of the review for legal sufficiency of the FEIS, the Chief Counsel shall transmit 2 copies of the FEIS to TES for concurrence. Unless other notification is provided within 2 weeks after receipt in TES, the statement will be considered concurred in by TES.

(b) After concurrence by TES, the FEIS will be transmitted by the Chief Counsel to the Administrator for approval.

(c) If an action requires the personal approval of the Secretary or Deputy Secretary pursuant to a request by them or by TES, TGC, or the NHTSA office originating the action, the final environmental statement shall be accompanied by a brief cover memorandum requesting the Secretary's or Deputy Secretary's approval of the action.

(1) The memorandum shall have signature lines for the concurrence of the Assistant Secretary for Environment, Safety, and Consumer Affairs, the General Counsel, and the Deputy Secretary, and for the approval of the Secretary or Deputy Secretary.

(2) TES, in conjunction with the Executive Secretary, is responsible for informing the Assistant Secretary for Congressional and Intergovernmental Affairs and the Office of Public Affairs of the Secretary's decisions so that they, in coordination with the operating administrations or other Secretarial Offices involved, may take the appropriate actions.

§ 520.30 Availability of final environmental impact statements.

(a) Pending final approval and filing with CEQ, a proposed FEIS may be made available to the public and Federal, State, or local agencies if it carries a notation that it is not approved and filed.

(b) After approval by the Administrator, the Associate Administrator for Planning and Evaluation will send 5 copies of the FEIS (together with comments) to the CEQ; individual copies with comments attached to the EPA and all Federal, State, and local agencies and members of the public who submitted comments on the DEIS or requested copies of the FEIS. If the length of the statement or the number of comments make this distribution requirement highly impractical, TES should be consulted to consider an alternative arrangement.

(c) Copies of the FEIS will be made available in the NHTSA Docket Section, Room 5109, 400 Seventh Street SW., Washington, DC 20590, and, where appropriate, NHTSA Regional Offices, at the offices of any applicants or grantees, and at appropriate State, regional, and metropolitan clearinghouses and, where the impact is localized, public libraries.

(d) The official responsible for the action shall, upon request, make available copies of the FEIS and substantive comments received on the DEIS without charge to the extent practicable, or at a fee which is not more than the actual cost of reproducing copies.

(Authority: Secs. 102(a)(A), 102(2)(C), Pub. L. 91–190, 83 Stat. 853 (42 U.S.C. 4332); secs. 2(b), 4(f), Pub. L. 89–670, 80 Stat. 931 (49 U.S.C. 1651(b), 1653(f); E. O. 11514, 35 FR 4247; 40 CFR Part 1500; DOT Order 5610.1B, 39 FR 35234; delegations of authority at 49 CFR 1.45, 1.50 and 501.7)

[40 FR 52396, Nov. 10, 1975, as amended at 48 FR 44081, Sept. 27, 1983]

§ 520.31 Amendments or supplements.

A draft or final environmental impact statement may be amended or supplemented. Supplements or amendments should be considered when substantial changes are made in the proposed or ongoing action that will introduce a new or changed environmental effect of significance to the quality of the environment, or significant new information becomes available concerning its environmental aspects. In such cases, the supplement or amendment shall be processed in consultation with TES with respect to the need for, or desirability of, recirculating the statement for the appropriate period. TES concurrence must be secured before issuance.

§ 520.32 Emergency action procedures.

The CEQ Guidelines allow modification of requirements in case of a national emergency, a disaster or similar great urgency. The processing times may be reduced, or if the emergency situation warrants, preparation and processing of a DEIS, FEIS, or negative declaration may be abbreviated. Such procedural changes, however, should be requested only for those projects where the need for immediate action requires processing in other than the normal manner.

§ 520.33 Timing of proposed NHTSA actions.

To the maximum extent practicable, no administrative action (i.e., any proposed action to be taken by the agency other than agency proposals for legislation to Congress, budget proposals, or agency reports on legislation) subject to this part and covered by an environmental impact statement shall be taken sooner than 90 days after a DEIS has been circulated for comment, furnished to the CEQ, and made public. Neither shall such administrative action be taken sooner than 30 days after the FEIS (together with comments) has been filed with CEQ, and made available to commenting agencies and the public. If the FEIS is filed within 90 days after a DEIS has been circulated for comment, furnished to the CEQ and made public, the 30-day period and 90-day period may run concurrently to the extent that they overlap. The 90-day time period is measured from the date of publication in the FEDERAL REGISTER of the list of weekly filings of environmental impact statements with the CEQ, but the 30-day period is computed from the date of receipt by the CEQ.

§ 520.34 Comments on environmental statements prepared by other agencies.

(a) All requests for NHTSA's views on a DEIS or a proposed action undergoing environmental review by another agency will be transmitted to the Associate Administrator for Planning and Evaluation for action or referral to TES where appropriate. Offices within NHTSA may be requested by the Associate Administrator for Planning and Evaluation to supply any pertinent information and comments for a coordinated agency response.

(b) NHTSA's comments and the comments of any offices responding to a request by the Associate Administrator for Planning and Evaluation should be organized in a manner consistent with the structure of an environmental review set out in § 520.21(e). NHTSA programs that are environmentally related to the proposed action under review should be identified so interrelationships may receive due consideration.

(c) Copies of NHTSA's comments on environmental statements prepared by other agencies shall be distributed as follows:

(1) The original and 1 copy to the requesting agency;

(2) 1 copy to TES–70; and

(3) 5 copies to CEQ.

(d) Requests by the public for copies should be referred to the agency originating the statement.

ATTACHMENT 1—FORM AND CONTENT OF STATEMENT

1. Form. a. Each statement will be headed as follows:

DEPARTMENT OF TRANSPORTATION NATIONAL HIGHWAY TRAFFIC SAFETY ADMINISTRATION

(Draft) Environmental Impact Statement Pursuant to section 102(2)(C), Pub. L. 91–190; 83 Stat. 853; 42 U.S.C. 4332(2)(C).

b. The heading specified above shall be modified to indicate that the statement also covers sections 4(f) of the DOT Act or 106 of

the National Historic Preservation Act, when appropriate.

c. Each statement will, as a minimum, contain sections corresponding to paragraph 3 herein, supplemented as necessary to cover other matters provided in this Attachment.

d. The format for the summary to accompany draft and final environmental statements is as follows:

SUMMARY

(Check one) ( ) Draft ( ) Final; Department of Transportation, National Highway Traffic Safety Administration. Name, address, and telephone number of individual who can be contacted for additional information about the proposed action or the statement. (Note: DOT Order 2100.2 prescribes procedures for reporting public contacts in rulemaking.)

(1) Name of Action. (Check one) ( ) Administrative Action. ( ) Legislative Action.

(2) Brief description of action indicating what States (and counties) are particularly affected.

(3) Summary of environmental impact and adverse environmental effects.

(4) List alternatives considered.

(5)(a) (For draft statements) List all Federal, State, and local agencies from which comments have been requested.

(b) (For final statements) List all Federal, State, and local agencies and other sources from which written comments have been received.

(6) Dates the draft statement and the final statement if issued were made available to the Council on Environmental Quality and the public.

2. Guidance as to content of statement. The following paragraphs of this Attachment are intended to be considered, where relevant, as guidance regarding the content of environmental statements. This guidance is expected to be supplemented by research reports, guidance on methodology, and other material from the literature as may be pertinent to evaluation of relevant environmental factors.

3. General content. The following points are to be covered:

a. A description of the proposed Federal action (e.g., ''The proposed Federal action is approval of a grant application to construct * * *''), a statement of its purpose, and a description of the environment affected, including information, summary technical data, and maps and diagrams where relevant, adequate to permit an assessment of potential environmental impact by commenting offices and the public.

(1) Highly technical and specialized analyses and data should generally be avoided in the body of the draft impact statement. Such materials should be appropriately summarized in the body of the environmental statement and attached as appendices or footnoted with adequate bibliographic references.

(2) The statement should succinctly describe the environment of the area affected as it exists prior to a proposed action, including other related Federal activities in the area, their interrelationships, and cumulative environmental impact. The amount of detail provided in such descriptions should be commensurate with the extent and expected impact of the action, and with the amount of information required at the particular level of decision making (planning, feasibility, design, etc.). In order to insure accurate descriptions and environmental considerations, site visits should be made where appropriate.

(3) The statement should identify, as appropriate, population and growth characteristics of the affected area and any population and growth assumptions used to justify the project or program or to determine secondary population and growth impacts resulting from the proposed action and its alternatives (see paragraph 3c(2)). In discussing these population aspects, the statement should give consideration to using the rates of growth in the region of the project contained in the projection compiled for the Water Resources Council by the Bureau of Economic Analysis of the Department of Commerce and the Economic Research Service of the Department of Agriculture (the OBERS projection).

(4) The sources of data used to identify, quantify, or evaluate any or all environmental consequences must be expressly noted.

b. The relationship of the proposed action and how it may conform to or conflict with adopted or proposed land use plans, policies, controls, and goals and objectives as have been promulgated by affected communities. Where a conflict or inconsistency exists, the statement should describe the extent of reconciliation and the reasons for proceeding notwithstanding the absence of full reconciliation.

c. The probable impact of the proposed action on the environment. (1) This requires assessment of the positive and negative effects of the proposed action is it affects both national and international human environment. The attention given to different environmental factors will vary according to the nature, scale, and location of proposed actions. Among factors to be considered should be the potential effect of the action on such aspects of the environment as those listed in Attachment 2, and in section 520.5(b), supra. Primary attention should be given in the statement to discussing those factors most evidently impacted by the proposed action.

(2) Secondary and other foreseeable effects, as well as primary consequences for the environment, should be included in the analyses. Secondary effects, such as the impact on fuel

consumption, emissions, or noise levels of automobiles or in the use of toxic or scarce materials, may be more substantial than the primary effects of the original action.

d. Alternatives to the proposed action, including, where relevant, those not within the existing authority of the responsible preparing office. Section 102(2)(D) of NEPA requires the responsible agency to ''study, develop, and describe appropriate alternatives to recommended courses of action in any proposal which involves unresolved conflicts concerning alternative uses of available resources.'' A rigorous exploration and an objective evaluation of the environmental impacts of all reasonable alternative actions, particularly those that might enhance environmental quality or avoid some or all of the adverse environmental effects, are essential. Sufficient analysis of such alternatives and their environmental benefits, costs, and risks should accompany the proposed action through the review process in order not to foreclose prematurely options which might enhance environmental quality or have less detrimental effects. Examples of such alternatives include: The alternatives of not taking any action or of postponing action pending further study; alternatives requiring actions of a significantly different nature which would provide similar benefits with different environmental impacts, e.g., low capital intensive improvements, mass transit alternatives to highway construction; alternatives related to different locations or designs or details of the proposed action which would present different environmental impacts. In each case, the analysis should be sufficiently detailed to reveal comparative evaluation of the environmental benefits, costs, and risks of the proposed action and each reasonable alternative. Where an existing impact statement already contains such an analysis its treatment of alternatives may be incorporated, provided such treatment is current and relevant to the precise purpose of the proposed action.

e. Any probable adverse environmental effacts which cannot be avoided (such as water or air pollution, noise, undesirable land use patterns, or impacts on public parks and recreation areas, wildlife and waterfowl refuges, or on historic sites, damage to life systems, traffic congestion, threats to health, or other consequences adverse to the environmental goals set out in section 101(b) of NEPA). This should be a brief section summarizing in one place those effects discussed in paragraph 3c that are adverse and unavoidable under the proposed action. Included for purposes of contrast should be a clear statement of how all adverse effects will be mitigated. Where mitigating steps are included in the statement, the responsible official shall see that they are carried out.

f. The relationship between local short-term uses of man's environment and the maintenance and enhancement of long-term productivity. This section should contain a brief discussion of the extent to which the proposed action involves tradeoffs between short-term environmental gains at the expense of long-term losses, or vice versa, and a discussion of the extent to which the proposed action forecloses future options.

g. Any irreversible and irretrievable commitments of resources that would be involved in the proposed action should it be implemented. This requires identification of unavoidable impacts and the extent to which the action irreversibly curtails the range of potential uses of the environment. ''Resources'' means not only the labor and materials devoted to an action but also the natural and cultural resources lost or destroyed.

h. An indication of what other interests and considerations of Federal policy are thought to offset the adverse environmental effects of the proposed action identified pursuant to subparagraphs (c) and (e) of this paragraph. The statement should also indicate the extent to which these stated countervailing benefits could be realized by following reasonable alternatives to the proposed action (as identified in subparagraph (d) of this paragraph) that would avoid some or all of the adverse environmental effects. In this connection if a cost-benefit analysis of the proposed action has been prepared, it, or a summary, should be attached to the environmental impact statement, and should clearly indicate the extent to which environmental costs have not been reflected in such analysis.

i. A discussion of problems and objections raised by other Federal agencies, State and local entities, and citizens in the review process, and the disposition of the issues involved and the reasons therefor. (This section shall be added to the final environmental statement at the end of the review process.)

(1) The draft and final statements should document issues raised through consultations with Federal, State, and local agencies with jurisdiction or special expertise and with citizens, of actions taken in response to comments, public hearings, and other citizens involvement proceedings.

(2) Any unresolved environmental issues and efforts to resolve them, through further consultations or otherwise, should be identified in the final statement. For instance, where an agency comments that the statement has inadequate analysis or that the agency has reservations concerning the impacts, or believes that the impacts are too adverse for approval, either the issue should be resolved or the final statement should reflect efforts to resolve the issue and set forth any action that will result.

(3) The statement should reflect that every effort was made to discover and discuss all major points of view on the environmental effects of the proposed action and alternatives in the draft statement. However, where opposing professional views and responsible opinion have been overlooked in the draft statement and are raised through the commenting process, the environmental effects of the action should be reviewed in light of those views. A meaningful reference should be made in the final statement to the existence of any responsible opposing view not adequately discussed in the draft statement indicating responses to the issues raised.

(4) All substantive comments received on the draft (or summaries of responses from the public which have been exceptionally voluminous) should be attached to the final statement, whether or not each such comment is thought to merit individual discussion in the text of the statement.

j. Draft statement should indicate at appropriate points in the text any underlying studies, reports, and other information obtained and considered in preparing the statement, including any cost-benefit analyses prepared. In the case of documents not likely to be easily accessible (such as internal studies or reports), the statement should indicate how such information may be obtained. If such information is attached to the statement, care should be taken to insure that the statement remains an essentially self-contained instrument, capable of being understood by the reader without the need for undue cross reference.

4. Publicly owned parklands, recreational areas, wildlife and waterfowl refuges and historic sites. The following points are to be covered:

a. Description of ''any publicly owned land from a public park, recreational area or wildlife and waterfowl refuge'' or ''any land from an historic site'' affected or taken by the project. This includes its size, available activities, use, patronage, unique or irreplaceable qualities, relationship to other similarly used lands in the vicinity of the project, maps, plans, slides, photographs, and drawings showing a sufficient scale and detail the project. This also includes its impact on park, recreation, wildlife, or historic areas, and changes in vehicular or pedestrian access.

b. Statement of the ''national, State or local significance'' of the entire park, recreational area, refuge, or historic site ''as determined by the Federal, State or local officials having jurisdiction thereof.''

(1) In the absence of such a statement lands will be presumed to be significant. Any statement of ''insignificance'' by the official having jurisdiction is subject to review by the Department as to whether such statement is capricious.

(2) Where Federal lands are administered for multiple uses, the Federal official having jurisdiction over the lands shall determine whether the subject lands are in fact being used for park, recreation, wildlife, waterfowl, or historic purposes.

c. Similar data, as appropriate, for alternative designs and locations, including detailed cost estimates (with figures showing percentage differences in total project costs) and technical feasibility, and appropriate analysis of the alternatives, including any unique problems present and evidence that the cost or community disruptions resulting from alternative routes reach extraordinary magnitudes. This portion of the statement should demonstrate compliance with the Supreme Court's statement in the Overton Park case, as follows:

[The] very existence of the statute indicates that protection of parkland was to be given paramount importance. The few green havens that are public parks were not to be lost unless there were truly unusual factors present in a particular case or the cost or community disruption resulting from alternative routes reached extraordinary magnitudes. If the statutes are to have any meaning, the Secretary cannot approve the destruction of parkland unless he finds that alternative routes present unique problems. 401 U.S. 402, 412 (1971).

d. If there is no feasible and prudent alternative, description of all planning undertaken to minimize harm to the protected area and statement of actions taken or to be taken to implement this planning, including measures to maintain or enhance the natural beauty of the lands traversed.

(1) Measures to minimize harm may include replacement of land and facilities, providing land or facilities, provision for functional replacement of the facility (see 49 CFR 25.267).

(2) Design measures to minimize harm; e.g., tunneling, cut and cover, cut and fill, treatment of embankments, planting, screening, maintenance of pedestrian or bicycle paths and noise mitigation measures all reflecting utilization of appropriate interdisciplinary design personnel.

e. Evidence of concurrence or description of efforts to obtain concurrence of Federal, State or local officials having jurisdiction over the section 4(f) property regarding the action proposed and the measures planned to minimize harm.

f. If Federally-owned properties are involved in highway projects, the final statement shall include the action taken or an indication of the expected action after filing a map of the proposed use of the land or other appropriate documentation with the Secretary of the Department supervising the land (23 U.S.C. 317).

g. If land acquired with Federal grant money (Department of Housing and Urban

Development open space or Bureau of Outdoor Recreation land and water conservation funds) is involved, the final statement shall include appropriate communications with the grantor agency.

h. TGC will determine application of section 4(f) to public interests in lands, such as easements, reversions, etc.

i. A specific finding by the Administrator that there is no feasible and prudent alternative and that the proposal includes all possible planning to minimize harm to the ''4(f) area'' involved.

5. Properties and sites of historic and cultural significance. The statement should document actions taken to preserve and enhance districts, sites, buildings, structures, and objects of historical, architectural, archeological, or cultural significance affected by the action.

a. Draft environmental statements should include identification, through consulting the National Register and applying the National Register Criteria (36 CFR part 800), of properties that are included in or eligible for inclusion in the National Register of Historic Places that may be affected by the project. The National Register is published in its entirety each February in the FEDERAL REGISTER. Monthly additions and listings of eligible properties are published in the FEDERAL REGISTER the first Tuesday of each month. The Secretary of the Interior will advise, upon request, whether properties are eligible for the National Register.

b. If application of the Advisory Council on Historic Preservation's (ACHP) Criteria of Effect (36 CFR part 800) indicates that the project will have an effect upon a property included in or eligible for inclusion in the National Register of Historic Places, the draft environmental statement should document the effect. Evaluation of the effect should be made in consultation with the State Historic Preservation Officer (SHPO) and in accordance with the ACHP's criteria of Adverse Effect (36 CFR part 800).

c. Determinations of no adverse effect should be documented in the draft statement with evidence of the application of the ACHP's Criteria of Adverse Effect, the views of the appropriate State Historic Preservation Officer, and submission of the determination to the ACHP for review.

d. If the project will have an adverse effect upon a property included in or eligible for inclusion in the National Register of Historic Places, the final environmental statement should include either an executed Memorandum of Agreement or comments from the Council after consideration of the project at a meeting of the ACHP and an account of actions to be taken in response to the comments of the ACHP. Procedures for obtaining a Memorandum of Agreement and the comments of the Council are found in 36 CFR part 800.

e. To determine whether the project will have an effect on properties of State or local historical, architectural, archaeological, or cultural significance not included in or eligible for inclusion in the National Register, the responsible official should consult with the State Historic Preservation Officer, with the local official having jurisdiction of the property, and where appropriate, with historical societies, museums, or academic institutions having expertise with regard to the property. Use of land from historic properties of Federal, State and local significance as determined by the official having jurisdiction thereof involves section 4(f) of the DOT Act and documentation should include information necessary to consider a 4(f) determination (see paragraph 4).

6. Impacts of the proposed action on the human environment involving community disruption and relocation. a. The statement should include a description of probable impact sufficient to enable an understanding of the extent of the environmental and social impact of the project alternatives and to consider whether relocation problems can be properly handled. This would include the following information obtainable by visual inspection of the proposed affected area and from secondary sources and community sources when available.

(1) An estimate of the households to be displaced including the family characteristics (e.g., minorities, and income levels, tenure, the elderly, large families).

(2) Impact on the human environment of an action which divides or disrupts an established community, including where pertinent, the effect of displacement on types of families and individuals affected, effect of streets cut off, separation of residences from community facilities, separation of residential areas.

(3) Impact on the neighborhood and housing to which relocation is likely to take place (e.g., lack of sufficient housing for large families, doublings up).

(4) An estimate of the businesses to be displaced, and the general effect of business dislocation on the economy of the community.

(5) A discussion of relocation housing in the area and the ability to provide adequate relocation housing for the types of families to be displaced. If the resources are insufficient to meet the estimated displacement needs, a description of the actions proposed to remedy this situation including, if necessary, use of housing of last resort.

(6) Results of consultation with local officials and community groups regarding the impacts to the community affected. Relocation agencies and staff and other social agencies can help to describe probable social impacts of this proposed action.

(7) Where necessary, special relocation advisory services to be provided the elderly,

handicapped and illiterate regarding interpretations of benefits, assistance in selecting replacement housing and consultation with respect to acquiring, leasing, and occupying replacement housing.

b. This data should provide the preliminary basis for assurance of the availability of relocation housing as required by DOT 5620.1, Replacement Housing Policy, dated June 24, 1970, and 49 CFR 25.53.

7. Considerations relating to pedestrians and bicyclists. Where appropriate, the statement should discuss impacts on and consideration to be given in the development of the project to pedestrian and bicycle access, movement and safety within the affected area, particularly in medium and high density commercial and residential areas.

8. Other social impacts. The general social groups specially benefitted or harmed by the proposed action should be identified in the statement including the following:

a. Particular effects of a proposal on the elderly, handicapped, non-drivers, transit dependent, or minorities should be described to the extent reasonably predictable.

b. How the proposal will facilitate or inhibit their access to jobs, educational facilities, religious institutions, health and welfare services, recreational facilities, social and cultural facilities, pedestrian movement facilities, and public transit services.

9. Standards as to noise, air, and water pollution. The statement shall reflect sufficient analysis of the effects of the proposed action on attainment and maintenance of any environmental standards established by law or administrative determination (e.g., noise, ambient air quality, water quality) including the following documentation:

a. With respect to water quality, there should be consultation with the agency responsible for the State water pollution control program as to conformity with standards and regulations regarding storm sewer discharge sedimentation control, and other non-point source discharges.

b. The comments or determinations of the offices charged with administration of the State's implementation plan for air quality as to the consistency of the project with State plans for the implementation of ambient air quality standards.

c. Conformity to adopted noise standards, compatible, if appropriate, with different land uses.

10. Energy supply and natural resources development. Where applicable, the statement should reflect consideration of whether the project or program will have any effect on either the production or consumption of energy and other natural resources, and discuss such effects if they are significant.

11. Flood hazard evaluation. When an alternative under consideration encroaches on a flood plain, the statement should include evidence that studies have been made and evidence of consultations with agencies with expertise have been carried out. Necessary measures to handle flood hazard problems should be described. In compliance with Executive Order 11296, and Flood Hazard Guidelines for Federal Executive Agencies, promulgated by the Water Resources Council, or how such requirements can be met during project development.

12. Considerations relating to wetlands or coastal zones. Where wetlands or coastal zones are involved, the statement should include:

a. Information on location, types, and extent of wetlands areas which might be affected by the proposed action.

b. An assessment of the impacts resulting from both construction and operation of the project on the wetlands and associated wildlife, and measures to minimize adverse impacts.

c. A statement by the local representative of the Department of the Interior, and any other responsible officials with special expertise, setting forth his views on the impacts of the project on the wetlands, the worth of the particular wetlands areas involved to the community and to the Nation, and recommendations as to whether the proposed action should proceed, and, if applicable, along what alternative route.

d. Where applicable, a discussion of how the proposed project relates to the State coastal zone management program for the particular State in which the project is to take place.

13. Construction impacts. In general, adverse impacts during construction will be of less importance than long-term impacts of a proposal. Nonetheless, statements should appropriately address such matters as the following identifying any special problem areas:

a. Noise impacts from construction and any specifications setting maximum noise levels.

b. Disposal of spoil and effect on borrow areas and disposal sites (include specifications where special problems are involved).

c. Measures to minimize effects on traffic and pedestrians.

14. Land use and urban growth. The statement should include, to the extent relevant and predictable:

a. The effect of the project on land use, development patterns, and urban growth.

b. Where significant land use and development impacts are anticipated, identify public facilities needed to serve the new development and any problems or issues which would arise in connection with these facilities, and the comments of agencies that would provide these facilities.

ATTACHMENT 2—AREAS OF ENVIRONMENTAL IMPACT AND FEDERAL AGENCIES AND FEDERAL-STATE AGENCIES WITH JURISDICTION BY LAW OR SPECIAL EXPERTISE TO COMMENT THEREON

EDITORIAL NOTE: Filed as part of the original document. For text see 39 FR 32546, Sept. 30, 1975.

ATTACHMENT 3—OFFICES WITHIN FEDERAL AGENCIES AND FEDERAL-STATE AGENCIES FOR INFORMATION REGARDING THE AGENCIES' IMPACT STATEMENTS FOR WHICH COMMENTS ARE REQUESTED

EDITORIAL NOTE: Filed as part of the original document. For text see 39 FR 35248, Sept. 30, 1975.

ATTACHMENT 4—STATE AND LOCAL AGENCY REVIEW OF IMPACT STATEMENTS

1. OBM Revised Circular No. A–95 through its system of clearinghouses provides a means for securing the views of State and local environmental agencies, which can assist in the preparation of impact statements. Under A–95, review of the proposed project in the case of federally assisted projects (Part I of A–95) generally takes place prior to the preparation of the impact statement. Therefore, comments on the environmental effects of the proposed project that are secured during this stage of the A–95 process represent inputs to the environmental impact statement.

2. In the case of direct Federal development (Part II of A–95), Federal agencies are required to consult with clearinghouses at the earliest practicable time in the planning of the project or activity. Where such consultation occurs prior to completion of the draft impact statement, comments relating to the environmental effects of the proposed action would also represent inputs to the environmental impact statement.

3. In either case, whatever comments are made on environmental effects of proposed Federal or federally assisted projects by clearinghouses, or by State and local environmental agencies through clearinghouses, in the course of the A–95 review should be attached to the draft impact statement when it is circulated for review. Copies of the statement should be sent to the agencies making such comments. Whether those agencies then elect to comment again on the basis of the draft impact statement is a matter to be left to the discretion of the commenting agency depending on its resources, the significance of the project and the extent to which its earlier comments were considered in preparing the draft statement.

4. The clearinghouses may also be used, by mutual agreement, for securing reviews of the draft environmental impact statement. However, the Federal agency may wish to deal directly with appropriate State or local agencies in the review of impact statements because the clearinghouses may be unwilling or unable to handle this phase of the process. In some cases, the Governor may have designated a specific agency, other than the clearinghouse, for securing reviews of impact statements. In any case, the clearinghouses should be sent copies of the impact statement.

5. To aid clearinghouses in coordinating State and local comments, draft statements should include copies of State and local agency comments made earlier under the A–95 process and should indicate on the summary sheet those other agencies from which comments have been requested, as specified in Attachment 1.

PART 523—VEHICLE CLASSIFICATION

Sec.
523.1 Scope.
523.2 Definitions.
523.3 Automobile.
523.4 Passenger automobile.
523.5 Light truck.

AUTHORITY: 15 U.S.C. 2002; 49 CFR 1.50.

§ 523.1 Scope.

This part establishes categories of vehicles that are subject to title V of the Motor Vehicle Information and Cost Savings Act, 15 U.S.C. 2001 *et seq.*

(Sec. 301, Pub. L. 94–163, 80 Stat. 901 (15 U.S.C. 2001))

[42 FR 38362, July 28, 1977]

§ 523.2 Definitions.

Approach angle means the smallest angle, in a plane side view of an automobile, formed by the level surface on which the automobile is standing and a line tangent to the front tire static loaded radius arc and touching the underside of the automobile forward of the front tire.

Axle clearance means the vertical distance from the level surface on which an automobile is standing to the lowest point on the axle differential of the automobile.

Basic vehicle frontal area is used as defined in 40 CFR 86.079–2.

Breakover angle means the supplement of the largest angle, in the plan side view of an automobile, that can be formed by two lines tangent to the front and rear static loaded radii arcs and intersecting at a point on the underside of the automobile.

Cargo-carrying volume means the luggage capacity or cargo volume index, as appropriate, and as those terms are defined in 40 CFR 600.315, in the case of automobiles to which either of those terms apply. With respect to automobiles to which neither of those terms apply ''cargo-carrying volume'' means the total volume in cubic feet rounded to the nearest 0.1 cubic feet of either an automobile's enclosed nonseating space that is intended primarily for carrying cargo and is not accessible from the passenger compartment, or the space intended primarily for carrying cargo bounded in the front by a vertical plane that is perpendicular to the longitudinal centerline of the automobile and passes through the rearmost point on the rearmost seat and elsewhere by the automobile's interior surfaces.

Curb weight is defined the same as *vehicle curb weight* in 40 CFR part 86.

Departure angle means the smallest angle, in a plane side view of an automobile, formed by the level surface on which the automobile is standing and a line tangent to the rear tire static loaded radius arc and touching the underside of the automobile rearward of the rear tire.

Gross vehicle weight rating means the value specified by the manufacturer as the loaded weight of a single vehicle.

Passenger-carrying volume means the sum of the front seat volume and, if any, rear seat volume, as defined in 40 CFR 600.315, in the case of automobiles to which that term applies. With respect to automobiles to which that term does not apply, ''passenger-carrying volume'' means the sum in cubic feet, rounded to the nearest 0.1 cubic feet, of the volume of a vehicle's front seat and seats to the rear of the front seat, as applicable, calculated as follows with the head room, shoulder room, and leg room dimensions determined in accordance with the procedures outlined in Society of Automotive Engineers Recommended Practice J1100a, Motor Vehicle Dimensions (Report of Human Factors Engineering Committee, Society of Automotive Engineers, approved September 1973 and last revised September 1975).

(a) For front seat volume, divide 1,728 into the product of the following SAE dimensions, measured in inches to the nearest 0.1 inches, and round the quotient to the nearest 0.001 cubic feet.

(1) H61-Effective head room—front.

(2) W3-Shoulder room—front.

(3) L34-Maximum effective leg room-accelerator.

(b) For the volume of seats to the rear of the front seat, divide 1,728 into the product of the following SAE dimensions, measured in inches to the nearest 0.1 inches, and rounded the quotient to the nearest 0.001 cubic feet.

(1) H63-Effective head room—second.

(2) W4-Shoulder room—second.

(3) L51-Minimum effective leg room—second.

Running clearance means the distance from the surface on which an automobile is standing to the lowest point on the automobile, excluding unsprung weight.

Static loaded radius arc means a portion of a circle whose center is the center of a standard tire-rim combination of an automobile and whose radius is the distance from that center to the level surface on which the automobile is standing, measured with the automobile at curb weight, the wheel parallel to the vehicle's longitudinal centerline, and the tire inflated to the manufacturer's recommended pressure.

Temporary living quarters means a space in the interior of an automobile in which people may temporarily live and which includes sleeping surfaces, such as beds, and household conveniences, such as a sink, stove, refrigerator, or toilet.

(Sec. 9, Pub. L. 89–670, 80 Stat. 981 (49 U.S.C. 1657); sec. 301, Pub. L. 94–163, 89 Stat. 901 (15 U.S.C. 2002); delegation of authority at 41 FR 25015, June 22, 1976)

[42 FR 38362, July 28, 1977, as amended at 43 FR 12013, Mar. 23, 1978]

§ 523.3 Automobile.

(a) An automobile is any 4-wheeled vehicle propelled by fuel which is manufactured primarily for use on public streets, roads, and highways (except

any vehicle operated exclusively on a rail or rails), and that either—

(1) Is rated at 6,000 pounds gross vehicle weight or less; or

(2) Which—

(i) Is rated more than 6,000 pounds gross vehicle weight, but less than 10,000 pounds gross vehicle weight,

(ii) Is a type of vehicle for which the Administrator determines, under paragraph (b) of this section, average fuel economy standards are feasible, and

(iii)(A) Is a type of vehicle for which the Administrator determines, under paragraph (b) of this section, average fuel economy standards will result in significant energy conservation, or

(B) Is a type of vehicle which the Administrator determines, under paragraph (b) of this section, is substantially used for the same purposes as vehicles described in paragraph (a)(1) of this section.

(b) The following vehicles rated at more than 6,000 pounds and less than 10,000 pounds gross vehicle weight are determined to be automobiles:

(1) Vehicles which would satisfy the criteria in § 523.4 (relating to passenger automobiles) but for their gross vehicle weight rating.

(2) Vehicles which would satisfy the criteria in § 523.5 (relating to light trucks) but for their gross vehicle weight rating, and which

(i) Have a basic vehicle frontal area of 45 square feet or less,

(ii) Have a curb weight of 6,000 pounds or less,

(iii) Have a gross vehicle weight rating of 8,500 pounds or less, and

(iv) Are manufactured during the 1980 model year or thereafter.

(Sec. 9, Pub. L. 89–670, 80 Stat. 981 (49 U.S.C. 1657); sec. 301, Pub. L. 94–163, 89 Stat. 901 (15 U.S.C. 2002); delegation of authority at 41 FR 25015, June 22, 1976)

[42 FR 38362, July 28, 1977, as amended at 43 FR 12013, Mar. 23, 1978; 44 FR 4493, Jan. 2, 1979]

§ 523.4 Passenger automobile.

A passenger automobile is any automobile (other than an automobile capable of off-highway operation) manufactured primarily for use in the transportation of not more than 10 individuals.

(Sec. 301, Pub. L. 94–163, 80 Stat. 901 (15 U.S.C. 2001))

[42 FR 38362, July 28, 1977]

§ 523.5 Light truck.

(a) A light truck is an automobile other than a passenger automobile which is either designed for off-highway operation, as described in paragraph (b) of this section, or designed to perform at least one of the following functions:

(1) Transport more than 10 persons;

(2) Provide temporary living quarters;

(3) Transport property on an open bed;

(4) Provide greater cargo-carrying than passenger-carrying volume; or

(5) Permit expanded use of the automobile for cargo-carrying purposes or other nonpassenger-carrying purposes through the removal of seats by means installed for that purpose by the automobile's manufacturer or with simple tools, such as screwdrivers and wrenches, so as to create a flat, floor level, surface extending from the forwardmost point of installation of those seats to the rear of the automobile's interior.

(b) An automobile capable of off-highway operation is an automobile—

(1)(i) That has 4-wheel drive; or

(ii) Is rated at more than 6,000 pounds gross vehicle weight; and

(2) That has at least four of the following characteristics (see Figure 1) calculated when the automobile is at curb weight, on a level surface, with the front wheels parallel to the automobile's longitudinal centerline, and the tires inflated to the manufacturer's recommended pressure—

(i) Approach angle of not less than 28 degrees.

(ii) Breakover angle of not less than 14 degrees.

(iii) Departure angle of not less than 20 degrees.

(iv) Running clearance of not less than 20 centimeters.

(v) Front and rear axle clearances of not less than 18 centimeters each.

(Sec. 9, Pub. L. 89–670, 80 Stat. 981 (49 U.S.C. 1657); sec. 301, Pub. L. 94–163, 89 Stat. 901 (15 U.S.C. 2002); delegation of authority at 41 FR 25015, June 22, 1976)

[42 FR 38362, July 28, 1977, as amended at 43 FR 12013, Mar. 23, 1978; 58 FR 18029, Apr. 7, 1993]

PART 525—EXEMPTIONS FROM AVERAGE FUEL ECONOMY STANDARDS

Sec.

525.1 Scope.
525.2 Purpose.
525.3 Applicability.
525.4 Definitions.
525.5 Limitation on eligibility.
525.6 Requirements for petition.
525.7 Basis for petition.
525.8 Processing of petitions.
525.9 Duration of exemption.
525.10 Renewal of exemption.
525.11 Termination of exemption; amendment of alternative average fuel economy standard.
525.12 Public inspection of information.

AUTHORITY: 15 U.S.C. 2002; 49 CFR 1.50.

SOURCE: 42 FR 38376, July 28, 1977, unless otherwise noted.

§ 525.1 Scope.

This part establishes procedures under section 502(c) of the Motor Vehicle Information and Cost Savings Act, as amended (15 U.S.C. 2002) for the submission and disposition of petitions filed by low volume manufacturers of passenger automobiles to exempt them from the average fuel economy standards for passenger automobiles and to establish alternative average fuel economy standards for those manufacturers.

§ 525.2 Purpose.

The purpose of this part is to provide content and format requirements for low volume manufacturers of passenger automobiles which desire to petition the Administrator for exemption from applicable average fuel economy standards and for establishment of appropriate alternative average fuel economy standards and to give interested persons an opportunity to present data, views and arguments on those petitions.

§ 525.3 Applicability.

This part applies to passenger automobile manufacturers.

§ 525.4 Definitions.

(a) *Statutory terms.* (1) The terms *fuel*, *manufacture*, *manufacturer*, and *model year*, are used as defined in section 501 of the Act.

(2) The terms *average fuel economy*, *fuel economy*, and *model type* are used as defined in 40 CFR 600.002–77.

(3) The term *automobile* means a vehicle determined by the Administrator under 49 CFR part 523 to be an automobile.

(4) The term *passenger automobile* means an automobile determined by the Administrator under 49 CFR part 523 to be a passenger automobile.

(5) The term *customs territory of the United States* is used as defined in 19 U.S.C. 1202.

(b) *Other terms.* (1) The term *base level* and *vehicle configuration* are used as defined in 40 CFR 600.002–77.

(2) The term *vehicle curb weight* is used as defined in 40 CFR 85.002.

(3) The term *interior volume index* is used as defined in 40 CFR 600.315–77.

(4) The term *frontal area* is used as defined in 40 CFR 86.129–79.

(5) The term *basic engine* is used as defined in 40 CFR 600.002–77(a)(21).

(6) The term *designated seating position* is defined in 49 CFR 571.3.

(7) As used in this part, unless otherwise required by the context:

Act means the Motor Vehicle Information and Cost Savings Act (Pub. L. 92–513), as amended by the Energy Policy and Conservation Act (Pub. L. 94–163);

Administrator means the Administrator of the National Highway Traffic Safety Administration;

Affected model year means a model year for which an exemption and alternative average fuel economy standard are requested under this part;

Production mix means the number of passenger automobiles, and their percentage of the petitioner's annual total production of passenger automobiles, in each vehicle configuration which a

petitioner plans to manufacture in a model year; and

Total drive ratio means the ratio of an automobile's engine rotational speed (in revolutions per minute) to the automobile's forward speed (in miles per hour).

(Sec. 301, Pub. L. 94–163, 89 Stat. 871 (15 U.S.C. 2002); delegation of authority at 41 FR 25015, June 22, 1976; sec. 9, Pub. L. 89–670, 80 Stat. 981 (49 U.S.C. 1657))

[42 FR 38376, July 28, 1977, as amended at 44 FR 55579, Sept. 27, 1979]

§ 525.5 Limitation on eligibility.

Any manufacturer that manufactures (whether or not in the customs territory of the United States) 10,000 or more passenger automobiles in the second model year preceding an affected model year or in the affected model year is ineligible for an exemption for that affected model year.

§ 525.6 Requirements for petition.

Each petition filed under this part must—

(a) Identify the model year or years for which exemption is requested;

(b) Be submitted not later than 24 months before the beginning of the affected model year, unless good cause for later submission is shown;

(c) Be submitted in three copies to: Administrator, National Highway Traffic Safety Administration, Washington, DC 20590;

(d) Be written in the English language;

(e) State the full name, address, and title of the official responsible for preparing the petition, and the name and address of the manufacturer;

(f) Set forth in full data, views and arguments of the petitioner supporting the exemption and alternative average fuel economy standard requested by the petitioner, including the information and data specified by § 525.7 and the calculations and analyses used to develop that information and data. No documents may be incorporated by reference in a petition unless the documents are submitted with the petition;

(g) Specify and segregate any part of the information and data submitted under this part that the petitioner wishes to have withheld from public disclosure in accordance with part 512 of this chapter.

(Sec. 301, Pub. L. 94–163, 89 Stat. 871 (15 U.S.C. 2002); delegation of authority at 41 FR 25015, June 22, 1976; sec. 9, Pub. L. 89–670, 80 Stat. 981 (49 U.S.C. 1657))

[42 FR 38376, July 28, 1977, as amended at 44 FR 55579, Sept. 27, 1979; 46 FR 2063, Jan. 8, 1981]

§ 525.7 Basis for petition.

(a) The petitioner shall include the information specified in paragraphs (b) through (h) in its petition.

(b) Whether the petitioner controls, is controlled by, or is under common control with another manufacturer of passenger automobiles, and if so, the nature of that control relationship, and the total number of passenger automobiles manufactured by such other manufacturer or manufacturers.

(c) The total number of passenger automobiles manufactured or likely to be manufactured (whether or not in the customs territory of the United States) by the petitioner in the second model year immediately preceding each affected model year.

(d) For each affected model year, the petitioner's projections of the most fuel efficient production mix of vehicle configurations and base levels of its passenger automobiles which the petitioner could sell in that model year, and a discussion demonstrating that these projections are reasonable. The discussion shall include information showing that the projections are consistent with—

(1) The petitioner's annual total production and production mix of passenger automobiles manufactured or likely to be manufactured in each of the four model years immediately preceding that affected model year;

(2) Its passenger automobile production capacity for that affected model year;

(3) Its efforts to comply with that average fuel economy standard; and

(4) Anticipated consumer demand in the United States for passenger automobiles during that affected model year.

(e) For each affected model year, a description of the following features of each vehicle configuration of the petitioner's passenger automobiles to be

manufactured in that affected model year;

(1) Maximum overall body width, overall length, and overall height, determined in accordance with Motor Vehicle Dimensions SAE J1100a (report of Human Engineering Committee, approved September 1973, as revised September 1975);

(2) Vehicle curb weight;

(3) Number of designated seating positions and interior volume index;

(4) Basic engine, displacement, and SAE rated net power, kilowatts;

(5) Fuel metering system, including the number of carburetor barrels, if applicable;

(6) Drive train configuration and total drive ratio;

(7) Emission control system;

(8) Dynamometer road load setting, determined in accordance with 40 CFR part 86, and the method used to determine that setting, including information indicating whether the road load setting was adjusted to account for the presence of air conditioning and whether the setting was based on the use of radial ply tires; and

(9) Use of synthetic lubricants, low viscosity lubricants, or lubricants with additives that affect friction characteristics in the crankcase, differential, and transmission of the vehicles tested under the requirements of 40 CFR parts 86 and 600. With respect to automobiles which will use these lubricants, indicate which one will be used and explain why that type was chosen. With respect to automobiles which will not use these lubricants, explain the reasons for not so doing.

(f) For each affected model year, a fuel economy value for each vehicle configuration specified in 40 CFR 600.506(a)(2), base level, and model type of the petitioner's passenger automobiles to be manufactured in that affected model year calculated in accordance with subpart C of 40 CFR part 600 and based on tests or analyses comparable to those prescribed or permitted under 40 CFR part 600 and a description of the test procedures or analytical methods.

(g) For each affected model year, an average fuel economy figure for the petitioner's passenger automobiles to be manufactured in that affected model year calculated in accordance with 40 CFR 600.510(e) and based upon the fuel economy values provided under paragraph (f) of this section and upon the petitioner's production mix projected under paragraph (d) of this section for the affected model year.

(h) Information demonstrating that the average fuel economy figure provided for each affected model year under paragraph (g) of this section is the maximum feasible average fuel economy achievable by the petitioner for that model year, including—

(1) For each affected model year and each of the two model years immediately following the first affected model year, a description of the technological means selected by the petitioner for improving the average fuel economy of its automobiles to be manufactured in that model year.

(2) A chronological description of the petitioner's past and planned efforts to implement the means described under paragraph (h)(1) of this section.

(3) A description of the effect of other Federal motor vehicle standards on the fuel economy of the petitioner's automobiles.

(4) For each affected model year, a discussion of the alternative and additional means considered but not selected by the petitioner that would have enabled its passenger automobiles to achieve a higher average fuel economy than is achievable with the means described under paragraph (h)(1) of this section. This discussion must include an explanation of the reasons the petitioner had for rejecting these additional and alternative means.

(5) In the case of a petitioner which plans to increase the average fuel economy of its passenger automobiles to be manufactured in either of the two model years immediately following the first affected model year, an explanation of the petitioner's reasons for not making those increases in that affected model year.

(Sec. 301, Pub. L. 94–163, 89 Stat. 871 (15 U.S.C. 2002); delegation of authority at 41 FR 25015, June 22, 1976; sec. 9, Pub. L. 89–670, 80 Stat. 981 (49 U.S.C. 1657))

[42 FR 38376, July 28, 1977, as amended at 44 FR 55579, Sept. 27, 1979; 58 FR 18029, Apr. 7, 1993]

§ 525.8 Processing of petitions.

(a) If a petition is found not to contain the information required by this part, the petition is informed about the areas of insufficiency and advised that the petition will not receive further consideration until the required information is submitted.

(b) The Administrator may request the petitioner to provide information in addition to that required by this part.

(c) The Administrator publishes a proposed decision in the FEDERAL REGISTER. The proposed decision indicates the proposed grant of the petition and establishment of an alternative average fuel economy standard, or the proposed denial of the petition, specifies the reasons for the proposal and invites written public comment on the proposal.

(d) Any interested person may, upon written request to the Administrator not later than 15 days after the publication of a notice under paragraph (c) of this section, meet informally with an appropriate official of the National Highway Traffic Safety Administration to discuss the petition or notice.

(e) After the conclusion of the period for public comment on the proposal, the Administrator publishes a final decision in the FEDERAL REGISTER. The final decision is based on the petition, written public comments, and other available information. The final decision sets forth the grant of the exemption and establishes an alternative average fuel economy standard or the denial of the petition, and the reasons for the decision.

(Sec. 301, Pub. L. 94–163, 89 Stat. 871 (15 U.S.C. 2002); delegation of authority at 41 FR 25015, June 22, 1976); sec. 9, Pub. L. 89–670, 80 Stat. 981 (49 U.S.C. 1657))

[42 FR 38376, July 28, 1977, as amended at 44 FR 55579, Sept. 27, 1979]

§ 525.9 Duration of exemption.

An exemption may be granted under this part for not more than three model years.

§ 525.10 Renewal of exemption.

A manufacturer exempted under this part may request renewal of its exemption by submitting a petition meeting the requirements of §§ 525.6 and 525.7.

§ 525.11 Termination of exemption; amendment of alternative average fuel economy standard.

(a) Any exemption granted under this part for an affected model year does not apply to a manufacturer that is ineligible under § 525.5 for an exemption in that model year.

(b) The administrator may initiate rulemaking either on his own motion or on petition by an interested person to terminate an exemption granted under this part or to amend an alternative average fuel economy standard established under this part.

(c) Any interested persons may petition the Administrator to terminate an exemption granted under this part or to amend an alternative average fuel economy standard established under this part.

§ 525.12 Public inspection of information.

(a) Except as provided in paragraph (b), any person may inspect available information relevant to a petition under this part, including the petition and any supporting data, memoranda of informal meetings with the petitioner or any other interested persons, and the notices regarding the petition, in the Docket Section of the National Highway Traffic Safety Administration. Any person may obtain copies of the information available for inspection under this paragraph in accordance with Part 7 of the regulations of the Office of the Secretary of Transportation (49 CFR part 7).

(b) Except for the release of confidential information authorized by section 505 of the Act and part 512 of this chapter, information made available for public inspection does not include information for which confidentiality is requested under § 525.6(g) and is granted in accordance with Part 512 and sections 502 and 505 of the Act and section 552(b) of title 5 of the U.S.C.

[46 FR 2063, Jan. 8, 1981]

PART 526—PETITIONS AND PLANS FOR RELIEF UNDER THE AUTOMOBILE FUEL EFFICIENCY ACT OF 1980

Sec.
526.1 General provisions.
526.2 U.S. production by foreign manufacturer.
526.3 Transfer of vehicle from non-domestic to domestic fleet.
526.4 [Reserved]
526.5 Earning offsetting monetary credits in future model years.

AUTHORITY: 15 U.S.C. 2002 and 2003; delegation of authority at 49 CFR 1.50.

SOURCE: 47 FR 7248, Feb. 18, 1982, unless otherwise noted.

§ 526.1 General provisions.

(a) *Applicability*. These regulations apply to petitions and plans submitted under the Automobile Fuel Efficiency Act of 1980, Pub. L. 96–425, as codified in Title V of the Motor Vehicle Information and Cost Savings Act, 15 U.S.C. 2001 *et seq*.

(b) *Address*. Each petition and plan submitted under the applicable provisions of sections 502 and 503 of the Motor Vehicle Information and Cost Savings Act must be addressed to the Administrator, National Highway Traffic Safety Administration, 400 Seventh Street, SW., Washington DC 20590.

(c) *Authority and scope of relief*. Each petition or plan must specify the specific provision of the Motor Vehicle Information and Cost Savings Act under which relief is being sought. The petition or plan must also specify the model years for which relief is being sought.

[47 FR 7248, Feb. 18, 1982, as amended at 59 FR 25576, May 17, 1994]

§ 526.2 U.S. production by foreign manufacturer.

Each petition filed under section 503(b)(3) of the Motor Vehicle Information and Cost Savings Act must contain the following information:

(a) For each model type (as defined by the Environmental Protection Agency in 40 CFR part 600) planned by the petitioner to be sold in the United States (regardless of place of manufacture), and for each model year beginning with the year before the first one for which relief is sought by the petition through the last year covered by the petition, the following information based on the petitioner's current product plan and the assumption that the petition will be granted:

(1) A description of the model type, including car line designation, engine displacement and type, transmission type, and average fuel economy;

(2) U.S. sales projected for the model type;

(3) The average percentage of the cost to the manufacturer of the model type which is attributable to value added in the United States or Canada, determined in accordance with 40 CFR 600.511–80, and the total manufacturing cost per vehicle; and

(4) In the case of model types not offered for sale in the United States before the first year for which relief is sought in the petition or other model types for which expansions in production capacity are planned during the years covered by the petition, information (including any marketing surveys) indicating from where the additional sales will be captured. If sales are projected to be captured from U.S. manufacturers, the petition must provide an estimate of the employment impact on those manufacturers of the lost sales and the gain in employment for the petitioner and its U.S. suppliers.

(b) The total number of persons employed in the United States by the petitioner, excluding non-motor vehicle industry related employees, for each model year covered by the petition and for the model year immediately prior to those years.

(c) A description of how the petitioner's responses to paragraphs (a) and (b) of this section would differ if the petition were denied.

[47 FR 7248, Feb. 18, 1982, as amended at 59 FR 25576, May 17, 1994]

§ 526.3 Transfer of vehicle from non-domestic to domestic fleet.

Each plan submitted under section 503(b)(4) of the Motor Vehicle Information and Cost Savings Act must contain the following information:

(a) For each model year for which relief is sought in the plan and for each model type of automobile sought to be

included by the submitter in its domestic fleet under the plan (i.e., those with at least 50 percent but less than 75 percent U.S. or Canadian value added), provide the following information:

(1) A description of the model type, including engine type and displacement, transmission class, car line designation, and fuel economy;

(2) The projected U.S. sales of the model type;

(3) The average total manufacturing cost per vehicle for the model type;

(4) The percentage of the cost to the manufacturer attributable to value added in the United States or Canada for the model type:

(b) For each year covered by the plan, a list of individual product actions (e.g., change from imported engine to domestically manufactured engine) which will increase the domestic content of the affected vehicles. For each action, provide the model year in which the action will take effect, a description of the nature of the action, and the percentage change in domestic content resulting from the action.

[47 FR 7248, Feb. 18, 1982, as amended at 59 FR 25576, May 17, 1994]

§ 526.4 [Reserved]

§ 526.5 Earning offsetting monetary credits in future model years.

Each plan submitted under section 502(l) of the Motor Vehicle Information and Cost Savings Act must contain the following information:

(a) Projected average fuel economy and production levels for the class of automobiles which may fail to comply with a fuel economy standard and for any other classes of automobiles from which credits may be transferred, for the current model year and for each model year thereafter ending with the last year covered by the plan.

(b) A list and full description of each planned product action (e.g., new model, mix change) which will affect the average fuel economy of the class of automobiles subject to the credit earning plan, for each model year beginning with the current model year and ending with the last year covered by the credit earning plan.

(c) The portion of the petitioner's fleet affected by each product action (e.g., all K-cars with 6-cylinder engines) and the number of affected vehicles.

(d) The fuel economy effect of each product action specified under paragraph (b) of this section per affected vehicle.

[47 FR 7248, Feb. 18, 1982, as amended at 59 FR 25576, May 17, 1994]

PART 529—MANUFACTURERS OF MULTISTAGE AUTOMOBILES

Sec.

529.1 Scope and purpose.
529.2 Applicability.
529.3 Definitions.
529.4 Requirements for incomplete automobile manufacturers.
529.5 Requirements for intermediate manufacturers.
529.6 Requirements for final-stage manufacturers.

AUTHORITY: Sec. 301, Pub. L. 94–163, 80 Stat. 901 (15 U.S.C. 2001); delegation of authority at 41 FR 25015, June 22, 1976.

SOURCE: 42 FR 38372, July 28, 1977, unless otherwise noted.

§ 529.1 Scope and purpose.

This part determines, in cases where more than one person is the manufacturer of an automobile, which person is to be treated as the manufacturer for purposes of compliance with Title V of the Motor Vehicle Information and Cost Savings Act, as amended (15 U.S.C. 2001 et seq.) and rules issued thereunder.

§ 529.2 Applicability.

This part applies to incomplete automobile manufacturers, intermediate manufacturers, and final-stage manufacturers of automobiles that are manufactured in two or more stages.

§ 529.3 Definitions.

(a) *Statutory terms.* (1) The term *automobile* is used as defined in section 501 of the Act and in accordance with the determinations in 49 CFR part 523.

(2) The terms *manufacture*, *manufacturer*, and *fuel economy* are used as defined in section 501 of the Act.

(b) *Other terms.* (1) *Act* means the Motor Vehicle Information and Cost

Savings Act (Pub. L. 92–513), as amended by the Energy Policy and Conservation Act (Pub. L. 94–163).

(2) *Completed automobile* means an automobile that requires no further manufacturing operations to perform its intended function, other than the addition of readily attachable components, such as mirrors or tire and rim assemblies, or minor finishing operations such as painting.

(3) *Curb weight* is defined the same as *vehicle curb weight* in 40 CFR part 86.

(4) *Final-stage manufacturer* means a person who performs such manufacturing operations on an incomplete automobile that it becomes a completed automobile.

(5) *Frontal area* is used as defined in 40 CFR 86.079–2.

(6) *Incomplete automobile* means an assemblage consisting, as a minimum, of frame and chassis structure, power train, steering system, suspension system, and braking system to the extent that those systems are to be part of the completed automobile, that requires further manufacturing operations, other than the addition of readily attachable components, such as mirrors or tire and rim assemblies, or minor finishing operations such as painting, to become a completed automobile.

(7) *Incomplete automobile manufacturer* means a person who manufactures an incomplete automobile by assembling components none of which, taken separately, constitute a complete automobile.

(8) *Intermediate manufacturer* means a person, other than the incomplete automobile manufacturer or the final-stage manufacturer, who performs manufacturing operations on an incomplete automobile.

[42 FR 38372, July 28, 1977, as amended at 42 FR 39983, Aug. 8, 1977]

§ 529.4 Requirements for incomplete automobile manufacturers.

(a) Except as provided in paragraph (c) of this section, §§ 529.5 and 529.6, each incomplete automobile manufacturer is considered, with respect to multistage automobiles incorporating its incomplete automobiles, the manufacturer of the multistage automobiles for purposes of the requirements of Title V and rules issued thereunder.

(b) Each incomplete automobile manufacturer shall furnish with each of its incomplete automobiles, when it is delivered to the subsequent manufacturer, (1) a document that contains the following information—

(i) Name and mailing address of the incomplete automobile manufacturer.

(ii) Month and year during which the incomplete automobile manufacturer performed its last manufacturing operation on the incomplete automobile.

(iii) Identification of the incomplete automobile or group of incomplete automobiles to which the document applies. The identification may be by serial number or otherwise, but it must be sufficient to enable a subsequent manufacturer to ascertain positively that the document applies to a particular incomplete automobile even if the document is not attached to that automobile.

(iv) Fuel economy values determined by the incomplete automobile manufacturer for the automobile in accordance with 40 CFR part 600 and a statement that a fuel economy label containing those values has been prepared in accordance with Environmental Protection Agency regulation by the manufacturer identified in the document.

(v) Maximum curb weight that may not be exceeded by a subsequent manufacturer without invalidating the fuel economy values determined by the incomplete automobile manufacturer.

(vi) Maximum frontal area that may not be exceeded by a subsequent manufacturer without invalidating the fuel economy values determined by the incomplete automobile manufacturer.

(vii) Whether the fuel economy values have been computed with the road load horsepower set to take into account the presence of air conditioning.

(2) A fuel economy label conforming with 40 CFR part 600.

(c)(1) The incomplete automobile manufacturer shall either attach the document specified in paragraph (b)(1) of this section to the incomplete automobile in such a manner that it will not be inadvertently detached or send that document directly to the subsequent manufacturer to which that automobile is delivered.

(2)(i) If the incomplete automobile manufacturer places the portion of the

body including the windshield and front seat side windows on the incomplete automobile, that manufacturer shall attach the fuel economy label specified in paragaph (b)(2) of this section to that automobile in accordance with 40 CFR part 600. If the incomplete automobile manufacturer does not place that portion of the body on the incomplete automobile, that manufacturer shall send that label directly to the subsequent manufacturer to which that automobile is delivered.

(ii) Upon request by an intermediate or final-stage manufacturer for a copy of a fuel economy label that is required by paragraph (b)(2) of this section to have been prepared by the incomplete automobile manufacturer for one of its incomplete automobiles, identified by the requesting manufacturer in the same fashion as in the document specified in paragraph (b)(1) of this section, the incomplete automobile manufacturer shall send that manufacturer a copy of the label.

§529.5 Requirements for intermediate manufacturers.

(a) Except as provided in paragraph (d) of this section and in §529.6, each intermediate manufacturer whose manufacturing operations on an incomplete automobile cause it to exceed the maximum curb weight or maximum frontal area set forth in the document furnished it by the incomplete automobile manufacturer under §529.4(c)(1) or by a previous intermediate manufacturer under paragraph (b) of this section, as appropriate, is considered the manufacturer of the multistage automobile manufactured from that automobile for the purpose of the requirements of Title V and rules issued thereunder, other than that in part 537, Fuel Economy Reports.

(b) Each intermediate manufacturer of an incomplete automobile shall furnish, in the manner specified in §529.4(c), to the subsequent manufacturer of that automobile the document required by §529.4(b) regarding that automobile. If any of the changes in the automobile made by the intermediate manufacturer affect the validity of the fuel economy values or other statement in the document or any addendum attached to the document by a previous manufacturer of the automobile, the intermediate manufacturer shall furnish an addendum to the document that contains its name and mailing address and an indication of all changes that should be made in the document to reflect changes that it made in the automobile.

(c) Each intermediate manufacturer that is required by paragraph (b) of this section to furnish an addendum to a document required by §529.4(b) shall, within 10 days after completing its manufacturing operations, send a copy of the document and addendum to the Administrator of the Environmental Protection Agency and to the manufacturer previously considered under this part to be the manufacturer of the automobile.

(d)(1) If the intermediate manufacturer's manufacturing operations on an incomplete automobile cause it to exceed the maximum curb weight or maximum frontal area set forth in the document furnished it by the incomplete automobile manufacturer under §529.4(c)(1) or a previous intermediate manufacturer under paragraph (b) of this section, as appropriate, that manufacturer shall prepare a new fuel economy label for that automobile in accordance with 40 CFR part 600.

(2) If neither the intermediate manufacturer of an incomplete automobile nor any previous manufacturer of that automobile has placed the portion of the body including the windshield and front seat side windows on that automobile, the intermediate manufacturer shall send the fuel economy label furnished it by the incomplete automobile manufacturer under §529.4(c)(2)(i) or a previous intermediate manufacturer under paragraph (d)(2) of this section or prepared by it under paragraph (d)(1) of this section, as appropriate, directly to the subsequent manufacturer to which that automobile is delivered.

(3) If the intermediate manufacturer places the portion of the body including the windshield and front seat side windows on the incomplete automobile, that manufacturer shall attach the fuel economy label furnished it under §529.4(c)(i) or paragraph (d)(2) of this section or the fuel economy label prepared by it under paragraph (d)(1) of this section, as appropriate, to that

automobile in accordance with 40 CFR part 600.

(4) The intermediate manufacturer shall attach to the incomplete automobile in accordance with 40 CFR part 600 a fuel economy label identical to the label that is required under this part to have been prepared by the manufacturer considered under this part to be the manufacturer of that automobile if:

(i) The portion of the body including the windshield and front seat side windows was added to the incomplete automobile by a previous manufacturer;

(ii) The intermediate manufacturer's manufacturing operations do not cause that automobile to exceed either of the maxima specified in paragraph (d)(1) of this section; and

(iii) That label is not on that automobile when received by the intermediate manufacturer or is removed from that automobile while it is in the possession of that manufacturer.

(5) Upon request by a subsequent intermediate manufacturer or by a final-stage manufacturer for a copy of a fuel economy label prepared by the intermediate manufacturer under paragraph (d)(1) of this section for one of its incomplete automobiles, identified by the requesting manufacturer in the same fashion as in the document specified in § 529.4(b)(1), the intermediate manufacturer shall send that manufacturer a copy of that label.

§ 529.6 Requirements for final-stage manufacturers.

(a) Except as provided in paragraph (c) of this section, each final-stage manufacturer whose manufacturing operations on an incomplete automobile cause the completed automobile to exceed the maximum curb weight or maximum frontal area set forth in the document specified in § 529.4(b) and furnished it by the incomplete automobile manufacturer under § 529.4(c)(1) or by the last intermediate manufacturer under § 529.5(b), as appropriate, is considered the manufacturer of the completed automobile for the purpose of the requirements of Title V and rules issued thereunder, other than those in part 537, Fuel Economy Reports.

(b) Each final-stage manufacturer that becomes the manufacturer of a multistage automobile under paragraph (a) of this section shall, within 10 days after completing its manufacturing operations on that automobile, send written notification of its exceeding the curb weight or frontal area maximum to the Administrator of the Environmental Protection Agency and to the manufacturer previously considered under this part to be the manufacturer of the automobile.

(c)(1) If the final-stage manufacturer becomes the manufacturer of a multistage automobile under paragraph (a)(1) of this section, that manufacturer shall prepare a new fuel economy label for that automobile in accordance with 40 CFR part 600.

(2) If the final-stage manufacturer places the portion of the body including the windshield and front seat side windows on the incomplete automobile, that manufacturer shall attach the fuel economy label furnished by the incomplete automobile manufacturer under § 529.4(c)(2) or by the last intermediate manufacturer under § 529.5(d)(2) or the fuel economy label prepared by the final-stage manufacturer under paragraph (c)(1) of this section, as appropriate, to that automobile in accordance with 40 CFR part 600.

(3) The final-stage manufacturer shall attach to the completed automobile in accordance with 40 CFR part 600 a fuel economy label identical to the label that is required under this part to have been prepared by the manufacturer considered under this part to be the manufacturer of that automobile if:

(i) The portion of the body including the windshield and front seat side windows was added to the completed automobile by a previous manufacturer;

(ii) The final-stage manufacturer's manufacturing operations do not cause that automobile to exceed either of the maxima specified in paragraph (c)(1) of this section; and

(iii) That fuel economy label is not on that automobile when received by that manufacturer or is removed from that automobile while it is in the possession of that manufacturer.

PART 531—PASSENGER AUTOMOBILE AVERAGE FUEL ECONOMY STANDARDS

Sec.
531.1 Scope.
531.2 Purpose.
531.3 Applicability.
531.4 Definitions.
531.5 Fuel economy standards.
531.6 Measurement and calculation procedures.

AUTHORITY: 49 U.S.C. 32902, delegation of authority at 49 CFR 1.50.

SOURCE: 42 FR 33552, June 30, 1977, unless otherwise noted.

§531.1 Scope.

This part establishes average fuel economy standards pursuant to section 502 (a) and (c) of the Motor Vehicle Information and Cost Savings Act, as amended, for passenger automobiles.

[43 FR 28204, June 29, 1978]

§531.2 Purpose.

The purpose of this part is to increase the fuel economy of passenger automobiles by establishing minimum levels of average fuel economy for those vehicles.

§531.3 Applicability.

This part applies to manufacturers of passenger automobiles.

§531.4 Definitions.

(a) *Statutory terms.* (1) The terms *average fuel economy*, *manufacture*, *manufacturer*, and *model year* are used as defined in section 501 of the Act.

(2) The terms *automobile* and *passenger automobile* are used as defined in section 501 of the Act and in accordance with the determination in part 523 of this chapter.

(b) *Other terms.* As used in this part, unless otherwise required by the context—

(1) *Act* means the Motor Vehicle Information and Cost Savings Act, as amended by Pub. L. 94–163.

§531.5 Fuel economy standards.

(a) Except as provided in paragraph (b) of this section, each manufacturer of passenger automobiles shall comply with the following standards in the model years specified:

Model year	Average fuel economy standard (miles per gallon)
1978	18.0
1979	19.0
1980	20.0
1981	22.0
1982	24.0
1983	26.0
1984	27.0
1985	27.5
1986	26.0
1987	26.0
1988	26.0
1989	26.5
1990 and thereafter	27.5

(b) The following manufacturers shall comply with the standards indicated below for the specified model years:

(1) Avanti Motor Corporation.

AVERAGE FUEL ECONOMY STANDARD

Model year	Miles per gallon
1978	16.1
1979	14.5
1980	15.8
1981	18.2
1982	18.2
1983	16.9
1984	16.9
1985	16.9

(2) Rolls-Royce Motors, Inc.

Model year	Average fuel economy standard (miles per gallon)
1978	10.7
1979	10.8
1980	11.1
1981	10.7
1982	10.6
1983	9.9
1984	10.0
1985	10.0
1986	11.0
1987	11.2
1988	11.2
1989	11.2
1990	12.7
1991	12.7
1992	13.8
1993	13.8
1994	13.8
1995	14.6
1996	14.6
1997	15.1
1998	16.3
1999	16.3

(3) Checker Motors Corporation.

AVERAGE FUEL ECONOMY STANDARD

Model year	Miles per gallon
1978	17.6
1979	16.5
1980	18.5
1981	18.3
1982	18.4

(4) Aston Martin Lagonda, Inc.

AVERAGE FUEL ECONOMY STANDARD

Model year	Miles per gallon
1979	11.5
1980	12.1
1981	12.2
1982	12.2
1983	11.3
1984	11.3
1985	11.4

(5) Excalibur Automobile Corporation.

AVERAGE FUEL ECONOMY STANDARD

Model year	Miles per gallon
1978	11.5
1979	11.5
1980	16.2
1981	17.9
1982	17.9
1983	16.6
1984	16.6
1985	16.6

(6) Lotus Cars Ltd.

Model year	Average fuel economy standard (miles per gallon)
1994	24.2
1995	23.3

(7) Officine Alfieri Maserati, S.p.A.

AVERAGE FUEL ECONOMY STANDARD

Model year	Miles per gallon
1978	12.5
1979	12.5
1980	9.5
1984	17.9
1985	16.8

(8) Lamborghini of North America.

AVERAGE FUEL ECONOMY STANDARD

Model year	Miles per gallon
1983	13.7
1984	13.7

(9) LondonCoach Co., Inc.

AVERAGE FUEL ECONOMY STANDARD

Model year	Miles per gallon
1985	21.0
1986	21.0
1987	21.0

(10) Automobili Lamborghini S.p.A./Vector Aeromotive Corporation.

Model year	Average fuel economy standard (miles per gallon)
1995	12.8
1996	12.6
1997	12.5

(11) Dutcher Motors, Inc.

Model year	Average fuel economy standard (miles per gallon)
1986	16.0
1987	16.0
1988	16.0
1992	17.0
1993	17.0
1994	17.0
1995	17.0

(12) MedNet, Inc.

Model year	Average fuel economy standard (miles per gallon)
1996	17.0
1997	17.0
1998	17.0

(13) Vector Aeromotive Corporation.

Model year	Average fuel economy standard (miles per gallon)
1998	12.1

(14) Qvale Automotive Group Srl.

Model year	Average fuel economy standard (miles per gallon)
2000	22.0
2001	22.0

[43 FR 28204, June 29, 1978, as amended at 46 FR 18721, Mar. 26, 1981; 47 FR 55685, Dec. 13, 1982; 51 FR 35620, Oct. 6, 1986; 53 FR 39302, Oct. 6, 1988; 55 FR 12486, Apr. 4, 1990; 55 FR 34018, Aug. 21, 1990; 56 FR 37479, Aug. 7, 1991; 60 FR 47878, Sept. 15, 1995; 61 FR 4370, Feb. 6, 1996; 61 FR 67492, Dec. 23, 1996; 62 FR 17101, Apr. 9, 1997; 62 FR 37154, July 11, 1997; 64 FR 12092, Mar. 11, 1999; 65 FR 58484, Sept. 29, 2000]

§ 531.6 Measurement and calculation procedures.

(a) The average fuel economy of all passenger automobiles that are manufactured by a manufacturer in a model year shall be determined in accordance with procedures established by the Administrator of the Environmental Protection Agency under section 502(a)(1) of the Act and set forth in 40 CFR part 600.

(b) A manufacturer that is eligible to elect a model year in which to include value added in Mexico as domestic value, under subparagraphs (B)(i) and (B)(iii) of 49 U.S.C. 32904(b)(3), shall notify the Administrators of the Environmental Protection Agency and the National Highway Traffic Safety Administration of its election not later than 60 days before it begins production of automobiles for the model year. If an eligible manufacturer does not elect a model year before January 1, 2004, any value added in Mexico will be considered domestic value for automobiles manufactured in the next model year beginning after January 1, 2004, and in subsequent model years.

[42 FR 33552, June 30, 1977, as amended at 64 FR 27203, May 19, 1999]

PART 533—LIGHT TRUCK FUEL ECONOMY STANDARDS

Sec.
533.1 Scope.
533.2 Purpose.
533.3 Applicability.
533.4 Definitions.
533.5 Requirements.
533.6 Measurement and calculation procedures.

AUTHORITY: 49 U.S.C. 32902; delegation of authority at 49 CFR 1.50.

§ 533.1 Scope.

This part establishes average fuel economy standards pursuant to section 502(b) of the Motor Vehicle Information and Cost Savings Act, as amended, for light trucks.

[42 FR 13807, Mar. 14, 1977, as amended at 43 FR 12013, Mar. 23, 1978]

§ 533.2 Purpose.

The purpose of this part is to increase the fuel economy of light trucks by establishing minimum levels of average fuel economy for those vehicles.

[42 FR 13807, Mar. 14, 1977, as amended at 43 FR 12013, Mar. 23, 1978]

§ 533.3 Applicability.

This part applies to manufacturers of light trucks.

[42 FR 13807, Mar. 14, 1977, as amended at 43 FR 12013, Mar. 23, 1978]

§ 533.4 Definitions.

(a) *Statutory terms.* (1) The terms *average fuel economy*, *average fuel economy standard*, *fuel economy*, *import*, *manufacture*, *manufacturer*, and *model year* are used as defined in section 501 of the Act.

(2) The term *automobile* is used as defined in section 501 of the Act and in accordance with the determinations in part 523 of this chapter.

(3) The term *domestically manufactured* is used as defined in section 503(b)(2)(E) of the Act.

(b) *Other terms.* As used in this part, unless otherwise required by the context—

(1) *Act* means the Motor Vehicle Information Cost Savings Act, as amended by Pub. L. 94–163.

(2) *Light truck* is used in accordance with the determinations in part 523 of this chapter.

Captive import means with respect to a light truck, one which is not domestically manufactured but which is imported in the 1980 model year or thereafter by a manufacturer whose principal place of business is in the United States.

4-wheel drive, general utility vehicle means a 4-wheel drive, general purpose

automobile capable of off-highway operation that has a wheelbase of not more than 280 centimeters, and that has a body shape similar to 1977 Jeep CJ–5 or CJ–7, or the 1977 Toyota Land Cruiser.

Basic engine means a unique combination of manufacturer, engine displacement, number of cylinders, fuel system (as distinguished by number of carburetor barrels or use of fuel injection), and catalyst usage.

Limited product line light truck means a light truck manufactured by a manufacturer whose light truck fleet is powered exclusively by basic engines which are not also used in passenger automobiles.

[42 FR 13807, Mar. 14, 1977, as amended at 43 FR 12013, Mar. 23, 1978; 43 FR 46547, Oct. 10, 1978; 58 FR 18029, Apr. 7, 1993]

§ 533.5 Requirements.

(a) Each manufacturer of light trucks shall comply with the following average fuel economy standards, expressed in miles per gallon, in the model year specified as applicable:

TABLE I

Model year	2-wheel drive light trucks		4-wheel drive light trucks		Limited product line light trucks
	Captive imports	Other	Captive imports	Other	
1979	.....	17.2	.....	15.8	.....
1980	16.0	16.0	14.0	14.0	14.0
1981	16.7	16.7	15.0	15.0	14.5

TABLE II

Model year	Combined standard		2-wheel drive light trucks		4-wheel drive light trucks	
	Captive imports	Others	Captive imports	Others	Captive imports	Others
1982	17.5	17.5	18.0	18.0	16.0	16.0
1983	19.0	19.0	19.5	19.5	17.5	17.5
1984	20.0	20.0	20.3	20.3	18.5	18.5
1985	19.5	19.5	19.7	19.7	18.9	18.9
1986	20.0	20.0	20.5	20.5	19.5	19.5
1987	20.5	20.5	21.0	21.0	19.5	19.5
1988	20.5	20.5	21.0	21.0	19.5	19.5
1989	20.5	20.5	21.5	21.5	19.0	19.0
1990	20.0	20.0	20.5	20.5	19.0	19.0
1991	20.2	20.2	20.7	20.7	19.1	19.1

TABLE III

Model Year	Combined standard	
	Captive imports	Other
1992	20.2	20.2
1993	20.4	20.4
1994	20.5	20.5
1995	20.6	20.6

TABLE IV

Model Year	Standard
1996	20.7
1997	20.7
1998	20.7
1999	20.7
2000	20.7
2001	20.7
2002	20.7
2003	20.7
2004	20.7

(b)(1) For model year 1979, each manufacturer may:

(i) Combine its 2- and 4-wheel drive light trucks and comply with the average fuel economy standard in paragraph (a) of this section for 2-wheel drive light trucks; or

(ii) Comply separately with the two standards specified in paragraph (a) of this section.

(2) For model year 1979, the standard specified in paragraph (a) of this section for 4-wheel drive light trucks applies only to 4-wheel drive general utility vehicles. All other 4-wheel drive light trucks in that model year shall be included in the 2-wheel drive category for compliance purposes.

(c) For model years 1980 and 1981, manufacturers of limited product line light trucks may:

(1) Comply with the separate standard for limited product line light trucks, or

(2) Comply with the other standards specified in § 533.5(a), as applicable.

(d) For model years 1982–91, each manufacture may:

(1) Combine its 2- and 4-wheel drive light trucks (segregating captive import and other light trucks) and comply with the combined average fuel economy standard specified in paragraph (a) of this section; or

(2) Comply separately with the 2-wheel drive standards and the 4-wheel drive standards (segregating captive

import and other light trucks) specified in paragraph (a) of this section.

(e) For model year 1992, each manufacturer shall comply with the average fuel economy standard specified in paragraph (a) of this section (segregating captive import and other light trucks).

(f) For model year 1996 and thereafter, each manufacturer shall combine its captive imports with its other light trucks and comply with the average fuel economy standard in paragraph (a) of this section.

[43 FR 12014, Mar. 23, 1978, as amended at 45 FR 20878, Mar. 31, 1980; 47 FR 7250, Feb. 18, 1982; 47 FR 32721, July 29, 1982; 53 FR 11090, Apr. 5, 1988; 55 FR 12497, Apr. 4, 1990; 56 FR 13784, Apr. 4, 1991; 58 FR 18029, Apr. 7, 1993; 59 FR 16323, Apr. 6, 1994; 61 FR 14682, Apr. 3, 1996; 62 FR 15860, Apr. 3, 1997; 63 FR 16701, Apr. 6, 1998; 64 FR 16862, Apr. 7, 1999; 65 FR 17778, Apr. 5, 2000; 66 FR 17516, Apr. 2, 2001; 67 FR 16060, Apr. 4, 2002]

§ 533.6 Measurement and calculation procedures.

(a) Any reference to a class of light trucks manufactured by a manufacturer shall be deemed—

(1) To include all light trucks in that class manufactured by persons who control, are controlled by, or are under common control with, such manufacturer; and

(2) To exclude all light trucks in that class manufactured (within the meaning of paragraph (a)(1) of this section) during a model year by such manufacturer which are exported prior to the expiration of 30 days following the end of such model year.

(b) The average fuel economy of all nonpassenger automobiles that are manufactured by a manufacturer and are subject to § 533.5(b) or to § 533.5(c) shall be determined in accordance with procedures established by the Administrator of the Environmental Protection Agency under section 503(a)(2) of the Act.

[42 FR 13807, Mar. 14, 1977, as amended at 43 FR 12013, Mar. 23, 1978]

PART 535—3-YEAR CARRYFORWARD AND CARRYBACK OF CREDITS FOR LIGHT TRUCKS

Sec.
535.1 Scope.
535.2 Applicability.
535.3 Definitions.
535.4 3-year carryforward and carryback of credits.

AUTHORITY: Sec. 9, Pub. L. 89–670, 80 Stat. 931 (49 U.S.C. 1657); sec. 301, Pub. L. 94–163, 89 Stat. 901 (15 U.S.C. 2001); sec. 6, Pub. L. 96–425, 94 Stat. 1821 (15 U.S.C. 2002); delegation of authority at 49 CFR 1.50.

SOURCE: 45 FR 83235, Dec. 19, 1980, unless otherwise noted.

§ 535.1 Scope.

This part establishes regulations governing 3-year carryforward and carryback of credits for manufacturers of light trucks.

§ 535.2 Applicability.

This part applies to manufacturers of light trucks.

§ 535.3 Definitions.

(a) *Statutory terms.* The terms *average fuel economy*, *average fuel economy standard*, *fuel economy*, *manufacture*, *manufacturer*, and *model year* are used as defined in section 501 of the Act.

(b) *Other terms.* (1) *Act* means the Motor Vehicle Information and Cost Savings Act, as amended by Pub. L. 94–163 and 96–425.

(2) *Administrator* means the Administrator of the National Highway Traffic Safety Administration.

(3) The term *light truck* is used in accordance with the determinations in parts 523 and 533 of this chapter.

(4) The term *class of light trucks* is used in accordance with the determinations in part 533 of this chapter.

§ 535.4 3-year carryforward and carryback of credits

(a) For purposes of this part, credits under this section shall be considered to be available to any manufacturer upon the completion of the model year in which such credits are earned under

paragraph (b) of this section unless under paragraph (c) of this section the credits are made available for use at a time prior to the model year in which earned.

(b) Whenever the average fuel economy for a class of light trucks manufactured by a manufacturer in a particular model year exceeds an applicable average fuel economy standard established in part 533 of this chapter, such manufacturer shall be entitled to credit, calculated under paragraph (c) of this section, which—

(1) Shall be available to be taken into account with respect to the average fuel economy for the same class of light trucks of that manufacturer for any of the three consecutive model years immediately prior to the model year in which such manufacturer exceeds such applicable average fuel economy standard, and

(2) To the extent that such credit is not so taken into account pursuant to paragraph (b)(1) of this section, shall be available to be taken into account with respect to the average fuel economy for the same class of light trucks of that manufacturer for any of the three consecutive model years immediately following the model year in which such manufacturer exceeds such applicable average fuel economy standard.

(c)(1) At any time prior to the end of any model year, a manufacturer which has reason to believe that its average fuel economy for a class of light trucks will be below such applicable standard for that model year may submit a plan demonstrating that such manufacturer will earn sufficient credits under paragraph (b) of this section within the next 3 model years which when taken into account would allow the manufacturer to meet that standard for the model year involved.

(2) Such credits shall be available for the model year involved subject to—

(i) The Administrator approving such plan; and

(ii) The manufacturer earning credits in accordance with such plan.

(3) The Administrator approves any such plan unless the Administrator finds that it is unlikely that the plan will result in the manufacturer earning sufficient credits to allow the manufacturer to meet the standard for the model year involved.

(4) The Administrator provides notice to any manufacturer in any case in which the average fuel economy of that manufacturer is below the applicable standard under part 533 of this chapter, after taking into account credits available under paragraph (b)(1) of this section, and affords the manufacturer a reasonable period (of not less than 60 days) in which to submit a plan under this paragraph.

(d) The amount of credit to which a manufacturer is entitled under this section shall be equal to—

(1) The number of tenths of a mile per gallon by which the average fuel economy for a class of light trucks manufactured by such manufacturer in the model year in which the credit is earned pursuant to this section exceeds the applicable average fuel economy standard established in part 533 of this chapter, multiplied by

(2) The total number of light trucks in that class manufactured by such manufacturer during such model year.

(e) The Administrator takes credits into account for any model year on the basis of the number of tenths of a mile per gallon by which the manufacturer involved was below an applicable average fuel economy standard for a class of light trucks for that model year and the volume of that class of light trucks manufactured that model year by the manufacturer. Credits may not be applied between class of light trucks, except as determined by the Administrator to account for changes made in the definitions of classes between model years. Credits once taken into account for any model year shall not thereafter be available for any other model year. Prior to taking any credit into account, the Administrator provides the manufacturer involved with written notice and reasonable opportunity to comment thereon.

PART 537—AUTOMOTIVE FUEL ECONOMY REPORTS

Sec.
537.1 Scope.
537.2 Purpose.
537.3 Applicability.
537.4 Definitions.

537.5 General requirements for reports.
537.6 General content of reports.
537.7 Pre-model year and mid-model year reports.
537.8 Supplementary reports.
537.9 Determination of fuel economy values and average fuel economy.
537.10 Incorporation by reference.
537.11 Public inspection of information.
537.12 Confidential information.

AUTHORITY: 15 U.S.C. 2005; 49 CFR 1.50.

SOURCE: 47 FR 34986, Aug. 12, 1982, unless otherwise noted.

§ 537.1 Scope.

This part establishes requirements for automobile manufacturers to submit reports to the National Highway Traffic Safety Administration regarding their efforts to improve automotive fuel economy.

§ 537.2 Purpose.

The purpose of this part is to obtain information to aid the National Highway Traffic Safety Administration in valuating automobile manufacturers' plans for complying with average fuel economy standards and in preparing an annual review of the average fuel economy standards.

§ 537.3 Applicability.

This part applies to automobile manufacturers, except for manufacturers subject to an alternate fuel economy standard under section 502(c) of the Act.

§ 537.4 Definitions.

(a) *Statutory terms.* (1) The terms *average fuel economy standard*, *fuel*, *manufacture*, and *model year* are used as defined in section 501 of the Act.

(2) The term *manufacturer* is used as defined in section 501 of the Act and in accordance with part 529 of this chapter.

(3) The terms *average fuel economy*, *fuel economy*, and *model type* are used as defined in subpart A of 40 CFR part 600.

(4) The terms *automobile*, *automobile capable of off-highway operation*, and *passenger automobile* are used as defined in section 501 of the Act and in accordance with the determinations in part 523 of this chapter.

(b) *Other terms.* (1) The term *loaded vehicle weight* is used as defined in subpart A of 40 CFR part 86.

(2) The terms *axle ratio*, *base level*, *body style*, *car line*, *combined fuel economy*, *engine code*, *equivalent test weight*, *gross vehicle weight*, *inertia weight*, *transmission class*, and *vehicle configuration* are used as defined in subpart A of 40 CFR part 600.

(3) The term *light truck* is used as defined in part 523 of this chapter and in accordance with determinations in that part.

(4) The terms *approach angle*, *axle clearance*, *brakeover angle*, *cargo carrying volume*, *departure angle*, *passenger carrying volume*, *running clearance*, and *temporary living quarters* are used as defined in part 523 of this chapter.

(5) The term *incomplete automobile manufacturer* is used as defined in part 529 of this chapter.

(6) As used in this part, unless otherwise required by the context:

(i) *Act* means the Motor Vehicle Information and Cost Savings Act (Pub. L. 92–513), as amended by the Energy Policy and Conservation Act (Pub. L. 94–163).

(ii) *Administrator* means the Administrator of the National Highway Traffic Safety Administration or the Administrator's delegate.

(iii) *Current model year* means:

(A) In the case of a pre-model year report, the full model year immediately following the period during which that report is required by § 537.5(b) to be submitted.

(B) In the case of a mid-model year report, the model year during which that report is required by § 537.5(b) to be submitted.

(iv) *Average* means a production-weighted harmonic average.

(v) *Total drive ratio* means the ratio of an automobile's engine rotational speed (in revolutions per minute) to the automobile's forward speed (in miles per hour).

§ 537.5 General requirements for reports.

(a) For each current model year, each manufacturer shall submit a pre-model year report, a mid-model year report, and, as required by § 537.8, supplementary reports.

(b)(1) The pre-model year report required by this part for each current model year must be submitted during the month of December (e.g., the pre-model year report for the 1983 model year must be submitted during December, 1982).

(2) The mid-model year report required by this part for each current model year must be submitted during the month of July (e.g., the mid-model year report for the 1983 model year must be submitted during July 1983).

(3) Each supplementary report must be submitted in accordance with § 537.8(c).

(c) Each report required by this part must:

(1) Identify the report as a pre-model year report, mid-model year report, or supplementary report as appropriate;

(2) Identify the manufacturer submitting the report;

(3) State the full name, title, and address of the official responsible for preparing the report;

(4) Be submitted in 10 copies to: Administrator, National Highway Traffic Safety Administration, 400 Seventh Street SW., Washington, DC 20590;

(5) Identify the current model year;

(6) Be written in the English language; and

(7)(i) Specify any part of the information or data in the report that the manufacturer believes should be withheld from public disclosure as trade secret or other confidential business information.

(ii) With respect to each item of information or data requested by the manufacturer to be withheld under 5 U.S.C. 552(b)(4) and 15 U.S.C. 2005(d)(1), the manufacturer shall:

(A) Show that the item is within the scope of sections 552(b)(4) and 2005(d)(1);

(B) Show that disclosure of the item would result in significant competitive damage;

(C) Specify the period during which the item must be withheld to avoid that damage; and

(D) Show that earlier disclosure would result in that damage.

(d) Each report required by this part must be based upon all information and data available to the manufacturer 30 days before the report is submitted to the Administrator.

§ 537.6 General content of reports.

(a) *Pre-model year and mid-model year reports.* Except as provided in paragraph (c) of this section, each pre-model year report and the mid-model year report for each model year must contain the information required by § 537.7(a).

(b) *Supplementary report.* Each supplementary report must contain the information required by § 537.8(b) (1), (2), or (3), as appropriate.

(c) *Exceptions.* (1) The pre-model year report is not required to contain the information specified in § 537.7 (b), (c) (1) and (2), or (c)(4) (xiv) and (xx) if that report is required to be submitted before the fifth day after the date by which the manufacturer must submit the preliminary determination of its average fuel economy for the current model year to the Environmental Protection Agency under 40 CFR 600.506, when such determination is required. Each manufacturer that does not include information under the exception in the immediately preceding sentence shall indicate in its report the date by which it must submit that preliminary determination.

(2) The pre-model year report and the mid-model year report submitted by an incomplete automobile manufacturer for any model year are not required to contain the information specified in § 537.7 (c)(4) (xv) through (xviii) and (c)(5). The information provided by the incomplete automobile manufacturer under § 537.7(c) shall be according to base level instead of model type or carline.

§ 537.7 Pre-model year and mid-model year reports.

(a)(1) Provide the information required by paragraphs (b) and (c) of this section for the manufacturer's passenger automobiles for the current model year.

(2) After providing the information required by paragraph (a)(1) of this section provide the information required by paragraphs (b) and (c) for this section of each class, as specified in part 533 of this chapter, of the manufacturer's light trucks for the current model year.

(b) *Projected average fuel economy.* (1) State the projected average fuel economy for the manufacturer's automobiles determined in accordance with §537.9 and based upon the fuel economy values and projected sales figures provided under paragraph (c)(2) of this section.

(2) State the projected final average fuel economy that the manufacturer anticipates having if changes implemented during the model year will cause that average to be different from the average fuel economy projected under paragraph (b)(1) of this section.

(3) State whether the manufacturer believes that the projection it provides under paragraph (b)(2) of this section, or if it does not provide an average under that paragraph, the projection it provides under paragraph (b)(1) of this section sufficiently represents the manufacturer's average fuel economy for the current model year for the purposes of the Act. In the case of a manufacturer that believes that the projection is not sufficiently representative for those purposes, state the specific nature of any reason for the insufficiency and the specific additional testing or derivation of fuel economy values by analytical methods believed by the manufacturer necessary to eliminate the insufficiency and any plans of the manufacturer to undertake that testing or derivation voluntarily and submit the resulting data to the Environmental Protection Agency under 40 CFR 600.509.

(c) *Model type and configuration fuel economy and technical information.* (1) For each model type of the manufacturer's automobiles, provide the information specified in paragraph (c)(2) of this section in tabular form. List the model types in order of increasing average inertia weight from top to bottom down the left side of the table and list the information categories in the order specified in paragraph (c)(2) of this section from left to right across the top of the table.

(2)(i) Combined fuel economy; and

(ii) Projected sales for the current model year and total sales of all model types.

(3) (*Pre-model year report only.*) For each vehicle configuration whose fuel economy was used to calculate the fuel economy values for a model type under paragraph (c)(2) of this section, provide the information specified in paragraph (c)(4) of this section either in tabular form or as a fixed format computer tape. If a tabular form is used then list the vehicle configurations, by model type in the order listed under paragraph (c)(2) of this section, from top to bottom down the left of the table and list the information categories across the top of the table from left to right in the order specified in paragraph (c)(4) of this section. Other formats (such as copies of EPA reports) which contain all the required information in a readily identifiable form are also acceptable. If a computer tape is used, any NHTSA approved fixed format structure may be used, but each vehicle configuration record should identify the manufacturer, model type, and for light trucks the drive wheel code, e.g., 2 or 4 wheel drive. At least the information categories specified here and in paragraph (c)(4) of this section must be provided, but if preferred the tape may contain any additional categories. Each computer tape record must contain all the required categories of information to enable direct reading and interpretation in the fixed format that was approved. There should be no titles, column headings, page numbers, or attachment numbers on the tape. It must be possible to directly calculate and produce the tables specified in paragraph (c)(1) of this section from the records on this tape.

(4)(i) Loaded vehicle weight;

(ii) Equivalent test weight;

(iii) Engine displacement, liters;

(iv) SAE net rated power, kilowatts;

(v) SAE net horsepower;

(vi) Engine code;

(vii) Fuel system (number of carburetor barrels or, if fuel injection is used, so indicate);

(viii) Emission control system;

(ix) Transmission class;

(x) Number of forward speeds;

(xi) Existence of overdrive (indicate yes or no);

(xii) Total drive ratio (N/V);

(xiii) Axle ratio;

(xiv) Combined fuel economy;

(xv) Projected sales for the current model year;

(xvi)(A) In the case of passenger automobiles:

(*1*) Interior volume index, determined in accordance with subpart D of 40 CFR part 600, and

(*2*) Body style;

(B) In the case of light trucks:

(*1*) Passenger-carrying volume, and

(*2*) Cargo-carrying volume;

(xvii) Performance of the function described in § 523.5(a)(5) of this chapter (indicate yes or no);

(xviii) Existence of temporary living quarters (indicate yes or no);

(xix) Frontal area;

(xx) Road load power at 50 miles per hour, if determined by the manufacturer for purposes other than compliance with this part to differ from the road load setting prescribed in 40 CFR 86.177–11(d);

(xxi) Optional equipment which the manufacturer is required under 40 CFR parts 86 and 600 to have actually installed on the vehicle configuration, or the weight of which must be included in the curb weight computation for the vehicle configuration, for fuel economy testing purposes.

(5) For each model type of automobile which is classified as an automobile capable of off-highway operation under part 523 of this chapter, provide the following data:

(i) Approach angle;

(ii) Departure angle;

(iii) Breakover angle;

(iv) Axle clearance;

(v) Minimum running clearance; and

(vi) Existence of 4-wheel drive (indicate yes or no).

(6) The fuel economy values provided under paragraphs (c) (2) and (4) of this section shall be determined in accordance with § 537.9.

[47 FR 34986, Aug. 12, 1982, as amended at 58 FR 18029, Apr. 7, 1993]

§ 537.8 Supplementary reports.

(a)(1) Except as provided in paragraph (d) of this section, each manufacturer whose most recently submitted semiannual report contained an average fuel economy projection under § 537.7(b)(2) or, if no average fuel economy was projected under that section, under § 537.7(b)(1), that was not less than the applicable average fuel economy standard and who now projects an average fuel economy which is less than the applicable standard shall file a supplementary report containing the information specified in paragraph (b)(1) of this section.

(2) Except as provided in paragraph (d) of this section, each manufacturer that determines that its average fuel economy for the current model year as projected under § 537.7(b)(2) or, if no average fuel economy was projected under that section, as projected under § 537.7(b)(1), is less representative than the manufacturer previously reported it to be under § 537.7(b)(3), this section, or both, shall file a supplementary report containing the information specified in paragraph (b)(2) of this section.

(3) Each manufacturer whose premodel year report omits any of the information specified in § 537.7 (b), (c) (1) and (2), or (c)(4) (xvi) and (xxiv) shall file supplementary report containing the information specified in paragraph (b)(3) of this section.

(b)(1) The supplementary report required by paragraph (a)(1) of this section must contain:

(i) Such revisions of and additions to the information previously submitted by the manufacturer under this part regarding the automobiles whose projected average fuel economy has decreased as specified in paragraph (a)(1) of this section as are necessary—

(A) To reflect the decrease and its cause;

(B) To indicate a new projected average fuel economy based upon these additional measures.

(ii) An explanation of the cause of the decrease in average fuel economy that led to the manufacturer's having to submit the supplementary report required by paragraph (a)(1) of this section.

(2) The supplementary report required by paragraph (a)(2) of this section must contain:

(i) A statement of the specific nature of and reason for the insufficiency in the representativeness of the projected average fuel economy;

(ii) A statement of specific additional testing or derivation of fuel economy values by analytical methods believed by the manufacturer necessary to eliminate the insufficiency; and

(iii) A description of any plans of the manufacturer to undertake that testing or derivation voluntarily and submit the resulting data to the Environmental Protection Agency under 40 CFR 600.509.

(3) The supplementary report required by paragraph (a)(3) of this section must contain:

(i) All of the information omitted from the pre-model year report under § 537.6(c)(2); and

(ii) Such revisions of and additions to the information submitted by the manufacturer in its pre-model year report regarding the automobiles produced during the current model year as are necessary to reflect the information provided under paragraph (b)(3)(i) of this section.

(c)(1) Each report required by paragraph (a) (1) or (2) of this section must be submitted in accordance with § 537.5(c) not more than 45 days after the date on which the manufacturer determined, or could have, with reasonable diligence, determined that a report is required under paragraph (a) (1) or (2) of this section.

(2) Each report required by paragraph (a)(3) of this section must be submitted in accordance with § 537.5(c) not later than five days after the day by which the manufacturer is required to submit a preliminary calculation of its average fuel economy for the current model year to the Environmental Protection Agency under 40 CFR 600.506.

(d) A supplementary report is not required to be submitted by the manufacturer under paragraph (a) (1) or (2) of this section:

(1) With respect to information submitted under this part before the most recent semiannual report submitted by the manufacturer under this part, or

(2) When the date specified in paragraph (c) of this section occurs:

(i) During the 60-day period immediately preceding the day by which the mid-model year report for the current model year must be submitted by the manufacturer under this part, or

(ii) After the day by which the pre-model year report for the model year immediately following the current model year must be submitted by the manufacturer under this part.

§ 537.9 Determination of fuel economy values and average fuel economy.

(a) *Vehicle configuration fuel economy values.* (1) For each vehicle configuration for which a fuel economy value is required under paragraph (c) of this section and has been determined and approved under 40 CFR part 600, the manufacturer shall submit that fuel economy value.

(2) For each vehicle configuration specified in paragraph (a)(1) of this section for which a fuel economy value approved under 40 CFR part 600, does not exist, but for which a fuel economy value determined under that part exists, the manufacturer shall submit that fuel economy value.

(3) For each vehicle configuration specified in paragraph (a)(1) of this section for which a fuel economy value has been neither determined nor approved under 40 CFR part 600, the manufacturer shall submit a fuel economy value based on tests or analyses comparable to those prescribed or permitted under 40 CFR part 600 and a description of the test procedures or analytical methods used.

(b) *Base level and model type fuel economy values.* For each base level and model type, the manufacturer shall submit a fuel economy value based on the values submitted under paragraph (a) of this section and calculated in the same manner as base level and model type fuel economy values are calculated for use under subpart F of 40 CFR part 600.

(c) *Average fuel economy.* Average fuel economy must be based upon fuel economy values calculated under paragraph (b) of this section for each model type and must be calculated in accordance with 40 CFR 600.506, using the configurations specified in 40 CFR 600.506(a)(2), except that fuel economy values for running changes and for new base levels are required only for those changes made or base levels added before the average fuel economy is required to be submitted under this part.

§ 537.10 Incorporation by reference.

(a) A manufacturer may incorporate by reference in a report required by this part any document other than a report, petition, or application, or portion thereof submitted to any Federal

department or agency more than two model years before the current model year.

(b) A manufacturer that incorporates by references a document not previously submitted to the National Highway Traffic Safety Administration shall append that document to the report.

(c) A manufacturer that incorporates by reference a document shall clearly identify the document and, in the case of a document previously submitted to the National Highway Traffic Safety Administration, indicate the date on which and the person by whom the document was submitted to this agency.

§ 537.11 Public inspection of information.

Except as provided in § 537.12, any person may inspect the information and data submitted by a manufacturer under this part in the docket section of the National Highway Traffic Safety Administration. Any person may obtain copies of the information available for inspection under this section in accordance with the regulations of the Secretary of Transportation in part 7 of this title.

§ 537.12 Confidential information.

(a) Information made available under § 537.11 for public inspection does not include information for which confidentiality is requested under § 537.5(c)(7), is granted in accordance with section 505 of the Act and section 552(b) of Title 5 of the United States Code and is not subsequently released under paragraph (c) of this section in accordance with section 505 of the Act.

(b) *Denial of confidential treatment.* When the Administrator denies a manufacturer's request under § 537.5(c)(7) for confidential treatment of information, the Administrator gives the manufacturer written notice of the denial and reasons for it. Public disclosure of the information is not made until after the ten-day period immediately following the giving of the notice.

(c) *Release of confidential information.* After giving written notice to a manufacturer and allowing ten days, when feasible, for the manufacturer to respond, the Administrator may make available for public inspection any information submitted under this part that is relevant to a proceeding under the Act, including information that was granted confidential treatment by the Administrator pursuant to a request by the manufacturer under § 537.5(c)(7).

PART 538—MANUFACTURING INCENTIVES FOR ALTERNATIVE FUEL VEHICLES

Sec.

538.1 Scope.
538.2 Purpose.
538.3 Applicability.
538.4 Definitions.
538.5 Minimum driving range.
538.6 Measurement of driving range.
538.7 Petitions for reduction of minimum driving range.
538.8 Gallon Equivalents for Gaseous Fuels.

AUTHORITY: 49 U.S.C. 32901, 32905, and 32906; delegation of authority at 49 CFR 1.50.

SOURCE: 61 FR 14511, Apr. 2, 1996, unless otherwise noted.

§ 538.1 Scope.

This part establishes minimum driving range criteria to aid in identifying passenger automobiles that are dual fueled automobiles. It also establishes gallon equivalent measurements for gaseous fuels other than natural gas.

§ 538.2 Purpose.

The purpose of this part is to specify one of the criteria in 49 U.S.C. chapter 329 ''Automobile Fuel Economy'' for identifying dual fueled passenger automobiles that are manufactured in model years 1993 through 2004. The fuel economy of a qualifying vehicle is calculated in a special manner so as to encourage its production as a way of facilitating a manufacturer's compliance with the Corporate Average Fuel Economy Standards set forth in part 531 of this chapter. The purpose is also to establish gallon equivalent measurements for gaseous fuels other than natural gas.

§ 538.3 Applicability.

This part applies to manufacturers of automobiles.

§ 538.4 Definitions.

(a) *Statutory terms.* (1) The terms *alternative fuel*, *alternative fueled automobile*, and *dual fueled automobile*, are used as defined in 49 U.S.C. 32901(a).

(2) The terms *automobile* and *passenger automobile*, are used as defined in 49 U.S.C. 32901(a), and in accordance with the determinations in part 523 of this chapter.

(3) The term *manufacturer* is used as defined in 49 U.S.C. 32901(a)(13), and in accordance with part 529 of this chapter.

(4) The term *model year* is used as defined in 49 U.S.C. 32901(a)(15).

(b)(1) Other terms. The terms *average fuel economy*, *fuel economy*, and *model type* are used as defined in subpart A of 40 CFR part 600.

(2) The term *EPA* means the U.S. Environmental Protection Agency.

§ 538.5 Minimum driving range.

(a) The minimum driving range that a passenger automobile must have in order to be treated as a dual fueled automobile pursuant to 49 U.S.C. 32901(c) is 200 miles when operating on its nominal useable fuel tank capacity of the alternative fuel, except when the alternative fuel is electricity.

(b) The minimum driving range that a passenger automobile using electricity as an alternative fuel must have in order to be treated as a dual fueled automobile pursuant to 49 U.S.C. 32901(c) is 7.5 miles on its nominal storage capacity of electricity when operated on the EPA urban test cycle and 10.2 miles on its nominal storage capacity of electricity when operated on the EPA highway test cycle.

[61 FR 14511, Apr. 2, 1996, as amended at 63 FR 66068, Dec. 1, 1998]

§ 538.6 Measurement of driving range.

The driving range of a passenger automobile model type not using electricity as an alternative fuel is determined by multiplying the combined EPA urban/highway fuel economy rating when operating on the alternative fuel, by the nominal usable fuel tank capacity (in gallons), of the fuel tank containing the alternative fuel. The combined EPA urban/highway fuel economy rating is the value determined by the procedures established by the Administrator of the EPA under 49 U.S.C. 32904 and set forth in 40 CFR part 600. The driving range of a passenger automobile model type using electricity as an alternative fuel is determined by operating the vehicle in the electric-only mode of operation through the EPA urban cycle on its nominal storage capacity of electricity and the EPA highway cycle on its nominal storage capacity of electricity. Passenger automobile types using electricity as an alternative fuel that have completed the EPA urban cycle after recharging and the EPA highway cycle after recharging shall be deemed to have met the minimum range requirement.

[63 FR 66069, Dec. 1, 1998]

§ 538.7 Petitions for reduction of minimum driving range.

(a) A manufacturer of a model type of passenger automobile capable of operating on both electricity and either gasoline or diesel fuel may petition for a reduced minimum driving range for that model type in accordance with paragraphs (b) and (c) of this section.

(b) Each petition shall:

(1) Be addressed to: Administrator, National Highway Traffic Safety Administration, 400 Seventh Street SW, Washington, DC 20590.

(2) Be submitted not later than the beginning of the first model year in which the petitioner seeks to have the model type treated as an electric dual fueled automobile.

(3) Be written in the English language.

(4) State the full name, address, and title of the official responsible for preparing the petition, and the name and address of the petitioner.

(5) Set forth in full data, views, and arguments of the petitioner, including the information and data specified in paragraph (c) of this section, and the calculations and analyses used to develop that information and data. No documents may be incorporated by reference in a petition unless the documents are submitted with the petition.

(6) Specify and segregate any part of the information and data submitted under this section that the petitioner wishes to have withheld from public

disclosure in accordance with part 512 of this chapter.

(c) Each petitioner shall include the following information in its petition:

(1) Identification of the model type or types for which a lower driving range is sought under this section.

(2) For each model type identified in accordance with paragraph (c)(1) of this section:

(i) The driving range sought for that model type.

(ii) The number of years for which that driving range is sought.

(iii) A description of the model type, including car line designation, engine displacement and type, electric storage capacity, transmission type, and average fuel economy when operating on:

(A) Electricity; and

(B) Gasoline or diesel fuel.

(iv) An explanation of why the petitioner cannot modify the model type so as to meet the generally applicable minimum range, including the steps taken by the petitioner to improve the minimum range of the vehicle, as well as additional steps that are technologically feasible, but have not been taken. The costs to the petitioner of taking these additional steps shall be included.

(3) A discussion of why granting the petition would be consistent with the following factors:

(i) The purposes of 49 U.S.C. chapter 329, including encouraging the development and widespread use of electricity as a transportation fuel by consumers, and the production of passenger automobiles capable of being operated on both electricity and gasoline/diesel fuel;

(ii) Consumer acceptability;

(iii) Economic practicability;

(iv) Technology;

(v) Environmental impact;

(vi) Safety;

(vii) Driveability; and

(viii) Performance.

(d) If a petition is found not to contain the information required by this section, the petitioner is informed about the areas of insufficiency and advised that the petition will not receive further consideration until the required information is received.

(e) The Administrator may request the petitioner to provide information in addition to that required by this section.

(f) The Administrator publishes in the FEDERAL REGISTER a notice of receipt for each petition containing the information required by this section. Any interested person may submit written comments regarding the petition.

(g) In reaching a determination on a petition submitted under this section, the Administrator takes into account:

(1) The purposes of 49 U.S.C. chapter 329, including encouraging the development and widespread use of alternative fuels as transportation fuels by consumers, and the production of alternative fuel powered motor vehicles;

(2) Consumer acceptability;

(3) Economic practicability;

(4) Technology;

(5) Environmental impact;

(6) Safety;

(7) Driveability; and

(8) Performance.

(h) If the Administrator grants the petition, the petitioner is notified in writing, specifying the reduced minimum driving range, and specifying the model years for which the reduced driving range applies. The Administrator also publishes a notice of the grant of the petition in the FEDERAL REGISTER and the reasons for the grant.

(i) If the Administrator denies the petition, the petitioner is notified in writing. The Administrator also publishes a notice of the denial of the petition in the FEDERAL REGISTER and the reasons for the denial.

[63 FR 66069, Dec. 1, 1998]

§ 538.8 Gallon Equivalents for Gaseous Fuels.

The gallon equivalent of gaseous fuels, for purposes of calculations made under 49 U.S.C. 32905, are listed in Table I:

TABLE I—GALLON EQUIVALENT MEASUREMENTS FOR GASEOUS FUELS PER 100 STANDARD CUBIC FEET

Fuel	Gallon equivalent measurement
Compressed Natural Gas	0.823
Liquefied Natural Gas	0.823
Liquefied Petroleum Gas (Grade HD–5)*	0.726
Hydrogen	0.259

TABLE I—GALLON EQUIVALENT MEASUREMENTS FOR GASEOUS FUELS PER 100 STANDARD CUBIC FEET—Continued

Fuel	Gallon equivalent measurement
Hythane (Hy5)	0.741

*Per gallon unit of measure.

PART 541—FEDERAL MOTOR VEHICLE THEFT PREVENTION STANDARD

Sec.
541.1 Scope.
541.2 Purpose.
541.3 Application.
541.4 Definitions.
541.5 Requirements for passenger motor vehicles.
541.6 Requirements for replacement parts.
APPENDIX A TO PART 541—LINES SUBJECT TO THE REQUIREMENTS OF THIS STANDARD
APPENDIX A–I TO PART 541—HIGH-THEFT LINES WITH ANTITHEFT DEVICES WHICH ARE EXEMPTED FROM THE PARTS-MARKING REQUIREMENTS OF THIS STANDARD PURSUANT TO 49 CFR PART 543
APPENDIX A-II TO PART 541—HIGH-THEFT LINES WITH ANTITHEFT DEVICES WHICH ARE EXEMPTED IN-PART FROM THE PARTS-MARKING REQUIREMENTS OF THIS STANDARD PURSUANT TO 49 CFR PART 543
APPENDIX B TO PART 541—PASSENGER MOTOR VEHICLE LINES (EXCEPT LIGHT-DUTY TRUCKS) WITH THEFT RATES BELOW THE 1990/91 MEDIAN THEFT RATE, SUBJECT TO THE REQUIREMENTS OF THIS STANDARD
APPENDIX C TO PART 541—CRITERIA FOR SELECTING LINES LIKELY TO HAVE HIGH THEFT RATES

AUTHORITY: 49 U.S.C. 33101, 33102, 33103, 33105; delegation of authority at 49 CFR 1.50.

SOURCE: 50 FR 43190, Oct. 24, 1985, unless otherwise noted.

§541.1 Scope.

This standard specifies performance requirements for identifying numbers or symbols to be placed on major parts of certain passenger motor vehicles.

§541.2 Purpose.

The purpose of this standard is to reduce the incidence of motor vehicle thefts by facilitating the tracing and recovery of parts from stolen vehicles.

§541.3. Application.

This standard applies to the following:

(a) Passenger motor vehicle parts identified in §541.5(a) that are present:

(1) In the passenger motor vehicle lines listed in appendix A of this part;

(2) Beginning with model year 1997, in passenger motor vehicle lines which NHTSA has finally determined, pursuant to 49 CFR part 542, to be high theft based on the 1990/91 median theft rate; and

(3) Beginning with model year 1997, in passenger motor vehicle lines listed in appendix B of this part.

(b) Replacement parts for passenger motor vehicle lines described in §541.3(a) (1) and (2), if the part is identified in §541.5(a).

[59 FR 64168, Dec. 13, 1994]

§541.4 Definitions.

(a) *Statutory terms.* All terms defined in 49 U.S.C. chapter 331 are used in accordance with their statutory meanings unless otherwise defined in paragraph (b) of this section.

(b) *Other definitions.* (1) *Interior surface* means, with respect to a vehicle part, a surface that is not directly exposed to sun and precipitation.

(2) *Light-duty truck (LDT)* means a motor vehicle, with motive power, except a trailer, designed primarily for the transportation of property or special purpose equipment, that is rated at 6,000 pounds gross vehicle weight or less.

(3) *Line* means a name which a manufacturer applies to a group of motor vehicles of the same make which have the same body or chassis, or otherwise are similar in construction or design. A ''line'' may, for example, include 2-door, 4-door, station wagon, and hatchback vehicles of the same make.

(4) *1990/91 median theft rate* means 3.5826 thefts per thousand vehicles produced.

(5) *Multipurpose passenger vehicle (MPV)* means a passenger motor vehicle which is constructed either on a truck chassis or with special features for occasional off-road operation and which is rated at 6,000 pounds gross vehicle weight or less.

(6) *Passenger car* is used as defined in §571.3 of this chapter.

(7) *VIN* means the vehicle identification number required by part 565 of this chapter.

[59 FR 64168, Dec. 13, 1994, as amended at 61 FR 29033, June 7, 1996]

§ 541.5 Requirements for passenger motor vehicles.

(a) Each passenger motor vehicle subject to this standard must have an identifying number affixed or inscribed on each of the parts specified in paragraphs (a)(1) through (a)(18) inclusive, if the part is present on the passenger motor vehicle. In the case of passenger motor vehicles not originally manufactured to comply with applicable U.S. vehicle safety and bumper standards, each such motor vehicle subject to this standard must have an identifying number inscribed in a manner which conforms to paragraph (d)(2) of this section, on each of the parts specified in paragraphs (a)(1) through (a)(18), inclusive, if the part is present on the motor vehicle.

(1) Engine.
(2) Transmission.
(3) Right front fender.
(4) Left front fender.
(5) Hood.
(6) Right front door.
(7) Left front door.
(8) Right rear door.
(9) Left rear door.
(10) Sliding or cargo door(s).
(11) Front bumper.
(12) Rear bumper.
(13) Right rear quarter panel (passenger cars).
(14) Left rear quarter panel (passenger cars).
(15) Right-side assembly (MPVs).
(16) Left-side assembly (MPVs).
(17) Pickup box, and/or cargo box (LDTs).
(18) Rear door(s) (both doors in case of double doors), decklid, tailgate, or hatchback (whichever is present).

(b)(1) Except as provided in paragraphs (b)(2) and (b)(3) of this section, the number required to be inscribed or affixed by paragraph (a) shall be the VIN of the passenger motor vehicle.

(2) In place of the VIN, manufacturers who were marking engines and/or transmissions with a VIN derivative consisting of at least the last eight characters of the VIN on October 24, 1984, may continue to mark engines and/or transmissions with such VIN derivative.

(3) In the case of passenger motor vehicles not originally manufactured to comply with U.S. vehicle safety and bumper standards, the number required to be inscribed by paragraph (a) of this section shall be the original vehicle identification number assigned to the motor vehicle by its original manufacturer in the country where the motor vehicle was originally produced or assembled.

(c) The characteristics of the number required to be affixed or inscribed by paragraph (a) of this section shall satisfy the size and style requirements set forth for vehicle certification labels in § 567.4(g) of this chapter.

(d) The number required by paragraph (a) of this section must be affixed by means that comply with paragraph (d)(1) of this section or inscribed by means that comply with paragraph (d)(2) of this section.

(1) *Labels.* (i) The number must be printed indelibly on a label, and the label must be permanently affixed to the passenger motor vehicle's part.

(ii) The number must be placed on each part specified in paragraph (a) of this section in a location such that the number is, if practicable, on an interior surface of the part as installed on the vehicle and in a location where it:

(A) Will not be damaged by the use of any tools necessary to install, adjust, or remove the part and any adjoining parts, or any portions thereof;

(B) Is on a portion of the part not likely to be damaged in a collision; and

(C) Will not be damaged or obscured during normal dealer preparation operations (including rustproofing and undercoating).

(iii) The number must be placed on each part specified in paragraph (a) of this section in a location that is visible without further disassembly once the part has been removed from the vehicle.

(iv) The number must be placed entirely within the target area specified by the original manufacturer for that part, pursuant to paragraph (e) of this section, on each part specified in paragraph (a) of this section.

(v) Removal of the label must—

(A) Cause the label to self-destruct by tearing or rendering the number on the label illegible, and

(B) Discernibly alter the appearance of that area of the part where the label was affixed by leaving residual parts of the label or adhesive in that area, so that investigators will have evidence that a label was originally present.

(vi) Alteration of the number on the label must leave traces of the original number or otherwise visibly alter the appearance of the label material.

(vii) The label and the number shall be resistant to counterfeiting.

(viii) The logo or some other unique identifier of the vehicle manufacturer must be placed in the material of the label in a manner such that alteration or removal of the logo visibly alters the appearance of the label.

(2) *Other means of identification.* (i) Removal or alteration of any portion of the number must visibly alter the appearance of the section of the vehicle part on which the identification is marked.

(ii) The number must be placed on each part specified in paragraph (a) of this section in a location that is visible without further disassembly once the part has been removed from the vehicle.

(iii) The number must be placed entirely within the target area specified by the original manufacturer for that part, pursuant to paragraph (e) of this section, on each part specified in paragraph (a) of this section.

(e) *Target areas.* (1) Each manufacturer that is the original producer who installs or assembles the covered major parts on a line shall designate a target area for the identifying numbers to be marked on each part specified in paragraph (a) of this section for each of its lines subject to this standard. The target area shall not exceed 50 percent of the surface area on the surface of the part on which the target area is located.

(2) Each manufacturer subject to paragraph (e)(1) of this section shall, not later than 30 days before the line is introduced into commerce, inform NHTSA in writing of the target areas designated for each line listed in appendix A. The information should be submitted to: Administrator, National Highway Traffic Safety Administration, 400 Seventh Street, SW, Washington, DC 20590.

(3) The target areas designated by the original vehicle manufacturer for a part on a line shall be maintained for the duration of the production of such line, unless a restyling of the part makes it no longer practicable to mark the part within the original target area. If there is such a restyling, the original vehicle manufacturer shall inform NHTSA of that fact and the new target area, in accordance with the requirements of paragraph (e)(2) of this section.

[59 FR 64168, Dec. 13, 1994]

§ 541.6 Requirements for replacement parts.

(a) Each replacement part for a part specified in § 541.5(a) must have the registered trademark of the manufacturer of the replacement part, or some other unique identifier if the manufacturer does not have a registered trademark, and the letter ''R'' affixed or inscribed on such replacement part by means that comply with § 541.5(d), except as provided in paragraph (d) of this section. In the case of replacement parts subject to the marking requirements of this section, which were not originally manufactured for sale in the United States, the importer of the part shall inscribe its registered trademark, or some other unique identifier if the importer does not have a registered trademark, and the letter ''R'' on the part by means that comply with § 541.5(d)(2), except as provided in paragraph (d) of this section.

(b) A replacement part subject to paragraph (a) of this section shall not be marked pursuant to § 541.5.

(c) The trademark and the letter ''R'' required by paragraph (a) of this section must be at least one centimeter high.

(d) The trademark and the letter ''R'' required by paragraph (a) of this section must be placed entirely within the target area specified by the vehicle manufacturer, pursuant to paragraph (e) of this section.

(e) *Target areas.* (1) Each manufacturer that is the original producer or assembler of the vehicle for which the

replacement part is designed shall designate a target area for the identifying symbols to be marked on each replacement part subject to the requirements of paragraph (a) of this section. Such target areas shall not exceed 25 percent of the surface area of the surface on which the replacement part marking will appear.

(2) The boundaries of the target area designated under paragraph (e)(1) of this section shall be at least 10 centimeters at all points from the nearest boundaries of the target area designated for that part under §541.5(e) of this part.

(3) Each manufacturer subject to paragraph (e)(1) of this section shall inform NHTSA in writing of the target areas designated for each replacement part subject to paragraph (a) of this section, at the same time as it informs the agency of the target area designated for the original equipment parts of the line, pursuant to §541.5(e)(2) of this part. The information should be submitted to: Administrator, National Highway Traffic Safety Administration, 400 Seventh Street, SW., Washington, DC 20590.

(4) The target area designated by the original vehicle manufacturer for the parts subject to the requirements of paragraph (a) of this section shall be maintained for the duration of the production of such replacement part, unless a restyling of the part makes it no longer practicable to mark the part within the original target area. If there is such a restyling, the original vehicle manufacturer shall inform NHTSA of that fact and the new target area, in accordance with the requirements of paragraph (e)(3) of this section.

(f) Each replacement part must bear the symbol ''DOT'' in letters at least one centimeter high within 5 centimeters of the trademark and of the letter ''R'', and entirely within the target area specified under paragraph (d) of this section. The symbol ''DOT'' constitutes the manufacturer's certification that the replacement part conforms to the applicable theft prevention standard, and shall be inscribed or affixed by means that comply with paragraph (a) of this section. In the case of replacement parts subject to the requirements of paragraph (a) of this section, which were not originally manufactured for sale in the United States, the importer shall inscribe the ''DOT'' symbol before the part is imported into the United States.

Appendix A to Part 541—Lines Subject to the Requirements of This Standard

Manufacturer	Subject lines
Alfa Romeo	Milano 161
	164
BMW	Z3
	Z8
	6 Car Line
Consulier	Consulier GTP
Daewoo	Korando
	Musso (MPV)
	Nubira
Daimlerchrysler	Chrysler Cirrus
	Chrysler Fifth Avenue/Newport
	Chrysler Laser
	Chrysler LeBaron/Town & Country
	Chrysler LeBaron GTS
	Chrysler's TC
	Chrysler New Yorker Fifth Avenue
	Chrysler Sebring
	Chrysler Town & Country
	Dodge 600
	Dodge Aries
	Dodge Avenger
	Dodge Colt
	Dodge Daytona
	Dodge Diplomat
	Dodge Lancer
	Dodge Neon
	Dodge Shadow
	Dodge Stratus
	Dodge Stealth
	Eagle Summit
	Eagle Talon
	Jeep Cherokee (MPV)
	Jeep Grand Cherokee (MPV)
	Jeep Liberty (MPV) [1]
	Jeep Wrangler (MPV)
	Plymouth Caravelle
	Plymouth Colt
	Plymouth Laser
	Plymouth Gran Fury
	Plymouth Neon
	Plymouth Reliant
	Plymouth Sundance
	Plymouth Breeze
Ferrari	Mondial 8
	328
Ford	Ford Aspire
	Ford Escort
	Ford Probe
	Ford Thunderbird
	Lincoln Continental
	Lincoln Mark
	Lincoln Town Car
	Mercury Capri
	Mercury Cougar
	Merkur Scorpio
	Merkur XR4Ti
General Motors	Buick Electra
	Buick Reatta
	Buick Skylark
	Chevrolet Malibu
	Chevrolet Nova
	Chevrolet Blazer (MPV)
	Chevrolet Prizm
	Chevrolet S–10 Pickup
	Geo Storm
	Chevrolet Tracker (MPV)
	GMC Jimmy (MPV)
	GMC Sonoma Pickup
	Oldsmobile Achieva (MYs 1997–1998)
	Oldsmobile Bravada
	Oldsmobile Cutlass
	Oldsmobile Cutlass Supreme (MYs 1988–1997)
	Oldsmobile Intrigue
	Pontiac Fiero
	Saturn Sports Coupe [2]
	Saturn ION
Honda	Accord
	CRV (MPV)
	Odyssey (MPV)
	Passport
	Pilot (MPV) [3]
	Prelude
	S2000
	Acura Integra
	Acura MDX (MPV)
	Acura RSX
Hyundai	Accent
	Sonata
	Tiburon
Isuzu	Amigo
	Impulse
	Rodeo
	Rodeo Sport
	Stylus
	Trooper/Trooper II
	VehiCross (MPV)
Jaguar	XJ
Kia Motors	Optima
	Rio
	Sephia (1998–2002)
	Spectra
Lotus	Elan
Maserati	Biturbo
	Quattroporte 228
Mazda	626
	MX–3
	MX–5 Miata
	MX–6
Mercedes-Benz	190 D–190 E
	260E (1987–1989)
	300 SE (1988–1991)
	300 TD (1987)
	300 SDL (1987)
	300 SEL
	350 SDL (1990–1991)
	420 SEL (1987–1991)
	560 SEL (1987–1991)
	560 SEC (1987–1991)
	560 SL

Manufacturer	Subject lines
Mitsubishi	Cordia
	Eclipse
	Lancer
	Mirage
	Montero
	(MPV)
	Montero Sport (MPV)
	Tredia
	3000GT
Nissan	240SX
	Sentra/200SX
	Xterra
	Infiniti M45 [3]
Peugeot	405
Porsche	924S
Subaru	XT
	SVX
	Baja [3]
	Forester
	Legacy
Suzuki	Aerio X90 (MPV)
	Sidekick (MYs 1997–1998)
	Vitara/Grand Vitara (MPV)
Toyota	Toyota 4-Runner (MPV)
	Toyota Avalon
	Toyota Camry
	Toyota Celica
	Toyota Corolla/Corolla Sport
	Toyota Echo
	Toyota Highlander (MPV)
	Toyota Matrix (MPV) [3]
	Toyota MR2
	Toyota MR2 Spyder
	Toyota Prius
	Toyota RAV4 (MPV)
	Toyota Sienna (MPV)
	Toyota Tercel
	Lexus GX470 (MPV) [3]
	Lexus IS300
	Lexus RX300 (MPV)
Volkswagen	Audi Quattro
	Volkswagen Scirocco

[1] Replaced the Jeep Cherokee in MY 2002.
[2] Renamed the Saturn ION beginning with MY 2003.
[3] Lines added for MY 2003.

Appendix A–I To Part 541—High-Theft Lines With Antitheft Devices Which are Exempted From the Parts-Marking Requirements of This Standard Pursuant to 49 CFR Part 543

Manufacturer	Subject lines
Austin Rover	Sterling
BMW	MINI
	X5
	(confidential nameplate) [1]
	3 Car Line
	5 Car Line
	7 Car Line
	8 Car Line
Daimlerchrysler	Chrysler Conquest
	Chrysler Imperial
Ford	Mustang
	Mercury Sable
	Mercury Grand Marquis
	Taurus
General Motors	Buick LeSabre
	Buick Park Avenue
	Buick Regal/Century
	Buick Riviera
	Cadillac Allante
	Cadillac Deville
	Cadillac Seville
	Chevrolet Cavalier
	Chevrolet Corvette
	Chevrolet Impala/Monte Carlo
	Chevrolet Lumina/Monte Carlo (MYs 1996–1999)
	Chevrolet Malibu
	Chevrolet Venture
	Oldsmobile Alero
	Oldsmobile Aurora
	Oldsmobile Toronado
	Pontiac Bonneville
	Pontiac Grand Am
	Pontiac Grand Prix [1]
	Pontiac Sunfire
Honda	Acura CL
	Acura Legend (MYs 1991–1996)
	Acura NSX
	Acura RL
	Acura SLX
	Acura TL
	Acura Vigor (MYs 1992–1995)
Isuzu	Axiom.[1]
	Impulse (MYs 1987–1991)
Jaguar	XK
Mazda [1]	6
	929
	RX–7
	Millenia
Mercedes-BENZ	124 Car Line (the models within this line are):
	260E
	300D
	300E
	300CE
	300TE
	400E
	500E
	129 Car Line (the models within this line are):
	300SL
	500SL
	600SL
	SL320
	SL500
	SL600
	202 Car Line (the models within this line are):
	C220
	C230
	C280
	C36
	C43
Mitsubishi	Galant
	Starion
	Diamante

Manufacturer	Subject lines
Nissan	Nissan Altima
	Nissan Maxima
	Nissan Pathfinder
	Nissan 300ZX
	Infiniti G35 [1]
	Infiniti I30
	Infiniti J30
	Infiniti M30
	Infiniti QX4
	Infiniti Q45
Porsche	911
	928
	968
	986 Boxster
Saab	9–3
	900 (1994–1998)
	9000 (1989–1998)
Toyota	Toyota Supra
	Toyota Cressida
	Lexus ES
	Lexus GS
	Lexus LS
	Lexus SC
Volkswagen	Audi 5000S
	Audi 100/A6
	Audi 200/S4/S6
	Audi Allroad Quattro (MPV)
	Audi Cabriolet
	Volkswagen Cabrio
	Volkswagen Corrado
	Volkswagen Golf/GTI
	Volkswagen Jetta/Jetta III
	Volkswagen Passat

[1] Lines exempted in full beginning with MY 2003.

[67 FR 44087, July 1, 2002]

Appendix A–II to Part 541—High-Theft Lines With Antitheft Devices Which Are Exempted In-Part From the Parts-Marking Requirements of This Standard Pursuant to 49 CFR Part 543

Manufacturers	Subject lines	Parts to be marked
General Motors	Cadillac Eldorado	Engine, Transmission.
	Cadillac Concours	Engine, Transmission.
	Oldsmobile Ninety-Eight	Engine, Transmission.
	Pontiac Firebird	Engine, Transmission.
	Chevrolet Camaro	Engine, Transmission.
	Oldsmobile Eighty-Eight	Engine, Transmission.

[66 FR 40625, Aug. 3, 2001]

Appendix B to Part 541—Passenger Motor Vehicle Lines (Except Light-Duty Trucks) With Theft Rates Below the 1990/91 Median Theft Rate, Subject to the Requirements of This Standard

Manufacturer	Subject lines
Ford	Crown Victoria.
General Motors	Chevrolet Astro (MPV).
	GMC Safari (MPV).
Honda	Civic.

[66 FR 40625, Aug. 3, 2001]

Appendix C to Part 541—Criteria for Selecting Lines Likely To Have High Theft Rates

Scope

These criteria specify the factors the Administrator will take into account in determining whether a new line is likely to have a high theft rate, and, therefore, whether such line will be subject to the requirements of this theft prevention standard.

Purpose

The purpose of these criteria is to enable the Administrator to select, by agreement with the manufacturer, if possible, those new lines which are likely to have high theft rates.

Application

These criteria apply to lines of passenger motor vehicles initially introduced into commerce on or after January 1, 1983.

Methodology

These criteria will be applied to each line initially introduced into commerce on or after January 1, 1983. The likely theft rate for such lines will be determined in relation to the national median theft rate for 1983 and 1984. If the line is determined to be likely to have a theft rate above the national median, the Administrator will select such line for coverage under this theft prevention standard.

Criteria

1. Retail price of the vehicle line.
2. Vehicle image or marketing strategy.
3. Vehicle lines with which the new line is intended to compete, and the theft rates of such lines.
4. Vehicle line(s), if any, which the new line is intended to replace, and the theft rate(s) of such line(s).
5. Presence or absence of any new theft prevention devices or systems.
6. Preliminary theft rate for the line, if it can be determined on the basis of currently available data.

PART 542—PROCEDURES FOR SELECTING LINES TO BE COVERED BY THE THEFT PREVENTION STANDARD

Sec.

542.1 Procedures for selecting new lines that are likely to have high or low theft rates.
542.2 Procedures for selecting low theft new lines with a majority of major parts interchangeable with those of a high theft line.

AUTHORITY: 15 U.S.C. 2021, 2022, and 2023; delegation of authority at 49 CFR 1.50.

SOURCE: 59 FR 21672, Apr. 26, 1994, unless otherwise noted.

§ 542.1 Procedures for selecting new lines that are likely to have high or low theft rates.

(a) *Scope*. This section sets forth the procedures for motor vehicle manufacturers and NHTSA to follow in the determination of whether any new vehicle line is likely to have a theft rate above or below the median theft rate.

(b) *Application*. These procedures apply to each manufacturer that plans to introduce a new line into commerce in the United States on or after April 24, 1986, and to each of those new lines.

(c) *Procedures*. (1)(i) For each new line introduced before the 1997 model year, each manufacturer uses the criteria in appendix C of part 541 of this chapter to evaluate each new line and to conclude whether the new line is likely to have a theft rate above or below the median theft rate established for calendar years 1990 and 1991.

(ii) For each new line to be introduced for the 1997 or subsequent model years, each manufacturer shall use the criteria in appendix C of part 541 of this chapter to evaluate each new line and to conclude whether the new line is likely to have a theft rate above or below the median theft rate.

(2)(i) For each new line to be introduced before the 1997 model year, the manufacturer submits its evaluations and conclusions made under paragraph (c)(1)(i) of this section, together with the underlying factual information, to NHTSA not less than 18 months before the date of introduction. The manufacturer may request a meeting with the agency to further explain the bases for its evaluations and conclusions.

(ii) For each new line to be introduced for the 1997 or subsequent model years, the manufacturer shall submit its evaluations and conclusions made under paragraph (c)(1)(ii) of this section, together with the underlying factual information, to NHTSA not less than 15 months before the date of introduction. The manufacturer may request a meeting with the agency during this period to further explain the bases for its evaluations and conclusions.

(3) Within 90 days after its receipt of the manufacturer's submission under paragraph (c)(2) of this section, the agency independently evaluates the new line using the criteria in appendix C of part 541 of this chapter and, on a preliminary basis, determines whether the new line should or should not be subject to § 541.2 of this chapter. NHTSA informs the manufacturer by letter of the agency's evaluations and determinations, together with the factual information considered by the agency in making them.

(4) The manufacturer may request the agency to reconsider any of its preliminary determinations made under paragraph (c)(3) of this section. The manufacturer shall submit its request to the agency within 30 days of its receipt of the letter under paragraph

(c)(3) of this section. The request shall include the facts and arguments underlying the manufacturer's objections to the agency's preliminary determinations. During this 30-day period, the manufacturer may also request a meeting with the agency to discuss those objections.

(5) Each of the agency's preliminary determinations under paragraph (c)(3) of this section shall become final 45 days after the agency sends the letter specified in paragraph (c)(3) of this section unless a request for reconsideration has been received in accordance with paragraph (c)(4) of this section. If such a request has been received, the agency makes its final determinations within 60 days of its receipt of the request. NHTSA informs the manufacturer by letter of those determinations and its response to the request for reconsideration.

§ 542.2 Procedures for selecting low theft new lines with a majority of major parts interchangeable with those of a high theft line.

(a) *Scope*. This section sets forth the procedures for motor vehicle manufacturers and NHTSA to follow in the determination of whether any new lines that will be likely to have a low theft rate have major parts interchangeable with a majority of the covered major parts of a line having or likely to have a high theft rate.

(b) *Application*. These procedures apply to:

(1) Each manufacturer that produces—

(i) At least one passenger motor vehicle line that has been or will be introduced into commerce in the United States and that has been listed in appendix A of part 541 of this chapter or that has been identified by the manufacturer or preliminarily or finally determined by NHTSA to be a high-theft line under § 542.1, and

(ii) At least one passenger motor vehicle line that will be introduced into commerce in the United States on or after April 24, 1986 and that the manufacturer identifies as likely to have a theft rate below the median theft rate; and

(2) Each of those likely submedian theft rate lines.

(c) *Procedures*. (1)(i) For each new line that is to be introduced before the 1997 model year and that a manufacturer identifies under appendix C of part 541 of this chapter as likely to have a theft rate below the median rate, the manufacturer identifies how many and which of the major parts of that line will be interchangeable with the covered major parts of any other of its lines that has been listed in appendix A of part 541 of this chapter or identified by the manufacturer or preliminarily or finally determined by the agency to be a high theft line under § 542.1.

(ii) For each new line that is to be introduced in the 1997 or subsequent model years and that a manufacturer identifies under appendix C of part 541 of this chapter as likely to have a theft rate below the median rate, the manufacturer shall identify how many and which of the major parts of that line will be interchangeable with the covered major parts of any other of its lines that has been listed in appendix A of part 541 of this chapter or identified by the manufacturer or preliminarily or finally determined by the agency to be a high-theft line under § 542.1.

(2)(i) If the manufacturer concludes that a new line that is to be introduced before the 1997 model year has a likely submedian theft rate and will have major parts that are interchangeable with a majority of the covered major parts of a high theft line, the manufacturer determines whether all the vehicles of those lines with likely submedian theft rates and interchangeable parts will account for more than 90 percent of the total annual production of all of the manufacturer's lines with those interchangeable parts.

(ii) If the manufacturer concludes that a new line that is to be introduced for the 1997 or subsequent model years has a likely submedian theft rate and will have major parts that are interchangeable with a majority of the covered major parts of a high theft line, the manufacturer shall determine whether all the vehicles of those lines with likely submedian theft rates and interchangeable parts will account for more than 90 percent of the total annual production of all of the manufacturer's lines with those interchangeable parts.

(3)(i) For new lines to be introduced before the 1997 model year, the manufacturer submits its evaluations and identifications made under paragraphs (c)(1)(i) and (2)(i) of this section, together with the underlying factual information, to NHTSA not less than 18 months before the date of introduction. During this period, the manufacturer may request a meeting with the agency to further explain the bases for its evaluations and conclusions.

(ii) For new lines to be introduced for the 1997 and subsequent model years, the manufacturer shall submit its evaluations and conclusions made under paragraphs (c)(1)(ii) and (2)(ii) of this section, together with the underlying factual information, to NHTSA not less than 15 months before the date of introduction. During this period, the manufacturer may request a meeting with the agency to further explain the bases for its evaluations and conclusions.

(4) Within 90 days after its receipt of the manufacturer's submission under paragraph (c)(3) of this section, the agency considers that submission, if any, and independently makes, on a preliminary basis, the determinations of those lines with likely submedian theft rates which should or should not be subject to §541.5 of this chapter. NHTSA informs the manufacturer by letter of the agency's preliminary determinations, together with the factual information considered by the agency in making them.

(5) The manufacturer may request the agency to reconsider any of its preliminary determinations made under paragraph (c)(4) of this section. The manufacturer must submit its request to the agency within 30 days of its receipt of the letter under paragraph (c)(4) of this section informing it of the agency's evaluations and preliminary determinations. The request must include the facts and arguments underlying the manufacturer's objections to the agency's preliminary determinations. During this 30-day period, the manufacturer may also request a meeting with the agency to discuss those objections.

(6) Each of the agency's preliminary determinations made under paragraph (c)(4) of this section becomes final 45 days after the agency sends the letter specified in that paragraph unless a request for reconsideration has been received in accordance with paragraph (c)(5) of this section. If such a request has been received, the agency makes its final determinations within 60 days of its receipt of the request. NHTSA informs the manufacturer by letter of those determinations and its response to the request for reconsideration.

PART 543—EXEMPTION FROM VEHICLE THEFT PREVENTION STANDARD

Sec.
543.1 Scope.
543.2 Purpose.
543.3 Application.
543.4 Definitions.
543.5 Petition: General requirements.
543.6 Petition: Specific content requirements.
543.7 Processing an exemption petition.
543.8 Duration of exemption.
543.9 Terminating or modifying an exemption.

AUTHORITY: 15 U.S.C. 2025, delegation of authority at 49 CFR 1.50.

SOURCE: 52 FR 33829, Sept. 8, 1987, unless otherwise noted.

§543.1 Scope.

This part establishes procedures under section 605 of the Motor Vehicle Information and Cost Savings Act (15 U.S.C. 2025) for filing and processing petitions to exempt lines of passenger motor vehicles from part 541 of this chapter, and procedures for terminating or modifying an exemption.

§543.2 Purpose.

The purpose of this part is to specify the content and format of petitions which may be filed by manufacturers of passenger motor vehicles to obtain an exemption from the parts-marking requirements of the vehicle theft prevention standard for passenger motor vehicle lines which include, as standard equipment, an antitheft device if the agency concludes that the device is likely to be as effective in reducing and deterring motor vehicle theft as compliance with the parts-marking requirements. This part also provides the procedures that the agency will follow

in processing those petitions and in terminating or modifying exemptions.

§ 543.3 Application.

This part applies to manufacturers of high-theft passenger motor vehicles; and to any interested person who seeks to have NHTSA terminate an exemption.

§ 543.4 Definitions.

(a) *Statutory terms.* All terms defined in sections 2, 601, and 605 of the Motor Vehicle Information and Cost Savings Act are used in accordance with their statutory meanings unless otherwise defined in paragraph (b) of this section.

(b) *Other definitions.*

Line or *car line* means a name which a manufacturer applies to a group of motor vehicles of the same make which have the same body or chassis, or otherwise are similar in construction or design. A ''line'' may, for example, include 2-door, 4-door, station wagon, and hatchback vehicles of the same make.

NHTSA means the National Highway Traffic Safety Administration.

§ 543.5 Petition: General requirements.

(a) For each model year through model year 1996, a manufacturer may petition NHTSA to grant exemptions for up to two additional lines of its passenger motor vehicles from the requirements of part 541 of this chapter. For each of model years 1997 through 2000, a manufacturer may petition NHTSA to grant an exemption for one additional line of its passenger motor vehicles from the requirements of part 541 of this chapter.

(b) Each petition filed under this part for an exemption must—

(1) Be written in the English language;

(2) Be submitted in three copies to: Administrator, National Highway Traffic Safety Administration, 400 Seventh Street, SW., Washington, DC 20590;

(3) State the full name and address of the petitioner, the nature of its organization (individual, partnership, corporation, etc.), and the name of the State or country under the laws of which it is organized;

(4) Be submitted at least 8 months before the commencement of production of the lines specified under paragraph (5) of § 543.5(b) for the first model year in which the petitioner wishes those lines to be exempted, and identify that model year;

(5) Identify the passenger motor vehicle line or lines for which exemption is sought;

(6) Set forth in full the data, views, and arguments of the petitioner supporting the exemption, including the information specified in § 543.6; and

(7) Specify and segregate any part of the information and data submitted which the petitioner requests be withheld from public disclosure in accordance with part 512, *Confidential Business Information,* of this chapter.

[52 FR 33829, Sept. 8, 1987, as amended at 59 FR 10758, Mar. 8, 1994]

§ 543.6 Petition: Specific content requirements.

(a) Each petition for exemption filed under this part must include:

(1) A statement that an antitheft device will be installed as standard equipment on all vehicles in the line for which an exemption is sought;

(2) A list naming each component in the antitheft system, and a diagram showing the location of each of those components within the vehicle;

(3) A discussion that explains the means and process by which the device is activated and functions, including any aspect of the device designed to—

(i) Facilitate or encourage its activation by motorists,

(ii) Attract attention to the efforts of an unauthorized person to enter or move a vehicle by means other than a key,

(iii) Prevent defeating or circumventing the device by an unauthorized person attempting to enter a vehicle by means other than a key,

(iv) Prevent the operation of a vehicle which an unauthorized person has entered using means other than a key, and

(v) Ensure the reliability and durability of the device;

(4) The reasons for the petitioner's belief that the antitheft device will be effective in reducing and deterring motor vehicle theft, including any theft data and other data that are available to the petitioner and form a basis for that belief;

(5) The reasons for the petitioner's belief that the agency should determine that the antitheft device is likely to be as effective as compliance with the parts-marking requirements of part 541 in reducing and deterring motor vehicle theft, including any statistical data that are available to the petitioner and form a basis for petitioner's belief that a line of passenger motor vehicles equipped with the antitheft device is likely to have a theft rate equal to or less than that of passenger motor vehicles of the same, or a similar, line which have parts marked in compliance with part 541.

(b) Any petitioner submitting data under paragraph (a) (4) or (5) of this section shall submit an explanation of its belief that the data are sufficiently representative and reliable to warrant NHTSA's reliance upon them.

[52 FR 33829, Sept. 8, 1987, as amended at 59 FR 10758, Mar. 8, 1994]

§ 543.7 Processing an exemption petition.

(a) NHTSA processes any complete petition. If a manufacturer submits a petition that does not contain all the information required by this part, NHTSA informs the manufacturer of the areas of insufficiency and advises the manufacturer that the agency does not process the petition until it receives the required information.

(b) The agency grants a petition for an exemption from the parts-marking requirements of part 541 either in whole or in part, if it determines that, based upon substantial evidence, the standard equipment antitheft device is likely to be as effective in reducing and deterring motor vehicle theft as compliance with the parts-marking requirements of part 541.

(c) The agency issues its decision either to grant or deny an exemption petition not later than 120 days after the date on which a complete petition is filed.

(d) Any exemption granted under this part applies only to the vehicle line or lines that are the subject of the grant, and are equipped with the antitheft device on which the line's exemption was based.

(e) An exemption granted under this part is effective for the model year beginning after the model year in which NHTSA issue the notice of exemption, unless the notice of exemption specifies a later model year.

(f) NHTSA publishes a notice of its decision to grant or deny an exemption petition in the FEDERAL REGISTER, and notifies the petitioner in writing of the agency's decision.

§ 543.8 Duration of exemption.

Each exemption under this part continues in effect unless it is modified or terminated under § 543.9, or the manufacturer ceases production of the exempted line.

§ 543.9 Terminating or modifying an exemption.

(a) On its own initiative or in response to a petition, NHTSA may commence a proceeding to terminate or modify any exemption granted under this part.

(b) Any interested person may petition the agency to commence a proceeding to terminate or modify an exemption.

(c)(1) In a petition to terminate an exemption, the petitioner must:

(i) Identify the vehicle line or lines that are the subject of the exemption;

(ii) State the reasons for petitioner's belief that the standard equipment antitheft device installed under the exemption is not as effective as compliance with the parts-marking requirements of part 541 in reducing and deterring motor vehicle theft;

(iii) Comply with § 543.5, paragraphs (b) (1) through (3) and (7).

(2) In a petition to modify an exemption, the petitioner must:

(i) Identify the vehicle line or lines that are the subject of the exemption;

(ii) Request permission to use an antitheft device similar to, but different from the standard equipment antitheft device which is installed under the exemption;

(iii) Comply with § 543.5, paragraphs (b) (1) through (3) and (7); and

(iv) Provide the same information for the modified device that is required under § 543.6 for a new device, except that the information specified by § 543.6(a)(3) need by provided only to the extent that the modified device differs from the standard equipment

antitheft device installed under the exemption.

(d) NHTSA processes any complete petition. If a person submits a petition under this section that does not contain all the information required by it, NHTSA informs the manufacturer of the areas of insufficiency and advises the manufacturer that the agency does not process the petition until it receives the required information.

(e) If NHTSA denies a petition requesting a proceeding to terminate or modify an exemption, the agency notifies the petitioner by letter.

(f) If NHTSA commences a termination proceeding on its own initiative or in response to a petition, the agency provides the manufacturer of the exempted line with a copy of the petition, if any, a written statement of NHTSA's reasons for commencing the proceeding, and an opportunity to present its written views.

(g)(1) The agency terminates an exemption if it determines that the antitheft device installed under the exemption has not been as effective as parts-marking in reducing and deterring motor vehicle theft.

(2) Except as provided in paragraph (g)(3) of this section, a decision to terminate an exemption under this section takes effect on the later of the following dates:

(i) The last day of the model year in which NHTSA issues the termination decision, or

(ii) Six months after the manufacturer receives written notice of the termination.

(3) If a manufacturer shows good cause why terminating its exemption effective on a date later than the one specified in paragraph (g)(2) of this section is consistent with the public interest and the purposes of the Act, the agency may set such later date.

(h)(1) The agency modifies an exemption if it detemines, based on substantial evidence, that the modified antitheft device described in the petition is likely to be as effective in reducing and deterring motor vehicle theft as compliance with the parts-marking requirements of part 541.

(2)(i) Except as provided in paragraph (h)(2)(ii) of this section, a decision to modify an exemption under this section takes effect on the first day of the model year following the model year in which NHTSA issued the modification decision.

(ii) If a manufacturer shows good cause why modifying its exemption effective on a date earlier than the one specified in paragraph (h)(2)(i) of this section is consistent with the public interest and the purposes of the Act, the agency may set such earlier date.

(i) [Reserved]

(j) NHTSA publishes notice in the FEDERAL REGISTER of any agency decision terminating or modifying an exemption, and notifies the affected manufacturer in writing.

PART 544—INSURER REPORTING REQUIREMENTS

Sec.
544.1 Scope.
544.2 Purpose.
544.3 Application.
544.4 Definitions.
544.5 General requirements for reports.
544.6 Contents of insurer reports.
544.7 Incorporating previously filed documents.

APPENDIX A TO PART 544—INSURERS OF MOTOR VEHICLE INSURANCE POLICIES SUBJECT TO THE REPORTING REQUIREMENTS IN EACH STATE IN WHICH THEY DO BUSINESS

APPENDIX B TO PART 544—ISSUERS OF MOTOR VEHICLE INSURANCE POLICIES SUBJECT TO THE REPORTING REQUIREMENTS ONLY IN DESIGNATED STATES

APPENDIX C TO PART 544—MOTOR VEHICLE RENTAL AND LEASING COMPANIES (INCLUDING LICENSEES AND FRANCHISEES) SUBJECT TO THE REPORTING REQUIREMENTS OF PART 544

AUTHORITY: 49 U.S.C. 33112; delegation of authority at 49 CFR 1.50.

SOURCE: 52 FR 76, Jan. 2, 1987, unless otherwise noted.

§ 544.1 Scope.

This part sets forth requirements for insurers to report to the National Highway Traffic Safety Administration information about motor vehicle thefts and recoveries, the effects of the Federal motor vehicle theft prevention standard on those thefts and recoveries, and related insurance practices.

§ 544.2 Purpose.

The purpose of these reporting requirements in this part is to aid in implementing and evaluating the provisions of 49 U.S.C. Chapter 331 Theft Prevention to prevent or discourage the theft of motor vehicles, to prevent or discourage the sale or distribution in interstate commerce of used parts removed from stolen motor vehicles, and to help reduce the cost to consumers of comprehensive insurance coverage for motor vehicles.

[62 FR 33756, June 23, 1997]

§ 544.3 Application.

This part applies to the motor vehicle insurance policy issuers listed in appendices A or B, and to the motor vehicle rental and leasing companies listed in appendix C.

[55 FR 25609, June 22, 1990]

§ 544.4 Definitions.

(a) *Statutory terms.* All terms defined in 49 U.S.C. 33101 and 33112 are used in accordance with their statutory meanings unless otherwise defined in paragraph (b) of this section.

(b) *Other definitions.* (1) *Comprehensive insurance coverage* means the indemnification of motor vehicle owners by an insurer against losses due to fire, theft, robbery, pilferage, malicious mischief and vandalism, and damage resulting from floods, water, tornadoes, cyclones, or windstorms.

(2) *Gross vehicle weight rating* is used as defined at § 571.3 of this chapter.

(3) *Heavy truck* means a truck with a gross vehicle weight rating of more than 10,000 pounds.

(4) *Light truck* means a truck with a gross vehicle weight rating of 10,000 pounds or less.

(5) *Major part* means—

(i) In the case of passenger motor vehicles, any part listed in § 541.5(a) (1) through (14) of this chapter;

(ii) In the case of light trucks, any part listed in § 541.4(a) (1) through (14) of this chapter, or the cargo bed or transfer case;

(iii) In the case of heavy trucks, any part listed in § 541.5(a) (1) through (14) of this chapter, or the cargo bed, drive axle assembly, fifth wheel, sleeper, or the transfer case;

(iv) In the case of multipurpose passenger vehicles, any part listed in § 541.5(a) (1) through (14) of this chapter, or the cargo bed or transfer case; and

(v) In the case of motorcycles, the crankcase, engine, frame, front fork, or transmission.

(6) *Motorcycle* is used as defined at § 571.3 of this chapter.

(7) *Motorcycle vehicle* means a passenger motor vehicle, multipurpose passenger vehicle, truck, or motorcycle.

(8) *Multipurpose passenger vehicle* is used as defined at § 571.3 of this chapter.

(9) *Recovery* means regaining physical possession of a motor vehicle or a major portion of the superstructure of a motor vehicle with one or more major parts still attached to the superstructure, after that vehicle has been stolen.

(10) *Recovery-in-part* means a recovery in which one or more of the recovered vehicle's major parts is missing at the time of recovery.

(11) *Recovery intact* means a recovery with none of the recovered vehicle's major parts missing at the time of recovery, and with no apparent damage to any part of the motor vehicle other than those parts damaged in order to enter, start, and operate the vehicle, but with additional mileage and ordinary wear and tear.

(12) *Recovery-in-whole* means a recovery with none of the recovered vehicle's major parts missing at the time of recovery, but with apparent damage to some part or parts of the vehicle in addition to those parts damaged in order to enter, start, and operate the vehicle.

(13) *Reporting period* means the calendar year covered by a report submitted under this part.

(14) *Truck* is used as defined at §571.3 of this chapter.

(15)(i) In the case of insurers that issue motor vehicle insurance policies, *vehicle theft* means an actual physical removal of a motor vehicle without the permission of its owner, but does not include the removal of component parts, accessories, or personal belongings from a motor vehicle which is not moved.

(ii) In the case of an insurer which has a fleet of 20 or more vehicles (other than a governmental entity) used primarily for rental or lease and not covered by theft insurance policies issued by insurers of motor vehicles, ''vehicle theft'' means an actual physical removal of a motor vehicle without the permission of its owner, or keeping possession of the motor vehicle without permission of its owner for a sufficient period of time so that the vehicle could have been reported as stolen to the State police in the State in which the vehicle was to have been returned. However, vehicle theft does not include the removal of component parts, accessories, or personal belongings from a motor vehicle which is not moved.

[52 FR 76, Jan. 2, 1987, as amended at 60 FR 33148, June 27, 1995; 61 FR 41987, Aug. 13, 1996; 62 FR 33756, June 23, 1997]

§ 544.5 General requirements for reports.

(a) Each insurer to which this part applies shall submit a report annually before October 25, beginning on October 25, 1986. This report shall contain the information required by § 544.6 of this part for the calendar year 3 years previous to the year in which the report is filed (e.g., the report due by October 25, 2002 will contain the required information for the 1999 calendar year).

(b) Each report required by this part must:

(1) Have a heading preceding its text that includes the words ''Insurer Report'';

(2) Identify the insurer, including all subsidiary companies, on whose behalf the report is submitted, and the designated agent, if any, submitting the report or that will submit further documents to complete the report;

(3) Identify the State or States in which the insurer did business during the reporting period;

(4) State the full name and title of the official responsible for preparing the report, and the address of the insurer;

(5) Identify the reporting period covered by the report;

(6) Be written in the English language;

(7) Include a glossary defining all acronyms and terms of art used in the report, unless those acronyms and terms of art are defined immediately after they first appear in the report;

(8) Be submitted in three copies to: Administrator, National Highway Traffic Safety Administration, 400 Seventh Street, SW., Washington, DC 20590; and

(9) If the insurer wishes to submit certain information under a claim of confidentiality, be submitted in accordance with part 512 of this chapter.

[52 FR 76, Jan. 2, 1987, 60 FR 33149, June 27, 1995, as amended at 61 FR 41987, Aug. 13, 1996; 62 FR 33756, June 23, 1997; 63 FR 70053, Dec. 18, 1998; 65 FR 49507, Aug. 14, 2000; 66 FR 53733, Oct. 24, 2001; 67 FR 46611, July 16, 2002]

§ 544.6 Contents of insurer reports.

(a)(1) In the case of insurers that issue motor vehicle insurance policies, provide the information specified in paragraphs (b) through (g) of this section for each State in which the insurer, including any subsidiary, did business during the reporting period if the insurer is listed in appendix A, or for each State listed after the insurer's name if the insurer is listed in appendix B.

(2) In the case of a motor vehicle rental or leasing company listed in appendix C, provide the information specified in paragraphs (c), (d)(2)(iv), and (g) of this section for each vehicle type listed in paragraph (b) of this section, for each State in which the company, including any licensee, franchisee, or subsidiary, did business during the reporting period. The information for each listed company shall include all relevant information from any licensee, franchisee, or subsidiary.

(b) For each of the following vehicle types, provide the information specified in paragraphs (c) through (g) of this section for all vehicles of that type insured by the insurer during the reporting period—

(1) Passenger cars.

(2) Multipurpose passenger vehicles.

(3) Light trucks.

(4) Heavy trucks.

(5) Motorcycles.

(c)(1) List the total number of vehicle thefts for vehicles manufactured in the 1983 or subsequent model years, subdivided into model year, model, make, and line, for this type of motor vehicle.

(2) List the total number of recoveries for vehicles manufactured in the 1983 or subsequent model years, subdivided into model year, model, make, and line, for this type of motor vehicle. Beginning with the report due not later than October 25, 1987, for each of these subdivided number of recoveries, indicate how many were:

(i) Recoveries intact;

(ii) Recoveries-in-whole; and

(iii) Recoveries-in-part.

(3) Explain how the theft and recovery data set forth in response to paragraphs (c) (1) and (2) of this section were obtained by the insurer, and the steps taken by the insurer to ensure that these data are accurate and timely.

(4) Explain the use made by the insurer of the information set forth in response to paragraphs (c) (1) and (2) of this section, including the extent to which such information is reported to national, public, and private entities (e.g., the Federal Bureau of Investigation and State and local police). If such reports are made, state the frequency and timing of the reporting.

(d)(1) Provide the rating characteristics used by the insurer to establish the premiums it charges for comprehensive insurance coverage for this type of motor vehicle and the premium penalties for vehicles of this type considered by the insurer as more likely to be stolen. This requirement may be satisfied by furnishing the pertinent sections of the insurer's rate manual(s).

(2) Provide the loss data used by the insurer to establish the premiums it charges for comprehensive insurance coverage for this type of motor vehicle and the premium penalties it charges for vehicles of this type it considers as more likely to be stolen. This requirement may be satisfied by providing the following:

(i) The total number of comprehensive insurance claims paid by the insurer during the reporting period;

(ii)(A) The total number of claims listed in (d)(2)(i) of this section that arose from a theft;

(B) The insurer's best estimate of the percentage of the number listed in paragraph (d)(2)(ii)(A) of this section that arose from vehicle thefts, and an explanation of the basis for the estimate;

(iii) The total amount (in dollars) paid out by the insurer during the reporting period in response to all the comprehensive claims filed by its policyholders;

(iv)(A) In the case of insurers listed in appendix A or B, provide—

(*1*) The total amount (in dollars) listed under paragraph (d)(2)(iii) of this section paid out by the insurer as a result of theft; and

(*2*) The insurer's best estimate of the percentage of the dollar total listed in paragraph (d)(2)(iv)(A)(1) of this section that arose from vehicle thefts, and an explanation of the basis for the estimate;

(B) In the case of other insurers subject to this part, the net losses suffered by the insurer (in dollars) as a result of vehicle theft;

(v)(A) The total amount (in dollars) recovered by the insurer from the sale of recovered vehicles, major parts recovered not attached to the vehicle superstructure, or other recovered parts, after the insurer had made a payment listed under paragraph (d)(2)(iv) of this section.

(B) The insurer's best estimate of the percentage of the dollar total listed in paragraph (d)(2)(v)(A) of this section that arose from vehicle thefts, and an explanation of the basis for the estimate;

(vi) An identification of the vehicles for which the insurer charges comprehensive insurance premium penalties, because the insurer considers such vehicles as more likely to be stolen;

(vii) The total number of comprehensive insurance claims paid by the insurer for each vehicle risk grouping identified in paragraph (d)(2)(vi) of this section during the reporting period, and the total amount (in dollars) paid out by the insurer in response to each of the listed claims totals; and

(viii) The maximum premium adjustments (as a percentage of the basic comprehensive insurance premium) made for each vehicle risk grouping identified in paragraph (d)(2)(vi) of this section during the reporting period, as a result of the insurer's determination

that such vehicles are more likely to be stolen.

(3) Identify any other rating rules and plans used by the insurer to establish its comprehensive insurance premiums and premium penalties for motor vehicles it considers as more likely to be stolen, and explain how such rating rules and plans are used to establish the premiums and premium penalties.

(4) Explain the basis for the insurer's comprehensive insurance premiums and the premium penalties charged for motor vehicles it considers as more likely to be stolen. This requirement may be satisfied by providing the pertinent sections of materials filed with State insurance regulatory officials and clearly indicating which information in those sections is being submitted in compliance with this paragraph.

(e) List each action taken by the insurer to reduce the premiums it charges for comprehensive insurance coverage because of a reduction in thefts of this type of motor vehicle. For each action:

(1) State the conditions that must be satisfied to receive such a reduction (e.g., installation of antitheft device, marking of vehicle in accordance with theft prevention standard, etc.);

(2) State the number of the insurer's policyholders and the total number of vehicles insured by the insurer that received this reduction; and

(3) State the difference in average comprehensive insurance premiums for those policyholders that received this reduction versus those policyholders that did not receive the reduction.

(f) In the case of an insurer that offered a reduction in its comprehensive insurance premiums for vehicles equipped with antitheft devices, provide:

(1) The specific criteria used by the insurer to determine whether a vehicle is eligible for the reduction (original equipment antitheft device, passive antitheft device, etc.);

(2) The total number of vehicle thefts for vehicles manufactured in the 1983 or subsequent model years that received a reduction under each listed criterion; and

(3) The total number of recoveries of vehicles manufactured in the 1983 or subsequent model years that received a reduction under each listed criterion. Beginning with the report due not later than October 25, 1987, indicate how many of the total number of recoveries were—

(i) Recoveries intact;

(ii) Recoveries-in-whole; and

(iii) Recoveries-in-part.

(g)(1) List each action taken by the insurer to assist in deterring or reducing thefts of motor vehicles. For each action, describe the action and explain why the insurer believed it would be effective in deterring or reducing motor vehicle thefts.

(2)(i) State the insurer's policy regarding the use of used parts to effect repairs paid for by the insurer on vehicles it insures. Indicate whether the insurer required, promoted, allowed, or forbade the use of used parts in those repairs.

(ii) In the case of insurers requiring, promoting, or allowing the use of used parts to make repairs paid for by the insurer on vehicles it insures, indicate the precautions taken by or on behalf of the insurer to identify the origin of those used parts.

[52 FR 76, Jan. 2, 1987, as amended at 55 FR 25610, June 22, 1990]

§ 544.7 Incorporating previously filed documents.

(a) In any report required by this part, an insurer may incorporate by reference any document or portion thereof previously filed with any Federal or State agency or department within the past four years.

(b) An insurer that incorporates by reference a document not previously submitted to the National Highway Traffic Safety Administration shall append that document or the pertinent sections of that document to its report, and clearly indicate on the cover or first page of the document or pertinent section the regulatory requirement in response to which the document is being submitted.

(c) An insurer that incorporates by reference a document shall clearly identify the document and the specific portions thereof sought to be incorporated, and, in the case of a document

previously submitted to the National Highway Traffic Safety Administration, indicate the date on which the document was submitted to the agency and the person whose signature appeared on the document.

APPENDIX A TO PART 544—INSURERS OF MOTOR VEHICLE INSURANCE POLICIES SUBJECT TO THE REPORTING REQUIREMENTS IN EACH STATE IN WHICH THEY DO BUSINESS

Allstate Insurance Group
American Family Insurance Group
American International Group
California State Auto Association
CGU Group
CNA Insurance Companies
Erie Insurance Group
Farmers Insurance Group
Berkshire Hathaway/GEICO Corporation Group
Great American P & C Group[1]
Hartford Insurance Group
Liberty Mutual Insurance Companies
Metropolitan Life Auto & Home Group[1]
Nationwide Group
Progressive Group
SAFECO Insurance Companies
St. Paul Companies
State Farm Group
Travelers PC Group
USAA Group

[67 FR 46611, July 16, 2002]

APPENDIX B—ISSUERS OF MOTOR VEHICLE INSURANCE POLICIES SUBJECT TO THE REPORTING REQUIREMENTS ONLY IN DESIGNATED STATES

Alfa Insurance Group (Alabama)
Arbella Mutual Insurance (Massachusetts)
Auto Club of Michigan Group (Michigan)
Commerce Group, Inc. (Massachusetts)
Kentucky Farm Bureau Group (Kentucky)
New Jersey Manufacturers Group (New Jersey)
Southern Farm Bureau Group (Arkansas, Mississippi)
Tennessee Farmers Companies (Tennessee)

[67 FR 46611, July 16, 2002]

APPENDIX C—MOTOR VEHICLE RENTAL AND LEASING COMPANIES (INCLUDING LICENSEES AND FRANCHISEES) SUBJECT TO THE REPORTING REQUIREMENTS OF PART 544

Alamo Rent-A-Car, Inc.
ARI (Automotive Resources International)
Associates Leasing Inc.
Avis, Rent-A-Car, Inc.
Budget Rent-A-Car Corporation
Consolidated Service Corporation
Dollar Rent-A-Car Systems, Inc.
Donlen Corporation
Enterprise Rent-A-Car
Ford Rent-A-Car System[1]
GE Capital Fleet Services
Hertz Rent-A-Car Division (subsidiary of The Hertz Corporation)
Lease Plan USA, Inc.
National Car Rental System, Inc.
PHH Vehicle Management Services
U-Haul International, Inc. (Subsidiary of AMERCO)
Wheels Inc.

[67 FR 46611, July 16, 2002]

PART 551—PROCEDURAL RULES

Subpart A—General

Sec.
551.1 Scope.

Subpart B [Reserved]

Subpart C—Submittals in Writing

551.31 Form of communications.
551.33 Address of communications.
551.35 Subscription of communications.
551.37 Language of communications.

Subpart D—Service of Process; Agents

551.45 Service of process on foreign manufacturers and importers.

AUTHORITY: Secs. 110(e), 119, 80 Stat. 719, 728 (15 U.S.C. 1399, 1407); 23 U.S.C. 315, 401–404; delegation of authority, 31 FR 13952, 32 FR 5606.

SOURCE: 33 FR 19700, Dec. 25, 1968, unless otherwise noted. Redesignated at 35 FR 5118, Mar. 26, 1970.

Subpart A—General

§ 551.1 Scope.

This part contains rules of procedure generally applicable to the transaction of official business under the National Traffic and Motor Vehicle Safety Act of 1966, the Motor Vehicle Information and Cost Savings Act, and the Highway Safety Act of 1966. These rules apply in addition to the rules governing specific proceedings. In case of inconsistency

[1] Indicates a newly listed company which must file a report beginning with the report due October 25, 2002.

with these general rules, the specific rules prevail.

[33 FR 19700, Dec. 25, 1968. Redesignated at 35 FR 5118, Mar. 26, 1970, and amended at 38 FR 20086, July 27, 1973]

Subpart B [Reserved]

Subpart C—Submittals in Writing

§ 551.31 Form of communications.

Any communication in writing relating to official business (including formal documents) shall be on opaque and durable paper not larger than 9 by 14 inches in size. Tables, charts, or originals of other documents that are attached to communications shall be folded to this size, if possible. The left margin of communications shall be at least 1½ inches wide, and if a communication is bound, it shall be bound on the left side. All copies submitted shall be legible.

§ 551.33 Address of communications.

Unless otherwise specified, communications shall be addressed to the Administrator, National Highway Traffic Safety Administration, U.S. Department of Transportation, 400 Seventh Street SW., Washington, DC 20590. Communications may not be addressed to a staff member's private address.

[36 FR 1147, Jan. 23, 1971; 38 FR 20086, July 27, 1973]

§ 551.35 Subscription of communications.

Each communication shall be signed in ink and shall disclose the full legal name and the address of the person signing it and, if he is an agent, of his principal.

§ 551.37 Language of communications.

Communications and attachments thereto shall be in English. Any matter written in a foreign language will be considered only if accompanied by a translation into English. A translation shall bear a certificate by the translator certifying that he is qualified to make the translation; that the translation is complete except as otherwise clearly indicated; and that it is accurate to the best of the translator's knowledge and belief. The translator shall sign the certificate in ink and state his full legal name, occupation, and address.

Subpart D—Service of Process; Agents

§ 551.45 Service of process on foreign manufacturers and importers.

(a) *Designation of agent for service.* Any manufacturer, assembler, or importer of motor vehicles or motor vehicle equipment (hereinafter called manufacturer) before offering a motor vehicle or item of motor vehicle equipment for importation into the United States, shall designate a permanent resident of the United States as his agent upon whom service of all processes, notices, orders, decisions, and requirements may be made for him and on his behalf as provided in section 110(e) of the National Traffic and Motor Vehicle Safety Act of 1966 (80 Stat. 718) and in this section. The agent may be an individual, a firm, or a domestic corporation. Any number of manufacturers may designate the same person as agent.

(b) *Form and contents of designation.* The designation shall be addressed to the Administrator, National Highway Traffic Safety Administration, U.S. Department of Transportation, 400 Seventh Street SW., Washington, DC 20590. It shall be in writing and dated; all signatures shall be in ink. The designation shall be made in legal form required to make it valid, and binding on the manufacturer, under the laws, corporate bylaws, or other requirements governing the making of the designation by the manufacturer at the place and time where it is made, and the person or persons signing the designation shall certify that it is so made. The designation shall disclose the full legal name, principal place of business, and mailing address of the manufacturer. If any of the products of the manufacturer do not bear his legal name, the marks, trade names, or other designations of origin which these products bear shall be stated in the designation. The designation of agent shall provide that it remains in effect until withdrawn or replaced by the manufacturer. The designation shall bear a declaration of acceptance duly signed by

the designated agent. The full legal name and mailing address of the agent shall be stated. Designations are binding on the manufacturer even when not in compliance with all the requirements of this section, until rejected by the Administrator. The designated agent may not assign performance of his functions under the designation to another person.

(c) *Method of service.* Service of any process, notice, order, requirement, or decision specified in section 110(e) of the National Traffic and Motor Vehicle Safety Act of 1966 may be made by registered or certified mail addressed to the agent, with return receipt requested, or in any other manner authorized by law. If service cannot be effected because the agent has died (or, if a firm or a corporation ceased to exist) or moved, or otherwise does not receive correctly addressed mail, service may be made by posting as provided in section 110(e).

[33 FR 19700, Dec. 25, 1968. Redesignated and amended at 35 FR 5118, Mar. 26, 1970; 36 FR 1147, Jan. 23, 1971; 48 FR 44081, Sept. 27, 1983]

PART 552—PETITIONS FOR RULEMAKING, DEFECT, AND NONCOMPLIANCE ORDERS

Subpart A—General

Sec.
552.1 Scope.
552.2 Purpose.
552.3 General.
552.4 Requirements for petition.
552.5 Improperly filed petitions.
552.6 Technical review.
552.7 Public meeting.
552.8 Notification of agency action on the petition.
552.9 Grant of petition.
552.10 Denial of petition.

Subpart B—Petitions for Expedited Rulemaking to Establish Dynamic Automatic Suppression System Test Procedures for Federal Motor Vehicle Safety Standard No. 208, Occupant Crash Protection

552.11 Application.
552.12 Definitions.
552.13 Form of petition.
552.14 Content of petition.
552.15 Processing of petition.

AUTHORITY: 49 U.S.C. 30111, 30118, 30162; delegation of authority at 49 CFR 1.50.

SOURCE: 40 FR 42014, Sept. 10, 1975, unless otherwise noted.

Subpart A—General

§ 552.1 Scope.

This part establishes procedures for the submission and disposition of petitions filed by interested persons pursuant to 49 U.S.C. Chapters 301, 305, 321, 323, 325, 327, 329 and 331 to initiate rulemaking or to make a decision that a motor vehicle or item of replacement equipment does not comply with an applicable Federal motor vehicle safety standard or contains a defect which relates to motor vehicle safety.

[60 FR 17267, Apr. 5, 1995]

§ 552.2 Purpose.

The purpose of this part is to enable the National Highway Traffic Safety Administration to identify and respond on a timely basis to petitions for rulemaking or defect or noncompliance decisions, and to inform the public of the procedures following in response to such petitions.

[60 FR 17267, Apr. 5, 1995]

§ 552.3 General.

Any interested person may file with the Administrator a petition requesting him:

(a) To commence a proceeding respecting the issuance, amendment or revocation of a motor vehicle safety standard, or

(b) To commence a proceeding to decide whether to issue an order concerning the notification and remedy of a failure of a motor vehicle or item of replacement equipment to comply with an applicable motor vehicle safety standard or a defect in such vehicle or equipment that relates to motor vehicle safety.

[60 FR 17267, Apr. 5, 1995]

§ 552.4 Requirements for petition.

A petition filed under this part should be addressed and submitted to: Administrator, National Highway Traffic Safety Administration, 400 Seventh Street, S.W., Washington, DC 20590. Each petition filed under this part must:

(a) Be written in the English language;

(b) Have, preceding its text, a heading that includes the word ''Petition'';

(c) Set forth facts which it is claimed establish that an order is necessary;

(d) Set forth a brief description of the substance of the order which it is claimed should be issued; and

(e) Contain the name and address of the petitioner.

§ 552.5 Improperly filed petitions.

(a) A petition that is not addressed as specified in § 552.4, but that meets the other requirements of that section, will be treated as a properly filed petition, received as of the time it is discovered and identified.

(b) A document that fails to conform to one or more of the requirements of § 552.4(a) through (e) will not be treated as a petition under this part. Such a document will be treated according to the existing correspondence or other appropriate procedures of the NHTSA, and any suggestions contained in it will be considered at the discretion of the Administrator or his delegate.

§ 552.6 Technical review.

The appropriate Associate Administrator conducts a technical review of the petition. The technical review may consist of an analysis of the material submitted, together with information already in the possession of the agency. It may also include the collection of additional information, or a public meeting in accordance with § 552.7.

[60 FR 17267, Apr. 5, 1995]

§ 552.7 Public meeting.

If the Associate Administrator decides that a public meeting on the subject of the petition would contribute to the determination whether to commence a proceeding, he issues a notice of public meeting for publication in the FEDERAL REGISTER to advise interested persons of the time, place, and subject matter of the public meeting and invite their participation. Interested persons may submit their views and evidence through oral or written presentations, or both. There is no cross examination of witnesses. A transcript of the meeting is kept and exhibits may be accepted as part of the transcript. Sections 556 and 557 of title 5, U.S.C., do not apply to meetings held under this part. The Chief Counsel designates a member of his staff to serve as legal officer at the meeting.

§ 552.8 Notification of agency action on the petition.

After considering the technical review conducted under § 552.6, and taking into account appropriate factors, which may include, among others, allocation of agency resources, agency priorities and the likelihood of success in litigation which might arise from the order, the Administrator will grant or deny the petition. NHTSA will notify the petitioner of the decision to grant or deny the petition within 120 days after its receipt of the petition.

[60 FR 17267, Apr. 5, 1995]

§ 552.9 Grant of petition.

(a) If a petition for rulemaking with respect to a motor vehicle safety standard is granted, a rulemaking proceeding is promptly commenced in accordance with applicable NHTSA and statutory procedures. The granting of such a petition and the commencement of a rulemaking proceeding does not signify, however, that the rule in question will be issued. A decision as to the issuance of the rule is made on the basis of all available information developed in the course of the rulemaking proceeding, in accordance with statutory criteria.

(b) If a petition with respect to a noncompliance or a defect is granted, a proceeding to determine the existence of the noncompliance or defect is promptly commenced by the initiation of an investigation by the Office of Standards Enforcement or the Office of Defects Investigation, as appropriate.

§ 552.10 Denial of petition.

If a petition is denied, a FEDERAL REGISTER notice of the denial is issued within 45 days of the denial, setting forth the reasons for denial of the petition.

Subpart B—Petitions for Expedited Rulemaking to Establish Dynamic Automatic Suppression System Test Procedures for Federal Motor Vehicle Safety Standard No. 208, Occupant Crash Protection

SOURCE: 65 FR 30744, May 12, 2000, unless otherwise noted.

§ 552.11 Application.

This subpart establishes procedures for the submission and disposition of petitions filed by interested parties to initiate rulemaking to add a test procedure to 49 CFR 571.208, S28.

§ 552.12 Definitions.

For purposes of this subpart, the following definitions apply:

(a) *Dynamic automatic suppression system (DASS)* means a portion of an air bag system that automatically controls whether or not the air bag deploys during a crash by:

(1) Sensing the location of an occupant, moving or still, in relation to the air bag;

(2) Interpreting the occupant characteristics and location information to determine whether or not the air bag should deploy; and

(3) Activating or suppressing the air bag system based on the interpretation of characteristics and occupant location information.

(b) *Automatic suppression zone (ASZ)* means a three-dimensional zone adjacent to the air bag cover, specified by the vehicle manufacturer, where air bag deployment will be suppressed by the DASS if a vehicle occupant enters the zone under specified conditions.

(c) *Standard No. 208* means 49 CFR 571.208.

§ 552.13 Form of petition.

Each petition filed under this subpart shall—

(a) Be submitted to: Administrator, National Highway Traffic Safety Administration, 400 Seventh Street, S.W., Washington, DC 20590.

(b) Be written in the English language.

(c) State the name and address of the petitioner.

(d) Set forth in full the data, views and arguments of the petitioner supporting the requested test procedure, including all of the content information specified by § 552.14. Any documents incorporated by reference in the procedure shall be submitted with the petition.

(e) Specify and segregate any part of the information and data submitted that the petitioner wishes to have withheld from public disclosure in accordance with Part 512 of this chapter including, if requested, the name and address of the petitioner.

(f) Not request confidential treatment for the requested test procedure and, to the extent confidential treatment is requested concerning a particular DASS or data and analysis submitted in support of the petition, provide a general non-confidential description of the operation of the DASS and of the data and analysis supporting the petition.

(g) Set forth a requested effective date and be submitted at least nine months before that date.

§ 552.14 Content of petition.

The petitioner shall provide the following information:

(a) A set of proposed test procedures for S28.1, S28.2, S28.3, and S28.4 of Standard No. 208 which the petitioner believes are appropriate for assessing a particular DASS.

(1) For S28.1 of Standard No. 208, the petitioner shall specify at least one specific position for the Part 572, subpart O 5th percentile female dummy that is:

(i) Outside but adjacent to the ASZ, and

(ii) Representative of an unbelted occupant position that is likely to occur during a frontal crash.

(2) For S28.2 of Standard No. 208, the petitioner shall specify at least one specific position for the Part 572 Subpart P 3-year-old child dummy and at least one specific position for the Part 572 Subpart N 6-year-old child dummy that are:

(i) Outside but adjacent to the ASZ, and

(ii) Representative of unbelted occupant positions that are likely to occur

during a frontal crash where pre-crash braking occurs.

(3) For S28.3 of Standard No. 208, the petitioner shall specify a procedure which tests the operation of the DASS by moving a test device toward the driver air bag in a manner that simulates the motion of an unbelted occupant during pre-crash braking or other pre-crash maneuver. The petitioner shall include a complete description, including drawings and instrumentation, of the test device employed in the proposed test. The petitioner shall include in the procedure a means for determining whether the driver air bag was suppressed before any portion of the specified test device entered the ASZ during the test. The procedure shall also include a means of determining when the specified test device occupies the ASZ.

(4) For S28.4 of Standard No. 208, the petitioner shall specify a procedure which tests the operation of the DASS by moving a test device toward the passenger air bag in a manner that simulates the motion of an unbelted occupant during pre-crash braking or other pre-crash maneuver. The petitioner shall include a complete description, including drawings and instrumentation, of the test device employed in the proposed test. The petitioner shall include in the procedure a means for determining whether the passenger air bag was suppressed before any portion of the specified test device entered the ASZ during the test. The procedure shall also include a means of determining when the specified test device occupies the ASZ.

(b) A complete description and explanation of the particular DASS that the petitioner believes will be appropriately assessed by the recommended test procedures. This shall include:

(1) A description of the logic used by the DASS in determining whether to suppress the air bag or allow it to deploy. Such description shall include flow charts or similar materials outlining the operation of the system logic, the system reaction time, the time duration used to evaluate whether the air bag should be suppressed or deployed, changes, if any, in system performance based on the size of an occupant and vehicle speed, and a description of the size and shape of the zone where under similar circumstances and conditions the DASS may either allow or suppress deployment. Such description shall also address whether and how the DASS discriminates between an occupant's torso or head entering the ASZ as compared to an occupant's hand or arm, and whether and how the DASS discriminates between an occupant entering the ASZ and an inanimate object such as a newspaper or ball entering the ASZ.

(2) Detailed specifications for the size and shape of the ASZ, including whether the suppression zone is designed to change size or shape depending on the vehicle speed, occupant size, or other factors.

(c) Analysis and data supporting the appropriateness, repeatability, reproducibility and practicability of each of the proposed test procedures.

(1) For the procedures proposed for inclusion in S28.1 and S28.2 of Standard No. 208, the petitioner shall provide the basis for the proposed dummy positions, including but not limited to, why the positions are representative of what is likely to occur in real world crashes.

(2) For the procedures proposed for inclusion in S28.3 and S28.4 of Standard No. 208, the petitioner shall provide:

(i) A complete explanation of the means used in the proposed test to ascertain whether the air bag is suppressed or activated during the test.

(ii) A complete description of the means used to evaluate the ability of the DASS to detect and respond to an occupant moving toward an air bag, including the method used to move a test device toward an air bag at speeds representative of occupant movement during pre-crash braking or other pre-crash maneuver.

(iii) The procedure used for locating the test device inside a test vehicle in preparation for testing, including an accounting of the reference points used to specify such location.

(iv) An explanation of the methods used to measure the amount of time needed by a suppression system to suppress an air bag once a suppression triggering event occurs.

(v) High speed film or video of at least two tests of the DASS using the proposed test procedure.

(vi) Data generated from not less than two tests of the DASS using the proposed test procedure, including an account of the data streams monitored during testing and complete samples of these data streams from not less than two tests performed under the proposed procedure.

(d) Analysis concerning the variety of potential DASS designs for which the requested test procedure is appropriate; e.g., whether the test procedures are appropriate only for the specific DASS design contemplated by the petitioner, for all DASS designs incorporating the same technologies, or for all DASS designs.

§ 552.15 Processing of petition.

(a) NHTSA will process any petition that contains the information specified by this subpart. If a petition fails to provide any of the information, NHTSA will not process the petition but will advise the petitioner of the information that shall be provided if the agency is to process the petition. The agency will seek to notify the petitioner of any such deficiency within 30 days after receipt of the petition.

(b) At any time during the agency's consideration of a petition submitted under this Part, the Administrator may request the petitioner to provide additional supporting information and data and/or provide a demonstration of any of the requested test procedures. The agency will seek to make any such request within 60 days after receipt of the petition. Such demonstration may be at either an agency designated facility or one chosen by the petitioner, provided that, in either case, the facility shall be located in North America. If such a request is not honored to the satisfaction of the agency, the petition will not receive further consideration until the requested information is submitted.

(c) The agency will publish in the FEDERAL REGISTER either a Notice of Proposed Rulemaking proposing adoption of the requested test procedures, possibly with changes and/or additions, or a notice denying the petition. The agency will seek to issue either notice within 120 days after receipt of a complete petition. However, this time period may be extended by any time period during which the agency is awaiting additional information it requests from the petitioner or is awaiting a requested demonstration. The agency contemplates a 30 to 60 day comment period for any Notice of Proposed Rulemaking, and will endeavor to issue a final rule within 60 days thereafter.

PART 553—RULEMAKING PROCEDURES

Subpart A—General

Sec.
553.1 Applicability.
553.3 Definitions.
553.5 Regulatory docket.
553.7 Records.

Subpart B—Procedures for Adoption of Rules

553.11 Initiation of rulemaking.
553.13 Notice of proposed rulemaking.
553.15 Contents of notices of proposed rulemaking.
553.17 Participation of interested persons.
553.19 Petitions for extension of time to comment.
553.21 Contents of written comments.
553.23 Consideration of comments received.
553.25 Additional rulemaking proceedings.
553.27 Hearings.
553.29 Adoption of final rules.
553.31–553.33 [Reserved]
553.35 Petitions for reconsideration.
553.37 Proceedings on petitions for reconsideration.
553.39 Effect of petition for reconsideration on time for seeking judicial review.
APPENDIX A TO PART 553—STATEMENT OF POLICY: ACTION ON PETITIONS FOR RECONSIDERATION
APPENDIX B TO PART 553—STATEMENT OF POLICY: RULEMAKINGS INVOLVING THE ASSESSMENT OF THE FUNCTIONAL EQUIVALENCE OF SAFETY STANDARDS
APPENDIX C TO PART 553—STATEMENT OF POLICY: IMPLEMENTATION OF THE UNITED NATIONS/ECONOMIC COMMISSION FOR EUROPE (UN/ECE) 1998 AGREEMENT ON GLOBAL TECHNICAL REGULATIONS—AGENCY POLICY GOALS AND PUBLIC PARTICIPATION

AUTHORITY: 49 U.S.C. 322, 1657, 30103, 30122, 30124, 30125, 30127, 30146, 30162, 32303, 32502, 32504, 32505, 32705, 32901, 32902, 33102, 33103, and 33107; delegation of authority at 49 CFR 1.50.

SOURCE: 60 FR 62222, Dec. 5, 1995, unless otherwise noted.

Subpart A—General

§ 553.1 Applicability.

This part prescribes rulemaking procedures that apply to the issuance, amendment, and revocation of rules pursuant to Title 49, Subtitle VI of the United States Code (49 U.S.C. 30101, *et seq.*).

§ 553.3 Definitions.

Administrator means the Administrator of the National Highway Traffic Safety Administration or a person to whom he has delegated final authority in the matter concerned.

Rule includes any order, regulation, or Federal motor vehicle safety standard issued under Title 49.

Title 49 means 49 U.S.C. 30101, *et seq.*

§ 553.5 Regulatory docket.

(a) Information and data deemed relevant by the Administrator relating to rulemaking actions, including notices of proposed rulemaking; comments received in response to notices; petitions for rulemaking and reconsideration; denials of petitions for rulemaking and reconsideration; records of additional rulemaking proceedings under § 553.25; and final rules are maintained in the Docket Room, National Highway Traffic Safety Administration, 400 Seventh Street SW., Washington, DC 20590.

(b) Any person may examine any docketed material at the Docket Room at any time during regular business hours after the docket is established, except material ordered withheld from the public under applicable provisions of Title 49 and section 552(b) of title 5 of the U.S.C., and may obtain a copy of it upon payment of a fee.

§ 553.7 Records.

Records of the National Highway Traffic Safety Administration relating to rulemaking proceedings are available for inspection as provided in section 552(b) of title 5 of the U.S.C. and Part 7 of the regulations of the Secretary of Transportation (Part 7 of this title).

Subpart B—Procedures for Adoption of Rules

§ 553.11 Initiation of rulemaking.

The Administrator may initiate rulemaking either on his own motion or on petition by any interested person after a determination in accordance with Part 552 of this title that grant of the petition is advisable. The Administrator may, in his discretion, also consider the recommendations of other agencies of the United States.

§ 553.13 Notice of proposed rulemaking.

Unless the Administrator, for good cause, finds that notice is impracticable, unnecessary, or contrary to the public interest, and incorporates that finding and a brief statement of the reasons for it in the rule, a notice of proposed rulemaking is issued and interested persons are invited to participate in the rulemaking proceedings under applicable provisions of Title 49.

§ 553.15 Contents of notices of proposed rulemaking.

(a) Each notice of proposed rulemaking is published in the FEDERAL REGISTER, unless all persons subject to it are named and are personally served with a copy of it.

(b) Each notice, whether published in the FEDERAL REGISTER or personally served, includes

(1) A statement of the time, place, and nature of the proposed rulemaking proceeding;

(2) A reference to the authority under which it is issued;

(3) A description of the subjects and issues involved or the substance and terms of the proposed rule;

(4) A statement of the time within which written comments must be submitted; and

(5) A statement of how and to what extent interested persons may participate in the proceedings.

§ 553.17 Participation of interested persons.

(a) Any interested person may participate in rulemaking proceeding by

submitting comments in writing containing information, views or arguments.

(b) In his discretion, the Administrator may invite any interested person to participate in the rulemaking procedures described in § 553.25.

§ 553.19 Petitions for extension of time to comment.

A petition for extension of the time to submit comments must be received not later than 15 days before expiration of the time stated in the notice. The petitions must be submitted to: Administrator, National Highway Traffic Safety Administration, U.S. Department of Transportation, 400 Seventh Street SW, Washington, DC, 20590. It is requested, but not required, that 10 copies be submitted. The filing of the petition does not automatically extend the time for petitioner's comments. Such a petition is granted only if the petitioner shows good cause for the extension, and if the extension is consistent with the public interest. If an extension is granted, it is granted to all persons, and it is published in the FEDERAL REGISTER.

§ 553.21 Contents of written comments.

All written comments shall be in English. Unless otherwise specified in a notice requesting comments, comments may not exceed 15 pages in length, but necessary attachments may be appended to the submission without regard to the 15-page limit. Any interested person shall submit as a part of his written comments all material that he considers relevant to any statement of fact made by him. Incorporation by reference should be avoided. However, if incorporation by reference is necessary, the incorporated material shall be identified with respect to document and page. It is requested, but not required, that 10 copies and attachments, if any, be submitted.

§ 553.23 Consideration of comments received.

All timely comments are considered before final action is taken on a rulemaking proposal. Late filed comments may be considered as far as practicable.

§ 553.25 Additional rulemaking proceedings.

The Administrator may initiate any further rulemaking proceedings that he finds necessary or desirable. For example, interested persons may be invited to make oral arguments, to participate in conferences between the Administrator or his representative and interested persons at which minutes of the conference are kept, to appear at informal hearings presided over by officials designated by the Administrator, at which a transcript or minutes are kept, or participate in any other proceeding to assure informed administrative action and to protect the public interest.

§ 553.27 Hearings.

(a) Sections 556 and 557 of title 5, United States Code, do not apply to hearings held under this part. Unless otherwise specified, hearings held under this part are informal, nonadversary, fact-finding proceedings, at which there are no formal pleadings or adverse parties. Any rule issued in a case in which an informal hearing is held is not necessarily based exclusively on the record of the hearing.

(b) The Administrator designates a representative to conduct any hearing held under this part. The Chief Counsel designates a member of his staff to serve as legal officer at the hearing.

§ 553.29 Adoption of final rules.

Final rules are prepared by representatives of the office concerned and the Office of the Chief Counsel. The rule is then submitted to the Administrator for its consideration. If the Administrator adopts the rule, it is published in the FEDERAL REGISTER, unless all persons subject to it are named and are personally served with a copy of it.

§ 553.31–553.33 [Reserved]

§ 553.35 Petitions for reconsideration.

(a) Any interested person may petition the Administrator for reconsideration of any rule issued under this part. The petition shall be submitted to: Administrator, National Highway Traffic Safety Administration, 400 Seventh Street, SW, Washington, DC, 20590. It is requested, but not required,

that 10 copies be submitted. The petition must be received not later than 45 days after publication of the rule in the FEDERAL REGISTER. Petitions filed after that time will be considered as petitions filed under Part 552 of this chapter. The petition must contain a brief statement of the complaint and an explanation as to why compliance with the rule is not practicable, is unreasonable, or is not in the public interest. Unless otherwise specified in the final rule, the statement and explanation together may not exceed 15 pages in length, but necessary attachments may be appended to the submission without regard to the 15-page limit.

(b) If the petitioner requests the consideration of additional facts, he must state the reason they were not presented to the Administrator within the prescribed time.

(c) The Administrator does not consider repetitious petitions.

(d) Unless the Administrator otherwise provides, the filing of a petition under this section does not stay the effectiveness of the rule.

§ 553.37 Proceedings on petitions for reconsideration.

The Administrator may grant or deny, in whole or in part, any petition for reconsideration without further proceedings. In the event he determines to reconsider any rule, he may issue a final decision on reconsideration without further proceedings, or he may provide such opportunity to submit comment or information and data as he deems appropriate. Whenever the Administrator determines that a petition should be granted or denied, he prepares a notice of the grant or denial of a petition for reconsideration, for issuance to the petitioner, and issues it to the petitioner. The Administrator may consolidate petitions relating to the same rule.

§ 553.39 Effect of petition for reconsideration on time for seeking judicial review.

The filing of a timely petition for reconsideration of any rule issued under this part postpones the expiration of the statutory period in which to seek judicial review of that rule only as to the petitioner, and not as to other interested persons. For the petitioner, the period for seeking judicial review will commence at the time the agency takes final action upon the petition for reconsideration.

[60 FR 63651, Dec. 12, 1995]

APPENDIX A TO PART 553—STATEMENT OF POLICY: ACTION ON PETITIONS FOR RECONSIDERATION

It is the policy of the National Highway Traffic Safety Administration to issue notice of the action taken on a petition for reconsideration within 90 days after the closing date for receipt of such petitions, unless it is found impracticable to take action within that time. In cases where it is so found and the delay beyond that period is expected to be substantial, notice of that fact, and the date by which it is expected that action will be taken, will be published in the FEDERAL REGISTER.

APPENDIX B TO PART 553—STATEMENT OF POLICY: RULEMAKINGS INVOLVING THE ASSESSMENT OF THE FUNCTIONAL EQUIVALENCE OF SAFETY STANDARDS

(a) Based on a comparison of the performance of vehicles or equipment, the National Highway Traffic Safety Administration (NHTSA) may tentatively determine that a foreign motor vehicle safety standard is better than or at least functionally equivalent to a Federal Motor Vehicle Safety Standard (FMVSS), either on its own motion or in connection with a petition for rulemaking by any interested party under 49 CFR Part 552. Such determinations will be made in accordance with the process described in the flowchart in Figure 1 of this Appendix.

(b) Under the process, if NHTSA decides that there is reason to believe that a foreign standard is better than or at least functionally equivalent to a FMVSS in accordance with the process, it will commence a rulemaking proceeding that may lead to the issuance of a proposal to add the foreign standard as an alternative compliance option to the FMVSS, to harmonize the FMVSS with the foreign standard or to upgrade the FMVSS to the level of the foreign standard, as appropriate. Such a proposal will request comment on the agency's tentative determination regarding relative benefits and functional equivalence as well as the proposed amendment. Final determinations regarding these matters will also be made in accordance with the analytical criteria in the flowchart.

(c) As used in this appendix, the term ''standard'' refers to mandatory requirements and thus has the same meaning given the term ''technical regulation'' in Annex 1 to the World Trade Organization Technical Barriers to Trade Agreement.

FUNCTIONAL EQUIVALENCE ASSESSMENT

PROCESS USED BY NHTSA IN COMPARING ITS VEHICLE SAFETY STANDARDS WITH THOSE OF ANOTHER COUNTRY (B) AND DETERMINING WHETHER RULEMAKING IS APPROPRIATE

FIGURE 1

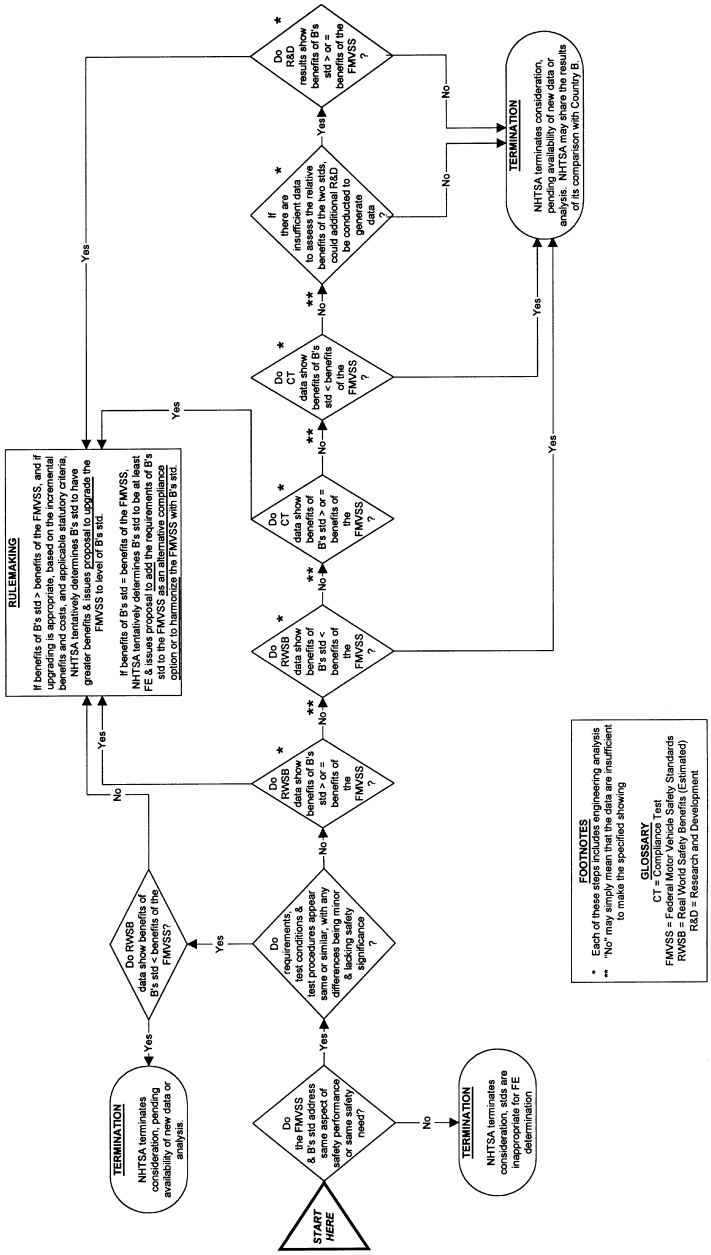

EXPLANATION OF FLOWCHART

A. ULTIMATE GOAL

The ultimate goal in comparing standards is to assess the real world safety performance of the covered vehicles or equipment. Particularly in the case of crashworthiness standards, the most reliable basis for making that assessment is fatality and injury data directly drawn from actual crashes. Accordingly, NHTSA will make appropriate efforts to ensure the availability of such data regarding crashes in the U.S.

B. GUIDING PRINCIPLES

Best Practices

NHTSA pursues a ''best practices'' policy in comparing U.S. and foreign safety standards, i.e., NHTSA will propose to upgrade its standards if it tentatively concludes that a Country B standard offers greater benefits than the counterpart FMVSS, and if upgrading appears appropriate, considering the incremental costs and benefits and applicable statutory criteria. (For a discussion of another type of rulemaking proposal that may be considered in these circumstances, see the paragraph below on comparisons that indicate that a foreign standard's safety benefits are greater than those of the counterpart FMVSS.)

Conservatism

1. NHTSA places priority on preserving the safety benefits of the FMVSSs.

2. NHTSA can best preserve those benefits by being conservative in reaching any conclusion that a Country B standard is better than or at least functionally equivalent to the counterpart FMVSS. One reason for conservatism is that differences from vehicle model to vehicle model and manufacturer to manufacturer in margins of compliance may confound efforts to assess the relative benefits of two standards. Further, there may be circumstantial differences, such as special environmental conditions, driver demographics, driver behavior, occupant behavior (e.g., level of safety belt use), road conditions, size distribution of vehicle fleet (e.g., proportion of big versus small vehicles and disparity between extremes), that could influence real world safety benefits. These differences may result in a particular standard having a safety record in a foreign country that would not necessarily be repeated in the United States.

Best Available Evidence

1. NHTSA will base its comparison of standards on the best available evidence. If available, estimates of real world safety benefits based on fatality and injury data directly drawn from actual crashes are the best evidence. If such data are not available, then estimates based on other information, such as compliance test data, may be used, although increased caution needs to be exercised in making judgment based on those estimates. If sufficient crash data regarding real world safety benefits are available, and a comparison of those benefits shows that the Country B standard is less beneficial than the counterpart Federal Motor Vehicle Safety Standard (FMVSS), NHTSA would avoid wasting resources making comparisons on the basis of less probative types of evidence.

2. The types of benefits examined in comparing two standards might differ depending on whether the standards are crash avoidance standards or crashworthiness standards. Translating differences in performance (an input measure) into numbers of crashes or numbers of deaths and injuries (output measures) is more difficult in the case of crash avoidance standards. As a result, while the relative benefits of two crashworthiness standards would typically be assessed in terms of their impacts on deaths and injuries in crashes, the relative merits of two different crash avoidance standards might well be assessed in terms of their impact on vehicle or equipment performance.

Sufficiency of Evidence

1. Many types of data are available for a comparison of two standards. Often there is an abundance of one type of data and little or no data from other sources. If insufficient data are available, and such data either cannot be generated through engineering analysis (e.g., real world safety benefits estimates), or conducting additional research and development is not cost effective, then NHTSA will stop consideration of such data and consider the other available data instead.

2. The essentially horizontal, left-to-right path through the flowchart is intended to illustrate the sources of data that will be considered and provide a rough idea of the priority they will receive. Each step branches independently to the tentative determination of relative benefits and functional equivalency by its ''yes'' path. This may seem to preclude later steps once any ''yes'' path is encountered. In practice, however, all data sources will be considered to the extent that they are available before a final determination regarding these matters is made.

Reciprocity

1. NHTSA will take steps to encourage reciprocity by other countries in the making of functional equivalence determinations.

2. When NHTSA's comparison of standards indicates that one of the FMVSSs has benefits equal to or greater than the counterpart Country B standard, NHTSA may forward the results of that comparison to Country B

and request that consideration be given by Country B to determining that the FMVSS is better than or at least functionally equivalent to the counterpart Country B standard, and to subsequently amending its standard accordingly.

C. AGENCY DECISIONS IN WHICH FLOWCHART IS USED

This flowchart guides agency decisions in connection with a rulemaking proceeding that involves the issue of relative benefits and functional equivalence.

1. *Decision whether to grant a rulemaking petition.* If the agency receives a petition for rulemaking based on a claim that one of Country B's standards is better than or at least functionally equivalent to one of the Federal Motor Vehicle Safety Standards (FMVSSs), the agency will consider the merits of the petition in accordance with 49 CFR Part 552, Petitions for rulemaking, defect, and noncompliance orders, and with the functional equivalence process set forth in the flowchart. If it appears that there is reason to believe that Country B's standard provides safety benefits are greater than or at least equal to those of the FMVSS, the agency will likely grant the petition and commence a rulemaking proceeding.

The agency emphasizes that its priority with respect to international harmonization is identifying and adopting those foreign safety standards that represent best practices. Accordingly, if resource limitations make it necessary to choose between competing petitions in granting or processing them, the agency would give priority to petitions asking the agency to upgrade one of its standards to the level of a superior foreign standard over petitions simply asking the agency to add a compliance alternative.

2. *Decision whether to issue a notice of proposed rulemaking.* If NHTSA grants the petition, it will proceed, as in any other rulemaking regarding the FMVSSs, to determine whether amending an FMVSS would be appropriate under the applicable statutory criteria in chapter 301 of title 49, U.S.C. Following the process set forth in the flowchart, the agency will use data submitted by the petitioner, supplemented by data from other sources, to compare performance and tentatively determine whether Country B's standard specified in the petition is better than or at least functionally equivalent to the FMVSS specified in the petition.

This comparison could have a variety of possible outcomes:

a. *The comparison may indicate that the foreign standard's safety benefits are less than those of the counterpart FMVSS.* If NHTSA determines that the foreign standard results in fewer safety benefits than the counterpart FMVSS, it will terminate the rulemaking proceeding.

b. *The comparison may indicate that the foreign standard's safety benefits are approximately equal to those of the counterpart FMVSS.* If the agency tentatively determines that the safety benefits of a foreign standard are approximately equal to those of a FMVSS, it will take one of two steps in most instances. One possibility is that it will develop a notice of proposed rulemaking (NPRM) proposing to amend the FMVSS by adding the foreign standard as an alternative to the existing requirements of the FMVSS. The other possibility is that the agency will develop an NPRM proposing to harmonize the FMVSS with the foreign standard. This second approach would enable NHTSA to maintain a single set of requirements and test procedures in its standard, thereby minimizing any drain on its enforcement resources. An additional possibility that might be considered in some instances would be ''qualified functional equivalence.'' Under this third approach, the agency would regard Country B's standard to be functionally equivalent if it is supplemented by a specified requirement in the counterpart FMVSS.

c. *The comparison may indicate that the foreign standard's safety benefits are greater than those of the counterpart FMVSS.* If NHTSA tentatively determines that the foreign standard results in greater safety benefits than the counterpart FMVSS, and if upgrading is appropriate, based on the incremental benefits and costs and applicable statutory criteria, the agency issues an NPRM proposing to upgrade the FMVSS to the level of Country B's std. If upgrading is not appropriate, NHTSA considers issuing an NPRM proposing to add the requirements of Country B's std to the FMVSS as an alternative compliance option. The proposal to add the compliance option would set forth the basis for the agency's conclusion that upgrading the FMVSS is inappropriate.

If NHTSA issues an NPRM, it would request comment on the tentative determination and the proposed amendment.

3. *Decision whether to issue a final rule.* Any final decision to make a determination regarding relative benefits and functional equivalency and to amend the FMVSS will be made in accordance with the process in the flowchart and applicable law and only after careful consideration and analysis of the public comments.

[63 FR 26514, May 13, 1998]

APPENDIX C TO PART 553—STATEMENT OF POLICY: IMPLEMENTATION OF THE UNITED NATIONS/ECONOMIC COMMISSION FOR EUROPE (UN/ECE) 1998 AGREEMENT ON GLOBAL TECHNICAL REGULATIONS—AGENCY POLICY GOALS AND PUBLIC PARTICIPATION

I. AGENCY POLICY GOALS FOR THE 1998 GLOBAL AGREEMENT AND INTERNATIONAL MOTOR VEHICLE SAFETY HARMONIZATION

A. Paramount Policy Goal Under the 1998 Global Agreement

Continuously improve safety and seek high levels of safety, particularly by developing and adopting new global technical regulations reflecting consideration of current and anticipated technology and safety problems.

B. Other Policy Goals

1. Adopt and maintain U.S. standards that fully meet the need in the U.S. for vehicle safety.
2. Harmonize U.S. standards with those of other countries or regions, particularly by raising U.S. standards at least to the level of the best practices in those other safety standards.
3. Enhance regulatory effectiveness through regulatory cooperation with other countries and regions, thereby providing greater safety protection with available government resources.

II. PUBLIC PARTICIPATION AND THE ESTABLISHING OF GLOBAL TECHNICAL REGULATIONS FOR MOTOR VEHICLE SAFETY, THEFT, AND ENERGY EFFICIENCY

A. Summary of the Process Under the 1998 Global Agreement for Establishing Global Technical Regulations

1. Proposal Stage

A Contracting Party submits a proposal for either a harmonized or new global technical regulation to the Executive Committee of the 1998 Global Agreement (*i.e.*, the Contracting Parties to the Agreement). If appropriate, the Committee then refers the proposal to a working party of experts to develop the technical elements of the regulation.

2. Recommendation Stage

When a working party of experts recommends a harmonized or new global technical regulation, it sends a report and the recommended regulation to the Executive Committee. The Committee then determines whether the recommendations are adequate and considers the establishment of the recommended regulation.

3. Establishment Stage

If the Executive Committee reaches consensus in favor of that recommended global technical regulation, the global technical regulation is established in the Global Registry.

B. Notice of Annual Work Program of WP.29

Each year, NHTSA will publish a notice concerning the motor vehicle safety, theft, and energy efficiency aspects of the annual program of work for the UN/ECE's World Forum for Harmonization of Vehicle Regulations (WP.29). Each notice will include:

1. A calendar of scheduled meetings of WP.29 participants and working parties of experts, and meetings of the Executive Committee; and
2. A list of the global technical regulations that:
   a. Have been proposed and referred to a working party of experts, or
   b. Have been recommended by a working party of experts.

Periodically, the notice will also include a request for public comments on the subjects for which global technical regulations should be established under the 1998 Global Agreement. The agency will publish a subsequent notice identifying the priorities on which NHTSA will focus in the future under the 1998 Global Agreement.

C. Public Meetings

NHTSA will hold periodic public meetings on its activities under the 1998 Global Agreement. If the extent of recent and anticipated significant developments concerning those activities so warrant, NHTSA will hold a public meeting within the 60-day period before each of the three sessions of WP.29 held annually. At each of these public meetings, NHTSA will:

1. Brief the public on the significant developments that occurred at the session of WP.29, the meetings of the working parties of experts and the meetings of the Executive Committee since the previous public meeting;
2. Based on the availability of provisional agendas, inform the public about the significant issues to be addressed at upcoming session of WP.29 and meetings of the working parties of experts and any votes scheduled at the next session of the Executive Committee on recommended global technical regulations; and
3. Invite public comment and questions concerning those past developments and upcoming issues and votes and the general positions that the U.S. could take regarding those votes, and concerning any other significant developments and upcoming matters relating to pending proposed or recommended global technical regulations.

Appropriate agency officials will participate in the public meetings. These public meetings may be held separately from or in conjunction with the agency's quarterly meetings on its vehicle rulemaking and research and development programs. The agency may hold additional public meetings.

D. Notices Concerning Individual Global Technical Regulations

1. Notice Requesting Written Comment on Proposed Global Technical Regulations

a. *Proposals by the U.S.* (See Figure 1.)

Before submitting a draft U.S. proposal for a global technical regulation to WP.29, NHTSA will publish a notice requesting public comments on the draft proposed global technical regulation. In the case of a draft proposal for a harmonized global technical regulation, the notice will compare that regulation with any existing, comparable U.S. standard, including the relative impacts of the regulation and standard. In the case of a draft proposal for a new global technical regulation, the notice will generally discuss the problem addressed by the proposal, the rationale for the proposed approach for addressing the problem, and the impacts of the proposal. NHTSA will consider the public comments and, as it deems appropriate, revise the proposal and any of its supporting documentation and then submit the proposal to WP.29.

b. *Proposals by a Contracting Party other than the U.S.* (See Figure 2.)

After a proposal by a Contracting Party other than the U.S. has been referred to a working party of experts and has been made available in English by WP.29, NHTSA will make the draft proposal available in the DOT docket (*http://dms.dot.gov/*). The agency will then publish a notice requesting public comment on the draft proposal and will consider the comments in developing a U.S. position on the proposal.

2. Notice Requesting Written Comment on Recommended Global Technical Regulations

If a working party of experts recommends a global technical regulation and sends a report and the recommended regulation to the Executive Committee, NHTSA will make an English language version of the report and the regulation available in the DOT docket (*http://dms.dot.gov/*) after they are made available by WP.29. The agency will publish a notice requesting public comment on the report and regulation. Before participating in a vote of the Executive Committee regarding the establishment of the regulation, the agency will consider the comments and develop a U.S. position on the recommended technical regulation.

3. Notice Requesting Written Comment on Established Global Technical Regulations

If a global technical regulation is established in the Global Registry by a consensus vote of the Executive Committee, and if the U.S. voted for establishment, NHTSA will publish a notice requesting public comment on adopting the regulation as a U.S. standard. Any decision by NHTSA whether to issue a final rule adopting the regulation or to issue a notice terminating consideration of that regulation will be made in accordance with applicable U.S. law and only after careful consideration and analysis of public comments.

E. Availability of Documents

As we obtain English versions of key documents relating to motor vehicle safety, theft or energy conservation that are generated under the 1998 Agreement (e.g., proposals referred to a working party of experts, and reports and recommendations issued by a working party), we will place them in the internet-accessible DOT docket (*http://dms.dot.gov/*). Within the limits of available resources, we will also place the documents on an international activities page that will be included in our Website (*http://www.nhtsa.dot.gov/cars/rules/international/index.html*).

Figure 1

Public Participation

US Proposal

for a Harmonized or New Global Technical Regulation

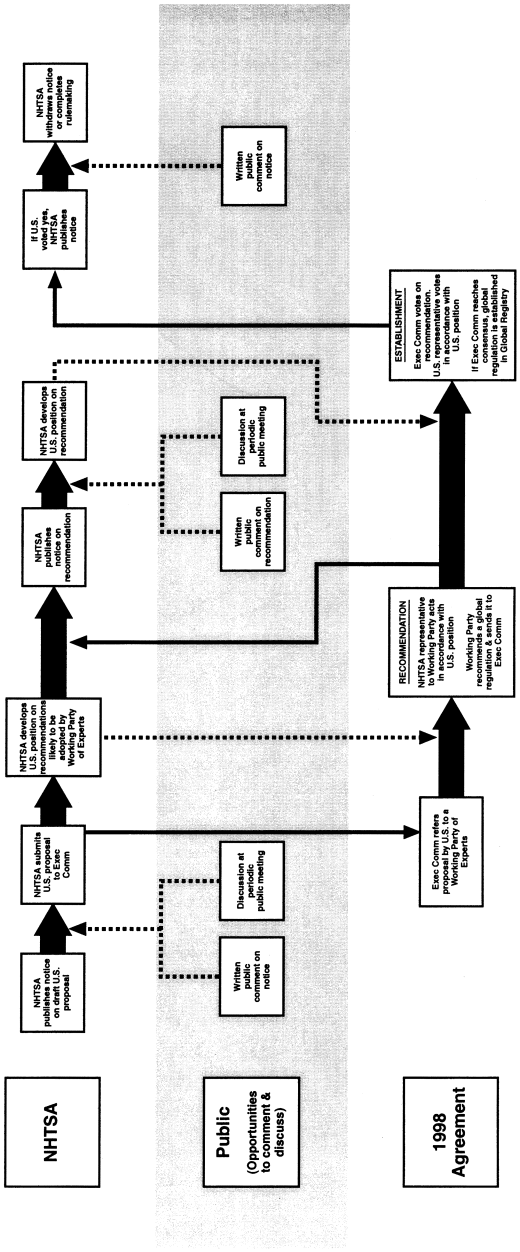

Figure 2

Public Participation

Non-US Proposal

for a Harmonized or New Global Technical Regulation

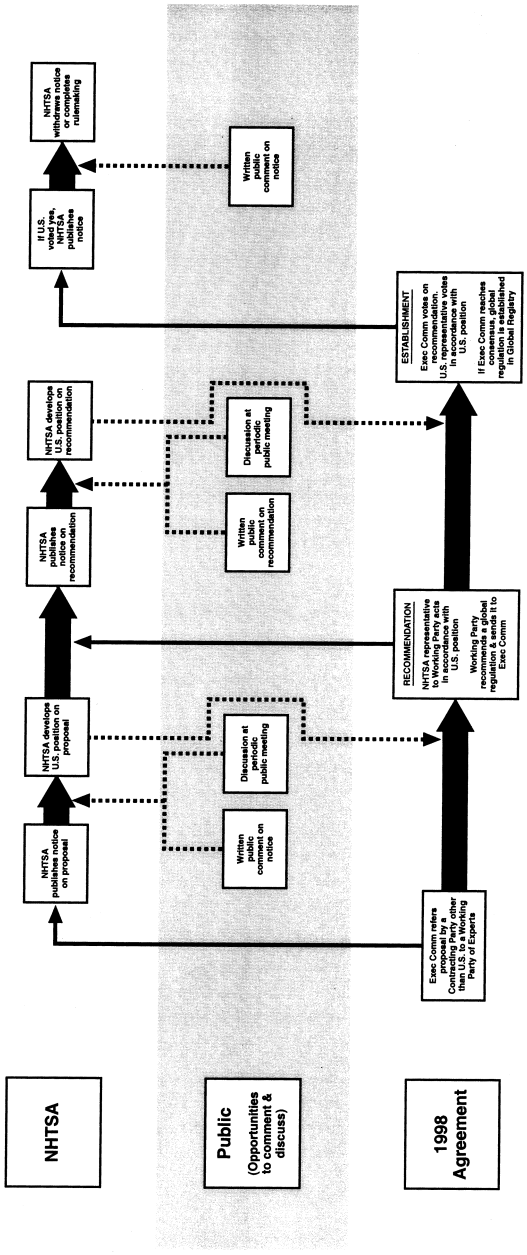

[65 FR 51245, Aug. 23, 2000]

PART 554—STANDARDS ENFORCEMENT AND DEFECTS INVESTIGATION

Sec.
554.1 Scope.
554.2 Purpose.
554.3 Application.
554.4 Office of Vehicle Safety Compliance.
554.5 Office of Defects Investigation.
554.6 Opening an investigation.
554.7 Investigation priorities.
554.8 Monthly reports.
554.9 Availability of files.
554.10 Initial determinations and public meetings.
554.11 Final decisions.

AUTHORITY: 49 U.S.C. 30102–103, 30111–112, 30117–121, 30162, 30165–67; delegation of authority at 49 CFR 1.50.

SOURCE: 45 FR 10797, Feb. 19, 1980, unless otherwise noted.

§ 554.1 Scope.

This part establishes procedures for enforcing Federal motor vehicle safety standards and associated regulations, investigating possible safety-related defects, and making non-compliance and defect determinations.

§ 554.2 Purpose.

The purpose of this part is to inform interested persons of the procedures followed by the National Highway Traffic Safety Administration in order more fairly and effectively to implement 49 U.S.C. Chapter 301.

[60 FR 17267, Apr. 5, 1995]

§ 554.3 Application.

This part applies to actions, investigations, and defect and noncompliance decisions of the National Highway traffic Safety Administration under 49 U.S.C. 30116, 30117, 30118, 30120 and 30165.

[60 FR 17267, Apr. 5, 1995]

§ 554.4 Office of Vehicle Safety Compliance.

The Office of Vehicle Safety Compliance, investigates compliance with Federal motor vehicle safety standards and associated regulations, and to this end may:

(a) Verify that manufacturers certify compliance with all applicable safety standards;

(b) Collect field reports from all sources;

(c) Inspect manufacturers' certification test data and other supporting evidence, including dealer communications;

(d) Inspect vehicles and equipment already in use or new vehicles and equipment at any stage of the manufacturing, distribution and sales chain;

(e) Conduct selective compliance tests; and

(f) Utilize other means necessary to conduct investigations.

§ 554.5 Office of Defects Investigation.

The Office of Defects Investigation conducts investigations to implement the provisions of the Act concerning the identification and correction of safety-related defects in motor vehicles and motor vehicle equipment. It elicits from every available source and evaluates on a continuing basis any information suggesting the existence of a safety-related defect.

§ 554.6 Opening an investigation.

(a) A compliance or defect investigation is opened either on the motion of the Administrator or his delegate or on the granting of a petition of an interested party under part 552 of this chapter.

(b) A manufacturer is notified immediately by telephone of any compliance test failure in order to enable the manufacturer to begin his own investigation. Notification is sent by mail at the beginning of any defect or noncompliance investigation.

§ 554.7 Investigation priorities.

(a) Compliance investigation priorities are reviewed annually and are set according to the following criteria:

(1) Prior compliance test data;

(2) Accident data;

(3) Engineering analysis of vehicle and equipment designs;

(4) Consumer complaints; and

(5) Market share.

(b) Defects inputs are reviewed periodically by an appropriate panel of engineers in consultation with the Office of Chief Counsel to determine whether a formal investigation should be opened by the Office of Defects Investigation.

§ 554.8 Monthly reports.

(a) *Compliance.* A monthly compliance report is issued which lists investigations opened, closed, and pending during that month, identifies compliance test reports accepted, and indicates how individual reports may be obtained.

(b) *Defects.* A monthly defects report is issued which lists investigations opened, closed, pending, and suspended during that month. An investigation may be designated ''suspended'' where the information available is insufficient to warrant further investigation. Suspended cases are automatically closed 60 days after appearing in a monthly report unless new information is received which justifies a different disposition.

§ 554.9 Availability of files.

All files of closed or suspended investigations are available for public inspection in the NHTSA Technical Reference Library. Communications between the agency and a manufacturer with respect to ongoing investigations are also available. Such files and communications may contain material which is considered confidential but has been determined to be necessary to the subject proceeding. Material which is considered confidential but has not been determined to be necessary to the subject proceeding will not be disclosed. Reproduction of entire public files or of individual documents can be arranged.

§ 554.10 Initial determinations and public meetings.

(a) An initial decision of failure to comply with safety standards or of a safety-related defect is made by the Administrator or his delegate based on the completed investigative file compiled by the appropriate office.

(b) The decision is communicated to the manufacturer in a letter which makes available all information on which the decision is based. The letter advises the manufacturer of his right to present information, views, and arguments to establish that there is no defect or failure to comply or that the alleged defect does not affect motor vehicle safety. The letter also specifies the time and place of a public meeting for the presentation of arguments or sets a date by which written comments must be submitted. Submission of all information, whether at a public meeting or in written form, is normally scheduled about 30 days after the initial decision. The deadline for submission of information can be extended for good cause shown.

(c) Public notice of an initial decision is made in a FEDERAL REGISTER notice that—

(1) Identifies the motor vehicle or item of equipment and its manufacturer;

(2) Summarizes the information on which the decision is based.

(3) Gives the location of all information available for public examination; and

(4) States the time and place of a public meeting or the deadline for written submission in which the manufacturer and interested persons may present information, views, and arguments respecting the decision.

(d) A transcript of the public meeting is kept and exhibits may be offered. There is no cross-examination of witnesses.

[45 FR 10797, Feb. 19, 1980, as amended at 60 FR 17267, Apr. 5, 1995]

§ 554.11 Final decisions.

(a) The Administrator bases his final decision on the completed investigative file and on information, views, and arguments submitted at the public meeting.

(b) If the Administrator decides that a failure to comply or a safety-related defect exists, he orders the manufacturer to furnish the notification specified in 49 U.S.C. 30118 and 30119 and to remedy the defect or failure to comply.

(c) If the Administrator closes an investigation following an initial determination, without making a final determination that a failure to comply or a safety-related defect exists, he or she will so notify the manufacturer and publish a notice of that closing in the FEDERAL REGISTER.

(d) A statement of the Administrator's final decision and the reasons for it appears in each completed public file.

[60 FR 17268, Apr. 5, 1995]

PART 555—TEMPORARY EXEMPTION FROM MOTOR VEHICLE SAFETY AND BUMPER STANDARDS

Sec.
555.1 Scope.
555.2 Purpose.
555.3 Application.
555.4 Definitions.
555.5 Application for exemption.
555.6 Basis for application.
555.7 Processing of applications.
555.8 Termination of temporary exemptions.
555.9 Temporary exemption labels.
555.10 Availability for public inspection.

AUTHORITY: 49 U.S.C. 30113, 32502, Pub. L. 105–277; delegation of authority at 49 CFR 1.50.

SOURCE: 38 FR 2694, Jan. 29, 1973, unless otherwise noted.

§ 555.1 Scope.

This part establishes requirements for the temporary exemption by the National Highway Traffic Safety Administration (NHTSA) of certain motor vehicles from compliance with one or more Federal motor vehicle safety standards in accordance with 49 U.S.C. 30113, and of certain passenger motor vehicles from compliance with all or part of a Federal bumper standard in accordance with 49 U.S.C. 32502.

[64 FR 2861, Jan. 19, 1999]

§ 555.2 Purpose.

(a) The purpose of this part is to provide a means by which manufacturers of motor vehicles may obtain temporary exemptions from Federal motor vehicle safety standards on the basis of substantial economic hardship, facilitation of the development of new motor vehicle safety or low-emission engine features, or existence of an equivalent overall level of motor vehicle safety.

(b) The purpose of this part is also to provide a means by which manufacturers of passenger motor vehicles may obtain a temporary exemption from compliance with all or part of a Federal bumper standard issued under part 581 of this chapter on a basis similar to that provided for exemptions from the Federal motor vehicle safety standards.

[38 FR 2694, Jan. 29, 1973, as amended at 64 FR 2861, Jan. 19, 1999]

§ 555.3 Application.

This part applies to manufacturers of motor vehicles and passenger motor vehicles.

[64 FR 2861, Jan. 19, 1999]

§ 555.4 Definitions.

Administrator means the National Highway Traffic Safety Administrator or his delegate.

Passenger motor vehicle means a motor vehicle with motive power designed to carry not more than 12 individuals, but does not include a truck not designed primarily to carry its operator or passengers, or a motorcycle.

United States means the several States, the District of Columbia, the Commonwealth of Puerto Rico, Guam, the Virgin Islands, the Canal Zone, and American Samoa.

[38 FR 2694, Jan. 29, 1973, as amended at 64 FR 2861, Jan. 19, 1999]

§ 555.5 Application for exemption.

(a) A manufacturer of motor vehicles or passenger motor vehicles may apply to NHTSA for a temporary exemption from any Federal motor vehicle safety or bumper standard or for a renewal of any exemption on the bases of substantial economic hardship, making easier the development or field evaluation of new motor vehicle safety or impact protection, or low-emission vehicle features, or that compliance with a standard would prevent it from selling a vehicle with an overall level of safety or impact protection at least equal to that of nonexempted vehicles.

(b) Each application filed under this part for an exemption or its renewal must—

(1) Be written in the English language;

(2) Be submitted in three copies to: Administrator, National Highway Traffic Safety Administration, Washington, DC 20590;

(3) State the full name and address of the applicant, the nature of its organization (individual, partnership, corporation, etc.) and the name of the

State or country under the laws of which it is organized;

(4) State the number and title, and the text or substance of the standard or portion thereof from which the temporary exemption is sought, and the length of time desired for such exemption;

(5) Set forth the basis for the application and the information required by § 555.6(a), (b), (c), or (d) as appropriate.

(6) Specify any part of the information and data submitted which petitioner requests be withheld from public disclosure in accordance with part 512 of this chapter.

(i) The information and data which petitioner requests be withheld from public disclosure must be submitted in accordance with § 512.4 *Asserting a claim for confidential information* of this chapter.

(ii) The petitioner's request for withholding from public disclosure must be accompanied by a certification in support as set forth in appendix A to part 512 of this chapter.

(7) Set forth the reasons why the granting of the exemption would be in the public interest, and, as applicable, consistent with the objectives of 49 U.S.C. Chapter 301 or Chapter 325.

(c) The knowing and willful submission of false, fictitious or fraudulent information will subject the petitioner to the civil and criminal penalties of 18 U.S.C. 1001.

[38 FR 2694, Jan. 29, 1973, as amended at 39 FR 5489, Feb. 13, 1974; 46 FR 2063, Jan. 8, 1981; 63 FR 44173, Aug. 18, 1998; 64 FR 2861, Jan. 19, 1999]

§ 555.6 Basis for application.

(a) If the basis of the application is that compliance with the standard would cause substantial economic hardship to a manufacturer that has tried to comply with the standard in good faith, the applicant shall provide the following information:

(1) Engineering and financial information demonstrating in detail how compliance or failure to obtain an exemption would cause substantial economic hardship, including—

(i) A list or description of each item of motor vehicle equipment that would have to be modified in order to achieve compliance;

(ii) The itemized estimated cost to modify each such item of motor vehicle equipment if compliance were to be achieved—

(A) As soon as possible,

(B) At the end of a 1-year exemption period (if the petition is for 1 year or more),

(C) At the end of a 2-year exemption period (if the petition is for 2 years or more),

(D) At the end of a 3-year exemption period (if the petition is for 3 years),

(iii) The estimated price increase per vehicle to balance the total costs incurred pursuant to paragraph (a)(1)(ii) of this section and a statement of the anticipated effect of each such price increase;

(iv) Corporate balance sheets and income statements for the three fiscal years immediately preceding the filing of the application;

(v) Projected balance sheet and income statement for the fiscal year following a denial of the application; and

(vi) A discussion of any other hardships (e.g., loss of market, difficulty of obtaining goods and services for compliance) that the petitioner desires the agency to consider.

(2) A description of its efforts to comply with the standards, including—

(i) A chronological analysis of such efforts showing its relationship to the rule making history of the standard from which exemption is sought;

(ii) A discussion of alternate means of compliance considered and the reasons for rejection of each;

(iii) A discussion of any other factors (e.g., the resources available to the petitioner, inability to procure goods and services necessary for compliance following a timely request) that the petitioner desires the NHTSA to consider in deciding whether the petitioner tried in good faith to comply with the standard;

(iv) A description of the steps to be taken, while the exemption is in effect, and the estimated date by which full compliance will be achieved either by design changes or termination of production of nonconforming vehicles; and

(v) The total number of motor vehicles produced by or on behalf of the petitioner in the 12-month period prior to filing the petition, and the inclusive

dates of the period. (49 U.S.C. 30113(d) limits eligibility for exemption on the basis of economic hardship to manufacturers whose total motor vehicle production in the year preceding the filing of their applications does not exceed 10,000.)

(b) If the basis of the application is that the exemption would make easier the development or field evaluation of a new motor vehicle safety or impact protection features providing a safety or impact protection level at least equal to that of the standard, the applicant shall provide the following information:

(1) A description of the safety or impact protection features, and research, development, and testing documentation establishing the innovational nature of such features.

(2) An analysis establishing that the level of safety or impact protection of the feature is equivalent to or exceeds the level of safety or impact protection established in the standard from which exemption is sought, including—

(i) A detailed description of how a vehicle equipped with the safety or impact protection feature differs from one that complies with the standard;

(ii) If applicant is presently manufacturing a vehicle conforming to the standard, the results of tests conducted to substantiate certification to the standard; and

(iii) The results of tests conducted on the safety or impact protection features that demonstrates performance which meets or exceeds the requirements of the standard.

(3) Substantiation that a temporary exemption would facilitate the development or field evaluation of the vehicle.

(4) A statement whether, at the end of the exemption period, the manufacturer intends to conform to the standard, apply for a further exemption, or petition for rulemaking to amend the standard to incorporate the safety or impact protection features.

(5) A statement that not more than 2,500 exempted vehicles will be sold in the United States in any 12-month period for which an exemption may be granted pursuant to this paragraph. An application for renewal of such an exemption shall also include the total number of exempted vehicles sold in the United States under the existing exemption.

(c) If the basis of the application is that the exemption would make the development or field evaluation of a low-emission vehicle easier and would not unreasonably lower the safety or impact protection level of that vehicle, the applicant shall provide—

(1) Substantiation that the vehicle is a low-emission vehicle as defined by 49 U.S.C. 30113(a).

(2) Research, development, and testing documentation establishing that a temporary exemption would not unreasonably degrade the safety or impact protection of the vehicle, including—

(i) A detailed description of how the motor vehicle equipped with the low-emission engine would, if exempted, differ from one that complies with the standard;

(ii) If the applicant is presently manufacturing a vehicle conforming to the standard, the results of tests conducted to substantiate certification to the standard;

(iii) The results of any tests conducted on the vehicle that demonstrate its failure to meet the standard, expressed as comparative performance levels; and

(iv) Reasons why the failure to meet the standard does not unreasonably degrade the safety or impact protection of the vehicle.

(3) Substantiation that a temporary exemption would facilitate the development or field evaluation of the vehicle.

(4) A statement whether, at the end of the exemption period, the manufacturer intends to conform with the standard.

(5) A statement that not more than 2,500 exempted vehicles will be sold in the United States in any 12-month period for which an exemption may be granted pursuant to this paragraph. An application for renewal of an exemption shall also include the total number of exempted vehicles sold in the United States under the existing exemption.

(d) If the basis of the application is that the applicant is otherwise unable to sell a vehicle whose overall level of safety or impact protection is at least

equal to that of a nonexempted vehicle, the applicant shall provide—

(1) A detailed analysis of how the vehicle provides the overall level of safety or impact protection at least equal to that of nonexempted vehicles, including—

(i) A detailed description of how the motor vehicle, if exempted, differs from one that conforms to the standard;

(ii) A detailed description of any safety or impact protection features that the vehicle offers as standard equipment that are not required by the Federal motor vehicle safety or bumper standards;

(iii) The results of any tests conducted on the vehicle demonstrating that it fails to meet the standard, expressed as comparative performance levels;

(iv) The results of any tests conducted on the vehicle demonstrating that its overall level of safety or impact protection exceeds that which is achieved by conformity to the standards.

(v) Other arguments that the overall level of safety or impact protection of the vehicle is at least equal to that of nonexempted vehicles.

(2) Substantiation that compliance would prevent the sale of the vehicle.

(3) A statement whether, at the end of the exemption period, the manufacturer intends to comply with the standard.

(4) A statement that not more than 2,500 exempted vehicles will be sold in the United States in any 12-month period for which an exemption may be granted pursuant to this paragraph. An application for renewal of any exemption shall also include the total number of exempted vehicles sold in the United States under the existing exemption.

[38 FR 2694, Jan. 29, 1973, as amended at 39 FR 5489, Feb. 13, 1974; 63 FR 44173, Aug. 18, 1998; 64 FR 2861, Jan. 19, 1999]

§ 555.7 Processing of applications.

(a) The NHTSA publishes in the FEDERAL REGISTER, affording opportunity for comment, a notice of each application containing the information required by this part. However, if the NHTSA finds that an application does not contain the information required by this part, it so informs the applicant, pointing out the areas of insufficiency and stating that the application will not receive further consideration until the required information is submitted.

(b) No public hearing, argument, or other formal proceeding is held directly on an application filed under this part before its disposition under this section.

(c) Any interested person may, upon written request, appear informally before an appropriate official of the NHTSA to discuss an application for exemption or the action taken in response to a petition.

(d) If the Administrator determines that the application does not contain adequate justification, he denies it and notifies the petitioner in writing. He also publishes in the FEDERAL REGISTER a notice of the denial and the reasons for it.

(e) If the Administrator determines that the application contains adequate justification, he grants it, and notifies the petitioner in writing. He also publishes in the FEDERAL REGISTER a notice of the grant and the reasons for it.

(f) Unless a later effective date is specified in the notice of the grant, a temporary exemption is effective upon publication of the notice in the FEDERAL REGISTER and exempts vehicles manufactured on and after the effective date.

[38 FR 2694, Jan. 29, 1973, as amended at 39 FR 5489, Feb. 13, 1974; 39 FR 37988, Oct. 25, 1974; 64 FR 2861, 2862, Jan. 19, 1999]

§ 555.8 Termination of temporary exemptions.

(a) A temporary exemption from a standard granted on the basis of substantial economic hardship terminates according to its terms but not later than 3 years after the date of issuance unless terminated sooner pursuant to paragraph (d) of this section.

(b) A temporary exemption from a standard granted on a basis other than substantial economic hardship terminates according to its terms but not later than 2 years after the date of issuance unless terminated sooner pursuant to paragraph (d) of this section.

(c) Any interested person may petition for the termination or modification of an exemption granted under this part. The petition will be processed in accordance with the procedures of part 552 of this chapter.

(d) The Administrator terminates or modifies a temporary exemption if he determines that—

(1) The temporary exemption is no longer consistent with the public interest and the objectives of the Act; or

(2) The temporary exemption was granted on the basis of false, fraudulent, or misleading representations or information.

(e) If an application for renewal of a temporary exemption that meets the requirements of § 555.5 has been filed not later than 60 days before the termination date of an exemption, the exemption does not terminate until the Administrator grants or denies the application for renewal.

(f) The Administrator publishes in the FEDERAL REGISTER a notice of:

(1) An application for termination or modification of an exemption and the action taken in response to it; and

(2) Any termination or modification of an exemption pursuant to the Administrator's own motion.

[38 FR 2694, Jan. 29, 1973, as amended at 39 FR 37989, Oct. 25, 1974; 40 FR 42015, Sept. 10, 1975; 64 FR 2861, Jan. 19, 1999]

§ 555.9 Temporary exemption labels.

A manufacturer of an exempted vehicle shall—

(a) Submit to the Administrator, within 30 days after receiving notification of the grant of an exemption, a sample of the certification label required by part 567 of this chapter and paragraph (c) of this section;

(b) Affix securely to the windshield or side window of each exempted vehicle a label in the English language containing the statement required by paragraph (c)(1) or (2) of this section, and with the words ''Shown above'' omitted.

(c) Meet all applicable requirements of part 567 of this chapter, except that—

(1) The statement required by § 567.4(g)(5) of this chapter shall end with the phrase ''except for Standards Nos. [listing the standards by number and title for which an exemption has been granted] exempted pursuant to NHTSA Exemption No. _____.''

(2) Instead of the statement required by § 567.5(c)(7)(iii), the following statement shall appear:

THIS VEHICLE CONFORMS TO ALL APPLICABLE FEDERAL MOTOR VEHICLE SAFETY (AND BUMPER) STANDARDS IN EFFECT IN [Month, Year] EXCEPT FOR STANDARD NOS. [Listing the standards by number and title for which an exemption has been granted] EXEMPTED PURSUANT TO NHTSA EXEMPTION NO. _____.

(Secs. 114, 119, Pub. L. 89–563, 80 Stat. 718 (15 U.S.C. 1403, 1408); sec. 3, Pub. L. 92–548, 86 Stat. 1159 (15 U.S.C. 1410); secs. 102, 105, Pub. L. 92–513, 86 Stat. 947 (15 U.S.C. 1912, 1915); delegations of authority at 49 CFR 1.50 and 501.8)

[38 FR 2694, Jan. 29, 1973, as amended at 50 FR 10772, Mar. 18, 1985; 60 FR 1750, Jan. 5, 1995]

§ 555.10 Availability for public inspection.

(a) Information relevant to an application under this part, including the application and supporting data, memoranda of informal meetings with the applicant or any other interested person, and the grant or denial of the application, is available for public inspection, except as specified in paragraph (b) of this section, in Room PL–401 (Docket Management), 400 Seventh Street, SW., Washington, DC 20590. Copies of available information may be obtained, as provided in Part 7 of the regulations of the Office of the Secretary of Transportation (49 CFR part 7).

(b) Except for the release of confidential information authorized by part 512 of this chapter, information made available for inspection under paragraph (a) shall not include materials not relevant to the petition for which confidentiality is requested and granted in accordance with 49 U.S.C. 30166 and 30167 and section 552(b) of title 5 of the U.S.C.).

[38 FR 2694, Jan. 29, 1973, as amended at 46 FR 2064, Jan. 8, 1981; 48 FR 44081, Sept. 27, 1983; 63 FR 44173, Aug. 18, 1998; 64 FR 2862, Jan. 19, 1999]

PART 556—EXEMPTION FOR INCONSEQUENTIAL DEFECT OR NONCOMPLIANCE

Sec.
556.1 Scope.
556.2 Purpose.
556.3 Application.
556.4 Petition for exemption.
556.5 Processing of petition.
556.6 Meetings.
556.7 Disposition of petition.
556.8 Rescission of decision.
556.9 Public inspection of relevant information.

AUTHORITY: Sec. 157, Pub. L. 93–492, 88 Stat. 1470 (15 U.S.C. 1417); delegation of authority at 49 CFR 1.50.

SOURCE: 42 FR 7145, Feb. 7, 1977, unless otherwise noted.

§ 556.1 Scope.

This part sets forth procedures, pursuant to section 157 of the Act, for exempting manufacturers of motor vehicles and replacement equipment from the Act's notice and remedy requirements when a defect or noncompliance is determined to be inconsequential as it relates to motor vehicle safety.

§ 556.2 Purpose.

The purpose of this part is to enable manufacturers of motor vehicles and replacement equipment to petition the NHTSA for exemption from the notification and remedy requirements of the Act due to the inconsequentiality of the defect or noncompliance as it relates to motor vehicle safety, and to give all interested persons an opportunity for presentation of data, views, and arguments on the issues of inconsequentiality.

§ 556.3 Application.

This part applies to manufacturers of motor vehicles and replacement equipment.

§ 556.4 Petition for exemption.

(a) A manufacturer who has determined the existence, in a motor vehicle or item of replacement equipment that he produces, of a defect related to motor vehicle safety or a noncompliance with an applicable Federal motor vehicle safety standard, or who has received notice of an initial determination by the NHTSA of the existence of a defect related to motor vehicle safety or a noncompliance, may petition for exemption from the Act's notification and remedy requirements on the grounds that the defect or noncompliance is inconsequential as it relates to motor vehicle safety.

(b) Each petition submitted under this part shall—

(1) Be written in the English language;

(2) Be submitted in three copies to: Administrator, National Highway Traffic Safety Administration, Washington, DC 20590;

(3) State the full name and address of the applicant, the nature of its organization (e.g., individual, partnership, or corporation) and the name of the State or country under the laws of which it is organized.

(4) Describe the motor vehicle or item of replacement equipment, including the number involved and the period of production, and the defect or noncompliance concerning which an exemption is sought; and

(5) Set forth all data, views, and arguments of the petitioner supporting his petition.

(6) Be accompanied by three copies of the report the manufacturer has submitted, or is submitting, to NHTSA in accordance with part 573 of this chapter, relating to its determination of the existence of safety related defect or noncompliance with an applicable safety standard that is the subject of the petition.

(c) In the case of defects related to motor vehicle safety or noncompliances determined to exist by a manufacturer, petitions under this part must be submitted not later than 30 days after such determination. In the case of defects related to motor vehicle safety or noncompliances initially determined to exist by the NHTSA, petitions must be submitted not later than 30 days after notification of the determination has been received by the manufacturer. Such a petition will not constitute a concession by the manufacturer of, nor will it be considered relevant to, the existence of a defect

related to motor vehicle safety or a nonconformity.

[42 FR 7145, Feb. 7, 1977, as amended at 56 FR 66376, Dec. 23, 1991]

§ 556.5 Processing of petition.

(a) The NHTSA publishes a notice of each petition in the FEDERAL REGISTER. Such notice includes:

(1) A brief summary of the petition;

(2) A statement of the availability of the petition and other relevant information for public inspection; and

(3)(i) In the case of a defect related to motor vehicle safety or a noncompliance determined to exist by the manufacturer, an invitation to interested persons to submit written data, views, and arguments concerning the petition, and, upon request by the petitioner or interested persons, a statement of the time and place of a public meeting at which such materials may be presented orally if any person so desires.

(ii) In the case of a defect related to motor vehicle safety or a noncompliance initially determined to exist by the NHTSA, an invitation to interested persons to submit written data, views, and arguments concerning the petition or to submit such data, views, and arguments orally at the meeting held pursuant to section 152(a) of the Act following the initial determination, or at a separate meeting if deemed appropriate by the agency.

§ 556.6 Meetings.

(a) At a meeting held under this part, any interested person may make oral (as well as written) presentations of data, views, and arguments on the question whether the defect or noncompliance described in the FEDERAL REGISTER notice is inconsequential as it relates to motor vehicle safety.

(b) Sections 556 and 557 of Title 5, U.S.C., do not apply to any meeting held under this part. Unless otherwise specified, any meeting held under this part is an informal, nonadversary, fact-finding proceeding, at which there are no formal pleadings or adverse parties. A decision to grant or deny a petition, after a meeting on such petition, is not necessarily based exclusively on the record of the meeting.

(c) The Administrator designates a representative to conduct any meeting held under this part. The Chief Counsel designates a member of his staff to serve as legal officer at the meeting. A transcript of the proceeding is kept and exhibits may be kept as part of the transcript.

§ 556.7 Disposition of petition.

Notice of either a grant or denial of a petition for exemption from the notice and remedy requirements of the Act based upon the inconsequentiality of a defect or noncompliance is issued to the petitioner and published in the FEDERAL REGISTER. The effect of a grant of a petition is to relieve the manufacturer from any further responsibility to provide notice and remedy of the defect or noncompliance. The effect of a denial is to continue in force, as against a manufacturer, all duties contained in the Act relating to notice and remedy of the defect or noncompliance. Any interested person may appeal the grant or denial of a petition by submitting written data, views, or arguments to the Administrator.

§ 556.8 Rescission of decision.

The Administrator may rescind a grant or denial of an exemption issued under this part any time after the receipt of new data and notice and opportunity for comment thereon, in accordance with §§ 556.5 and 556.7.

§ 556.9 Public inspection of relevant information.

Information relevant to a petition under this part, including the petition and supporting data, memoranda of informal meetings with the petitioner or any other interested person concerning the petition, and the notice granting or denying the petition, are available for public inspection in the Docket Section, Room 5109, National Highway Traffic Safety Administration, 400 Seventh Street, SW., Washington, DC 20590. Copies of available information may be obtained in accordance with Part 7 of the regulations of the Office of the Secretary of Transportation (49 CFR part 7).

(Authority: Sec. 104, Pub. L. 93–492, 88 Stat. 1470 (15 U.S.C. 1417))

[42 FR 7145, Feb. 7, 1977, as amended at 48 FR 44081, Sept. 27, 1983]

PART 557—PETITIONS FOR HEARINGS ON NOTIFICATION AND REMEDY OF DEFECTS

Sec.
557.1 Scope.
557.2 Purpose.
557.3 General.
557.4 Requirements for petition.
557.5 Improperly filed petitions.
557.6 Determination whether to hold a public hearing.
557.7 Public hearing.
557.8 Determination of manufacturer's obligation.

AUTHORITY: Sec. 9, Pub. L. 89–670, 80 Stat. 931 (49 U.S.C. 1657); sec. 103, 119, Pub. L. 89–563, 80 Stat. 718 (15 U.S.C. 1392, 1407); sec. 156, Pub. L. 93–492, 88 Stat. 1470 (15 U.S.C 1416); delegation of authority at 49 CFR 1.50).

SOURCE: 41 FR 56812, Dec. 30, 1976, unless otherwise noted.

§ 557.1 Scope.

This part establishes procedures under section 156 of the National Traffic and Motor Vehicle Safety Act of 1966, as amended (88 Stat. 1470, 15 U.S.C. 1416), for the submission and disposition of petitions filed by interested persons for hearings on the question of whether a manufacturer has reasonably met his obligation to notify owners, purchasers, and dealers of a safety-related defect or failure to comply with a Federal motor vehicle safety standard, or to remedy such defect or failure to comply. This part also establishes procedures for holding a hearing on these questions.

§ 557.2 Purpose.

The purpose of this part is to enable the National Highway Traffic Safety Administration to identify and respond on a timely basis to petitions for hearings on whether a manufacturer has reasonably met his obligation to notify or remedy, and to establish the procedures for such hearings.

§ 557.3 General.

Any interested person may file with the Administrator a petition requesting him to hold a hearing on—

(a) Whether a manufacturer has reasonably met his obligation to notify owners, purchasers, and dealers of a safety-related defect in any motor vehicle or item of replacement equipment manufactured by him;

(b) Whether a manufacturer has reasonably met his obligation to notify owners, purchasers, and dealers of a failure to comply with an applicable Federal motor vehicle safety standard in any motor vehicle or item of replacement equipment manufactured by him;

(c) Whether the manufacturer has reasonably met his obligation to remedy a safety-related defect in any motor vehicle or item of replacement equipment manufactured by him; or

(d) Whether the manufacturer has reasonably met his obligation to remedy a failure to comply with an applicable Federal motor vehicle safety standard in any motor vehicle or item of replacement equipment manufactured by him.

§ 557.4 Requirements for petition.

A petition filed under this part should be addressed and submitted to: Administrator, National Highway Traffic Safety Administration, 400 Seventh Street, SW., Washington, DC 20590. Each petition filed under this part must—

(a) Be written in the English or Spanish language;

(b) Have, preceding its text, the word ''Petition'';

(c) Contain a brief statement concerning the alleged failure of a manufacturer to meet reasonably his obligation to notify or remedy;

(d) Contain a brief summary of the data, views, or arguments that the petitioner wishes to present in a hearing on whether or not a manufacturer has reasonably met his obligations to notify or remedy;

(e) Specifically request a hearing.

§ 557.5 Improperly filed petitions.

(a) A petition that is not addressed as specified in § 557.4, but that meets the other requirements of that section, will be treated as a properly filed petition, received as of the time it is discovered and identified.

(b) A document that fails to conform to one or more of the requirements of § 557.4(a) (1) through (5) will not be treated as a petition under this part.

Such a document will be treated according to the existing correspondence and other procedures of the NHTSA, and any information contained in it will be considered at the discretion of the Administrator.

§ 557.6 Determination whether to hold a public hearing.

(a) The Administrator considers the following factors in determining whether to hold a hearing:

(1) The nature of the complaint;

(2) The seriousness of the alleged breach of obligation to remedy;

(3) The existence of similar complaints;

(4) The ability of the NHTSA to resolve the problem without holding a hearing; and

(5) Other pertinent matters.

(b) If, after considering the above factors, the Administrator determines that a hearing should be held, the petition is granted. If it is determined that a hearing should not be held, the petition is denied. In either case, the petitioner is notified of the grant or denial not more than 60 days after receipt of the petition by the NHTSA.

(c) If a petition submitted under this part is denied, a FEDERAL REGISTER notice of the denial is issued within 45 days of the denial, setting forth the reasons for it.

(d) The Administrator may conduct a hearing under this part on his own motion.

§ 557.7 Public hearing.

If the Administrator decides that a public hearing under this part is necessary, he issues a notice of public hearing in the FEDERAL REGISTER, to advise interested persons of the time, place, and subject matter of the public hearing and invite their participation. Interested persons may submit their views through oral or written presentation, or both. There is no cross-examination of witnesses. A transcript of the hearing is kept and exhibits may be accepted as part of the transcript. Sections 556 and 557 of title 5, U.S.C., do not apply to hearings held under this part. When appropriate, the Chief Counsel designates a member of his staff to serve as legal officer at the hearing.

§ 557.8 Determination of manufacturer's obligation.

If the Administrator determines, on the basis of the information presented at a hearing or any other information that is available to him, that the manufacturer has not reasonably met his obligation to notify owners, dealers, and purchasers of a safety-related defect or failure to comply with a Federal motor vehicle safety standard or to remedy such defect or failure to comply, he orders the manufacturer to take specified action to comply with his obligation, consistent with the authority granted the Administrator by the Act.

PART 564—REPLACEABLE LIGHT SOURCE INFORMATION

Sec.

564.1 Scope.
564.2 Purposes.
564.3 Applicability.
564.4 Definitions.
564.5 Information filing; agency processing of filings.
APPENDIX A TO PART 564—INFORMATION TO BE SUBMITTED FOR REPLACEABLE LIGHT SOURCES
APPENDIX B TO PART 564—INFORMATION TO BE SUBMITTED FOR LONG LIFE REPLACEABLE LIGHT SOURCES OF LIMITED DEFINITION

AUTHORITY: 49 U.S.C. 322, 30111, 30115, 30117, 30166; delegation of authority at 49 CFR 1.50.

SOURCE: 58 FR 3860, Jan. 12, 1993, unless otherwise noted.

§ 564.1 Scope.

This part requires the submission of dimensional, electrical specification, and marking/designation information, as specified in Appendix A and Appendix B of this part, for original equipment replaceable light sources used in motor vehicle headlighting systems.

[61 FR 20500, May 7, 1996]

§ 564.2 Purposes.

The purposes of this part are achieved through its Appendices:

(a) The purposes of Appendix A of this part are to ensure

(1) The availability to replacement light source manufacturers of the manufacturing specifications of original

equipment light sources so that replacement light sources are interchangeable with original equipment light sources and provide equivalent performance, and

(2) That redesigned or newly developed light sources are designated as distinct, different, and noninterchangeable with previously existing light sources.

(b) The purposes of Appendix B of this part are to ensure

(1) That original equipment light sources are replaceable and that replacement light sources provide equivalent performance, and

(2) That redesignated or newly developed light sources are designated as distinct, different, and noninterchangeable with previously existing light sources.

[61 FR 20500, May 7, 1996]

§ 564.3 Applicability.

This part applies to replaceable light sources used as original equipment in motor vehicle headlighting systems.

[60 FR 14228, Mar. 16, 1995]

§ 564.4 Definitions.

All terms defined in the Act and the regulations and standards issued under its authority are used as defined therein.

§ 564.5 Information filing; agency processing of filings.

(a) Each manufacturer of a motor vehicle, original equipment headlamp, or original equipment headlamp replaceable light source, which intends to manufacture a replaceable light source as original equipment or to incorporate a replaceable light source in its headlamps or motor vehicles, shall furnish the information specified in Appendix A. If the rated laboratory life of the light source is not less than 2,000 hours, the manufacturer shall furnish the information specified in either Appendix A or Appendix B of this part. Information shall be furnished to: Associate Administrator for Safety Performance Standards, National Highway Traffic Safety Administration, 400 Seventh Street SW, Washington, D.C. 20590. Attention: Part 564—Replaceable Light Source Information (unless the agency has already filed such information in Docket No. NHTSA 98–3397).

(b) The manufacturer shall submit such information not later than 60 days before it intends to begin the manufacture of the replaceable light source to which the information applies, or to incorporate the light source into a headlamp or motor vehicle of its manufacture. Each submission shall consist of one original set of information and 10 legible reproduced copies, all on 8½ by 11-inch paper.

(c) The Associate Administrator promptly reviews each submission and informs the manufacturer not later than 30 days after its receipt whether the submission has been accepted. Upon acceptance, the Associate Administrator files the information in Docket No. NHTSA 98–3397. The Associate Administrator does not accept any submission that does not contain all the information specified in Appendix A or Appendix B of this part, or whose accompanying information indicates that any new light source which is the subject of a submission is interchangeable with any replaceable light source for which the agency has previously filed information in Docket No. NHTSA 98–3397.

(d) A manufacturer may request modification of a light source for which information has previously been filed in Docket No. NHTSA 98–3397, and the submission shall be processed in the manner provided by § 564.5(c). A request for modification shall contain the following:

(1) All the information specified in Appendix A or Appendix B of this part that is relevant to the modification requested,

(2) The reason for the requested modification,

(3) A statement that use of the light source as modified will not create a noncompliance with any requirement of Motor Vehicle Safety Standard No. 108 (49 CFR 571.108) when used to replace an unmodified light source in a headlamp certified by its manufacturer as conforming to all applicable Federal motor vehicle safety standards, together with reasons in support of the statement; and

(4) Information demonstrating that the modification would not adversely

affect interchangeability with the original light source.

After review of the request for modification, the Associate Administrator may seek further information either from the manufacturer or through a notice published in the FEDERAL REGISTER requesting comment on whether a modified light source incorporating the changes requested will create a noncompliance with Motor Vehicle Safety Standard No. 108 when substituted for an unmodified light source. If the Associate Administrator seeks comment public comment on a submission, (s)he shall publish a further notice stating whether (s)he has accepted or rejected the submission. If a submission is accepted, the Associate Administrator files the information in Docket No. NHTSA 98–3397. If a submission is rejected, a manufacturer may submit information with respect to it, as provided in paragraph 564.5(a), for consideration as a new light source after such changes as will ensure that it is not interchangeable with the light source for which modification was originally requested.

(e) Information submitted under this section is made available by NHTSA for public inspection as soon as practicable after its receipt, but not later than the date on which a vehicle equipped with a new or revised replaceable light source is offered for sale.

[60 FR 14228, Mar. 16, 1995, as amended at 61 FR 20500, May 7, 1996; 63 FR 42587, Aug. 10, 1998]

APPENDIX A TO PART 564—INFORMATION TO BE SUBMITTED FOR REPLACEABLE LIGHT SOURCES

I. *Filament or Discharge Arc Position Dimensions and Tolerances Using Either Direct Filament or Discharge Arc Dimensions or the Three Dimensional Filament or Discharge Arc Tolerance Box.*

A. Lower beam filament dimensions or filament tolerance box dimensions and relation of these to the bulb base reference plane and centerline.

1. Axial location of the filament centerline or the filament tolerance box relative to the bulb base reference plane.

2. Vertical location of the filament centerline or the filament tolerance box relative to the bulb base centerline.

3. Transverse location of the filament centerline or the filament tolerance box relative to the bulb base centerline.

4. Filament tolerance box dimensions, if used.

B. Upper beam filament dimensions or the filament tolerance box dimensions, and relation of these to the bulb base reference plane and centerline.

1. Axial location of the filament centerline or the filament tolerance box relative to the bulb base reference plane.

2. Vertical location of the filament centerline or the filament tolerance box relative to the bulb base centerline.

3. Transverse location of the filament centerline or the filament tolerance box relative to the bulb base centerline.

4. Filament tolerance box dimensions, if used.

C. If the replaceable light source has both a lower beam and an upper beam filament, the dimensional relationship between the two filament centerlines or the filament tolerance boxes may be provided instead of referencing the upper beam filament centerline or filament tolerance box to the bulb base centerline or reference plane.

D. For a light source using excited gas mixtures as a filament, necessary fiducial information and specifications including electrode position dimensions and tolerance information that provide similar location and characteristics information required by paragraphs A, B, and C of this section I for light sources using a resistive type filament.

II. *Dimensions Pertaining to Filament Capsule and Capsule Supports*

A. Maximum length from bulb base reference plane to tip of filament capsule.

B. Maximum radial distances from bulb base centerline to periphery of filament capsule and/or supports.

C. Location of black cap relative to low beam filament centerline, filament tolerance box or other to-be-specified reference.

D. Size, length, shape, or other pertinent features and dimensions for providing undistorted walls for the filament capsule.

III. *Bulb Base Interchangeability Dimensions and Tolerance*

A. Angular locations, diameters, key/keyway sizes, and any other interchangeability dimensions for indexing the bulb base in the bulb holder.

B. Diameter, width, depth, and surface finish of seal groove, surface, or other pertinent sealing features.

C. Diameter of the bulb base at the interface of the base and its perpendicular reference surface.

D. Dimensions of features related to retention of the bulb base in the bulb holder such as tabs, keys, keyways, surfaces, etc.

IV. *Bulb Holder Interchangeability Dimensions and Tolerance*

A. Mating angular locations, diameters, key/keyway sizes, and any other interchangeability dimensions for indexing the bulb base in the bulb holder.

B. Mating diameter, width, depth, and surface finish of seal groove, surface, or other pertinent sealing features.

C. Mating diameter of the bulb holder at the interface of the bulb base aperture and its perpendicular reference surface.

D. Mating dimensions of features related to retention of the bulb base in the bulb holder such as tabs, keys, keyways, surfaces, etc.

V. *Wiring Harness Connector to Bulb Base Interchangeability Dimensions and Tolerances*

A. Maximum depth of harness connector insertion into bulb base.

B. Location of electrical pins in bulb base.

C. Dimensions of electrical pins in bulb base—length, diameter, width, thickness and etc.

D. Fit of harness connector into bulb base providing all necessary dimensions, key/keyway controls, and dimensions, tapers etc.

E. Dimensions and location of locking features for wiring harness connector to bulb base.

F. Identification of upper beam, lower beam, and common terminals.

VI. SEAL SPECIFICATIONS (IF REPLACEABLE LIGHT SOURCE IS INTENDED TO BE OF A SEALED BASE DESIGN)

A. Type.

B. Material.

C. Dimensions.

VII. *Electrical Specifications for Each Filament at 12.8 Volts*

A. Maximum power (in watts).

B. Luminous Flux with tolerance (in lumens) with black cap if so equipped, measured in accordance with the document: Illuminating Engineering Society of North America, LM–45; IES Approved Method for Electrical and Photometric Measurements of General Service Incandescent Filament Lamps (April 1980).

VIII. *Bulb Markings/Designation*— ANSI NUMBER, ECE IDENTIFIER, MANUFACTURER'S PART NUMBER, INDIVIDUALLY OR IN ANY COMBINATION

IX. *All other information, dimensions or performance specifications necessary for interchangeability, replaceability, or system test purposes not listed in sections I through VIII.* IF A BALLAST IS REQUIRED FOR OPERATION, A COMPLETE LISTING OF THE REQUIREMENTS AND PARAMETERS BETWEEN THE LIGHT SOURCE AND BALLAST, AND BALLAST AND THE VEHICLE SHALL ALSO BE PROVIDED.

[58 FR 3860, Jan. 12, 1993, as amended at 61 FR 20500, 20501, May 7, 1996]

APPENDIX B TO PART 564—INFORMATION TO BE SUBMITTED FOR LONG LIFE REPLACEABLE LIGHT SOURCES OF LIMITED DEFINITION

I. *Filament or Discharge Arc Position Dimensions and Tolerances Using Either Direct Filament or Discharge Arc Dimensions or the Three Dimensional Filament Discharge Arc Tolerance Box.*

A. Lower beam filament or discharge arc dimensions or filament or discharge arc tolerance box dimensions and relation of these to the bulb base reference plane and centerline.

1. Axial location of the filament or discharge arc centerline or the filament or discharge arc tolerance box relative to the bulb base reference plane.

2. Vertical location of the filament or discharge arc centerline or the filament or discharge arc tolerance box relative to the bulb base centerline.

3. Transverse location of the filament or discharge arc centerline or the filament or discharge arc tolerance box relative to the bulb base centerline.

4. Filament or discharge arc tolerance box dimensions, if used.

B. Upper beam filament or discharge arc dimensions or the filament or discharge arc tolerance box dimensions and relation of these to the bulb base reference plane and centerline.

1. Axial location of the filament or discharge arc centerline or the filament or discharge arc tolerance box relative to the bulb base reference plane.

2. Vertical location of the filament or discharge arc centerline or the filament or discharge arc tolerance box relative to the bulb base centerline.

3. Transverse location of the filament or discharge arc centerline or the filament or discharge arc tolerance box relative to the bulb base centerline.

4. Filament or discharge arc tolerance box dimensions, if used.

C. If the replaceable light source has both a lower beam and upper beam filament or discharge arc, the dimensional relationship between the two filament or discharge arc centerlines or the filament or discharge arc tolerance boxes may be provided instead of referencing the upper beam filament or discharge arc centerline or filament or discharge arc tolerance box to the bulb base centerline or reference plane.

D. For a light source using excited gas mixtures as a filament, necessary fiducial information and specifications including electrode position dimensions, and tolerance information that provide similar location and characteristics information required by paragraphs A, B, and C of this section I for light sources using a resistive type filament.

II. *Bulb Base Interchangeability Dimensions and Tolerance.*

A. Angular locations, diameters, key/keyway sizes, and any other interchangeability dimensions for indexing the bulb base in the bulb holder.

B. Diameter, width, depth, and surface finish of seal groove, surface, or other pertinent sealing features.

C. Diameter of the bulb base at the interface of the base and its perpendicular reference surface.

D. Dimensions of features related to retention of the bulb base in the bulb holder such as tabs, keys, keyways, surface, etc.

III. *Bulb Holder Interchangeability Dimensions and Tolerances.*

A. Mating angular locations, diameters, key/keyway sizes, any other interchangeability dimensions for indexing the bulb base in the bulb holder.

B. Mating diameter, width, depth, and surface, or other pertinent sealing features.

C. Mating diameter of the bulb holder at the interface of the bulb base aperture and its perpendicular reference surface.

D. Mating dimensions of features related to retention of the bulb base in the bulb holder such as tabs, keys, keyways, surface, or any other characteristics necessary for mating dimensions.

IV. *Electrical Specifications for Each Light Source that Operates With a Ballast and Rated Life of the Light Source/Ballast Combination.*

A. Maximum power (in watts).

B. Luminous Flux (in lumens).

C. Rated laboratory life of the light source/ballast combination (not less than 2,000 hours).

V. *Applicable to Light Sources that Operate With a Source Voltage Other Than 12.8 Volts Direct Current, and When a Proprietary Ballast Must Be Used With the Light Source.*

A. Manufacturer's part number for the ballast.

B. Any other characteristics necessary for system operation.

VI. *Bulb Markings/Designation*— ANSI NUMBER, ECE IDENTIFIER, MANUFACTURER'S PART NUMBER, INDIVIDUAL OR IN ANY COMBINATION.

VII. *All other identification, dimensions or performance specifications necessary for replaceability or systems test not listed in sections I through VI.*

[61 FR 20500, May 7, 1996]

PART 565—VEHICLE IDENTIFICATION NUMBER REQUIREMENTS

Sec.
565.1 Purpose and scope.
565.2 Applicability.
565.3 Definitions.
565.4 General requirements.
565.5 Motor vehicles imported into the United States.
565.6 Content requirements.
565.7 Reporting requirements.

AUTHORITY: 49 U.S.C. 322, 30111, 30115, 30117, 30141, 30146, 30166, and 30168; delegation of authority at 49 CFR 1.50.

[61 FR 29033, June 7, 1996]

§ 565.1 Purpose and scope.

This part specifies the format, content and physical requirements for a vehicle identification number (VIN) system and its installation to simplify vehicle identification information retrieval and to increase the accuracy and efficiency of vehicle recall campaigns.

§ 565.2 Applicability.

This part applies to passenger cars, multipurpose passenger vehicles, trucks, buses, trailers (including trailer kits), incomplete vehicles, and motorcycles. Vehicles imported into the United States under 49 CFR 591.5(f), other than by the corporation responsible for the assembly of that vehicle or a subsidiary of such a corporation, are excluded from requirements of § 565.4(b), § 565.4(c), § 565.4(g), § 565.4(h), § 565.5 and § 565.6.

§ 565.3 Definitions.

(a) *Federal Motor Vehicle Safety Standards Definitions.* Unless otherwise indicated, all terms used in this part that are defined in 49 CFR 571.3 are used as defined in 49 CFR 571.3.

(b) *Body type* means the general configuration or shape of a vehicle distinguished by such characteristics as the number of doors or windows, cargo-carrying features and the roofline (e.g., sedan, fastback, hatchback).

(c) *Check digit* means a single number or the letter X used to verify the accuracy of the transcription of the vehicle identification number.

(d) *Engine type* means a power source with defined characteristics such as fuel utilized, number of cylinders, displacement, and net brake horsepower. The specific manufacturer and make shall be represented if the engine powers a passenger car or a multipurpose passenger vehicle, or truck with a gross vehicle weight rating of 4536 kg. (10,000 lbs.) or less.

(e) *Incomplete vehicle* means an assemblage consisting, as a minimum, of frame and chassis structure, power train, steering system, suspension system and braking system, to the extent that those systems are to be part of the completed vehicle, that requires further manufacturing operations, other than the addition of readily attachable components, such as mirrors or tire and rim assemblies, or minor finishing operations such as painting, to become a completed vehicle.

(f) *Line* means a name that a manufacturer applies to a family of vehicles within a make which have a degree of commonality in construction, such as body, chassis or cab type.

(g) *Make* means a name that a manufacturer applies to a group of vehicles or engines.

(h) *Manufacturer* means a person—

(1) *Manufacturing* or assembling motor vehicles or motor vehicle equipment; or

(2) Importing motor vehicles or motor vehicle equipment for resale.

(i) *Model* means a name that a manufacturer applies to a family of vehicles of the same type, make, line, series and body type.

(j) *Model Year* means the year used to designate a discrete vehicle model, irrespective of the calendar year in which the vehicle was actually produced, so long as the actual period is less than two calendar years.

(k) *Plant of manufacture* means the plant where the manufacturer affixes the VIN.

(l) *Series* means a name that a manufacturer applies to a subdivision of a ''line'' denoting price, size or weight identification and that is used by the manufacturer for marketing purposes.

(m) *Trailer kit* means a trailer that is fabricated and delivered in complete but unassembled form and that is designed to be assembled without special machinery or tools.

(n) *Type* means a class of vehicle distinguished by common traits, including design and purpose. Passenger cars, multipurpose passenger vehicles, trucks, buses, trailers, incomplete vehicles and motorcycles are separate types.

(o) *VIN* means a series of Arabic numbers and Roman letters that is assigned to a motor vehicle for identification purposes.

§ 565.4 General requirements.

(a) Each vehicle manufactured in one stage shall have a VIN that is assigned by the manufacturer. Each vehicle manufactured in more than one stage shall have a VIN assigned by the incomplete vehicle manufacturer. Vehicle alterers, as specified in 49 CFR 567.7, shall utilize the VIN assigned by the original manufacturer of the vehicle.

(b) Each VIN shall consist of seventeen (17) characters.

(c) A check digit shall be part of each VIN. The check digit shall appear in position nine (9) of the VIN, on the vehicle and on any transfer documents containing the VIN prepared by the manufacturer to be given to the first owner for purposes other than resale.

(d) The VINs of any two vehicles manufactured within a 30-year period shall not be identical.

(e) The VIN of each vehicle shall appear clearly and indelibly upon either a part of the vehicle, other than the glazing, that is not designed to be removed except for repair or upon a separate plate or label that is permanently affixed to such a part.

(f) The VIN for passenger cars, multipurpose passenger vehicles and trucks of 4536 kg or less GVWR shall be located inside the passenger compartment. It shall be readable, without moving any part of the vehicle, through the vehicle glazing under daylight lighting conditions by an observer having 20/20 vision (Snellen) whose eye-point is located outside the vehicle adjacent to the left windshield pillar. Each character in the VIN subject to this paragraph shall have a minimum height of 4 mm.

(g) Each character in each VIN shall be one of the letters in the set: [ABCDEFGHJKLMNPRSTUVWXYZ] or a numeral in the set: [0123456789] assigned according to the method given in § 565.5.

(h) All spaces provided for in the VIN must be occupied by a character specified in paragraph (g) of this section.

(i) The type face utilized for each VIN shall consist of capital, sanserif characters.

§ 565.5 Motor vehicles imported into the United States.

(a) Importers shall utilize the VIN assigned by the original manufacturer of the motor vehicle.

(b) A passenger car certified by a Registered Importer under 49 CFR part 592 shall have a plate or label that contains the following statement, in characters with a minimum height of 4 mm, with the identification number assigned by the original manufacturer provided in the blank: SUBSTITUTE FOR U.S. VIN: _____ SEE PART 565. The plate or label shall conform to § 565.4 (h) and (i). The plate or label shall be permanently affixed inside the passenger compartment. The plate or label shall be readable, without moving any part of the vehicle, through the vehicle glazing under daylight lighting conditions by an observer having 20/20 vision (Snellen) whose eye-point is located outside the vehicle adjacent to the left windshield pillar. It shall be located in such a manner as not to cover, obscure, or overlay any part of any identification number affixed by the original manufacturer. Passenger cars conforming to Canadian Motor Vehicle Safety Standard 115 are exempt from this paragraph.

§ 565.6 Content requirements.

The VIN shall consist of four sections of characters which shall be grouped accordingly:

(a) The first section shall consist of three characters that occupy positions one through three (1–3) in the VIN. This section shall uniquely identify the manufacturer, make and type of the motor vehicle if its manufacturer produces 500 or more motor vehicles of its type annually. If the manufacturer produces less than 500 motor vehicles of its type annually, these characters along with the third, fourth and fifth characters of the fourth section shall uniquely identify the manufacturer, make and type of the motor vehicle. These characters are assigned in accordance with § 565.7(a).

(b) The second section shall consist of five characters, which occupy positions four through eight (4–8) in the VIN. This section shall uniquely identify the attributes of the vehicle as specified in Table I. For passenger cars, and for multipurpose passenger vehicles and trucks with a gross vehicle weight rating of 4536 kg. (10,000 lbs.) or less, the first and second characters shall be alphabetic and the third and fourth characters shall be numeric. The fifth character may be either alphabetic or numeric. The characters utilized and their placement within the section may be determined by the manufacturer, but the specified attributes must be decipherable with information supplied by the manufacturer in accordance with § 565.7(c). In submitting the required information to NHTSA relating to gross vehicle weight rating, the designations in Table II shall be used. The use of these designations within the VIN itself is not required. Tables I and II follow:

TABLE I—TYPE OF VEHICLE AND INFORMATION DECIPHERABLE

Passenger car: Line, series, body type, engine type and restraint system type.

Multipurpose passenger vehicle: Line, series, body type, engine type, gross vehicle weight rating.

Truck: Model or line, series, chassis, cab type, engine type, brake system and gross vehicle weight rating.

Bus: Model or line, series, body type, engine type, and brake system

Trailer, including trailer kits and incomplete trailer: Type of trailer, body type, length and axle configuration.

Motorcycle: Type of motorcycle, line, engine type, and net brake horsepower.

Incomplete Vehicle other than a trailer: Model or line, series, cab type, engine type and brake system.

NOTE TO TABLE I: Engine net brake horsepower when encoded in the VIN shall differ by no more than 10 percent from the actual net brake horsepower; shall in the case of motorcycle with an actual net brake horsepower of 2 or less, be not more than 2; and shall be greater than 2 in the case of a motorcycle with an actual brake horsepower greater than 2.

TABLE II—GROSS VEHICLE WEIGHT RATING CLASSES

Class A—Not greater than 1360 kg. (3,000 lbs.)

Class B—Greater than 1360 kg. to 1814 kg. (3,001–4,000 lbs.)

Class C—Greater than 1814 kg. to 2268 kg. (4,001–5,000 lbs.)

Class D—Greater than 2268 kg. to 2722 kg. (5,001–6,000 lbs.)

Class E—Greater than 2722 kg. to 3175 kg. (6,001–7,000 lbs.)

Class F—Greater than 3175 kg. to 3629 kg. (7,001–8,000 lbs.)

Class G—Greater than 3629 kg. to 4082 kg. (8,001–9,000 lbs.)

Class H—Greater than 4082 kg. to 4536 kg. (9,001–10,000 lbs.)

Class 3—Greater than 4536 kg. to 6350 kg. (10,001–14,000 lbs.)

Class 4—Greater than 6350 kg. to 7257 kg. (14,001–16,000 lbs.)

Class 5—Greater than 7257 kg. to 8845 kg. (16,001–19,500 lbs.)

Class 6—Greater than 8845 kg. to 11793 kg. (19,501–26,000 lbs.)

Class 7—Greater than 11793 kg. to 14968 kg.(26,001–33,000 lbs.)

Class 8—Greater than 14968 kg. (33,001 lbs. and over)

(c) The third section shall consist of one character, which occupies position nine (9) in the VIN. This section shall be the check digit whose purpose is to provide a means for verifying the accuracy of any VIN transcription. After all other characters in VIN have been determined by the manufacturer, the check digit shall be calculated by carrying out the mathematical computation specified in paragraphs (c) (1) through (4) of this section.

(1) Assign to each number in the VIN its actual mathematical value and assign to each letter the value specified for it in Table III, as follows:

TABLE III—ASSIGNED VALUES

A = 1
B = 2
C = 3
D = 4
E = 5
F = 6
G = 7
H = 8
J = 1
K = 2
L = 3
M = 4
N = 5
P = 7
R = 9
S = 2
T = 3
U = 4
V = 5
W = 6
X = 7
Y = 8
Z = 9

(2) Multiply the assigned value for each character in the VIN by the position weight factor specified in Table IV, as follows:

TABLE IV—VIN POSITION AND WEIGHT FACTOR

1st	8
2d	7
3d	6
4th	5
5th	4
6th	3
7th	2
8th	10
9th	(check digit)
10th	9
11th	8
12th	7
13th	6
14th	5
15th	4
16th	3
17th	2

(3) Add the resulting products and divide the total by 11.

(4) The numerical remainder is the check digit. If the remainder is 10 the

letter ''X'' shall be used to designate the check digit. The correct numeric remainder, zero through nine (0–9) or the letter ''X,'' shall appear in VIN position nine (9).

(5) A sample check digit calculation is shown in Table V as follows:

TABLE V—CALCULATION OF A CHECK DIGIT

VIN Position	1	2	3	4	5	6	7	8	9	10	11	12	13	14	15	16	17
Sample VIN	1	G	4	A	H	5	9	H	...	5	G	1	1	8	3	4	1
Assigned Value	1	7	4	1	8	5	9	8	...	5	7	1	1	8	3	4	1
Weight Factor	8	7	6	5	4	3	2	10	0	9	8	7	6	5	4	3	2
Multiply Assigned value times weight factor	8	49	24	5	32	15	18	80	0	45	56	7	6	40	12	12	2

Add products: 8+49+24+5+32+15+18+80+0+45+56+7+6+40+12+12+2 = 411
Divide by 11: 411/11 = 37 4/11
The remainder is 4; this is the check digit to be inserted in position nine (9) of the VIN

(d) The fourth section shall consist of eight characters, which occupy positions ten through seventeen (10–17) of the VIN. The last five (5) characters of this section shall be numeric for passenger cars and for multipurpose passenger vehicles and trucks with a gross vehicle weight rating of 4536 kg. (10,000 lbs.) or less, and the last four (4) characters shall be numeric for all other vehicles.

(1) The first character of the fourth section shall represent the vehicle model year. The year shall be designated as indicated in Table VI as follows:

TABLE VI—YEAR CODES FOR VIN

Year	Code
1980	A
1981	B
1982	C
1983	D
1984	E
1985	F
1986	G
1987	H
1988	J
1989	K
1990	L
1991	M
1992	N
1993	P
1994	R
1995	S
1996	T
1997	V
1998	W
1999	X
2000	Y
2001	1
2002	2
2003	3
2004	4
2005	5
2006	6
2007	7
2008	8
2009	9
2010	A
2011	B
2012	C

TABLE VI—YEAR CODES FOR VIN—Continued

Year	Code
2013	D

(2) The second character of the fourth section shall represent the plant of manufacture.

(3) The third through the eighth characters of the fourth section shall represent the number sequentially assigned by the manufacturer in the production process if the manufacturer produces 500 or more vehicles of its type annually. If the manufacturer produces less than 500 motor vehicles of its type annually, the third, fourth and fifth characters of the fourth section, combined with the three characters of the first section, shall uniquely identify the manufacturer, make and type of the motor vehicle and the sixth, seventh, and eighth characters of the fourth section shall represent the number sequentially assigned by the manufacturer in the production process.

§ 565.7 Reporting requirements.

The information collection requirements contained in this part have been approved by the Office of Management and Budget under the provisions of the Paperwork Reduction Act (44 U.S.C. 3501 *et seq.*) and have been assigned OMB Control Number 2127–0510.

(a) The National Highway Traffic Safety Administration (NHTSA) has contracted with the Society of Automotive Engineers (SAE) to coordinate the assignment of manufacturer identifiers. Manufacturer identifiers will be supplied by SAE at no charge. All requests for assignments of manufacturer identifiers should be forwarded directly to: Society of Automotive Engineers,

400 Commonwealth Avenue, Warrendale, Pennsylvania 15096, Attention: WMI Coordinator. Any requests for identifiers submitted to NHTSA will be forwarded to SAE. Manufacturers may request a specific identifier or may request only assignment of an identifier(s). SAE will review requests for specific identifiers to determine that they do not conflict with an identifier already assigned or block of identifiers already reserved. SAE will confirm the assignments in writing to the requester. Once confirmed by SAE, the identifier need not be resubmitted to NHTSA.

(b) Manufacturers of vehicles subject to this part shall submit, either directly or through an agent, the unique identifier for each make and type of vehicle it manufactures at least 60 days before affixing the first VIN using the identifier. Manufacturers whose unique identifier appears in the fourth section of the VIN shall also submit the three characters of the first section that constitutes a part of their identifier.

(c) Manufacturers of vehicles subject to the requirements of this part shall submit to NHTSA the information necessary to decipher the characters contained in its VINs. Amendments to this information shall be submitted to the agency for VINs containing an amended coding. The agency will not routinely provide written approvals of these submissions, but will contact the manufacturer should any corrections to these submissions be necessary.

(d) The information required under paragraph (c) of this section shall be submitted at least 60 days prior to offering for sale the first vehicle identified by a VIN containing that information, or if information concerning vehicle characteristics sufficient to specify the VIN code is unavailable to the manufacturer by that date, then within one week after that information first becomes available. The information shall be addressed to: Administrator, National Highway Traffic Safety Administration, 400 Seventh Street, SW., Washington, DC 20590, Attention: VIN Coordinator.

PART 566—MANUFACTURER IDENTIFICATION

Sec.
566.1 Scope.
566.2 Purpose.
566.3 Application.
566.4 Definitions.
566.5 Requirements.
566.6 Submittal of information.

AUTHORITY: Secs. 112 and 119, National Traffic and Motor Vehicle Safety Act (15 U.S.C. 1401 and 1407); delegation of authority at 49 CFR 1.50.

§ 566.1 Scope.

This part requires manufacturers of motor vehicles, and of motor vehicle equipment to which a motor vehicle safety standard applies, to submit identifying information and a description of the items they produce.

[36 FR 20978, Nov. 2, 1971]

§ 566.2 Purpose.

The purpose of this part is to facilitate the regulation of manufacturers under the National Traffic and Motor Vehicle Safety Act, and to aid in establishing a code numbering system for all regulated manufacturers.

[36 FR 20978, Nov. 2, 1971]

§ 566.3 Application.

This part applies to all manufacturers of motor vehicles, and to manufacturers of motor vehicle equipment, other than tires, to which a motor vehicle safety standard applies (hereafter referred to as ''covered equipment'').

[36 FR 22063, Nov. 19, 1971]

§ 566.4 Definitions.

All terms defined in the Act and the rules and standards issued under its authority are used as defined therein. Specifically, *incomplete vehicle*, *intermediate manufacturer*, and *final-stage manufacturer* are used as defined in Part 568—Vehicles Manufactured in Two or More Stages.

(Authority: 15 U.S.C. 1392, 1397)

[37 FR 1364, Jan. 28, 1972]

§ 566.5 Requirements.

Each manufacturer of motor vehicles, and each manufacturer of covered equipment, shall furnish the information specified in paragraphs (a) through (c) of this section to: Administrator, National Highway Traffic Safety Administration, 400 Seventh Street SW., Washington, DC 20590.

(a) Full individual, partnership, or corporate name of the manufacturer.

(b) Residence address of the manufacturer and State of incorporation if applicable.

(c) Description of each type of motor vehicle or of covered equipment manufactured by the manufacturer, including, for motor vehicles, the approximate ranges of gross vehicle weight ratings for each type.

(1) Except as noted below, the description may be of general types, such as ''passenger cars'' or ''brake fluid.''

(2) In the case of multipurpose passenger vehicles, trucks, and trailers, the description shall be specific enough also to indicate the types of use for which the vehicles are intended, such as ''tank trailer,'' ''motor home,'' or ''cargo van.''

(3) In the case of motor vehicles produced in two or more stages, if the manufacturer is an incomplete vehicle manufacturer, the description shall so state and include a description indicating the stage of completion of the vehicle and, where known, the types of use for which the vehicle is intended.

Example: ''Incomplete vehicle manufacturer—Chassis-cab intended for completion as van-type truck.''

If the manufacturer is an intermediate manufacturer, or a final stage manufacturer, the description shall so state and include a brief description of the work performed.

Example: ''Multipurpose passenger vehicles: Motor homes with GVWR from 8,000 to 12,000 pounds. Final-stage manufacturer—add body to bare chassis.''

(15 U.S.C. 1392, 1397)

[36 FR 20978, Nov. 2, 1971, as amended at 37 FR 1364, Jan. 28, 1972]

§ 566.6 Submittal of information.

Each manufacturer required to submit information under § 566.5 shall submit the information not later than February 1, 1972. After that date, each person who begins to manufacture a type of motor vehicle or covered equipment for which he has not submitted the required information shall submit the information specified in paragraphs (a) through (c) of § 566.5 not later than 30 days after he begins manufacture. Each manufacturer who has submitted required information shall keep his entry current, accurate and complete by submitting revised information not later than 30 days after the relevant changes in his business occur.

[36 FR 20978, Nov. 2, 1971, as amended at 53 FR 20119, June 2, 1988]

PART 567—CERTIFICATION

Sec.
567.1 Purpose.
567.2 Application.
567.3 Definitions.
567.4 Requirements for manufacturers of motor vehicles.
567.5 Requirements for manufacturers of vehicles manufactured in two or more stages.
567.6 Requirements for persons who do not alter certified vehicles or do so with readily attachable components.
567.7 Requirements for persons who alter certified vehicles.

AUTHORITY: 49 U.S.C. 322, 30111, 30115, 30117, 30166, 32502, 32504, 33101–33104, 33108, and 33109; delegation of authority at 49 CFR 1.50

EDITORIAL NOTE: For a ruling concerning unavailable weight ratings, see 36 FR 25013, Dec. 28, 1971.

§ 567.1 Purpose.

The purpose of this part is to specify the content and location of, and other requirements for, the certification label or tag to be affixed to motor vehicles as required by section 114 of the National Traffic and Motor Vehicle Safety Act of 1966 (15 U.S.C. 1403) (the Safety Act) and by sections 105(c)(1) and 606(c) of the Motor Vehicle Information and Cost Savings Act (15 U.S.C. 1915(c) and 2026(c)) (the Cost Savings Act), and to provide the consumer with information to assist him or her in determining which of the Federal Motor Vehicle Safety Standards (part 571 of this chapter) and Federal Theft Prevention Standards (part 541 of this

chapter) (standards) are applicable to the vehicle.

[50 FR 43192, Oct. 24, 1985]

§ 567.2 Application.

(a) This part applies to manufacturers and distributors of motor vehicles to which one or more standards are applicable.

(b) In the case of imported motor vehicles, the requirement of affixing a label or tag applies to Registered Importers of vehicles admitted to the United States under 49 CFR 591.5(f) to which the required label or tag is not affixed.

[36 FR 7056, Apr. 14, 1971, as amended at 48 FR 46995, Oct. 17, 1983; 56 FR 22356, May 15, 1991]

§ 567.3 Definitions.

All terms that are defined in the Act and the rules and standards issued under its authority are used as defined therein. The term *bumper* has the meaning assigned to it in Title I of the Cost Savings Act and the rules and standards issued under its authority.

Chassis-cab means an incomplete vehicle, with a completed occupant compartment, that requires only the addition of cargo-carrying, work-performing, or load-bearing components to perform its intended functions.

[36 FR 7056, Apr. 14, 1971, as amended at 42 FR 37817, July 25, 1977; 43 FR 21891, May 22, 1978]

§ 567.4 Requirements for manufacturers of motor vehicles.

(a) Each manufacturer of motor vehicles (except vehicles manufactured in two or more stages) shall affix to each vehicle a label, of the type and in the manner described below, containing the statements specified in paragraph (g) of this section.

(b) The label shall, unless riveted, be permanently affixed in such a manner that it cannot be removed without destroying or defacing it.

(c) Except for trailers and motorcycles, the label shall be affixed to either the hinge pillar, door-latch post, or the door edge that meets the door-latch post, next to the driver's seating position, or if none of these locations is practicable, to the left side of the instrument panel. If that location is also not practicable, the label shall be affixed to the inward-facing surface of the door next to the driver's seating position. If none of the preceding locations is practicable, notification of that fact, together with drawings or photographs showing a suggested alternate location in the same general area, shall be submitted for approval to the Administrator, National Highway Traffic Safety Administration, Washington, DC 20590. The location of the label shall be such that it is easily readable without moving any part of the vehicle except an outer door.

(d) The label for trailers shall be affixed to a location on the forward half of the left side, such that it is easily readable from outside the vehicle without moving any part of the vehicle.

(e) The label for motorcycles shall be affixed to a permanent member of the vehicle as close as is practicable to the intersection of the steering post with the handle bars, in a location such that it is easily readable without moving any part of the vehicle except the steering system.

(f) The lettering on the label shall be of a color that contrasts with the background of the label.

(g) The label shall contain the following statements, in the English language, lettered in block capitals and numerals not less than three thirty-seconds of an inch high, in the order shown:

(1) Name of manufacturer: Except as provided in paragraphs (g)(1) (i), (ii), and (iii) of this section, the full corporate or individual name of the actual assembler of the vehicle shall be spelled out, except that such abbreviations as ''Co.'' or ''Inc.'' and their foreign equivalents, and the first and middle initials of individuals, may be used. The name of the manufacturer shall be preceded by the words ''Manufactured By'' or ''Mfd By.'' In the case of imported vehicles, where the label required by this section is affixed by the Registered Importer, the name of the Registered Importer shall also be placed on the label in the manner described in this paragraph, directly below the name of the final assembler.

(i) If a vehicle is assembled by a corporation that is controlled by another

corporation that assumes responsibility for conformity with the standards, the name of the controlling corporation may be used.

(ii) If a vehicle is fabricated and delivered in complete but unassembled form, such that it is designed to be assembled without special machinery or tools, the fabricator of the vehicle may affix the label and name itself as the manufacturer for the purposes of this section.

(iii) If a trailer is sold by a person who is not its manufacturer, but who is engaged in the manufacture of trailers and assumes legal responsibility for all duties and liabilities imposed by the Act with respect to that trailer, the name of that person may appear on the label as the manufacturer. In such a case the name shall be preceded by the words ''Responsible Manufacturer'' or ''Resp Mfr.''

(2) Month and year of manufacture: This shall be the time during which work was completed at the place of main assembly of the vehicle. It may be spelled out, as ''June 1970'', or expressed in numerals, as ''6/70.''

(3) ''Gross Vehicle Weight Rating'' or ''GVWR,'' followed by the appropriate value in pounds, which shall not be less than the sum of the unloaded vehicle weight, rated cargo load, and 150 pounds times the vehicle's designated seating capacity. However, for school buses the minimum occupant weight allowance shall be 120 pounds.

(4) ''Gross Axle Weight Rating'' or ''GAWR,'' followed by the appropriate value in pounds for each axle, identified in order from front to rear (e.g., front, first intermediate, second intermediate, rear). The ratings for any consecutive axles having indentical gross axle weight ratings when equipped with tires having the same tire size designation may, at the option of the manufacturer, be stated as a single value, with label indicating to which axles the ratings apply.

EXAMPLES OF COMBINED RATINGS

GAWR: (a) All axles—4080 with 7.00–15 LT (D) tires.

(b) Front—12,000 with 10.00–20(G) tires.

First intermediate to rear—15,000 with 12.00–20(H) tires.

(5) The statement: ''This vehicle conforms to all applicable Federal motor vehicle safety standards in effect on the date of manufacture shown above.'' The expression ''U.S.'' or ''U.S.A.'' may be inserted before the word ''Federal''.

(i) In the case of passenger cars manufactured on or after September 1, 1978, the expression ''and bumper'' shall be included in the statement following the word ''safety''.

(ii) In the case of 1987 and subsequent model year passenger cars manufactured on or after April 24, 1986, the expression ''safety, bumper, and theft prevention'' shall be substituted in the statement for the word ''safety''.

(iii) In the case of multipurpose passenger vehicles (MPVs) and trucks with a GVWR of 6,000 pounds or less manufactured on or after June 11, 1999, the expression ''and theft prevention'' shall be included in the statement following the word ''safety''.

(6) Vehicle identification number.

(7) The type classification of the vehicle as defined in §571.3 of this chapter (e.g., truck, MPV, bus, trailer).

(h) Multiple GVWR–GAWR ratings. (1) (For passenger cars only) In cases where different tire sizes are offered as a customer option, a manufacturer may at his option list more than one set of values for GVWR and GAWR, in response to the requirements of paragraphs (g) (3) and (4) of this section. If the label shows more than one set of weight rating values, each value shall be followed by the phrase ''with _____ tires,'' inserting the proper tire size designations. A manufacturer may at his option list one or more tire sizes where only one set of weight ratings is provided.

PASSENGER CAR EXAMPLE

GVWR:

4400 LB with G78–14B Tires, 4800 LB with H78–14B Tires.

GAWR:

Front—2000 LB with G78–14B Tires at 24 psi, 2200 LB with H78–14B Tires at 24 psi.

Rear—2400 LB with G78–14B Tires at 28 psi, 2600 LB with H78–14B Tires at 28 psi.

(2) (For multipurpose passenger vehicles, trucks, buses, trailers, and motorcycles) The manufacturer may, at its option, list more than one GVWR–GAWR-tire-rim-combination on the label, as long as the listing conforms in

content and format to the requirements for tire-rim-inflation information set forth in Standard No. 120 of this chapter (§ 571.120).

(3) At the option of the manufacturer, additional GVWR–GAWR ratings for operation of the vehicle at reduced speeds may be listed at the bottom of the certification label following any information that is required to be listed.

(i) [Reserved]

(j) A manufacturer may, at his option, provide information concerning which tables in the document that accompanies the vehicle pursuant to § 575.6(a) of this chapter apply to the vehicle. This information may not precede or interrupt the information required by paragraph (g) of this section.

(k) In the case of passenger cars admitted to the United States under 49 CFR part 592 to which the label required by this section has not been affixed by the original producer or assembler of the passenger car, a label meeting the requirements of this paragraph shall be affixed by the importer before the vehicle is imported into the United States, if the car is from a line listed in Appendix A of 49 CFR Part 541. This label shall be in addition to, and not in place of, the label required by paragraphs (a) through (j), inclusive, of this section.

(1) The label shall, unless riveted, be permanently affixed in such a manner that it cannot be removed without destroying or defacing it.

(2) The label shall be affixed to either the hinge pillar, door-latch post, or the door edge that meets the door-latch post, next to the driver's seating position, or, if none of these locations is practicable, to the left side of the instrument panel. If that location is also not practicable, the label shall be affixed to the inward-facing surface of the door next to the driver's seating position. The location of the label shall be such that it is easily readable without moving any part of the vehicle except an outer door.

(3) The lettering on the label shall be of a color that contrasts with the background of the label.

(4) The label shall contain the following statements, in the English language, lettered in block capitals and numerals not less than three thirty-seconds of an inch high, in the order shown:

(i) Model year (if applicable) or year of manufacture and line of the vehicle, as reported by the manufacturer that produced or assembled the vehicle. ''Model year'' is used as defined in § 565.3(h) of this chapter. ''Line'' is used as defined in § 541.4 of this chapter.

(ii) Name of the importer: The full corporate or individual name of the importer of the vehicle shall be spelled out, except that such abbreviations as ''Co.'' or ''Inc.'' and their foreign equivalents and the middle initial of individuals, may be used. The name of the importer shall be preceded by the words ''Imported By''.

(iii) The statement: ''This vehicle conforms to the applicable Federal motor vehicle theft prevention standard in effect on the date of manufacture.''

(l)(1) In the case of a passenger car imported into the United States under 49 CFR 591.5(f) which does not have an identification number that complies with 49 CFR 565.4 (b), (c), and (g) at the time of importation, the Registered Importer shall permanently affix a label to the vehicle in such a manner that, unless the label is riveted, it cannot be removed without being destroyed or defaced. The label shall be in addition to the label required by paragraph (a) of this section, and shall be affixed to the vehicle in a location specified in paragraph (c) of this section.

(2) The label shall contain the following statement, in the English language, lettered in block capitals and numerals not less than 4 mm high, with the location on the vehicle of the original manufacturer's identification number provided in the blank: ORIGINAL MANUFACTURER'S IDENTIFICATION NUMBER SUBSTITUTING FOR U.S. VIN IS LOCATED _____.

[36 FR 7056, Apr. 14, 1971, as amended at 36 FR 23572, Dec. 10, 1971; 41 FR 3479, Jan. 23, 1976; 41 FR 13923, Apr. 1, 1976; 42 FR 7144, Feb. 7, 1977; 42 FR 31162, June 20, 1977; 42 FR 37371, July 21, 1977; 42 FR 37817, July 25, 1977; 50 FR 43192, Oct. 24, 1985; 52 FR 28562, July 31, 1987; 54 FR 46256, Nov. 2, 1989; 56 FR 22356, May 15, 1991; 59 FR 64170, Dec. 13, 1994; 61 FR 29036, June 7, 1996; 64 FR 6817, Feb. 11, 1999]

§ 567.5 Requirements for manufacturers of vehicles manufactured in two or more stages.

(a) Except as provided in paragraph (e) of this section, each manufacturer of a chassis-cab shall affix a label to each chassis-cab manufactured on or after July 25, 1978, in the location and form specified in § 567.4, that contains the following statements to the extent that they are applicable.

(1) ''This chassis-cab conforms to Federal Motor Vehicle Safety Standard Nos. _____.'' The statement shall be completed by inserting the numbers of the safety standards (e.g., 101, 207) to which the chassis-cab conforms.

(2) ''This vehicle will conform to Standard Nos. _____ if it is completed in accordance with the instructions contained in the incomplete vehicle document furnished pursuant to 49 CFR part 568.'' The statement shall be completed by inserting the numbers of the safety standards conformity to which is substantially affected by both the design of the chassis-cab and the manner in which the vehicle is completed (i.e., the standards listed under category (ii) in § 568.4(a)(7) of this chapter).

(3) ''Comformity to the other safety standards applicable to this vehicle when completed is not substantially affected by the design of the chassis-cab.''

(4) Name of chassis-cab manufacturer preceded by the words ''CHASSIS-CAB MANUFACTURED BY'' or ''CHASSIS-CAB MFD BY''.

(5) Month and year of manufacture of chassis-cab. This may be spelled out, as in ''JUNE 1970'', or expressed in numerals, as in ''6/70''. No preface is required.

(b) Except as provided in paragraphs (e) and (f) of this section, each intermediate manufacturer of a vehicle manufactured in two or more stages shall affix a label, in the location and form specified in § 567.4, to each chassis-cab respecting which he is required by § 568.5 to furnish an addendum to the incomplete vehicle document described in § 568.4. However, this paragraph applies only to chassis-cabs that have been certified by a chassis-cab manufacturer in accordance with paragraph (a) of this section. The label shall contain the following statements as appropriate.

(1)(i) ''With respect to Standard Nos. _____, the instructions of prior manufacturers have been followed so that the chassis-cab now conforms to these standards.'' The statement shall be completed by inserting the numbers of all or less than all of the standards, and only those standards, respecting which the latest prior certification statement was in the form prescribed in paragraph (a)(2) or (b)(2) of this section.

(ii) ''This chassis-cab conforms to Federal Motor Vehicle Safety Standard Nos. _____.'' The statement shall be completed by inserting the numbers of the other standards to which the chassis-cab conforms, excluding those standards respecting which the latest prior certification statement was in the form prescribed in paragraphs (a)(1), (b)(1)(i), or this paragraph.

(2) ''This vehicle will conform to Standard Nos. _____ if it is completed in accordance with the instructions contained in the amended incomplete vehicle document furnished pursuant to 49 CFR part 568.'' The statement shall be completed by inserting the numbers of the standards conformity to which is substantially affected by both the design of the chassis-cab (as modified by the intermediate manufacturer) and the manner in which the vehicle is completed.

(3) ''Conformity to Standard Nos. _____ is no longer substantially affected by the design of this chassis-cab.'' The statement shall be completed by inserting the numbers of all or less than all of the standards, and only those standards, respecting which the latest prior certification statement was in the form prescribed in paragraphs (a) (1) and (2), (b)(1) (i) and (ii), or (b)(2) of this section.

(4) Name of intermediate manufacturer, preceded by the words ''INTERMEDIATE MANUFACTURE BY'' or ''INTERMEDIATE MFR BY''.

(5) Month and year in which the intermediate manufacturer performed his last manufacturing operation on the chassis-cab. This may be spelled out, as ''JUNE 1970'', or expressed as numerals, as ''6/70''. No preface is required.

(c) Except as provided in paragraphs (e) and (f) of this section, each final-stage manufacturer, as defined in § 568.3 of Title 49 of the CFR, of a vehicle manufactured in two or more stages shall affix to each vehicle a label, of the type and in the manner and form described in § 567.4 of this part, containing the following statements:

(1) Name of final-stage manufacturer, preceded by the words ''MANUFACTURED BY'' or ''MFD BY''.

(2) Month and year in which final-stage manufacture is completed. This may be spelled out, as in ''JUNE 1970'', or expressed in numerals, as in ''6/70''. No preface is required.

(3) Name of original manufacturer of the incomplete vehicle, preceded by the words ''INCOMPLETE VEHICLE MANUFACTURED BY'' or ''INC VEH MFD BY''. This item and item (4) may be omitted in cases where the incomplete vehicle was a chassis-cab.

(4) Month and year in which the original manufacturer of the incomplete vehicle performed his last manufacturing operation on the incomplete vehicle, in the same form as paragraph (c)(2) of this section.

(5) ''GROSS VEHICLE WEIGHT RATING'' or ''GVWR'', followed by the appropriate value in pounds, which shall not be less than the sum of the unloaded vehicle weight, rated cargo load, and 150 pounds times the vehicle's designated seating capacity. However, for school buses the minimum occupant weight allowance shall be 120 pounds.

(6) ''GROSS AXLE WEIGHT RATING'' or ''GAWR'', followed by the appropriate value in pounds for each axle, identified in order from front to rear (e.g., front, first intermediate, second intermediate, rear). The ratings for any consecutive axles having identical gross axle weight ratings when equipped with tires having the same tire size designation may be stated as a single value, with the label indicating to which axles the rating apply.

EXAMPLES OF COMBINED RATINGS

GAWR: (a) All axles—4080 with 7.00–15 LT(D) tires; (b) Front—12,000 with 10.00–20(G) tires. First intermediate to rear—15,000 with 12.00–20(H) tires.

(7) One of the following statements as appropriate. Statements (i), (ii), and (iii) are alternative certification statements. Statement (i) may be used by manufacturers meeting the requirements described in the instruction portion of that paragraph. Statements (ii) and (iii) may be used by any final-stage manufacturer.

(i) ''Conformity of the chassis-cab to Federal Motor Vehicle Safety Standards, which have been previously fully certified by the incomplete vehicle manufacturer or intermediate vehicle manufacturer, has not been affected by final-stage manufacture. The vehicle has been completed in accordance with the prior manufacturer's instructions, where applicable. This vehicle conforms to all other applicable Federal Motor Vehicle Safety Standards in effect in (month, year).''

The preceding statement shall be used only in cases in which the final-stage manufacturer has:

(A) Not affected conformity to standards compliance with which has been fully certified by a chassis-cab manufacturer pursuant to paragraph (a)(1) of this section or by an intermediate manufacturer pursuant to paragraphs (b)(1)(i) or (b)(1)(ii) of this section, and (B) has completed the vehicle in accordance with the prior manufacturer's instructions in regard to standards listed, as appropriate, in a chassis-cab manufacturer's conditional statement under paragraph (a)(2) of this section or in an intermediate manufacturer's conditional statement under paragraph (b)(2) of this section. The date shown in the third sentence of the statement shall be not earlier than the manufacturing date of the incomplete vehicle, and not later than the date of completion of final-stage manufacture.

(ii) ''Conformity of the chassis-cab to Federal Motor Vehicle Safety Standards Nos. ——— has not been affected by final stage manufacture. With respect to Standards Nos. _____, the vehicle has been completed in accordance with the prior manufacturer's instructions. This vehicle conforms to all other applicable Federal Motor Vehicle Safety Standards in effect in (month, year).''

The first sentence of the preceding statement shall be completed by inserting the numbers of all or less than all of the standards, and only those standards, respecting which the latest prior certification statement was made by a chassis-cab manufacturer pursuant to paragraph (a)(1) of this section or by an intermediate manufacturer pursuant to paragraphs (b)(1)(i) or (b)(1)(ii) of this section. The second sentence of the statement shall be completed by inserting the numbers of all or less than all of the standards and only those standards, respecting which the latest prior certification statement was a chassis-cab manufacturer's conditional statement under paragraph (a)(2) of this section or an intermediate manufacturer's conditional statement under paragraph (b)(2) of this section. The date shown in the third sentence of the statement shall be not earlier than the manufacturing date of the incomplete vehicle, and not later than the date of completion of final-stage manufacture.

(iii) ''This vehicle conforms to all applicable Federal Motor Vehicle Safety Standards in effect in (month, year).''

The date shown shall be not earlier than the manufacturing date of the incomplete vehicle and not later than the date of completion of final-stage manufacture.

(8) Vehicle identification number.

(9) The type classification of the vehicle as defined in §571.3 of Title 49 of the CFR (e.g., truck, MPV, bus, trailer).

(d) More than one set of figures for GVWR and GAWR, and one or more tire sizes, may be listed in satisfaction of the requirements of paragraphs (c)(5) and (6) of this section, as provided in §567.4(h).

(e) If an incomplete vehicle manufacturer assumes legal responsibility for all duties and liabilities imposed by the Act, with respect to the vehicle as finally manufactured, the incomplete vehicle manufacturer shall ensure that a label is affixed to the final vehicle in conformity with paragraph (c) of this section, except that the name of the incomplete vehicle manufacturer shall appear instead of the name of the final-stage manufacturer after the words ''MANUFACTURED BY'' or ''MFD BY'' required by paragraph (c)(1) of this section, the additional manufacturer's name required by paragraph (c)(3) of this section shall be omitted, and the date required by paragraph (c)(4) of this section shall be preceded by the words ''INCOMPLETE VEHICLE MANUFACTURED'' or ''INC VEH MFD.''

(f) If an intermediate manufacturer of a vehicle assumes legal responsibility for all duties and liabilities imposed on manufacturers by the Act, with respect to the vehicle as finally manufactured, the intermediate manufacturer shall ensure that a label is affixed to the final vehicle in conformity with paragraph (c) of this section, except that the name of the intermediate manufacturer shall appear instead of the name of the final-stage manufacturer after the words ''MANUFACTURED BY'' or ''MFD BY'' required by paragraph (c)(1) of this section.

[42 FR 37817, July 25, 1977; 42 FR 46927, Sept. 19, 1977, as amended at 43 FR 9605, Mar. 3, 1978; 43 FR 12014, Mar. 23, 1978; 43 FR 29124, July 6, 1978; 48 FR 51309, Nov. 8, 1983]

§567.6 Requirements for persons who do not alter certified vehicles or do so with readily attachable components.

A person who does not alter a motor vehicle or who alters such a vehicle only by the addition, substitution, or removal of readily attachable components such as mirrors or tires and rim assemblies, or minor finishing operations such as painting, in such a manner that the vehicle's stated weight ratings are still valid, need not affix a label to the vehicle, but shall allow a manufacturer's label that conforms to the requirements of this part to remain affixed to the vehicle. If such a person is a distributor of the motor vehicle, allowing the manufacturer's label to remain affixed to the vehicle shall satisfy the distributor's certification requirements under the Act.

[38 FR 15962, June 19, 1973]

§567.7 Requirements for persons who alter certified vehicles.

A person who alters a vehicle that has previously been certified in accordance with §567.4 or §567.5, other than

by the addition, substitution, or removal of readily attachable components such as mirrors or tire and rim assemblies, or minor finishing operations such as painting, or who alters the vehicle in such a manner that its stated weight ratings are no longer valid, before the first purchase of the vehicle in good faith for purposes other than resale, shall allow the original certification label to remain on the vehicle, and shall affix to the vehicle an additional label of the type and in the manner and form described in § 567.4, containing the following information:

(a) The statement: ''This vehicle was altered by (individual or corporate name) in (month and year in which alterations were completed) and as altered it conforms to all applicable Federal Motor Vehicle Safety Standards affected by the alteration and in effect in (month, year).'' The second date shall be no earlier than the manufacturing date of the original vehicle, and no later than the date alterations were completed.

(1) In the case of passenger cars manufactured on or after January 1, 2000, the expression ''safety, bumper, and theft prevention'' shall be substituted in the statement for the word ''safety''.

(2) In the case of multipurpose passenger vehicles (MPVs) and trucks with a GVWR of 6,000 pounds or less manufactured on or after January 1, 2000, the expression ''and theft prevention'' shall be included in the statement following the word ''safety''.

(b) If the gross vehicle weight rating or any of the gross axle weight ratings of the vehicle as altered are different from those shown on the original certification label, the modified values shall be provided in the form specified in § 567.4(g) (3) and (5).

(c) If the vehicle as altered has a different type classification from that shown on the original certification label, the type as modified shall be provided.

[38 FR 15963, June 19, 1973, as amended at 43 FR 21891, May 22, 1978; 45 FR 18929, Mar. 24, 1980; 64 FR 38595, July 19, 1999]

PART 568—VEHICLES MANUFACTURED IN TWO OR MORE STAGES

Sec.
568.1 Purpose and scope.
568.2 Application.
568.3 Definitions.
568.4 Requirements for incomplete vehicle manufacturers.
568.5 Requirements for intermediate manufacturers.
568.6 Requirements for final-stage manufacturers.
568.7 Requirements for manufacturers who assume legal responsibility for the vehicle.
568.8 Requirements for persons who alter certified vehicles.

AUTHORITY: Secs. 103, 112, 114, and 119, National Traffic and Motor Vehicle Safety Act (15 U.S.C. 1392, 1401, 1403, and 1407); delegation of authority at 49 CFR 1.50.

§ 568.1 Purpose and scope.

The purpose of this part is to prescribe the method by which manufacturers of vehicles manufactured in two or more stages shall ensure conformity of those vehicles with the Federal motor vehicle safety standards (''standards'') and other regulations issued under the National Traffic and Motor Vehicle Safety Act.

[36 FR 7057, Apr. 14, 1971]

§ 568.2 Application.

This part applies to incomplete vehicle manufacturers, intermediate manufacturers, and final-stage manufacturers of vehicles manufactured in two or more stages.

[36 FR 7057, Apr. 14, 1971]

§ 568.3 Definitions.

Completed vehicle means a vehicle that requires no further manufacturing operations to perform its intended function, other than the addition of readily attachable components, such as mirrors or tire and rim assemblies, or minor finishing operations such as painting.

Final-stage manufacturer means a person who performs such manufacturing operations on an incomplete vehicle that it becomes a completed vehicle.

Incomplete vehicle means an assemblage consisting, as a minimum, of frame and chassis structure, power train, steering system, suspension system, and braking system, to the extent that those systems are to be part of the completed vehicle, that requires further manufacturing operations, other than the addition of readily attachable components, such as mirrors or tire and rim assemblies, or minor finishing operations such as painting, to become a completed vehicle.

Intermediate manufacturer means a person, other than the incomplete vehicle manufacturer or the final-stage manufacturer, who performs manufacturing operations on an incomplete vehicle.

Incomplete vehicle manufacturer means a person who manufactures an incomplete vehicle by assembling components none of which, taken separately, constitute an incomplete vehicle.

[36 FR 7057, Apr. 14, 1971, as amended at 37 FR 10938, June 1, 1972]

§ 568.4 Requirements for incomplete vehicle manufacturers.

(a) The incomplete vehicle manufacturer shall furnish with the incomplete vehicle, at or before the time of delivery, a document that contains the following statements, in the order shown, and any other information required by this chapter to be included therein.

(1) Name and mailing address of the incomplete vehicle manufacturer.

(2) Month and year during which the incomplete vehicle manufacturer performed his last manufacturing operation on the incomplete vehicle.

(3) Identification of the incomplete vehicle(s) to which the document applies. The identification may be by serial number, groups of serial numbers, or otherwise, but it must be sufficient to ascertain positively that a document applies to a particular incomplete vehicle after the document has been removed from the vehicle.

(4) Gross vehicle weight rating of the completed vehicle for which the incomplete vehicle is intended.

(5) Gross axle weight rating for each axle of the completed vehicle, listed and identified in order from front to rear (e.g., front, first intermediate, second intermediate, rear). The ratings for any consective axles having identical gross axle weight ratings when equipped with tires having the same tire size designation may, at the option of the incomplete vehicle manufacturer, be stated as a single value, with the label indicating to which axles the ratings apply.

EXAMPLE OF COMBINED RATINGS

GAWR: (a) All axles—4080 with 7.00–15 LT(D) tires.

(b) Front—12,000 with 10.00–20(G) tires.

First intermediate to rear—15,000 with 12.00–20(H) tires.

(6) Listing of the vehicle types as defined in § 571.3 of this chapter (e.g., truck, MPV, bus, trailer) into which the incomplete vehicle may appropriately be manufactured.

(7) Listing by number of each standard, in effect at the time of manufacture of the incomplete vehicle, that applies to any of the vehicle types listed in this paragraph (a)(6) of this section, followed in each case by one of the following three types of statement, as applicable:

(i) A statement that the vehicle when completed will conform to the standard if no alterations are made in identified components of the incomplete vehicle.

Example: 107—This vehicle when completed will conform to Standard 107 (see § 571.107 of this chapter), Reflecting Surfaces, if no alterations are made in the windshield wiper components or in the reflecting surfaces in the interior of the cab.

(ii) A statement of specific conditions of final manufacture under which the manufacturer specifies that the completed vehicle will conform to the standard.

Example: 121—This vehicle when completed will conform to Standard 121, Airbrake Systems (see § 571.121 of this chapter), if it does not exceed any of the gross axle weight ratings, if the center of gravity at GVWR is not higher than nine feet above the ground, and if no alterations are made in any brake system component.

(iii) A statement that conformity with the standard is not substantially affected by the design of the incomplete vehicle, and that the incomplete vehicle manufacturer makes no representation as to conformity with the standard.

(b) The document shall be attached to the incomplete vehicle in such a manner that it will not be inadvertently detached, or alternatively, it may be sent directly to a final-stage manufacturer, intermediate manufacturer or purchaser for purposes other than resale to whom the incomplete vehicle is delivered.

[36 FR 7057, Apr. 14, 1971, as amended at 42 FR 31162, June 20, 1977; 42 FR 37371, July 21, 1977; 42 FR 37816, July 25, 1977]

§ 568.5 Requirements for intermediate manufacturers.

(a) Each intermediate manufacturer of an incomplete vehicle shall furnish the document required by § 568.4 in the manner specified in that section. If any of the changes in the vehicle made by the intermediate manufacturer affect the validity of the statements in the document as provided to him he shall furnish an addendum to the document that contains his name and mailing address and an indication of all changes that should be made in the document to reflect changes that he made in the vehicle.

(b) Each intermediate manufacturer shall, in accordance with § 567.5 of this chapter, affix a label to each chassis-cab respecting which he is required by paragraph (a) above to furnish an addendum to the document required by § 568.4.

(Authority: Secs. 103, 108, 112, 114, 119, Pub. L. 89–563, 80 Stat. 718 (15 U.S.C. 1392, 1397, 1401, 1403, 1407); delegation of authority at 49 CFR 1.50)

[43 FR 9605, Mar. 9, 1978]

§ 568.6 Requirements for final-stage manufacturers.

(a) Each final-stage manufacturer shall complete the vehicle in such a manner that it conforms to the standards in effect on the date of manufacture of the incomplete vehicle, the date of final completion, or a date between those two dates. This requirement shall, however, be superseded by any conflicting provisions of a standard that applies by its terms to vehicles manufactured in two or more stages.

(b) Each final-stage manufacturer shall affix a label to the completed vehicle in accordance with § 567.5 of this chapter.

[36 FR 7057, Apr. 14, 1971, as amended at 42 FR 37817, July 25, 1977]

§ 568.7 Requirements for manufacturers who assume legal responsibility for the vehicle.

(a) If an incomplete vehicle manufacturer assumes legal responsibility for all duties and liabilities imposed on manufacturers by the National Traffic and Motor Vehicle Safety Act (15 U.S.C. 1381 through 1425) (hereafter referred to as the Act), with respect to the vehicle as finally manufactured, the requirements of §§ 568.4, 568.5 and 568.6(b) do not apply to that vehicle. In such a case, the incomplete vehicle manufacturer shall ensure that a label is affixed to the final vehicle in conformity with § 567.5(e) of this chapter.

(b) If an intermediate manufacturer of a vehicle assumes legal responsibility for all duties and liabilities imposed on manufacturers by the Act, with respect to the vehicle as finally manufactured, §§ 568.5 and 568.6(b) do not apply to that vehicle. In such a case, the manufacturer assuming responsibility shall ensure that a label is affixed to the final vehicle in conformity with § 567.5(f) of this chapter. The assumption of responsibility by an intermediate manufacturer does not, however, change the requirements for incomplete vehicle manufacturers in § 568.4.

[36 FR 7057, Apr. 14, 1971, as amended at 42 FR 37817, July 25, 1977]

§ 568.8 Requirements for persons who alter certified vehicles.

A person who alters a vehicle that has been previously certified in accordance with § 567.4 or § 567.5, other than by the addition, substitution, or removal of readily attachable components such as mirrors or tire and rim assemblies, or minor finishing operations such as painting, or who alters a vehicle in such a manner that its stated weight ratings are no longer valid, before the first purchase of the vehicle in good faith for purposes other than resale, shall ascertain that the vehicle as altered conforms to the standards which are affected by the alteration and are in effect on the original date of

manufacture of the vehicle, the date of final completion, or a date between those two dates. That person shall certify the vehicle in accordance with § 567.7 of this chapter.

[45 FR 18929, Mar. 24, 1980]

PART 569—REGROOVED TIRES

Sec.
569.1 Purpose and scope.
569.3 Definitions.
569.5 Applicability.
569.7 Requirements.
569.9 Labeling of regroovable tires.

AUTHORITY: Secs. 119, 204, 80 Stat. 728, 729 (15 U.S.C. 1407, 1424); and Secretary's delegation of authority, 49 CFR 1.4(c).

§ 569.1 Purpose and scope.

This part sets forth the conditions under which regrooved and regroovable tires manufactured or regrooved after the effective date of the regulation may be sold, offered for sale, introduced for sale or delivered for introduction into interstate commerce.

[42 FR 21613, Apr. 28, 1977]

§ 569.3 Definitions.

(a) Statutory definitions. All terms used in this part that are defined in section 102 of the National Traffic and Motor Vehicle Safety Act of 1966 (15 U.S.C. 1391) are used as defined in the Act.

(b) Motor Vehicle Safety Standard definitions. Unless otherwise indicated, all terms used in this part that are defined in the Motor Vehicle Safety Standards, part 571, of this subchapter (hereinafter ''The Standards''), are used as defined therein without regard to the applicability of a standard in which a definition is contained.

(c) *Regroovable tire* means a tire, either original tread or retread, designed and constructed with sufficient tread material to permit renewal of the tread pattern or the generation of a new tread pattern in a manner which conforms to this part.

(d) *Regrooved tire* means a tire, either original tread or retread, on which the tread pattern has been renewed or a new tread has been produced by cutting into the tread of a worn tire to a depth equal to or deeper than the molded original groove depth.

[34 FR 1150, Jan. 24, 1969. Redesignated at 35 FR 5118, Mar. 26, 1970]

§ 569.5 Applicability.

(a) *General*. Except as provided in paragraph (b) of this section, this part applies to all motor vehicle regrooved or regroovable tires manufactured or regrooved after the effective date of the regulation.

(b) *Export*. This part does not apply to regrooved or regroovable tires intended solely for export and so labeled or tagged.

[34 FR 1150, Jan. 24, 1969. Redesignated at 35 FR 5118, Mar. 26, 1970]

§ 569.7 Requirements.

(a) *Regrooved tires*. (1) Except as permitted by paragraph (a)(2) of this section, no person shall sell, offer for sale, or introduce or deliver for introduction into interstate commerce regrooved tires produced by removing rubber from the surface of a worn tire tread to generate a new tread pattern. Any person who regrooves tires and leases them to owners or operators of motor vehicles and any person who regrooves his own tires for use on motor vehicles is considered to be a person delivering for introduction into interstate commerce within the meaning of this part.

(2) A regrooved tire may be sold, offered for sale, or introduced for sale or delivered for introduction into interstate commerce only if it conforms to each of the following requirements:

(i) The tire being regrooved shall be a regroovable tire;

(ii) After regrooving, cord material below the grooves shall have a protective covering of tread material at least 3/32-inch thick;

(iii) After regrooving, the new grooves generated into the tread material and any residual original molded tread groove which is at or below the new regrooved depth shall have a minimum of 90 linear inches of tread edges per linear foot of the circumference;

(iv) After regrooving, the new groove width generated into the tread material shall be a minimum of 3/16-inch and a maximum of 5/16-inch;

(v) After regrooving, all new grooves cut into the tread shall provide unobstructed fluid escape passages; and

(vi) After regrooving, the tire shall not contain any of the following defects, as determined by a visual examination of the tire either mounted on the rim, or dismounted, whichever is applicable:

(A) Cracking which extends to the fabric,

(B) Groove cracks or wear extending to the fabric, or

(C) Evidence of ply, tread, or sidewall separation;

(vii) If the tire is siped by cutting the tread surface without removing rubber, the tire cord material shall not be damaged as a result of the siping process, and no sipe shall be deeper than the original or retread groove depth.

(b) *Siped regroovable tires.* No person shall sell, offer for sale, or introduce for sale or deliver for introduction into interstate commerce a regroovable tire that has been siped by cutting the tread surface without removing rubber if the tire cord material is damaged as a result of the siping process, or if the tire is siped deeper than the original or retread groove depth.

[39 FR 15039, Apr. 30, 1974, as amended at 42 FR 21613, Apr. 28, 1977]

§ 569.9 Labeling of regroovable tires.

(a) *Regroovable tires.* After August 30, 1969, each tire designed and constructed for regrooving shall be labeled on both sidewalls with the word ''Regroovable'' molded on or into the tire in raised or recessed letters 0.025 to 0.040 inch. The word ''Regroovable'' shall be in letters 0.38 to 0.50 inch in height and not less than 4 inches and not more than 6 inches in length. The lettering shall be located in the sidewall of the tire between the maximum section width and the bead in an area which will not be obstructed by the rim flange.

[34 FR 1150, Jan. 24, 1969; 34 FR 1830, Feb. 7, 1969]

PART 570—VEHICLE IN USE INSPECTION STANDARDS

Subpart A—Vehicles With GVWR of 10,000 Pounds or Less

Sec.
570.1 Scope.
570.2 Purpose.
570.3 Applicability.
570.4 Definitions.
570.5 Service brake system.
570.6 Brake power unit.
570.7 Steering systems.
570.8 Suspension systems.
570.9 Tires.
570.10 Wheel assemblies.

Subpart B—Vehicles With GVWR of More Than 10,000 Pounds

570.51 Scope.
570.52 Purpose.
570.53 Applicability.
570.54 Definitions.
570.55 Hydraulic brake system.
570.56 Vacuum brake assist unit and vacuum brake system.
570.57 Air brake system and air-over-hydraulic brake subsystem.
570.58 Electric brake system.
570.59 Service brake system.
570.60 Steering system.
570.61 Suspension system.
570.62 Tires.
570.63 Wheel assemblies.

AUTHORITY: Secs. 103, 108, 119, Pub. L. 89–563, 80 Stat. 718 (15 U.S.C. 1392, 1397, 1407); delegation of authority at 49 CFR 1.50.

Subpart A—Vehicles With GVWR of 10,000 Pounds or Less

SOURCE: 38 FR 23950, Sept. 5, 1973, unless otherwise noted.

§ 570.1 Scope.

This part specifies standards and procedures for inspection of hydraulic service brake systems, steering and suspension systems, and tire and wheel assemblies of motor vehicles in use.

§ 570.2 Purpose.

The purpose of this part is to establish criteria for the inspection of motor vehicles by State inspection systems, in order to reduce death and injuries

attributable to failure or inadequate performance of motor vehicle systems.

§ 570.3 Applicability.

This part does not in itself impose requirements on any person. It is intended to be implemented by States through the highway safety program standards issued under the Highway Safety Act (23 U.S.C. 402) with respect to inspection of motor vehicles with gross vehicle weight rating of 10,000 pounds or less, except motorcycles or trailers.

§ 570.4 Definitions.

Unless otherwise indicated, all terms used in this part that are defined in 49 CFR part 571, Motor Vehicle Safety Standards, are used as defined in that part.

§ 570.5 Service brake system.

Unless otherwise noted, the force to be applied during inspection procedures to power-assisted and full-power brake systems is 25 lb, and to all other systems, 50 lb.

(a) *Failure indicator*. The brake system failure indicator lamp, if part of a vehicle's original equipment, shall be operable. (This lamp is required by Federal Motor Vehicle Safety Standard No. 105, 49 CFR 571.105, on every new passenger car manufactured on or after January 1, 1968, and on other types of motor vehicles manufactured on or after September 1, 1975.)

(1) *Inspection procedure*. Apply the parking brake and turn the ignition to start, or verify lamp operation by other means indicated by the vehicle manufacturer that the brake system failure indicator lamp is operable.

(b) *Brake system integrity*. The brake system shall demonstrate integrity as indicated by no perceptible decrease in pedal height under a 125 pound force applied to the brake pedal or by no illumination of the brake system failure indicator lamp. The brake system shall withstand the application of force to the pedal without failure of any line or other part.

(1) *Inspection procedures*. With the engine running on vehicles equipped with power brake systems, and the ignition turned to ''on'' in other vehicles, apply a force of 125 pounds to the brake pedal and hold for 10 seconds. Note any decrease in pedal height, and whether the lamp illuminates.

(c) *Brake pedal reserve*. When the brake pedal is fully depressed, the distance that the pedal has traveled from its free position shall be not greater than 80 percent of the total distance from its free position to the floorboard or other object that restricts pedal travel.

(1) *Inspection procedure*. Measure the distance (A) from the free pedal position to the floorboard or other object that restricts brake pedal travel. Depress the brake pedal, and with the force applied measure the distance (B) from the depressed pedal position to the floorboard or other object that restricts pedal travel.

Determine the percentage as

$$[(A-B)/A]\times 100.$$

The engine must be operating when power-assisted brakes are checked. The pedal reserve check is not required for vehicles equipped with full power (central hydraulic) brake systems, or to vehicles with brake systems designed to operate with greater than 80 percent pedal travel.

(d) *Service brake performance*. Compliance with one of the following performance criteria will satisfy the requirements of this section. Verify that tire inflation pressure is within the limits recommended by vehicle manufacturer before conducting either of the following tests.

(1) *Roller-type or drive-on platform tests*. The force applied by the brake on a front wheel or a rear wheel shall not differ by more than 20 percent from the force applied by the brake on the other front wheel or the other rear wheel respectively.

(i) *Inspection procedure*. The vehicle shall be tested on a drive-on platform, or a roller-type brake analyzer with the capability of measuring equalization. The test shall be conducted in accordance with the test equipment manufacturer's specifications. Note the left to right brake force variance.

(2) *Road test*. The service brake system shall stop the vehicle in a distance of 25 feet or less from a speed of 20 miles per hour without leaving a 12-foot-wide lane.

(i) *Inspection procedure.* The road test shall be conducted on a level (not to exceed plus or minus one percent grade) dry, smooth, hard-surfaced road that is free from loose material, oil, or grease. The service brakes shall be applied at a vehicle speed of 20 miles per hour and the vehicle shall be brought to a stop as specified. Measure the distance required to stop.

(e) *Brake hoses and assemblies.* Brake hoses shall not be mounted so as to contact the vehicle body or chassis. Hoses shall not be cracked, chafed, or flattened. Protective devices, such as ''rub rings,'' shall not be considered part of the hose or tubing.

(1) *Inspection procedure.* Examine visually, inspecting front brake hoses through all wheel positions from full left to full right for conditions indicated.

NOTE: To inspect for paragraphs (f), (g), and (h) of this section, remove at a minimum one front wheel and one rear wheel.

(f) *Disc and drum condition.* If the drum is embossed with a maximum safe diameter dimension or the rotor is embossed with a minimum safety thickness dimension, the drum or disc shall be within the appropriate specifications. These dimensions will be found on motor vehicles manufactured since January 1, 1971, and may be found on vehicles manufactured for several years prior to that time. If the drums and discs are not embossed, the drums and discs shall be within the manufacturer's specifications.

(1) *Inspection procedure.* Examine visually for condition indicated, measuring as necessary.

(g) *Friction materials.* On each brake the thickness of the lining or pad shall not be less than one thirty-second of an inch over the rivet heads, or the brake shoe on bonded linings or pads. Brake linings and pads shall not have cracks or breaks that extend to rivet holes except minor cracks that do not impair attachment. Drum brake linings shall be securely attached to brake shoes. Disc brake pads shall be securely attached to shoe plates.

(1) *Inspection procedure.* Examine visually for conditions indicated, and measure height of rubbing surface of lining over rivet heads. Measure bonded lining thickness over shoe surface at the thinnest point on the lining or pad.

(h) *Structural and mechanical parts.* Backing plates and caliper assemblies shall not be deformed or cracked. System parts shall not be broken, misaligned, missing, binding, or show evidence of severe wear. Automatic adjusters and other parts shall be assembled and installed correctly.

(1) *Inspection procedure.* Examine visually for conditions indicated.

[38 FR 23950, Sept. 5, 1973; 38 FR 25685, Sept. 14, 1973, as amended at 39 FR 12868, Apr. 9, 1974; 39 FR 17321, May 15, 1974]

§ 570.6 Brake power unit.

(a) Vacuum hoses shall not be collapsed, abraded, broken, improperly mounted, or audibly leaking. With residual vacuum exhausted and a constant 25 pound force on the brake pedal, the pedal shall fall slightly when the engine is started, demonstrating integrity of the power assist system. This test is not applicable to vehicles equipped with full power brake system as the service brake performance test shall be considered adequate test of system performance.

(1) *Inspection procedure.* With engine running, examine hoses visually and aurally for conditions indicated. Stop engine and apply service brakes several times to destroy vacuum in system. Depress brake pedal with 25 pounds of force and while maintaining that force, start the engine. If brake pedal does not fall slightly under force when the engine starts, there is a malfunction in the power assist system.

§ 570.7 Steering systems.

(a) *System play.* Lash or free play in the steering system shall not exceed values shown in Table 1.

(1) *Inspection procedure.* With the engine on and the wheels in the straight ahead position, turn the steering wheel in one direction until there is a perceptible movement of a front wheel. If a point on the steering wheel rim moves more than the value shown in Table 1 before perceptible return movement of the wheel under observation, there is excessive lash or free play in the steering system.

TABLE 1—STEERING SYSTEM FREE PLAY VALUES

Steering wheel diameter (inches)	Lash (inches)
16 or less	2
18	2¼
20	2½
22	2¾

(b) *Linkage play*. Free play in the steering linkage shall not exceed one-quarter of an inch.

(1) *Inspection procedure*. Elevate the front end of the vehicle to load the ball joints. Insure that wheel bearings are correctly adjusted. Grasp the front and rear of a tire and attempt to turn the tire and wheel assembly left and right. If the free movement at the front or rear tread of the tire exceeds one-quarter inch there is excessive steering linkage play.

(c) *Free turning*. Steering wheels shall turn freely through the limit of travel in both directions.

(1) *Inspection procedure*. Turn off steering wheel through the limit of travel in both directions. Feel for binding or jamming in the steering gear mechanism.

(d) *Alignment*. Toe-in and toe-out measurements shall not be greater than 1.5 times the value listed in the vehicle manufacturer's service specification for alignment setting.

(1) *Inspection procedure*. Verify that toe-in or toe-out is not greater than 1.5 times the values listed in the vehicle manufacturer's service specification for alignment settings as measured by a bar-type scuff gauge or other toe-in measuring device. Values to convert toe-in readings in inches to scuff gauge readings in ft/mi side-slip for different wheel sizes are provided in Table I. Tire diameters used in computing scuff gauge readings are based on the average maximum tire dimensions of grown tires in service for typical wheel and tire assemblies.

TABLE I—TOE-IN SETTINGS FROM VEHICLE MFR'S SERVICE SPECIFICATIONS

Wheel size (inches)	Nominal tire diameter (inches)	Readings in feet per mile sideslip								
		1/16 in	1/8 in	3/16 in	1/4 in	5/16 in	3/8 in	7/16 in	1/2 in	9/16 in
13	25.2	13.1	26.2	39.3	52.4	65.5	78.6	91.7	104.8	117.9
14	26.4	12.5	25.0	37.5	50.0	62.5	75.0	87.5	100.0	112.5
15	28.5	11.5	23.0	34.5	46.0	57.5	69.0	80.5	92.0	103.5
16	35.6	9.3	18.6	27.9	37.2	46.5	55.8	65.1	74.4	83.7

(e) *Power steering system*. The power steering system shall not have cracked or slipping belts, or insufficient fluid in the reservoir.

(1) *Inspection procedure*. Examine fluid reservoir and pump belts for conditions indicated.

[38 FR 23950, Sept. 5, 1973, as amended at 39 FR 12868, Apr. 9, 1974]

§ 570.8 Suspension systems.

(a) *Suspension condition*. Ball joint seals shall not be cut or cracked. Structural parts shall not be bent or damaged. Stabilizer bars shall be connected. Springs shall not be broken, or extended above the vehicle manufacturer's design height. Spacers, if installed, shall be installed on both front springs, both rear springs, or on all four springs. Shock absorber mountings, shackles, and U-bolts shall be securely attached. Rubber bushings shall not be cracked, extruded out from or missing from suspension joints. Radius rods shall not be missing or damaged.

(1) *Inspection procedure*. Examine front and rear end suspension parts for conditions indicated.

(b) *Shock absorber condition*. There shall be no oil on the shock absorber housing attributable to leakage by the seal, and the vehicle shall not continue free rocking motion for more than two cycles.

(1) *Inspection procedure*. Examine shock absorbers for oil leaking from within, then with vehicle on a level surface, push down on one end of vehicle and release. Note number of cycles of free rocking motion. Repeat procedure at other end of vehicle.

[38 FR 23950, Sept. 5, 1973, as amended at 44 FR 68470, Nov. 29, 1979]

§ 570.9 Tires.

(a) *Tread depth*. The tread on each tire shall be not less than two thirty-seconds of an inch deep.

(1) *Inspection procedure*. Passenger car tires have tread depth indicators that become exposed when tread depth is less than two thirty-seconds of an inch. Inspect for indicators in any two adjacent major grooves at three locations spaced approximately equally around the outside of the tire. For vehicles other than passenger cars, it may be necessary to measure tread depth with a tread gauge.

(b) *Type*. Vehicle shall be equipped with tires on the same axle that are matched in tire size designation, construction, and profile.

(1) *Inspection procedures*. Examine visually. A major mismatch in tire size designation, construction, and profile between tires on the same axle, or a major deviation from the size as recommended by the manufacturer (e.g., as indicated on the glove box placard on 1968 and later passenger cars) are causes for rejection.

(c) *General condition*. Tires shall be free from chunking, bumps, knots, or bulges evidencing cord, ply, or tread separation from the casing or other adjacent materials.

(1) *Inspection procedure*. Examine visually for conditions indicated.

(d) *Damage*. Tire cords or belting materials shall not be exposed, either to the naked eye or when cuts or abrasions on the tire are probed.

(1) *Inspection procedures*. Examine visually for conditions indicated, using a blunt instrument if necessary to probe cuts or abrasions.

[38 FR 23950, Sept. 5, 1973, as amended at 39 FR 12868, Apr. 9, 1974; 39 FR 19781, June 4, 1974]

§ 570.10 Wheel assemblies.

(a) *Wheel integrity*. A tire rim, wheel disc, or spider shall have no visible cracks, elongated bolt holes, or indication of repair by welding.

(1) *Inspection procedure*. Examine visually for conditions indicated.

(b) *Deformation*. The lateral and radial runout of each rim bead area shall not exceed one-eighth of an inch of total indicated runout.

(1) *Inspection procedure*. Using a runout indicator gauge, and a suitable stand, measure lateral and radial runout of rim bead through one full wheel revolution and note runout in excess of one-eighth of an inch.

(c) *Mounting*. All wheel nuts and bolts shall be in place and tight.

(1) *Inspection procedure*. Check wheel retention for conditions indicated.

[38 FR 23950, Sept. 5, 1973, as amended at 39 FR 12868, Apr. 9, 1974]

Subpart B—Vehicles With GVWR of More Than 10,000 Pounds

SOURCE: 39 FR 26027, July 16, 1974, unless otherwise noted.

§ 570.51 Scope.

This part specifies standards and procedures for the inspection of brake, steering and suspension systems, and tire and wheel assemblies, of motor vehicles in use with a gross vehicle weight rating of more than 10,000 pounds.

§ 570.52 Purpose.

The purpose of this part is to establish criteria for the inspection of motor vehicles through State inspection programs, in order to reduce deaths and injuries attributable to failure or inadequate performance of the motor vehicle systems covered by this part.

§ 570.53 Applicability.

This part does not in itself impose requirements on any person. It is intended to be implemented by States through the highway safety program standards issued under the Highway Safety Act (23 U.S.C. 402) with respect to inspection of motor vehicles with gross vehicle weight rating greater than 10,000 pounds, except mobile structure trailers.

[39 FR 28980, Aug. 13, 1974]

§ 570.54 Definitions.

Unless otherwise indicated, all terms used in this part that are defined in part 571 of this chapter, Motor Vehicle Safety Standards, are used as defined in that part.

Air-over-hydraulic brake subsystem means a subsystem of the air brake

that uses compressed air to transmit a force from the driver control to a hydraulic brake system to actuate the service brakes.

Electric brake system means a system that uses electric current to actuate the service brake.

Vacuum brake system means a system that uses a vacuum and atmospheric pressure for transmitting a force from the driver control to the service brake, but does not include a system that uses vacuum only to assist the driver in applying muscular force to hydraulic or mechanical components.

§ 570.55 Hydraulic brake system.

The following requirements apply to vehicles with hydraulic brake systems.

(a) *Brake system failure indicator*. The hydraulic brake system failure indicator lamp, if part of a vehicle's original equipment, shall be operable.

(1) *Inspection procedure*. Apply the parking brake and turn the ignition to start to verify that the brake system failure indicator lamp is operable, or verify by other means recommended by the vehicle manufacturer.

(b) *Brake system integrity*. The hydraulic brake system shall demonstrate integrity as indicated by no perceptible decrease in pedal height under a 125-pound force applied to the brake pedal and by no illumination of the brake system failure indicator lamp. The brake system shall withstand the application of force to the pedal without failure of any tube, hose or other part.

(1) *Inspection procedure*. With the engine running in vehicles equipped with power brake systems and the ignition turned to ''on'' in other vehicles, apply a force of 125 pounds to the brake pedal and hold for 10 seconds. Note any additional decrease in pedal height after the initial decrease, and whether the brake system failure indicator lamp illuminates.

(c) *Brake pedal reserve*. When the brake pedal is depressed with a force of 50 pounds, the distance that the pedal has traveled from its free position shall be not greater than 80 percent of the total distance from its free position to the floorboard or other object that restricts pedal travel. The brake pedal reserve test is not required for vehicles with brake systems designed by the original vehicle, manufacturer to operate with greater than 80 percent pedal travel.

(1) *Inspection procedure*. Measure the distance (i) from the free pedal position to the floor board or other object that restricts brake pedal travel. Depress the brake pedal, and with the force applied measure the distance (ii) from the depressed pedal position to the floor board or other object that restricts pedal travel. Determine the pedal travel percentage as

$$[(A - B) / A] \times 100$$

The engine must be operating when power-assisted brakes are checked.

(d) *Brake hoses, master cylinder, tubes and tube assemblies*. Hydraulic brake hoses shall not be mounted so as to contact the vehicle body or chassis. Hoses shall not be cracked, chafed, or flattened. Brake tubes shall not be flattened or restricted. Brake hoses and tubes shall be attached or supported to prevent damage by vibration or abrasion. Master cylinder shall not show signs of leakage. Hose or tube protective rings or devices shall not be considered part of the hose or tubing.

(1) *Inspection procedure*. Examine visually brake master cylinder, hoses and tubes, including front brake hoses, through all wheel positions from full left turn to full right turn for conditions indicated.

[39 FR 26027, July 16, 1974, as amended at 40 FR 5160, Feb. 4, 1975]

§ 570.56 Vacuum brake assist unit and vacuum brake system.

The following requirements apply to vehicles with vacuum brake assist units and vacuum brake systems.

(a) *Vacuum brake assist unit integrity*. The vacuum brake assist unit shall demonstrate integrity as indicated by a decrease in pedal height when the engine is started and a constant 50-pound force is maintained on the pedal.

(1) *Inspection procedure*. Stop the engine and apply service brake several times to destroy vacuum in system. Depress the brake pedal with 50 pounds of force and while maintaining that force, start the engine. If the brake pedal does not move slightly under force when the engine starts, there is a malfunction in the power assist unit.

(b) *Low-vacuum indicator*. If the vehicle has a low-vacuum indicator, the indicator activation level shall not be less than 8 inches of mercury.

(1) *Inspection procedure*. Run the engine to evacuate the system fully. Shut off the engine and slowly reduce the vacuum in the system by moderate brake applications until the vehicle vacuum gauge reads 8 inches of mercury. Observe the functioning of the low-vacuum indicator.

(c) *Vacuum brake system integrity*. (1) The vacuum brake system shall demonstrate integrity by meeting the following requirements:

(i) The vacuum brake system shall provide vacuum reserve to permit one service brake application with a brake pedal force of 50 pounds after the engine is turned off without actuating the low vacuum indicator.

(ii) Trailer vacuum brakes shall operate in conjunction with the truck or truck tractor brake pedal.

(2) *Inspection procedure*. (i) Check the trailer vacuum system by coupling trailer(s) to truck or truck tractor and opening trailer shutoff valves. Start the engine and after allowing approximately 1 minute to build up the vacuum, apply and release the brake pedal. In the case of trailer brakes equipped with brake chamber rods, observe the chamber rod movement. Run the engine to re-establish maximum vacuum, then shut off the engine and apply the brakes with a 50-pound force on the brake pedal. Note the brake application and check for low-vacuum indicator activation.

(ii) For a combination vehicle equipped with breakaway protection and no reservoir on the towing vehicle supply line, close the supply line shutoff valve and disconnect the supply line. Apply a 50-pound force to the brake pedal on the towing vehicle and release. Trailer brakes should remain in the applied position.

(d) *Vacuum system hoses, tubes and connections*. Vacuum hoses, tubes and connections shall be in place and properly supported. Vacuum hoses shall not be collapsed, cracked or abraded.

(1) *Inspection procedure*. With the engine running, examine hoses and tubes for the conditions indicated and note broken or missing clamps.

§ 570.57 Air brake system and air-over-hydraulic brake subsystem.

The following requirements apply to vehicles with air brake and air-over-hydraulic brake systems. Trailer(s) must be coupled to a truck or truck-tractor for the purpose of this inspection, except as noted.

(a) *Air brake system integrity*. The air brake system shall demonstrate integrity by meeting the following requirements:

(1) With the vehicle in a stationary position, compressed air reserve shall be sufficient to permit one full service brake application, after the engine is stopped and with the system fully charged, without lowering reservoir pressure more than 20 percent below the initial reading.

(2) The air brake system compressor shall increase the air pressure in the reservoir(s) from the level developed after the test prescribed in § 570.57(a)(1) to the initial pressure noted before the full brake application, with the engine running at the manufacturer's maximum recommended number of revolutions per minute with the compressor governor in the cut-off position, in not more than 30 seconds for vehicles manufactured prior to March 1, 1975. For vehicles, manufactured on or after March 1, 1975, the time allowed for air pressure buildup shall not exceed 45 seconds.

(3) The warning device (visual or audible) connected to the brake system air pressure source shall be activated when air pressure is lowered to an activating level that is not less than 50 psi. For vehicles manufactured to conform to Federal Motor Vehicle Safety Standard No. 121, the low-pressure indicator shall be activated when air pressure is lowered to an activating level that is not less than 60 psi.

(4) The governor cut-in pressure shall be not lower than 80 psi, and the cut-out pressure shall be not higher than 135 psi, unless other values are recommended by the vehicle manufacturer.

(5) Air brake pressure shall not drop more than 2 psi in 1 minute for single vehicles or more than 3 psi in 1 minute for combination vehicles, with the engine stopped and service brakes released. There may be an additional 1

psi drop per minute for each additional towed vehicle.

(6) With the reservoir(s) fully charged, air pressure shall not drop more than 3 psi in 1 minute for single vehicles or more than 4 psi in 1 minute for combination vehicles, with the engine stopped and service brakes fully applied. There may be an additional 1 psi drop per minute for each additional towed vehicle.

(7) The compressor drive belt shall not be badly worn or frayed and belt-tension shall be sufficient to prevent slippage.

Inspection procedure. With the air system charged, open the drain cocks in the service and supply reservoir on the truck or truck-tractor. Note the pressure at which the visual or audible warning device connected to the low-pressure indicator is activated. Close the drain cocks, and, with the trailer(s) uncoupled, check air pressure buildup at the manufacturer's recommended engine speed. Observe the time required to raise the air pressure from 85 to 100 psi. Continue running the engine until the governor cuts out and note the pressure. Reduce engine speed to idle, couple the trailer(s), if applicable, and make a series of brake applications. Note the pressure at which the governor cuts in. Increased engine speed to fast idle and charge the system to its governed pressure. Stop the engine and record the pressure drop in psi per minute with brakes released and with brakes fully applied.

(b) *Air brake system hoses, tubes and connections*. Air system tubes, hoses and connections shall not be restricted, cracked or improperly supported, and the air hose shall not be abraded.

(1) *Inspection procedure*. Stop the engine and examine air hoses, tubes and connections visually for conditions specified.

(c) *Air-over-hydraulic brake subsystem integrity*. The air-over-hydraulic brake subsystem shall demonstrate integrity by meeting the following requirements:

(1) The air brake system compressor shall increase the air pressure in the reservoir(s) from the level developed after the test prescribed in § 570.57(a)(1) to the initial pressure noted before the full brake application, with the engine running at the manufacturer's recommended number of revolutions per minute and the compressor governor in the cut-out position, in not more than 30 seconds for vehicles manufactured prior to March 1, 1975. For vehicles manufactured on or after March 1, 1975, the time for air pressure build up shall not exceed 45 seconds.

(2) The warning device (visual or audible) connected to the brake system air pressure source shall be activated when the air pressure is lowered to not less than 50 psi.

(3) The governor cut-in pressure shall be not lower than 80 psi, and the cut-out pressure shall not be higher than 135 psi, unless other values are recommended by the vehicle manufacturer.

(4) Air brake pressure shall not drop more than 2 psi in 1 minute for single vehicles or more than 3 psi in 1 minute for combination vehicles, with the engine stopped and service brakes released. Allow a 1-psi drop per minute for each additional towed vehicle.

(5) With the reservoir(s) fully charged, air pressure shall not drop more than 3 psi in 1 minute for single vehicles or more than 4 psi in 1 minute for combination vehicles, with the engine stopped and service brakes fully applied. Allow a 1-psi pressure drop in 1 minute for each additional towed vehicle.

(6) The compressor drive belt shall not be badly worn or frayed and belt tension shall be sufficient to prevent slippage.

Inspection procedure. With the air system charged, open the drain cocks in the service and supply reservoir on the truck or truck-tractor. Note the pressure at which the visual or audible warning device connected to the low pressure indicator is activated. Close the drain cocks and, with the trailers uncoupled, check air pressure buildup at the manufacturer's recommended engine speed. Observe the time required to raise the air pressure from 85 to 100 psi. Continue running the engine until the governor cuts out and note the pressure. Reduce engine speed to idle, couple trailers, and make a series of brake applications. Note the pressure at which the governor cuts in. Increase engine speed to fast idle and

charge the system to its governed pressure. Stop the engine and record the pressure drop in psi per minute with brakes released and with brakes fully applied.

(d) *Air-over-hydraulic brake subsystem hoses, master cylinder, tubes and connections.* System tubes, hoses and connections shall not be cracked or improperly supported, the air and hydraulic hoses shall not be abraded and the master cylinder shall not show signs of leakage.

(1) *Inspection procedure.* Stop the engine and examine air and hydraulic brake hoses, brake master cylinder, tubes and connections visually for conditions specified.

[39 FR 26027, July 16, 1974, as amended at 40 FR 5160, Feb. 4, 1975; 41 FR 13924, Apr. 1, 1976]

§ 570.58 Electric brake system.

(a) *Electric brake system integrity.* The average brake amperage value shall be not more than 20 percent above, and not less than 30 percent below, the brake manufacturer's maximum current rating. In progressing from zero to maximum, the ammeter indication shall show no fluctuation evidencing a short circuit or other interruption of current.

(1) *Inspection procedure.* Insert a low range (0 to 25 amperes for most 2- and 4-brake systems and 0 to 40 amperes for a 6-brake system) d.c. ammeter into the brake circuit between the controller and the brakes. With the controller in the ''off'' position, the ammeter should read zero. Gradually apply the controller to the ''full on'' position for a brief period (not to exceed 1 minute) and observe the maximum ammeter reading. Gradually return the controller to ''full off'' and observe return to zero amperes. Divide the maximum ammeter reading by the number of brakes and determine the brake amperage value.

(b) *Electric brake wiring condition.* Electric brake wiring shall not be frayed. Wiring clips or brackets shall not be broken or missing. Terminal connections shall be clean. Conductor wire gauge shall not be below the brake manufacturer's minimum recommendation.

(1) *Inspection procedure.* Examine visually for conditions specified.

§ 570.59 Service brake system.

(a) *Service brake performance.* Compliance with any one of the following performance criteria will satisfy the requirements of this section. Verify that tire inflation pressure is within the limits recommended by the vehicle manufacturer before conducting either of the following tests.

(1) *Roller-type or drive-on platform tests.* The force applied by the brake on a front wheel or a rear wheel shall not differ by more than 25 percent from the force applied by the brake on the other front wheel or the other rear wheel respectively.

(i) *Inspection procedure.* The vehicle shall be tested on a drive-on platform, or a roller-type brake analyzer with the capability of measuring equalization. The test shall be conducted in accordance with the test equipment manufacturer's specifications. Note the brake force variance.

(2) *Road test.* The service brake system shall stop single unit vehicles, except truck-tractors, in a distance of not more than 35 feet, or combination vehicles and truck-tractors in a distance of not more than 40 feet, from a speed of 20 mph, without leaving a 12-foot-wide lane.

(i) *Inspection procedure.* The road test shall be conducted on a level (not to exceed plus or minus 1 percent grade), dry, smooth, hard-surfaced road that is free from loose material, oil or grease. The service brakes shall be applied at a vehicle speed of 20 mph and the vehicle shall be brought to a stop as specified. Measure the distance required to stop.

NOTE: Inspect for paragraphs (b), (c) and (d) of this section on vehicles equipped with brake inspection ports or access openings, and when removal of wheel is not required.

(b) *Disc and drum condition.* If the drum is embossed with a maximum safe diameter dimension or the rotor is embossed with a minimum safe thickness dimension, the drum or disc shall be within the appropriate specifications. These dimensions will generally be found on motor vehicles manufactured since January 1, 1971, and may be found on vehicles manufactured for several years prior to that time. If the drums and discs are not embossed, they shall be within the manufacturer's specifications.

(1) *Inspection procedure*. Examine visually for the condition indicated, measuring as necessary.

(c) *Friction materials*. On each brake, the thickness of the lining or pad shall not be less than one thirty-second of an inch over the fastener, or one-sixteenth of an inch over the brake shoe on bonded linings or pads. Brake linings and pads shall not have cracks or breaks that extend to rivet holes except minor cracks that do not impair attachment. The wire in wire-backed lining shall not be visible on the friction surface. Drum brake linings shall be securely attached to brake shoes. Disc brake pads shall be securely attached to shoe plates.

(1) *Inspection procedure*. Examine visually for the conditions indicated, and measure the height of the rubbing surface of the lining over the fastener heads. Measure bonded lining thickness over the surface at the thinnest point on the lining or pad.

(d) *Structural and mechanical parts*. Backing plates, brake spiders and caliper assemblies shall not be deformed or cracked. System parts shall not be broken, misaligned, missing, binding, or show evidence of severe wear. Automatic adjusters and other parts shall be assembled and installed correctly.

(1) *Inspection procedure*. Examine visually for conditions indicated.

§ 570.60 Steering system.

(a) *System play*. Lash or free play in the steering system shall not exceed the values shown in Table 2.

(1) *Inspection procedure*. With the engine on and the steering axle wheels in the straight ahead position, turn the steering wheel in one direction until there is a perceptible movement of the wheel. If a point on the steering wheel rim moves more than the value shown in Table 1 before perceptible return movement of the wheel under observation, there is excessive lash or free play in the steering system.

TABLE 2. STEERING WHEEL FREE PLAY VALUES

Steering wheel diameter (inches)	Lash (inches)
16 or less	2
18	2¼
20	2½
22	2¾

(b) *Linkage play*. Free play in the steering linkage shall not exceed the values shown in Table 3.

(1) *Inspection procedure*. Elevate the front end of the vehicle to load the ball joints, if the vehicle is so equipped. Insure that wheel bearings are correctly adjusted. Grasp the front and rear of a tire and attempt to turn the tire and wheel assemble left and right. If the free movement at the front or rear tread of the tire exceeds the applicable value shown in Table 3, there is excessive steering linkage play.

TABLE 3. FRONT WHEEL STEERING LINKAGE FREE PLAY

Nominal bead diameter or rim size (inches)	Play (inches)
16 or less	¼
16.01 through 18.00	⅜
18.01 or more	½

(c) *Free turning*. Steering wheels shall turn freely through the limit of travel in both directions.

(1) *Inspection procedure*. With the engine running on a vehicle with power steering, or the steerable wheels elevated on a vehicle without power steering, turn the steering wheel through the limit of travel in both directions. Feel for binding or jamming in the steering gear mechanism.

(d) *Alignment*. Toe-in or toe-out condition shall not be greater than 1.5 times the values listed in the vehicle manufacturer's service specification for alignment setting.

(1) *Inspection procedure*. Drive the vehicle over a sideslip indicator or measure with a tread gauge, and verify that the toe-in or toe-out is not greater than 1.5 times the values listed in the vehicle manufacturer's service specification.

(e) *Power steering system*. The power steering system shall not have cracked, frayed or slipping belts, chafed or abrated hoses, show signs of leakage or have insufficient fluid in the reservoir.

(1) *Inspection procedure*. Examine fluid reservoir, hoses and pump belts for the conditions indicated.

NOTE: Inspection of the suspension system must not precede the service brake performance test.

§ 570.61 Suspension system.

(a) *Suspension condition.* Ball joint seals shall not be cut or cracked, other than superficial surface cracks. Ball joints and kingpins shall not be bent or damaged. Stabilizer bars shall be connected. Springs shall not be broken and coil springs shall not be extended by spacers. Shock absorber mountings, shackles, and U-bolts shall be securely attached. Rubber bushings shall not be cracked, extruded out from or missing from suspension joints. Radius rods shall not be missing or damaged.

(1) *Inspection procedure.* Examine front and rear end suspension parts for the conditions indicated.

(b) *Shock absorber condition.* There shall be no oil on the shock absorber housings attributable to leakage by the seal.

(1) *Inspection procedure.* Examine shock absorbers for oil leakage from within.

§ 570.62 Tires.

(a) *Tread depth.* The tread shall be not less than four thirty-seconds of an inch deep on each front tire of any vehicle other than a trailer and not less than two thirty-seconds of an inch on all other tires.

(1) *Inspection procedure.* For tires with treadwear indicators, check for indicators in any two adjacent major grooves at three locations spaced approximately 120° apart around the circumference of the tire. For tires without treadwear indicators, measure the tread depth with a suitable gauge or scale in two adjacent major grooves at 3 locations spaced approximately 120° apart around the circumference of the tire at the area of greatest wear.

(b) *Type.* Vehicles should be equipped with tires on the same axle that are matched in construction and tire size designation, and dual tires shall be matched for overall diameter within one-half inch.

(1) *Inspection procedure.* Examine visually. A mismatch in size and construction between tires on the same axle, or a major deviation from the size recommended by the vehicle or tire manufacturer, is a cause for rejection. On a dual-tire arrangement the diameter of one of the duals must be within one-half inch of the other as measured by a gauge block inserted between the tire and a caliper.

(c) *General condition.* Tires shall be free from chunking, bumps, knots, or bulges evidencing cord, ply or tread separation from the casing.

(1) *Inspection procedure.* Examine visually for the conditions indicated.

(d) *Damage.* Tire cords or belting materials shall not be exposed, either to the naked eye or when cuts on the tire are probed. Reinforcement repairs to the cord body are allowable on tires other than front-mounted tires.

(1) *Inspection procedure.* Examine visually for the conditions indicated, using a blunt instrument if necessary to probe cuts and abrasions.

(e) *Special purpose tires.* Tires marked ''Not For Highway Use'' or ''Farm Use Only'' or other such restrictions shall not be used on any motor vehicles operating on public highways.

(1) *Inspection procedure.* Examine visually for tires labeled with specific restrictions.

§ 570.63 Wheel assemblies.

(a) *Wheel integrity.* A tire rim, wheel disc or spider shall have no visible cracks, elongated bolt holes, or indications of in-service repair by welding.

(1) *Inspection procedure.* Examine visually for the conditions indicated.

(b) *Cast wheels.* Cast wheels shall not be cracked or show evidence of excessive wear in the clamp area.

(1) *Inspection procedure.* Examine visually for the conditions indicated.

(c) *Mounting.* All wheel nuts shall be in place and tight.

(1) *Inspection procedure.* Check wheel retention for the conditions indicated.

PART 571—FEDERAL MOTOR VEHICLE SAFETY STANDARDS

Subpart A—General

Sec.

571.1 Scope.
571.3 Definitions.
571.4 Explanation of usage.
571.5 Matter incorporated by reference.
571.7 Applicability.
571.8 Effective date.
571.9 Separability.

Subpart B—Federal Motor Vehicle Safety Standards

571.101 Standard No. 101; Controls and displays.
571.102 Standard No. 102; Transmission shift lever sequence, starter interlock, and transmission braking effect.
571.103 Standard No. 103; Windshield defrosting and defogging systems.
571.104 Standard No. 104; Windshield wiping and washing systems.
571.105 Standard No. 105; Hydraulic and electric brake systems.
571.106 Standard No. 106; Brake hoses.
571.107 [Reserved]
571.108 Standard No. 108; Lamps, reflective devices, and associated equipment.
571.109 Standard No. 109; New pneumatic tires.
571.110 Standard No. 110; Tire selection and rims.
571.111 Standard No. 111; Rearview mirrors.
571.112 [Reserved]
571.113 Standard No. 113; Hood latch system.
571.114 Standard No. 114; Theft protection.
571.115 [Reserved]
571.116 Standard No. 116; Motor vehicle brake fluids.
571.117 Standard No. 117; Retreaded pneumatic tires.
571.118 Standard No. 118; Power-operated window, partition, and roof panel systems.
571.119 Standard No. 119; New pneumatic tires for vehicles other than passenger cars.
571.120 Standard No. 120; Tire selection and rims for motor vehicles other than passenger cars.
571.121 Standard No. 121; Air brake systems.
571.122 Standard No. 122; Motorcycle brake systems.
571.123 Standard No. 123; Motorcycle controls and displays.
571.124 Standard No. 124; Accelerator control systems.
571.125 Standard No. 125; Warning devices.
571.126–571.128 [Reserved]
571.129 Standard No. 129; New non-pneumatic tires for passenger cars.
571.131 Standard No. 131; School bus pedestrian safety devices.
571.135 Standard No. 135; Passenger car brake systems.
571.138 Standard No. 138; Tire pressure monitoring systems.
571.201 Standard No. 201; Occupant protection in interior impact.
571.202 Standard No. 202; Head restraints.
571.203 Standard No. 203; Impact protection for the driver from the steering control system.
571.204 Standard No. 204; Steering control rearward displacement.
571.205 Standard No. 205; Glazing materials.
571.206 Standard No. 206; Door locks and door retention components.
571.207 Standard No. 207; Seating systems.
571.208 Standard No. 208; Occupant crash protection.
571.209 Standard No. 209; Seat belt assemblies.
571.210 Standard No. 210; Seat belt assembly anchorages.
571.211 [Reserved]
571.212 Standard No. 212; Windshield mounting.
571.213 Standard No. 213; Child restraint systems.
571.214 Standard No. 214; Side impact protection.
571.215 [Reserved]
571.216 Standard No. 216; Roof crush resistance.
571.217 Standard No. 217; Bus emergency exits and window retention and release.
571.218 Standard No. 218; Motorcycle helmets.
571.219 Standard No. 219; Windshield zone intrusion.
571.220 Standard No. 220; School bus rollover protection.
571.221 Standard No. 221; School bus body joint strength.
571.222 Standard No. 222; School bus passenger seating and crash protection.
571.223 Standard No. 223; Rear impact guards.
571.224 Standard No. 224; Rear impact protection.
571.225 Standard No. 225; Child restraint anchorage systems.
571.301 Standard No. 301; Fuel system integrity.
571.302 Standard No. 302; Flammability of interior materials.
571.303 Standard No. 303; Fuel system integrity of compressed natural gas vehicles.
571.304 Standard No. 304; Compressed natural gas fuel container integrity.
571.305 Standard No. 305; Electric-powered vehicles: electrolyte spillage and electrical shock protection.
571.401 Standard No. 401; Internal trunk release.
571.500 Standard No. 500; Low–speed vehicles.

AUTHORITY: 49 U.S.C. 322, 30111, 30115, 30166 and 30177; delegation of authority at 49 CFR 1.50.

Subpart A—General

§ 571.1 Scope.

This part contains the Federal Motor Vehicle Safety Standards for motor vehicles and motor vehicle equipment established under section 103 of the National Traffic and Motor Vehicle Safety Act of 1966 (80 Stat. 718).

[33 FR 19703, Dec. 25, 1968. Redesignated at 35 FR 5118, Mar. 26, 1970]

§ 571.3 Definitions.

(a) *Statutory definitions.* All terms defined in section 102 of the Act are used in their statutory meaning.

(b) *Other definitions.* As used in this chapter—

Act means the National Traffic and Motor Vehicle Safety Act of 1966 (80 Stat. 718).

Approved, unless used with reference to another person, means approved by the Secretary.

Boat trailer means a trailer designed with cradle-type mountings to transport a boat and configured to permit launching of the boat from the rear of the trailer.

Bus means a motor vehicle with motive power, except a trailer, designed for carrying more than 10 persons.

Curb weight means the weight of a motor vehicle with standard equipment; maximum capacity of engine fuel, oil, and coolant; and, if so equipped, air conditioning and additional weight optional engine.

Designated seating capacity means the number of designated seating positions provided.

Designated seating position means any plan view location capable of accommodating a person at least as large as a 5th percentile adult female, if the overall seat configuration and design and vehicle design is such that the position is likely to be used as a seating position while the vehicle is in motion, except for auxiliary seating accommodations such as temporary or folding jump seats. Any bench or split-bench seat in a passenger car, truck or multipurpose passenger vehicle with a GVWR less than 4,536 kilograms (10,000 pounds), having greater than 127 centimeters (50 inches) of hip room (measured in accordance with SAE Standard J1100(a)) shall have not less than three designated seating positions, unless the seat design or vehicle design is such that the center position cannot be used for seating. For the sole purpose of determining the classification of any vehicle sold or introduced into interstate commerce for purposes that include carrying students to and from school or related events, any location in such vehicle intended for securement of an occupied wheelchair during vehicle operation shall be regarded as four designated seating positions.

Driver means the occupant of a motor vehicle seated immediately behind the steering control system.

Emergency brake means a mechanism designed to stop a motor vehicle after a failure of the service brake system.

5th percentile adult female means a person possessing the dimensions and weight of the 5th percentile adult female specified for the total age group in Public Health Service Publication No. 1000, Series 11, No. 8, ''Weight, Height, and Selected Body Dimensions of Adults.''

Firefighting vehicle means a vehicle designed exclusively for the purpose of fighting fires.

Fixed collision barrier means a flat, vertical, unyielding surface with the following characteristics:

(1) The surface is sufficiently large that when struck by a tested vehicle, no portion of the vehicle projects or passes beyond the surface.

(2) The approach is a horizontal surface that is large enough for the vehicle to attain a stable attitude during its approach to the barrier, and that does not restrict vehicle motion during impact.

(3) When struck by a vehicle, the surface and its supporting structure absorb no significant portion of the vehicle's kinetic energy, so that a performance requirement described in terms of impact with a fixed collision barrier must be met no matter how small an amount of energy is absorbed by the barrier.

Forward control means a configuration in which more than half of the engine length is rearward of the foremost point of the windshield base and the

steering wheel hub is in the forward quarter of the vehicle length.

Full trailer means a trailer, except a pole trailer, that is equipped with two or more axles that support the entire weight of the trailer.

Gross axle weight rating or *GAWR* means the value specified by the vehicle manufacturer as the load-carrying capacity of a single axle system, as measured at the tire-ground interfaces.

Gross combination weight rating or *GCWR* means the value specified by the manufacturer as the loaded weight of a combination vehicle.

Gross vehicle weight rating or *GVWR* means the value specified by the manufacturer as the loaded weight of a single vehicle.

H point means the mechanically hinged hip point of a manikin which simulates the actual pivot center of the human torso and thigh, described in SAE Recommended Practice J826, ''Manikins for Use in Defining Vehicle Seating Accommodations,'' November 1962.

Head impact area means all nonglazed surfaces of the interior of a vehicle that are statically contactable by a 6.5-inch diameter spherical head form of a measuring device having a pivot point to ''top-of-head'' dimension infinitely adjustable from 29 to 33 inches in accordance with the following procedure, or its graphic equivalent:

(a) At each designated seating position, place the pivot point of the measuring device—

(1) For seats that are adjustable fore and aft, at—

(i) The seating reference point; and

(ii) A point 5 inches horizontally forward of the seating reference point and vertically above the seating reference point an amount equal to the rise which results from a 5–inch forward adjustment of the seat or 0.75 inch; and

(2) For seats that are not adjustable fore and aft, at the seating reference point.

(b) With the pivot point to ''top-of-head'' dimension at each value allowed by the device and the interior dimensions of the vehicle, determine all contact points above the lower windshield glass line and forward of the seating reference point.

(c) With the head form at each contact point, and with the device in a vertical position if no contact points exists for a particular adjusted length, pivot the measuring device forward and downward through all arcs in vertical planes to 90° each side of the vertical longitudinal plane through the seating reference point, until the head form contacts an interior surface or until it is tangent to a horizontal plane 1 inch above the seating reference point, whichever occurs first.

Interior compartment door means any door in the interior of the vehicle installed by the manufacturer as a cover for storage space normally used for personal effects.

Longitudinal or *longitudinally* means parallel to the longitudinal centerline of the vehicle.

Low-speed vehicle means a 4-wheeled motor vehicle, other than a truck, whose speed attainable in 1.6 km (1 mile) is more than 32 kilometers per hour (20 miles per hour) and not more than 40 kilometers per hour (25 miles per hour) on a paved level surface.

Motorcycle means a motor vehicle with motive power having a seat or saddle for the use of the rider and designed to travel on not more than three wheels in contact with the ground.

Motor-driven cycle means a motorcycle with a motor that produces 5-brake horsepower or less.

Multipurpose passenger vehicle means a motor vehicle with motive power, except a low-speed vehicle or trailer, designed to carry 10 persons or less which is constructed either on a truck chassis or with special features for occasional off-road operation.

Open-body type vehicle means a vehicle having no occupant compartment top or an occupant compartment top that can be installed or removed by the user at his convenience.

Outboard designated seating position means a designated seating position where a longitudinal vertical plane tangent to the outboard side of the seat cushion is less than 12 inches from the innermost point on the inside surface of the vehicle at a height between the design H-point and the shoulder reference point (as shown in fig. 1 of Federal Motor Vehicle Safety Standard No. 210) and longitudinally between the

front and rear edges of the seat cushion.

Overall vehicle width means the nominal design dimension of the widest part of the vehicle, exclusive of signal lamps, marker lamps, outside rearview mirrors, flexible fender extensions, and mud flaps, determined with doors and windows closed and the wheels in the straight-ahead position.

Parking brake means a mechanism designed to prevent the movement of a stationary motor vehicle.

Passenger car means a motor vehicle with motive power, except a low-speed vehicle, multipurpose passenger vehicle, motorcycle, or trailer, designed for carrying 10 persons or less.

Pelvic impact area means that area of the door or body side panel adjacent to any outboard designated seating position which is bounded by horizontal planes 7 inches above and 4 inches below the seating reference point and vertical transverse planes 8 inches forward and 2 inches rearward of the seating reference point.

Pole trailer means a motor vehicle without motive power designed to be drawn by another motor vehicle and attached to the towing vehicle by means of a reach or pole, or by being boomed or otherwise secured to the towing vehicle, for transporting long or irregularly shaped loads such as poles, pipes, or structural members capable generally of sustaining themselves as beams between the supporting connections.

School bus means a bus that is sold, or introduced in interstate commerce, for purposes that include carrying students to and from school or related events, but does not include a bus designed and sold for operation as a common carrier in urban transportation.

Seating reference point (SgRP) means the unique design H-point, as defined in SAE J1100 (June 1984), which:

(a) Establishes the rearmost normal design driving or riding position of each designated seating position, which includes consideration of all modes of adjustment, horizontal, vertical, and tilt, in a vehicle;

(b) Has X, Y, and Z coordinates, as defined in SAE J1100 (June 1984), established relative to the designed vehicle structure;

(c) Simulates the position of the pivot center of the human torso and thigh; and

(d) Is the reference point employed to position the two-dimensional drafting template with the 95th percentile leg described in SAE J826 (May 1987), or, if the drafting template with the 95th percentile leg cannot be positioned in the seating position, is located with the seat in its most rearward adjustment position.

Semitrailer means a trailer, except a pole trailer, so constructed that a substantial part of its weight rests upon or is carried by another motor vehicle.

Service brake means the primary mechanism designed to stop a motor vehicle.

Speed attainable in 1 mile means the speed attainable by accelerating at maximum rate from a standing start for 1 mile, on a level surface.

Speed attainable in 2 miles means the speed attainable by accelerating at maximum rate from a standing start for 2 miles, on a level surface.

Torso line means the line connecting the ''H'' point and the shoulder reference point as defined in SAE Recommended Practice J787g, ''Motor Vehicle Seat Belt Anchorage,'' September 1966.

Trailer means a motor vehicle with or without motive power, designed for carrying persons or property and for being drawn by another motor vehicle.

Trailer converter dolly means a trailer chassis equipped with one or more axles, a lower half of a fifth wheel and a drawbar.

Truck means a motor vehicle with motive power, except a trailer, designed primarily for the transportation of property or special purpose equipment.

Truck tractor means a truck designed primarily for drawing other motor vehicles and not so constructed as to carry a load other than a part of the weight of the vehicle and the load so drawn.

Unloaded vehicle weight means the weight of a vehicle with maximum capacity of all fluids necessary for operation of the vehicle, but without cargo, occupants, or accessories that are ordinarily removed from the vehicle when they are not in use.

95th percentile adult male means a person possessing the dimensions and weight of the 95th percentile adult male specified in Public Health Service Publication No. 1000, Series 11, No. 8, ''Weight, Height, and Selected Body Dimensions of Adults.''

Vehicle fuel tank capacity means the tank's unusable capacity (i.e., the volume of fuel left at the bottom of the tank when the vehicle's fuel pump can no longer draw fuel from the tank) plus its usable capacity (i.e., the volume of fuel that can be pumped into the tank through the filler pipe with the vehicle on a level surface and with the unusable capacity already in the tank). The term does not include the vapor volume of the tank (i.e., the space above the fuel tank filler neck) nor the volume of the fuel tank filler neck.

[33 FR 19703, Dec. 25, 1968. Redesignated at 35 FR 5118, Mar. 26, 1970]

EDITORIAL NOTE: For FEDERAL REGISTER citations affecting §571.3, see the List of CFR Sections Affected, which appears in the Finding Aids section of the printed volume and on GPO Access.

§571.4 Explanation of usage.

The word *any*, used in connection with a range of values or set of items in the requirements, conditions, and procedures of the standards or regulations in this chapter, means generally the totality of the items or values, any one of which may be selected by the Administration for testing, except where clearly specified otherwise.

Examples: ''The vehicle shall meet the requirements of S4.1 when tested at any point between 18 and 22 inches above the ground.'' This means that the vehicle must be capable of meeting the specified requirements at every point between 18 and 22 inches above the ground. The test in question for a given vehicle may call for a single test (a single impact, for example), but the vehicle must meet the requirement at whatever point the Administration selects, within the specified range.

''Each tire shall be capable of meeting the requirements of this standard when mounted on any rim specified by the manufacturer as suitable for use with that tire.'' This means that, where the manufacturer specifies more than one rim as suitable for use with a tire, the tire must meet the requirements with whatever rim the Administration selects from the specified group.

''Any one of the items listed below may, at the option of the manufacturer, be substituted for the hardware specified in S4.1.'' Here the wording clearly indicates that the selection of items is at the manufacturer's option.

[36 FR 2511, Feb. 5, 1971]

§571.5 Matter incorporated by reference.

(a) *Incorporation*. There are hereby incorporated, by reference, into this part, all materials referred to in any standard in subpart B of this part that are not set forth in full in the standard. These materials are thereby made part of this regulation. The Director of the Federal Register has approved the materials incorporated by reference. For materials subject to change, only the specific version approved by the Director of the Federal Register and specified in the standard are incorporated. A notice of any change in these materials will be published in the FEDERAL REGISTER. As a convenience to the reader, the materials incorporated by reference are listed in the Finding Aid Table found at the end of this volume of the Code of Federal Regulations.

(b) *Availability*. The materials incorporated by reference, other than acts of Congress and matter published elsewhere in the FEDERAL REGISTER, are available as follows:

(1) *Standards of the Society of Automotive Engineers* (*SAE*). They are published by the Society of Automotive Engineers, Inc. Information and copies may be obtained by writing to: Society of Automotive Engineers, Inc., 400 Commonwealth Drive, Warrendale, Pennsylvania 15096.

(2) *Standards of the American Society for Testing and Materials*. They are published by the American Society for Testing and Materials. Information on copies may be obtained by writing to the American Society for Testing and Materials, 1916 Race Street, Philadelphia, PA 19103.

(3) *Standards of the American National Standards Institute*. They are published by the American National Standards Institute. Information and copies may be obtained by writing to: American National Standards Institute, 1430 Broadway, New York, New York 10018.

(4) *Data from the National Health Survey, Public Health Publication No. 1000,*

Series 11, No. 8. This is published by the U.S. Department of Health, Education, and Welfare. Copies may be obtained for a price of 35 cents from the Superintendent of Documents, U.S. Government Printing Office, Washington, DC 20402.

(5) *Test methods of the American Association of Textile Chemists and Colorists*. They are published by the American Association of Textile Chemists and Colorists. Information and copies can be obtained by writing to: American Association of Textile Chemists and Colorists, Post Office Box 886, Durham, NC.

(6) *Test methods of the Illuminating Engineering Society of North America (IES)*. They are published by the Illuminating Engineering Society of North America. Copies can be obtained by writing to: Illuminating Engineering Society of North America, 345 East 47th St., New York, NY 10017.

(7) *Standards of Suppliers of Advanced Composite Materials Association (SACMA)*. They are published by Suppliers of Advanced Composite Materials Association. Information and copies may be obtained by writing to: Suppliers of Advanced Composite Materials Association, 1600 Wilson Blvd., Suite 1008, Arlington, VA 22209.

(8) *Standards of the American Society of Mechanical Engineers (ASME)*. They are published by The American Society of Mechanical Engineers. Information and copies may be obtained by writing to: The American Society of Mechanical Engineers, 345 East 47th Street, New York, NY 10017.

(9) *Regulations of the United Nations Economic Commission for Europe (ECE)*. They are published by the United Nations. Information and copies may be obtained by writing to: United Nations, Conference Services Division, Distribution and Sales Section, Office C.115–1, Palais des Nations, CH–1211, Geneva 10, Switzerland. Copies of Regulations also are available on the ECE internet web site: *www.unece.org/trans/main/wp29/wp29regs.html*.

(10) All of the above materials, as well as any other materials incorporated by reference, are available for inspection and copying at the Office of Vehicle Safety Standards, National Highway Traffic Safety Administration, 400 Seventh Street, SW., Washington, DC 20590. The materials are also available for inspection and copying at the Office of the Federal Register, 800 North Capitol Street, NW., suite 700, Washington, DC.

[33 FR 19704, Dec. 25, 1968. Redesignated at 35 FR 5118, Mar. 26, 1970, and amended at 35 FR 5120, Mar. 26, 1970; 36 FR 1148, Jan. 23, 1971; 41 FR 52880, Dec. 2, 1976; 41 FR 56812, Dec. 30, 1976; 47 FR 7254, Feb. 18, 1982; 48 FR 30141, June 30, 1983; 54 FR 20083, May 9, 1989; 59 FR 49021, Sept. 26, 1994; 60 FR 37843, Jul. 24, 1995; 64 FR 45898, Aug. 23, 1999]

§ 571.7 Applicability.

(a) *General*. Except as provided in paragraphs (c) and (d) of this section, each standard set forth in subpart B of this part applies according to its terms to all motor vehicles or items of motor vehicle equipment the manufacture of which is completed on or after the effective date of the standard.

(b) [Reserved]

(c) *Military vehicles*. No standard applies to a vehicle or item of equipment manufactured for, and sold directly to, the Armed Forces of the United States in conformity with contractual specifications.

(d) *Export*. No standard applies to a vehicle or item of equipment in the circumstances provided in section 108(b)(5) of the Act (15 U.S.C. 1397 (b)(5)).

(e) *Combining new and used components*. When a new cab is used in the assembly of a truck, the truck will be considered newly manufactured for purposes of paragraph (a) of this section, the application of the requirements of this chapter, and the Act, unless the engine, transmission, and drive axle(s) (as a minimum) of the assembled vehicle are not new, and at least two of these components were taken from the same vehicle.

(f) *Combining new and used components in trailer manufacture*. When new materials are used in the assembly of a trailer, the trailer will be considered newly manufactured for purposes of paragraph (a) of this section, the application of the requirements of this

chapter, and the Act, unless, at a minimum, the trailer running gear assembly (axle(s), wheels, braking and suspension) is not new, and was taken from an existing trailer—

(1) Whose identity is continued in the reassembled vehicle with respect to the Vehicle Identification Number; and

(2) That is owned or leased by the user of the reassembled vehicle.

[33 FR 19703, Dec. 25, 1968. Redesignated at 35 FR 5118, Mar. 26, 1970, and amended at 36 FR 7855, Apr. 27, 1971; 38 FR 12808, May 16, 1973; 40 FR 49341, Oct. 22, 1975; 41 FR 27074, July 1, 1976]

§571.8 Effective date.

Notwithstanding the effective date provisions of the motor vehicle safety standards in this part, the effective date of any standard or amendment of a standard issued after September 1, 1971, to which firefighting vehicles must conform shall be, with respect to such vehicles, either 2 years after the date on which such standard or amendment is published in the rules and regulations section of the FEDERAL REGISTER, or the effective date specified in the notice, whichever is later, except as such standard or amendment may otherwise specifically provide with respect to firefighting vehicles.

[36 FR 13927, July 28, 1971]

§571.9 Separability.

If any standard established in this part or its application to any person or circumstance is held invalid, the remainder of the part and the application of that standard to other persons or circumstances is not affected thereby.

[33 FR 19705, Dec. 25, 1968. Redesignated at 35 FR 5118, Mar. 26, 1970]

Subpart B—Federal Motor Vehicle Safety Standards

SOURCE: 36 FR 22902, Dec. 2, 1971, unless otherwise noted.

§571.101 Standard No. 101; Controls and displays.

S1. *Scope*. This standard specifies requirements for the location, identification, and illumination of motor vehicle controls and displays.

S2. *Purpose*. The purpose of this standard is to ensure the accessibility and visibility of motor vehicle controls and displays and to facilitate their selection under daylight and nighttime conditions, in order to reduce the safety hazards caused by the diversion of the driver's attention from the driving task, and by mistakes in selecting controls.

S3. *Application*. This standard applies to passenger cars, multipurpose passenger vehicles, trucks, and buses.

S4. *Definitions*.

Telltale means a display that indicates the actuation of a device, a correct or defective functioning or condition, or a failure to function.

Gauge means a display that is listed in S5.1 or in Table 2 and is not a telltale.

S5 Requirements. Each passenger car, multipurpose passenger vehicle, truck and bus manufactured with any control listed in S5.1 or in column 1 of Table 1, and each passenger car, multipurpose passenger vehicle and truck or bus less than 4,536 kg. GVWR with any display listed in S5.1 or in column 1 of Table 2, shall meet the requirements of this standard for the location, identification, and illumination of such control or display.

S5.1 *Location*. Under the conditions of S6, each of the following controls that is furnished shall be operable by the driver and each of the following displays that is furnished shall be visible to the driver. Under the conditions of S6, telltales are considered visible when activated.

HAND-OPERATED CONTROLS

(a) Steering wheel.
(b) Horn.
(c) Ignition.
(d) Headlamp.
(e) Taillamp.
(f) Turn signal.
(g) Illumination intensity.
(h) Windshield wiper.
(i) Windshield washer.
(j) Manual transmission shift lever, except transfer case.
(k) Windshield defrosting and defogging system.
(l) Rear window defrosting and defogging system.
(m) Manual choke.
(n) Driver's sun visor.
(o) Automatic vehicle speed system.

(p) Highbeam.
(q) Hazard warning signal.
(r) Clearance lamps.
(s) Hand throttle.
(t) Identification lamps.

FOOT-OPERATED CONTROLS

(a) Service brake.
(b) Accelerator.
(c) Clutch.
(d) Highbeam.
(e) Windshield washer.
(f) Windshield wiper.

DISPLAYS

(a) Speedometer.
(b) Turn signal.
(c) Gear position.
(d) Brake failure warning.
(e) Fuel.
(f) Engine coolant temperature.
(g) Oil.
(h) Highbeam.
(i) Electrical charge.

S5.2 *Identification.*

S5.2.1 Vehicle controls shall be identified as follows:

(a) Except as specified in S5.2.1(b), any hand-operated control listed in column 1 of Table 1 that has a symbol designated for it in column 3 of that table shall be identified by either the symbol designated in column 3 (or symbol substantially similar in form to that shown in column 3) or the word or abbreviation shown in column 2 of that table. Any such control for which no symbol is shown in Table 1 shall be identified by the word or abbreviation shown in column 2. Words or symbols in addition to the required symbol, word or abbreviation may be used at the manufacturer's discretion for the purpose of clarity. Any such control for which column 2 of Table 1 and/or column 3 of Table 1 specifies ''Mfr. Option'' shall be identified by the manufacturer's choice of a symbol, word or abbreviation, as indicated by that specification in column 2 and/or column 3. The identification shall be placed on or adjacent to the control. The identification shall, under the conditions of S6, be visible to the driver and, except as provided in S5.2.1.1, S5.2.1.2, and S5.2.1.3, appear to the driver perceptually upright.

(b) S5.2.1(a) does not apply to a turn signal control which is operated in a plane essentially parallel to the face plane of the steering wheel in its normal driving position and which is located on the left side of the steering column so that it is the control on that side of the column nearest to the steering wheel face plane.

S5.2.1.1 The identification of the following need not appear to the driver perceptually upright:

(a) A master lighting switch or headlamp and tail lamp control that adjusts control and display illumination by means of rotation, or any other rotating control that does not have an off position.

(b) A horn control.

S5.2.1.2 The identification of a rotating control other than one described by S5.2.1.1 shall appear to the driver perceptually upright when the control is in the off position.

S5.2.1.3 The identification of an automatic vehicle speed control located on the steering wheel, including the steering wheel hub and spokes, need not appear to the driver perceptually upright except when the vehicle, aligned to the manufacturer's specifications, has its wheels positioned for the vehicle to travel in a straight forward direction.

S5.2.2 Identification shall be provided for each function of any automatic vehicle speed system control and any heating and air conditioning system control, and for the extreme positions of any such control that regulates a function over a quantitative range. If this identification is not specified in Table 1 or 2, it shall be in word or symbol form unless color coding is used. If color coding is used to identify the extreme positions of a temperature control, the hot extreme shall be identified by the color red and the cold extreme by the color blue.

Example 1. A slide lever controls the temperature of the air in the vehicle heating system over a continuous range, from no heat to maximum heat. Since the control regulates a single function over a quantitative range, only the extreme positions require identification.

Example 2. A switch has three positions, for heat, defrost, and air conditioning. Since each position regulates a different function, each position must be identified.

S5.2.3 Except for the Low Tire Pressure Telltale (that does not identify

which tire has low pressure), any display located within the passenger compartment and listed in column 1 of Table 2 that has a symbol designated in column 4 of that table shall be identified by either the symbol designated in column 4 (or symbol substantially similar in form to that shown in column 4) or the word or abbreviation shown in column 3. The Low Tire Pressure Telltale (that does not identify which tire has low tire pressure) shall be identified by either the symbol designated in column 4, or the symbol and the words designated in column 4 and column 3, respectively. Additional words or symbols may be used at the manufacturer's discretion for the purpose of clarity. Any telltales used in conjunction with a gauge need not be identified. The identification required or permitted by this section shall be placed on or adjacent to the display that it identifies. The identification of any display shall, under the conditions of S6, be visible to the driver and appear to the driver perceptually upright.

S5.3 *Illumination.*

S5.3.1 Except for foot-operated controls or hand-operated controls mounted upon the floor, floor console, or steering column, or in the windshield header area, the identification required by S5.2.1 or S5.2.2 of any control listed in column 1 of Table 1 and accompanied by the word ''yes'' in the corresponding space in column 4 shall be capable of being illuminated whenever the headlights are activated. However, control identification for a heating and air-conditioning system need not be illuminated if the system does not direct air directly upon windshield. If a gauge is listed in column 1 of Table 2 and accompanied by the word ''yes'' in column 5, then the gauge and its identification required by S5.2.3 shall be illuminated whenever the ignition switch and/or the headlamps are activated. Controls, gauges, and their identifications need not be illuminated when the headlamps are being flashed. A telltale shall not emit light except when identifying the malfunction or vehicle condition for whose indication it is designed or during a bulb check upon vehicle starting.

S5.3.2. Each telltale shall be of the color shown in column 2 of Table 2. The identification of each telltale shall be in a color that contrasts with the background.

S5.3.3 (a) Means shall be provided for making controls, gauges, and the identification of those items visible to the driver under all driving conditions.

(b) The means for providing the required visibility—

(1) Shall be adjustable to provide at least two levels of brightness, one of which is barely discernible to a driver who has adapted to dark ambient roadway conditions.

(2) May be operable manually or automatically, and

(3) May have levels of brightness at which those items and identification are not visible.

(c) If the level of brightness is adjusted by automatic means to a point where those items or their identification are not visible to the driver, a means shall be provided to enable the driver to restore visibility.

S5.3.4 (a) Means shall be provided that are capable of making telltales and their identification visible to the driver under all driving conditions.

(b) The means for providing the required visibility may be adjustable manually or automatically, except that the telltales and identification for brakes, highbeams, turn signals, and safety belts may not be adjustable under any driving condition to a level that is invisible.

S5.3.5 Any source of illumination within the passenger compartment which is forward of a transverse vertical plane 110 mm rearward of the manikin ''H'' point with the driver's seat in its rearmost driving position, which is not used for the controls and displays regulated by this standard, which is not a telltale, and which is capable of being illuminated while the vehicle is in motion, shall have either (1) light intensity which is manually or automatically adjustable to provide at least two levels of brightness, (2) a single intensity that is barely discernible to a driver who has adapted to dark ambient roadway conditions, or (3) a means of being turned off. This requirement does not apply to buses that are normally operated with the passenger compartment illuminated.

S5.4 A common space may be used to display messages from any sources, subject to the following requirements:

(a) The telltales for the brake, high beam, and turn signal, and the safety belt telltale required by S4.5.3.3 of Standard No. 208 may not be shown on the common space.

(b) Except as provided in S5.4(e), the telltales listed in Table 2 shall be displayed at the initiation of any underlying condition.

(c) When the underlying condition exists for actuation of two or more messages, the messages shall be either—

(1) Repeated automatically in sequence, or

(2) Indicated by visible means and capable of being selected by the driver for viewing.

(d) Messages may be cancellable automatically or by the driver.

(e) The safety belt telltale must be displayed and visible during the time specified in S7.3 of Standard No. 208.

S6. *Conditions.* The driver is restrained by the crash protection equipment installed in accordance with the requirements of § 571.208 of this part (Standard No. 208), adjusted in accordance with the manufacturer's instructions.

Table 1
Identification and Illustration of Controls

Column 1	Column 2	Column 3	Column 4
Hand Operated Controls	*Identifying Words or Abbreviation*	*Identifying Symbol*	*Illumination*
Master Lighting Switch	Lights	5	—
Headlamps and Tail Lamps	(Manufacturer Option) [2]	(Manufacturer Option) [2]	—
Horn	Horn	4	—
Turn Signal	—	3 5	—
Hazard Warning Signal	Hazard	5	Yes
Windshield Wiping System	Wiper or Wipe		Yes
Windshield Washing System	Washer or Wash		Yes
Windshield Washing and Wiping Combined	Wash-Wipe or Washer-Wiper		Yes
Heating and or Air Conditioning Fan	Fan	or	Yes
Windshield Defrosting and Defogging System	Defrost, Defog or Def.		Yes
Rear Window Defrosting and Defogging System	Rear Defrost, Rear Defog, Rear Def., or R-Def.		Yes
Identification, Side Marker and or Clearance Lamps	Marker Lamps or MK Lps	2 5	Yes
Manual Choke	Choke	—	—
Engine Start	Engine Start[1]	—	—
Engine Stop	Engine Stop[1]	—	Yes
Hand Throttle	Throttle	—	—
Automatic Vehicle Speed	(Manufacturer Option)	—	Yes
Heating and Air Conditioning System	(Manufacturer Option)	(Manufacturer Option)	Yes

1 Use when engine control is separate from the key locking system.

2 Separate idenfication not required if controlled by master lighting switch.

3 The pair of arrows is a single symbol. When the controls for left and right turn operate independently, however, the two arrows may be considered separate symbols and be spaced accordingly.

4 Identification not required for vehicles with a GVWR greater than 4536 kg; or for narrow ring-type controls.

5 Framed areas may be filled.

Table 2
Identification and Illustration of Displays

Column 1	**Column 2**	**Column 3**	**Column 4**	**Column 5**
Display	*Telltale Color*	*Identifying Words or Abbreviation*	*Identifying Symbol*	*Illumination*
Turn Signal Telltale	Green	Also see FMVSS 108	1,5	_____
Hazard Warning Telltale		Also see FMVSS 108	2, 5	_____
Seat Belt Telltale	_____4	Fasten Belts or Fasten Seat Belts Also see FMVSS 208	or	_____
Fuel Level Telltale		Fuel	or	_____
Gauge	_____			Yes
Oil Pressure Telltale		Oil		_____
Gauge	_____			Yes
Coolant Temperature Telltale		Temp		_____
Gauge	_____			Yes
Electrical Charge Telltale		Volts, Charge or Amp		_____
Gauge	_____			Yes
Highbeam Telltale	Blue or Green 3	Also see FMVSS 108	5	_____

1. The pair of arrows is a single symbol. When the indicator for left and right turn operate independently, however, the two arrows will be considered separate symbols and may be spaced accordingly.
2. Not required when arrows of turn signal tell-tales that otherwise operate independently flash simultaneously as hazard warning tell-tale.
3. Red can be red-orange. Blue can be blue-green.
4. The color of the telltale required by S4.5.3.3 of Standard No. 208 is red; the color of the telltale required by S7.3 of Standard No. 208 is not specified.
5. Framed areas may be filled.

Table 2 (continued)

Column 1 *Display*	Column 2 *Telltale Color*	Column 3 *Identifying Words or Abbreviation*	Column 4 *Identifying Symbol*	Column 5 *Illumination*
Brake System 8	Red 3	Brake, Also see FMVSS 105 and 135	_____	_____
Malfunction in Anti-lock or	Yellow	Antilock, Anti-lock or ABS. Also see FMVSS 105 and 135	_____	_____
Variable Brake Proportioning System 8	Yellow	Brake Proportioning, Also see FMVSS 135	_____	_____
Parking Brake Applied 8	Red 3	Park or Parking Brake, Also see FMVSS 105 and 135	_____	_____
Malfunction in Anti-lock	Yellow	ABS, or Antilock; Trailer ABS, or Trailer Antilock, Also see FMVSS 121	_____	_____
Brake Air Pressure Position Telltale	_____	Brake Air, Also see FMVSS 121	_____	_____
Speedometer	_____	MPH, or MPH and km/h 7	_____	Yes
Odometer	_____	_____ 6	_____	_____
Automatic Gear Position	_____	Also see FMVSS 102	_____	Yes
Low Tire Pressure Telltale (that does not identify which tire has low pressure)	Yellow	Low Tire. Also see FMVSS 138		_____
Low Tire Pressure Telltale (that identifies which tire has low pressure)	Yellow	Low Tire. Also see FMVSS 138		_____

3. Red can be red-orange. Blue can be blue-green.
6. If the odometer indicates kilometers, then "KILOMETERS" or "km" shall appear, otherwise, no identification is required.
7. If the speedometer is graduated in miles per hour and in kilometers per hour, the identifying words or abbreviations shall be "MPH and km/h" in any combination of upper or lower case letters.
8. In the case where a single telltale indicates more than one brake system condition, the word for Brake System shall be used.

[43 FR 27542, June 26, 1978, as amended at 44 FR 55583, Sept. 27, 1979; 45 FR 71804, Oct. 30, 1980; 47 FR 2998, Jan. 21, 1982; 49 FR 30196, July 27, 1984; 50 FR 23431, June 4, 1985; 52 FR 3247, Feb. 3, 1987; 52 FR 7157, Mar. 9, 1987; 52 FR 19874, May 28, 1987; 52 FR 33417, Sept. 3, 1987; 56 FR 51848, Oct. 16, 1991; 60 FR 63977, Dec. 13, 1995; 62 FR 32542, 32543, June 16, 1997; 63 FR 28926, May 27, 1998; 63 FR 50997, Sept. 24, 1998; 65 FR 30916, May 15, 2000; 65 FR 30916, May 15, 2000; 67 FR 38743, June 5, 2002]

§ 571.102 Standard No. 102; Transmission shift lever sequence, starter interlock, and transmission braking effect.

S1. *Purpose and scope.* This standard specifies the requirements for the transmission shift lever sequence, a starter interlock, and for a braking effect of automatic transmissions, to reduce the likelihood of shifting errors, starter engagement with vehicle in drive position, and to provide supplemental braking at speeds below 40 kilometers per hour.

S2. *Application.* This standard applies to passenger cars, multipurpose passenger vehicles, trucks, and buses.

S3. *Requirements.*

S3.1 *Automatic transmissions.*

S3.1.1 *Location of transmission shift lever positions on passenger cars.* A neutral position shall be located between forward drive and reverse drive positions. If a steering-column-mounted transmission shift lever is used, movement from neutral position to forward drive position shall be clockwise. If the transmission shift lever sequence includes a park position, it shall be located at the end, adjacent to the reverse drive position.

S3.1.2 *Transmission braking effect.* In vehicles having more than one forward transmission gear ratio, one forward drive position shall provide a greater degree of engine braking than the highest speed transmission ratio at vehicle speeds below 40 kilometers per hour.

S3.1.3 *Starter interlock.* The engine starter shall be inoperative when the transmission shift lever is in a forward or reverse drive position.

S3.1.4 *Identification of shift lever positions.*

S3.1.4.1 Except as specified in S3.1.4.3, if the transmission shift lever sequence includes a park position, identification of shift lever positions, including the positions in relation to each other and the position selected, shall be displayed in view of the driver whenever any of the following conditions exist:

(a) The ignition is in a position where the transmission can be shifted.

(b) The transmission is not in park.

S3.1.4.2 Except as specified in S3.1.4.3, if the transmission shift lever sequence does not include a park position, identification of shift lever positions, including the positions in relation to each other and the position selected, shall be displayed in view of the driver whenever the ignition is in a position in which the engine is capable of operation.

S3.1.4.3 Such information need not be displayed when the ignition is in a position that is used only to start the vehicle.

S3.1.4.4 Effective September 23, 1991, all of the information required to be displayed by S3.1.4.1 or S3.1.4.2 shall be displayed in view of the driver in a single location. At the option of the manufacturer, redundant displays providing some or all of the information may be provided.

S3.2 *Manual transmissions.* Identification of the shift lever pattern of manual transmissions, except three forward speed manual transmissions having the standard ''H'' pattern, shall be displayed in view of the driver at all times when a driver is present in the driver's seating position.

[36 FR 22902, Dec. 2, 1971, as amended at 54 FR 29045, July 11, 1989; 56 FR 12471, Mar. 26, 1991; 60 FR 13642, March 14, 1995]

§ 571.103 Standard No. 103; Windshield defrosting and defogging systems.

S1. *Scope.* This standard specifies requirements for windshield defrosting and defogging systems.

S2. *Application.* This standard applies to passenger cars, multipurpose passenger vehicles, trucks, and buses.

S3. *Definitions. Road load* means the power output required to move a given motor vehicle at curb weight plus 180 kilograms on level, clean, dry, smooth portland cement concrete pavement (or other surface with equivalent coefficient of surface friction) at a specified speed through still air at 20 degrees Celsius, and standard barometric pressure (101.3 kilopascals) and includes driveline friction, rolling friction, and air resistance.

S4. *Requirements.* (a) Except as provided in paragraph (b) of this section, each passenger car shall meet the requirements specified in S4.1, S4.2, and S4.3, and each multipurpose passenger vehicle, truck, and bus shall meet the requirements specified in § 4.1.

(b) Each passenger car, multipurpose passenger vehicle, truck, and bus manufactured for sale in the noncontinental United States may, at the option of the manufacturer, have a windshield defogging system which operates either by applying heat to the windshield or by dehumidifying the air inside the passenger compartment of the vehicle, in lieu of meeting the requirements specified by paragraph (a) of this section.

S4.1 Each vehicle shall have a windshield defrosting and defogging system.

S4.2 Each passenger car windshield defrosting and defogging system shall meet the requirements of section 3 of SAE Recommended Practice J902, ''Passenger Car Windshield Defrosting Systems,'' August 1964, when tested in accordance with S4.3, except that ''the critical area'' specified in paragraph 3.1 of SAE Recommended Practice J902 shall be that established as Area C in accordance with Motor Vehicle Safety Standard No. 104, ''Windshield Wiping and Washing Systems,'' and ''the entire windshield'' specified in paragraph 3.3 of SAE Recommended Practice J902 shall be that established as Area A in accordance with §571.104.

S4.3 *Demonstration procedure.* The passenger car windshield defrosting and defogging system shall be tested in accordance with the portions of paragraphs 4.1 through 4.4.7 of SAE Recommended Practice J902, August 1964, or SAE Recommended Practice J902a, March 1967, applicable to that system, except that—

(a) During the first 5 minutes of the test:

(1) For a passenger car equipped with a heating system other than a heat exchanger type that uses the engine's coolant as a means to supply the heat to the heat exchanger, the warm-up procedure is that specified by the vehicle's manufacturer for cold weather starting, except that connection to a power or heat source external to the vehicle is not permitted.

(2) For all other passenger cars, the warm-up procedure may be that recommended by the vehicle's manufacturer for cold weather starting.

(b) During the last 35 minutes of the test period (or the entire test period if the 5-minute warm-up procedure specified in paragraph (a) of this section is not used),

(1) For a passenger car equipped with a heating system other than a heat exchanger type that uses the engine's coolant as a means to supply the heat to the heat exchanger, the procedure shall be that specified by the vehicle's manufacturer for cold weather starting, except that connection to a power or heat source external to the vehicle is not permitted.

(2) For all other passenger cars, either—

(i) The engine speed shall not exceed 1,500 r.p.m. in neutral gear; or

(ii) The engine speed and load shall not exceed the speed and load at 40 kilometers per hour in the manufacturer's recommended gear with road load;

(c) A room air change of 90 times per hour is not required;

(d) The windshield wipers may be used during the test if they are operated without manual assist;

(e) One or two windows may be open a total of 25 millimeters;

(f) The defroster blower may be turned on at any time; and

(g) The wind velocity is at any level from 0 to 3 kilometers per hour.

(h) The test chamber temperature and the wind velocity shall be measured, after the engine has been started, at the forwardmost point of the vehicle or a point 914 millimeters from the base of the windshield, whichever is farther forward, at a level halfway between the top and bottom of the windshield on the vehicle centerline.

[36 FR 22902, Dec. 2, 1971, as amended at 40 FR 12992, Mar. 24, 1975; 40 FR 32336, Aug. 1, 1975; 50 FR 48775, Nov. 27, 1985; 59 FR 11006, Mar. 9, 1994; 60 FR 13642, Mar. 14, 1995]

§571.104 Standard No. 104; Windshield wiping and washing systems.

S1. *Scope.* This standard specifies requirements for windshield wiping and washing systems.

S2. *Application.* This standard applies to passenger cars, multipurpose passenger vehicles, trucks, and buses.

S3. *Definitions.* The term *seating reference point* is substituted for the terms *manikin H point, manikin H point with seat in rearmost position* and *H point* wherever any of these terms appear in

any SAE Standard or SAE Recommended Practice referred to in this standard.

Daylight opening means the maximum unobstructed opening through the glazing surface, as defined in paragraph 2.3.12 of section E, Ground Vehicle Practice, SAE Aerospace-Automotive Drawing Standards, September 1963.

Glazing surface reference line means the line resulting from the intersection of the glazing surface and a horizontal plane 635 millimeters above the seating reference point, as shown in Figure 1 of SAE Recommended Practice J903a, ''Passenger Car Windshield Wiper Systems,'' May 1966.

Overall width means the maximum overall body width dimension ''W116'', as defined in section E, Ground Vehicle Practice, SAE Aerospace-Automotive Drawing Standards, September 1963.

Plan view reference line means—

(a) For vehicles with bench-type seats, a line parallel to the vehicle longitudinal centerline outboard of the steering wheel centerline 0.15 times the difference between one-half of the shoulder room dimension and the steering wheel centerline-to-car-centerline dimension as shown in Figure 2 of SAE Recommended Practice J903a, May 1966; or

(b) For vehicles with individual-type seats, either—

(i) A line parallel to the vehicle longitudinal centerline which passes through the center of the driver's designated seating position; or

(ii) A line parallel to the vehicle longitudinal centerline located so that the geometric center of the 95 percent eye range contour is positioned on the longitudinal centerline of the driver's designated seating position.

Shoulder room dimension means the front shoulder room dimension ''W3'' as defined in section E, Ground Vehicle Practice, SAE Aerospace-Automotive Drawing Standards, September 1963.

95 percent eye range contour means the 95th percentile tangential cutoff specified in SAE Recommended Practice J941, ''Passenger Car Driver's Eye Range,'' November 1965.

S4. *Requirements.*

S4.1 *Windshield wiping system.* Each vehicle shall have a power-driven windshield wiping system that meets the requirements of S4.1.1.

S4.1.1 *Frequency.*

S4.1.1.1 Each windshield wiping system shall have at least two frequencies or speeds.

S4.1.1.2 One frequency or speed shall be at least 45 cycles per minute regardless of engine load and engine speed.

S4.1.1.3 Regardless of engine speed and engine load, the highest and one lower frequency or speed shall differ by at least 15 cycles per minute. Such lower frequency or speed shall be at least 20 cycles per minute regardless of engine speed and engine load.

S4.1.1.4 Compliance with subparagraphs S4.1.1.2 and S4.1.1.3 may be demonstrated by testing under the conditions specified in sections 4.1.1 and 4.1.2 of SAE Recommended Practice J903a, May 1966.

S4.1.2 *Wiped area.* When tested wet in accordance with SAE Recommended Practice J903a, May 1966, each passenger car windshield wiping system shall wipe the percentage of Areas A, B, and C of the windshield (established in accordance with S4.1.2.1) that (1) is specified in column 2 of the applicable table following subparagraph S4.1.2.1 and (2) is within the area bounded by a perimeter line on the glazing surface 25 millimeters from the edge of the daylight opening.

S4.1.2.1 Areas A, B, and C shall be established as shown in Figures 1 and 2 of SAE Recommended Practice J903a, May 1966, using the angles specified in Columns 3 through 6 of Table I, II, III, or IV, as applicable.

TABLE I—PASSENGER CARS OF LESS THAN 1520 MILLIMETERS IN OVERALL WIDTH

Column 1—Area	Column 2—Minimum percent to be wiped	Angles in degrees			
		Column 3—Left	Column 4—Right	Column 5—Up	Column 6—Down
A	80	16	49	7	5
B	94	13	46	4	3
C	99	7	15	3	1

TABLE II—PASSENGER CARS OF 1520 OR MORE BUT LESS THAN 1630 MILLIMETERS IN OVERALL WIDTH

Column 1—Area	Column 2—Minimum percent to be wiped	Angles in degrees			
		Column 3—Left	Column 4—Right	Column 5—Up	Column 6—Down
A	80	17	51	8	5
B	94	13	49	4	3
C	99	7	15	3	1

TABLE III—PASSENGER CARS OF 1630 OR MORE BUT LESS THAN 1730 MILLIMETERS IN OVERALL WIDTH

Column 1—Area	Column 2—Minimum percent to be wiped	Angles in degrees			
		Column 3—Left	Column 4—Right	Column 5—Up	Column 6—Down
A	80	17	53	9	5
B	94	14	51	5	3
C	99	8	15	4	1

TABLE IV—PASSENGER CARS OF 1730 OR MORE MILLIMETERS IN OVERALL WIDTH

Column 1—Area	Column 2—Minimum percent to be wiped	Angles in degrees			
		Column 3—Left	Column 4—Right	Column 5—Up	Column 6—Down
A	80	18	56	10	5
B	94	14	53	5	3
C	99	10	15	5	1

S4.2 *Windshield washing system.*

S4.2.1 Each passenger car shall have a windshield washing system that meets the requirements of SAE Recommended Practice J942, ''Passenger Car Windshield Washer Systems,'' November 1965, except that the reference to ''the effective wipe pattern defined in SAE J903, paragraph 3.1.2'' in paragraph 3.1 of SAE Recommended Practice J942 shall be deleted and ''the areas established in accordance with subparagraph S4.1.2.1 of Motor Vehicle Safety Standard No. 104'' shall be inserted in lieu thereof.

S4.2.2 Each multipurpose passenger vehicle truck, and bus shall have a windshield washing system that meets the requirements of SAE Recommended Practice J942, November 1965, except that the reference to ''the effective wipe pattern defined in SAE J903, paragraph 3.1.2'' in paragraph 3.1 of SAE Recommended Practice J942 shall be deleted and ''the pattern designed by the manufacturer for the windshield wiping system on the exterior surface of the windshield glazing'' shall be inserted in lieu thereof.

[36 FR 22902, Dec. 2, 1971, as amended at 58 FR 13023, Mar. 9, 1993; 60 FR 13643, Mar. 14, 1995; 63 FR 51000, Sept. 24, 1998]

§571.105 Standard No. 105; Hydraulic and electric brake systems.

S1. *Scope.* This standard specifies requirements for hydraulic and electric service brake systems, and associated parking brake systems.

S2. *Purpose.* The purpose of this standard is to insure safe braking performance under normal and emergency conditions.

S3. Application. This standard applies to hydraulically-braked vehicles with a GVWR greater than 3,500 kilograms (7,716 pounds). This standard applies to hydraulically-braked passenger cars manufactured before September 1, 2000, and to hydraulically-braked multipurpose passenger vehicles, trucks and buses with a GVWR of 3,500 kilograms or less that are manufactured before September 1, 2002. At the option of the manufacturer, hydraulically-braked passenger cars manufactured before September 1, 2000, and hydraulically-braked multipurpose passenger vehicles, trucks and buses with a GVWR of 3,500 kilograms (7,716 pounds) or less manufactured before September 1, 2002, may meet the requirements of Federal Motor Vehicle Safety Standard No. 135, Light Vehicle Brake Systems instead of this standard.

S4. *Definitions.*

Antilock brake system or *ABS* means a portion of a service brake system that automatically controls the degree of rotational wheel slip during braking by:

(1) Sensing the rate of angular rotation of the wheels;

(2) Transmitting signals regarding the rate of wheel angular rotation to one or more controlling devices which interpret those signals and generate responsive controlling output signals; and

(3) Transmitting those controlling signals to one or more modulators which adjust brake actuating forces in response to those signals.

Backup system means a portion of a service brake system, such as a pump, that automatically supplies energy, in the event of a primary brake power source failure.

Brake power assist unit means a device installed in a hydraulic brake system that reduces the operator effort required to actuate the system, and that if inoperative does not prevent the operator from braking the vehicle by a continued application of muscular force on the service brake control.

Brake power unit means a device installed in a brake system that provides the energy required to actuate the brakes, either directly or indirectly through an auxiliary device, with the operator action consisting only of modulating the energy application level.

Directly Controlled Wheel means a wheel for which the degree of rotational wheel slip is sensed, either at that wheel or on the axle shaft for that wheel and corresponding signals are transmitted to one or more modulators that adjust the brake actuating forces at that wheel. Each modulator may also adjust the brake actuating forces at other wheels that are on the same axle or in the same axle set in response to the same signal or signals.

Electric vehicle or *EV* means a motor vehicle that is powered by an electric motor drawing current from rechargeable storage batteries, fuel cells, or other portable sources of electrical current, and which may include a nonelectrical source of power designed to charge batteries and components thereof.

Electrically-actuated service brakes means service brakes that utilize electrical energy to actuate the foundation brakes.

Hydraulic brake system means a system that uses hydraulic fluid as a medium for transmitting force from a service brake control to the service brake, and that may incorporate a brake power assist unit, or a brake power unit.

Indirectly Controlled Wheel means a wheel at which the degree of rotational wheel slip is not sensed, but at which the modulator of an antilock braking system adjusts its brake actuating forces in response to signals from one or more sensed wheels.

Initial brake temperature means the average temperature of the service brakes on the hottest axle of the vehicle 0.2 mi before any brake application.

Lightly loaded vehicle weight means:

(a) For vehicles with a GVWR of 10,000 lbs. or less, unloaded vehicle weight plus 400 lbs. (including driver and instrumentation);

(b) For vehicles with a GVWR greater than 10,000 lbs., unloaded vehicle weight plus 500 lbs. (including driver and instrumentation).

Motor home means a motor vehicle with motive power that is designed to provide temporary residential accommodations, as evidenced by the presence of at least four of the following facilities: cooking; refrigeration or ice box; self-contained toilet; heating and/or air conditioning; a potable water supply system including a faucet and a sink; and a separate 110–125 volt electric power supply and/or an LP gas supply.

Parking mechanism means a component or subsystem of the drive train that locks the drive train when the transmission control is placed in a parking or other gear position and the ignition key is removed.

Peak friction coefficient or *PFC* means the ratio of the maximum value of braking test wheel longitudinal force to the simultaneous vertical force occurring prior to wheel lockup, as the braking torque is progressively increased.

Pressure component means a brake system component that contains the brake system fluid and controls or senses the fluid pressure.

Regenerative braking system or *RBS* means an electrical energy system that is installed in an EV for recovering or dissipating kinetic energy, and which uses the propulsion motor(s) as a retarder for partial braking of the EV while returning electrical energy to the propulsion batteries or dissipating electrical energy.

Skid number means the frictional resistance of a pavement measured in accordance with American Society for Testing and Materials (ASTM) Method

E–274–70 (as revised July, 1974) at 40 mph, omitting water delivery as specified in paragraphs 7.1 and 7.2 of that method.

Snub means the braking deceleration of a vehicle from a higher reference speed to a lower reference speed that is greater than zero.

Spike stop means a stop resulting from the application of 200 lbs of force on the service brake control in 0.08 s.

Split service brake system means a brake system consisting of two or more subsystems actuated by a single control, designed so that a single failure in any subsystem (such as a leakage-type failure of a pressure component of a hydraulic subsystem except structural failure of a housing that is common to two or more subsystems, or an electrical failure in an electric subsystem) does not impair the operation of any other subsystem.

Stopping distance means the distance traveled by a vehicle from the point of application of force to the brake control to the point at which the vehicle reaches a full stop.

Tandem axle means a group of two or more axles placed in close arrangement one behind the other with the center lines of adjacent axles not more than 72 inches apart.

Variable proportioning brake system means a system that automatically adjusts the braking force at the axles to compensate for vehicle static axle loading and/or dynamic weight transfer between axles during deceleration.

Wheel lockup means 100 percent wheel slip.

S5. *Requirements.*

S5.1 *Service brake systems.* Each vehicle shall be equipped with a service brake system acting on all wheels. Wear of the service brake shall be compensated for by means of a system of automatic adjustment. Each passenger car and each multipurpose passenger vehicle, truck, and bus with a GVWR of 10,000 pounds or less shall be capable of meeting the requirements of S5.1.1 through S5.1.6 under the conditions prescribed in S6, when tested according to the procedures and in the sequence set forth in S7. Each school bus with a GVWR greater than 10,000 pounds shall be capable of meeting the requirements of S5.1.1 through S5.1.5 under the conditions prescribed in S6, when tested according to the procedures and in the sequence set forth in S7. Each multipurpose passenger vehicle, truck, and bus (other than a school bus) with a GVWR greater than 10,000 pounds shall be capable of meeting the requirements of S5.1.1, S5.1.2, and S5.1.3 under the conditions prescribed in S6, when tested according to the procedures and in the sequence set forth in S7. Except as noted in S5.1.1.2 and S5.1.1.4, if a vehicle is incapable of attaining a speed specified in S5.1.1, S5.1.2, S5.1.3, or S5.1.6, its service brakes shall be capable of stopping the vehicle from the multiple of 5 mph that is 4 to 8 mph less than the speed attainable in 2 miles, within distances that do not exceed the corresponding distances specified in Table II. If a vehicle is incapable of attaining a speed specified in S5.1.4 in the time or distance interval set forth, it shall be tested at the highest speed attainable in the time or distance interval specified.

S5.1.1 *Stopping distance.* (a) The service brakes shall be capable of stopping each vehicle with a GVWR of less than 8,000 pounds, and each school bus with a GVWR between 8,000 pounds and 10,000 pounds in four effectiveness tests within the distances and from the speeds specified in S5.1.1.1, S5.1.1.2, S5.1.1.3, and S5.1.1.4.

(b) The service brakes shall be capable of stopping each vehicle with a GVWR of between 8,000 pounds and 10,000 pounds, other than a school bus, in three effectiveness tests within the distances and from the speeds specified in S5.1.1.1, S5.1.1.2, and S5.1.1.4.

(c) The service brakes shall be capable of stopping each vehicle with a GVWR greater than 10,000 pounds in two effectiveness tests within the distances and from the speeds specified in S5.1.1.2 and S5.1.1.3. Each school bus with a GVWR greater than 10,000 pounds manufactured after January 12, 1996 and before March 1, 1999 and which is equipped with an antilock brake system may comply with paragraph S5.1.1.2 and S5.5.1 rather than the first effectiveness test, as specified in S5.1.1.1. Each school bus with a GVWR greater than 10,000 pounds manufactured on or after March 1, 1999 shall be capable of meeting the requirements of

S5.1.1 through S5.1.5, under the conditions prescribed in S6, when tested according to the procedures and in the sequence set forth in S7.

S5.1.1.1 In the first (preburnished) effectiveness test, the vehicle shall be capable of stopping from 30 mph and 60 mph within the corresponding distances specified in column I of table II.

S5.1.1.2 In the second effectiveness test, each vehicle with a GVWR of 10,000 pounds or less and each school bus with a GVWR greater than 10,000 pounds shall be capable of stopping from 30 mph and 60 mph, and each vehicle with a GVWR greater than 10,000 pounds (other than a school bus) shall be capable of stopping from 60 mph, within the corresponding distances specified in Column II of Table II. If the speed attainable in 2 miles is not less than 84 mph, a passenger car or other vehicle with a GVWR of 10,000 pounds or less shall also be capable of stopping from 80 mph within the corresponding distances specified in Column II of Table II.

S5.1.1.3 In the third effectiveness test the vehicle shall be capable of stopping at lightly loaded vehicle weight from 60 mph within the corresponding distance specified in column III of table II.

S5.1.1.4 In the fourth effectiveness test, a vehicle with a GVWR of 10,000 pounds or less shall be capable of stopping from 30 and 60 mph within the corresponding distances specified in column I of table II. If the speed attainable in 2 miles is not less than 84 mph, a passenger car, or other vehicle with a GVWR of 10,000 lbs., or less, shall also be capable of stopping from 80 mph within the corresponding distance specified in column I of table II.

If the speed attainable in 2 miles is not less than 99 mph, a passenger car shall, in addition, be capable of stopping from the applicable speed indicated below, within the corresponding distance specified in column I of table II.

Speed attainable in 2 miles (mph)	Required to stop from (mph)
Not less than 99 but less than 104	95
104 or more	100

For an EV, the speed attainable in 2 miles is determined with the propulsion batteries at a state of charge of not less than 95 percent at the beginning of the run.

S5.1.2 *Partial failure.*

S5.1.2.1 In vehicles manufactured with a split service brake system, in the event of a rupture or leakage type of failure in a single subsystem, other than a structural failure of a housing that is common to two or more subsystems, the remaining portion(s) of the service brake system shall continue to operate and shall be capable of stopping a vehicle from 60 mph within the corresponding distance specified in column IV of table II.

S5.1.2.2 In vehicles not manufactured with a split service brake system, in the event of any one rupture or leakage type of failure in any component of the service brake system the vehicle shall, by operation of the service brake control, be capable of stopping 10 times consecutively from 60 mph within the corresponding distance specified in column IV of table II.

S5.1.2.3 For a vehicle manufactured with a service brake system in which the brake signal is transmitted electrically between the brake pedal and some or all of the foundation brakes, regardless of the means of actuation of the foundation brakes, the vehicle shall be capable of stopping from 60 mph within the corresponding distance specified in Column IV of Table II with any single failure in any circuit that electrically transmits the brake signal, and with all other systems intact.

S5.1.2.4 For an EV manufactured with a service brake system that incorporates RBS, the vehicle shall be capable of stopping from 60 mph within the corresponding distance specified in Column IV of Table II with any single failure in the RBS, and with all other systems intact.

S5.1.3 *Inoperative brake power assist unit or brake power unit.* A vehicle equipped with one or more brake power assist units shall meet the requirements of either S5.1.3.1, S5.1.3.2, or S5.1.3.4 (chosen at the option of the manufacturer), and a vehicle equipped with one or more brake power units shall meet the requirements of either S5.1.3.1, S5.1.3.3, or S5.1.3.4 (chosen at the option of the manufacturer).

S5.1.3.1 The service brakes on a vehicle equipped with one or more brake power assist units or brake power units, with one such unit inoperative and depleted of all reserve capability, shall be capable of stopping a vehicle from 60 mph within the corresponding distance specified in column IV of table II.

S5.1.3.2 *Brake power assist units.* The service brakes on a vehicle equipped with one or more brake power assist units, with one such unit inoperative, shall be capable of stopping a vehicle from 60 mph:

(a) In six consecutive stops at an average deceleration for each stop that is not lower than that specified in column I of table III, when the inoperative unit is not initially depleted of all reserve capability; and

(b) In a final stop, at an average deceleration that is not lower than 7 FPSPS for passenger cars (equivalent stopping distance 554 feet) or 6 FPSPS for vehicles other than passenger cars (equivalent stopping distance 646 feet), as applicable, when the inoperative unit is depleted of all reserve capacity.

S5.1.3.3 *Brake power units.* The service brakes of a vehicle equipped with one or more brake power units with an accumulator-type reserve system, with any one failure in any one unit shall be capable of stopping the vehicle from 60 mph—

(a) In 10 consecutive stops at an average deceleration for each stop that is not lower than that specified in column II of table III, when the unit is not initially depleted of all reserve capability; and

(b) In a final stop, at an average deceleration that is not lower than 7 FPSPS for passenger cars (equivalent stopping distance 554 feet) or 6 FPSPS for vehicles other than passenger cars (equivalent stopping distance 646 feet), as applicable, when the inoperative unit is depleted of all reserve capacity.

S5.1.3.4 *Brake power assist and brake power units.* The service brakes of a vehicle equipped with one or more brake power assist units or brake power units with a backup system, with one brake power assist unit or brake power unit inoperative and depleted of all reserve capability and with only the backup system operating in the failed subsystem, shall be capable of stopping the vehicle from 60 mph in 15 consecutive stops at an average deceleration for each stop that is not lower than 12 fpsps (equivalent stopping distance 323 feet).

S5.1.3.5 *Electric brakes.* Each vehicle with electrically-actuated service brakes (brake power unit) shall comply with the requirements of S5.1.3.1 with any single electrical failure in the electrically-actuated service brakes and all other systems intact.

S5.1.4 *Fade and recovery.* The service brakes shall be capable of stopping each vehicle in two fade and recovery tests as specified below.

S5.1.4.1 The control force used for the baseline check stops or snubs shall be not less than 10 pounds, nor more than 60 pounds, except that the control force for a vehicle with a GVWR of 10,000 pounds or more may be between 10 pounds and 90 pounds.

S5.1.4.2 (a) Each vehicle with GVWR of 10,000 lbs or less shall be capable of making 5 fade stops (10 fade stops on the second test) from 60 mph at a deceleration not lower than 15 fpsps for each stop, followed by 5 fade stops at the maximum deceleration attainable from 5 to 15 fpsps.

(b) Each vehicle with a GVWR greater than 10,000 pounds shall be capable of making 10 fade snubs (20 fade snubs on the second test) from 40 mph to 20 mph at 10 fpsps for each snub.

S5.1.4.3 (a) Each vehicle with a GVWR of 10,000 pounds or less shall be capable of making five recovery stops from 30 mph at 10 fpsps for each stop, with a control force application that falls within the following maximum and minimum limits:

(1) A maximum for the first four recovery stops of 150 pounds, and for the fifth stop, of 20 pounds more than the average control force for the baseline check; and

(2) A minimum of—

(A) The average control force for the baseline check minus 10 pounds, or

(B) The average control force for the baseline check times 0.60,

whichever is lower (but in no case lower than 5 pounds).

(b) Each vehicle with a GVWR of more than 10,000 pounds shall be capable of making five recovery snubs from

40 mph to 20 mph at 10 fpsps for each snub, with a control force application that falls within the following maximum and minimum limits:

(1) A maximum for the first four recovery snubs of 150 pounds, and for the fifth snub, of 20 pounds more than the average control force for the baseline check (but in no case more than 100 pounds); and

(2) A minimum of—

(A) The average control force for the baseline check minus 10 pounds, or

(B) The average control force for the baseline check times 0.60,

whichever is lower (but in no case lower than 5 pounds).

S5.1.5 *Water recovery*. The service brakes shall be capable of stopping each vehicle in a water recovery test, as specified below.

S5.1.5.1 The control force used for the baseline check stops or snubs shall be not less than 10 pounds, nor more than 60 pounds, except that the control force for a vehicle with a GVWR of 10,000 pounds or more may be between 10 and 90 pounds.

S5.1.5.2(a) After being driven for 2 minutes at a speed of 5 mph in any combination of forward and reverse directions through a trough having a water dept of 6 inches, each vehicle with a GVWR of 10,000 pounds or less shall be capable of making five recovery stops from 30 mph at ten fpsps for each stop with a control force application that falls within the following maximum and minimum limits:

(1) A maximum for the first four recovery stops of 150 pounds, and for the fifth stop, of 45 pounds more than the average control force for the baseline check (but in no case more than 90 pounds, except that the maximum control force for the fifth stop in the case of a vehicle manufactured before September 1, 1976, shall be not more than plus 60 pounds of the average control force for the baseline check (but in no case more than 110 pounds).

(2) A minimum of—

(A) The average control force for the baseline check minus 10 pounds, or

(B) The average control force for the baseline check times 0.60,

whichever is lower (but in no case lower than 5 pounds).

(b) After being driven for 2 minutes at a speed of 5 mph in any combination of forward and reverse directions through a trough having a water depth of 6 inches, each vehicle with a GVWR of more than 10,000 pounds shall be capable of making five recovery stops from 30 mph at 10 fpsps for each stop with a control force application that falls within the following maximum and minimum limits:

(1) A maximum for the first four recovery stops of 150 pounds, and for the fifth stop, of 60 pounds more than the average control force for the baseline check (but in no case more than 110 pounds); and

(2) A minimum of—

(A) The average control force for the baseline check minus 10 pounds, or

(B) The average control force for the baseline check times 0.60,

whichever is lower (but in no case lower than 5 pounds).

S5.1.6 *Spike stops*. Each vehicle with a GVWR of 10,000 lbs. or less shall be capable of making 10 spike stops from 30 mph, followed by 6 effectiveness (check) stops from 60 mph, at least one of which shall be within a corresponding stopping distance specified in column I of table II.

S5.2 *Parking brake system*. Each vehicle with a GVWR of 10,000 lbs. or less and each school bus with a GVWR greater than 10,000 lbs., shall be manufactured with a parking brake system of a friction type with a solely mechanical means to retain engagement, which shall under the conditions of S6., when tested according to the procedures specified in S7., meet the requirements specified in S5.2.1, S5.2.2, or S5.2.3 as appropriate, with the system engaged—

(a) In the case of a vehicle with a GVWR of 10,000 lbs. or less, with a force applied to the control not to exceed 125 pounds for a foot-operated system and 90 pounds for a hand-operated system; and

(b) In the case of a school bus with a GVWR greater than 10,000 lbs. with a force applied to the control not to exceed 150 pounds for a foot-operated system and 125 pounds for a hand-operated system.

S5.2.1. Except as provided in §5.2.2, the parking brake system on a passenger car and on a school bus with a GVWR of 10,000 pounds or less shall be capable of holding the vehicle stationary (to the limit of traction on the braked wheels) for 5 minutes in both a forward and reverse direction on a 30 percent grade.

S5.2.2 A vehicle of a type described in S5.2.1 at the option of the manufacturer may meet the requirements of S5.2.2.1, S5.2.2.2, and S5.2.2.3 instead of the requirements of S5.2.1 if:

(a) The vehicle has a transmission or transmission control which incorporates a parking mechanism, and

(b) The parking mechanism must be engaged before the ignition key can be removed.

S5.2.2.1 The vehicle's parking brake and parking mechanism, when both are engaged, shall be capable of holding the vehicle stationary (to the limit of traction of the braked wheels) for 5 minutes, in both forward and reverse directions, on a 30 percent grade.

S5.2.2.2 The vehicle's parking brake, with the parking mechanism not engaged, shall be capable of holding the vehicle stationary for 5 minutes, in both forward and reverse directions, on a 20 percent grade.

S5.2.2.3 With the parking mechanism engaged and the parking brake not engaged, the parking mechanism shall not disengage or fracture in a manner permitting vehicle movement, when the vehicle is impacted at each end, on a level surface, by a barrier moving at 2½ mph.

S5.2.3. The parking brake system on a multipurpose passenger vehicle, truck and bus (other than a school bus) with a GVWR of 10,000 pounds or less and a school bus with a GVWR greater than 10,000 pounds shall be capable of holding the vehicle stationary for 5 minutes, in both forward and reverse directions, on a 20 percent grade.

S5.3 *Brake system indicator lamp.* Each vehicle shall have a brake system indicator lamp or lamps, mounted in front of and in clear view of the driver, which meet the requirements of S5.3.1 through S5.3.5. A vehicle with a GVWR of 10,000 pounds or less may have a single common indicator lamp. A vehicle with a GVWR of greater than 10,000 pounds may have an indicator lamp which is common for gross loss of pressure, drop in the level of brake fluid, or application of the parking brake, but shall have a separate indicator lamp for antilock brake system malfunction. However, the options provided in S5.3.1(a) shall not apply to a vehicle manufactured without a split service brake system; such a vehicle shall, to meet the requirements of S5.3.1(a), be equipped with a malfunction indicator that activates under the conditions specified in S5.3.1(a)(4). This warning indicator shall, instead of meeting the requirements of S5.3.2 through S5.3.5, activate (while the vehicle remains capable of meeting the requirements of S5.1.2.2 and the ignition switch is in the ''on'' position) a continuous or intermittent audible signal and a flashing warning light, displaying the words ''STOP-BRAKE FAILURE'' in block capital letters not less than one-quarter of an inch in height.

S5.3.1 An indicator lamp shall be activated when the ignition (start) switch is in the ''on'' (''run'') position and whenever any of the conditions (a) or (b), (c), (d), (e), (f), and (g) occur:

(a) A gross loss of pressure (such as caused by rupture of a brake line but not by a structural failure of a housing that is common to two or more subsystems) due to one of the following conditions (chosen at the option of the manufacturer):

(1) Before or upon application of a differential pressure of not more than 225 lb/in^2 between the active and failed brake system measured at a master cylinder outlet or a slave cylinder outlet.

(2) Before or upon application of 50 pounds of control force upon a fully manual service brake.

(3) Before or upon application of 25 pounds of control force upon a service brake with a brake power assist unit.

(4) When the supply pressure in a brake power unit drops to a level not less than one-half of the normal system pressure.

(b) A drop in the level of brake fluid in any master cylinder reservoir compartment to less than the recommended safe level specified by the manufacturer or to one-fourth of the

fluid capacity of that reservoir compartment, whichever is greater.

(c) A malfunction that affects the generation or transmission of response or control signals in an antilock brake system, or a total functional electrical failure in a variable proportioning brake system.

(d) Application of the parking brake.

(e) For a vehicle with electrically-actuated service brakes, failure of the source of electric power to the brakes, or diminution of state of charge of the batteries to less than a level specified by the manufacturer for the purpose of warning a driver of degraded brake performance.

(f) For a vehicle with electric transmission of the service brake control signal, failure of a brake control circuit.

(g) For an EV with RBS that is part of the service brake system, failure of the RBS.

S5.3.2 (a) Except as provided in paragraph (b) of this section, all indicator lamps shall be activated as a check of lamp function either when the ignition (start) switch is turned to the ''on'' (run) position when the engine is not running, or when the ignition (start) switch is in a position between ''on'' (run) and ''start'' that is designated by the manufacturer as a check position.

(b) The indicator lamps need not be activated when a starter interlock is in operation.

S5.3.3 (a) Each indicator lamp activated due to a condition specified in S5.3.1 shall remain activated as long as the malfunction exists, whenever the ignition (start) switch is in the ''on'' (run) position, whether or not the engine is running.

(b) For vehicles manufactured on and after September 1, 1999 with GVWRs greater than 10,000 lbs, each message about the existence of a malfunction, as described in S5.3.1(c), shall be stored in the antilock brake system after the ignition switch is turned to the ''off'' position and the indicator lamp shall be automatically reactivated when the ignition switch is again turned to the ''on'' position. The indicator lamp shall also be activated as a check of lamp function whenever the ignition is turned to the ''on'' (run) position. The indicator lamp shall be deactivated at the end of the check of lamp function unless there is a malfunction or a message about a malfunction that existed when the key switch was last turned to the ''off'' position.

S5.3.4 When an indicator lamp is activated it may be steady burning or flashing.

S5.3.5 (a) Each indicator lamp shall display word, words or abbreviation, in accordance with the requirements of Standard No. 101 (49 CFR 571.101) and/or this section, which shall have letters not less than ⅛-inch high and be legible to the driver in daylight when lighted. Words in addition to those required by Standard No. 101 and/or this section and symbols may be provided for purposes of clarity.

(b) If a single common indicator is used, the lamp shall display the word ''Brake''. The letters and background of a single common indicator shall be of contrasting colors, one of which is red.

(c)(1) If separate indicators are used for one or more of the conditions described in S5.3.1(a) through S5.3.1(g) of this standard, the indicator display shall include the word ''Brake'' and appropriate additional labeling, except as provided in (c)(1) (A) through (D) of this paragraph.

(A) If a separate indicator lamp is provided for gross loss of pressure, the words ''Brake Pressure'' shall be used for S5.3.1(a).

(B) If a separate indicator lamp is provided for low brake fluid, the words ''Brake Fluid'' shall be used for S5.3.1(b), except for vehicles using hydraulic system mineral oil.

(C) If a separate indicator lamp is provided for an anti-lock system, the single word ''Antilock'' or ''Anti-lock'', or the abbreviation ''ABS'', may be used for S5.3.1(c).

(D) If a separate indicator lamp is provided for application of the parking brake, the single word ''Park'' may be used for S5.3.1(d).

(E) If a separate indicator is used for the regenerative brake system, the symbol ''RBS'' may be used. RBS failure may also be indicated by a lamp displaying the symbol ''ABS/RBS.''

(2) Except for a separate indicator lamp for an anti-lock system, a regenerative system, or an indicator for both

anti-lock and regenerative system, the letters and background of each separate indicator lamp shall be of contrasting colors, one of which is red. The letters and background of a separate lamp for an anti-lock system, a regenerative system, or a lamp displaying both an anti-lock and a regenerative system shall be of contrasting colors, one of which is yellow.

S5.4 *Reservoirs.*

S5.4.1 *Master cylinder reservoirs.* A master cylinder shall have a reservoir compartment for each service brake subsystem serviced by the master cylinder. Loss of fluid from one compartment shall not result in a complete loss of brake fluid from another compartment.

S5.4.2 *Reservoir capacity.* Reservoirs, whether for master cylinders or other type systems, shall have a total minimum capacity equivalent to the fluid displacement resulting when all the wheel cylinders or caliper pistons serviced by the reservoirs move from a new lining, fully retracted position (as adjusted initially to the manufacturer's recommended setting) to a fully worn, fully applied position, as determined in accordance with S7.18(c) of this standard. Reservoirs shall have completely separate compartments for each subsystem except that in reservoir systems utilizing a portion of the reservoir for a common supply to two or more subsystems, individual partial compartments shall each have a minimum volume of fluid equal to at least the volume displaced by the master cylinder piston servicing the subsystem, during a full stroke of the piston. Each brake power unit reservoir servicing only the brake system shall have a minimum capacity equivalent to the fluid displacement required to charge the system piston(s) or accumulator(s) to normal operating pressure plus the displacement resulting when all the wheel cylinders or caliper pistons serviced by the reservoir or accumulator(s) move from a new lining fully retracted position (as adjusted initially to the manufacturer's recommended setting) to a fully worn, fully applied position.

S5.4.3 *Reservoir labeling*—Each vehicle equipped with hydraulic brakes shall have a brake fluid warning statement that reads as follows, in letters at least one-eighth of an inch high: ''WARNING, Clean filler cap before removing. Use only _____ fluid from a sealed container.'' (Inserting the recommended type of brake fluid as specified in 49 CFR 571.116, e.g., ''DOT 3''). The lettering shall be—

(a) Permanently affixed, engraved, or embossed;

(b) Located so as to be visible by direct view, either on or within 4 inches of the brake fluid reservoir filler plug or cap; and

(c) Of a color that contrasts with its background, if it is not engraved or embossed.

S5.5 *Antilock and variable proportioning brake systems.*

S5.5.1 Each vehicle with a GVWR greater than 10,000 pounds, except for any vehicle with a speed attainable in 2 miles of not more than 33 mph, shall be equipped with an antilock brake system that directly controls the wheels of at least one front axle and the wheels of at least one rear axle of the vehicle. On each vehicle with a GVWR greater than 10,000 pounds but not greater than 19,500 pounds and motor homes with a GVWR greater than 10,000 pounds but not greater than 22,500 pounds manufactured before March 1, 2001, the antilock brake system may also directly control the wheels of the rear drive axle by means of a single sensor in the driveline. Wheels on other axles of the vehicle may be indirectly controlled by the antilock brake system.

S5.5.2 In the event of any failure (structural or functional) in an antilock or variable proportioning brake system, the vehicle shall be capable of meeting the stopping distance requirements specified in S5.1.2 for service brake system partial failure. For an EV that is equipped with both ABS and RBS that is part of the service brake system, the ABS must control the RBS.

S5.6 *Brake system integrity.* Each vehicle shall be capable of completing all performance requirements of S5 without—

(a) Detachment or fracture of any component of the braking system, such as brake springs and brake shoe or disc pad facing, other than minor cracks

that do not impair attachment of the friction facing. All mechanical components of the braking system shall be intact and functional. Friction facing tearout (complete detachment of lining) shall not exceed 10 percent of the lining on any single frictional element.

(b) Any visible brake fluid or lubricant on the friction surface of the brake, or leakage at the master cylinder or brake power unit reservoir cover, seal and filler openings.

S6 *Test conditions.* The performance requirements of S5 shall be met under the following conditions. Where a range of conditions is specified, the vehicle shall be capable of meeting the requirements at all points within the range. Compliance of vehicles manufactured in two or more stages may, at the option of the final-stage manufacturer, be demonstrated to comply with this standard by adherence to the instructions of the incomplete manufacturer provided with the vehicle in accordance with § 568.4(a)(7)(ii) and § 568.5 of title 49 of the Code of Federal Regulations.

S6.1 *Vehicle weight.*

S6.1.1 Other than tests specified at lightly loaded vehicle weight in S7.7, S7.8, and S7.9, the vehicle is loaded to its GVWR such that the weight on each axle as measured at the tire-ground interface is in proportion to its GAWR, except that each fuel tank is filled to any level from 100 percent of capacity (corresponding to full GVWR) to 75 percent. However, if the weight on any axle of a vehicle at lightly loaded vehicle weight exceeds the axle's proportional share of the gross vehicle weight rating, the load required to reach GVWR is placed so that the weight on that axle remains the same as a lightly loaded vehicle weight.

S6.1.2 For the applicable tests specified in S7.7, S7.8, and S7.9, vehicle weight is lightly loaded vehicle weight, with the added weight distributed in the front passenger seat area in passenger cars, multipurpose passenger vehicles, and trucks, and in the area adjacent to the driver's seat in buses.

S6.2 *Electric vehicles and electric brakes.*

S6.2.1 The state of charge of the propulsion batteries is determined in accordance with SAE Recommended Practice J227a, *Electric Vehicle Test Procedure,* February 1976. The applicable sections of J227a are 3.2.1 through 3.2.4, 3.3.1 through 3.3.2.2, 3.4.1 and 3.4.2, 4.2.1, 5.2, 5.2.1, and 5.3.

S6.2.2 At the beginning of the first effectiveness test specified in S7.3, and at the beginning of each burnishing procedure, each EV's propulsion battery is at the maximum state of charge recommended by the manufacturer, as stated in the vehicle operator's manual or on a label that is permanently attached to the vehicle, or, if the manufacturer has made no recommendation, at a state of charge of not less than 95 percent. If a battery is replaced rather than recharged, the replacement battery is to be charged and measured for state of charge in accordance with these procedures. During each burnish procedure, each propulsion battery is restored to the recommended state of charge or a state of charge of not less than 95 percent after each increment of 40 burnish stops until each burnish procedure is complete. The batteries may be charged at a more frequent interval if, during a particular 40-stop increment, the EV is incapable of achieving the initial burnish test speed. During each burnish procedure, the propulsion batteries may be charged by an external means or replaced by batteries that are charged to the state of charge recommended by the manufacturer or a state of charge of not less than 95 percent. For EVs having a manual control for setting the level of regenerative braking, the manual control, at the beginning of each burnish procedure, is set to provide maximum regenerative braking throughout the burnish.

S6.2.3 At the beginning of each performance test in the test sequence (S7,3, S7.5, S7.7 through S7.11, and S7.13 through S7.19 of this standard), unless otherwise specified, each propulsion battery of an EV is at the maximum state of charge recommended by the manufacturer, as stated in the vehicle operator's manual or on a label that is permanently attached to the vehicle, or, if the manufacturer has made no recommendation, at a state of charge of not less than 95 percent. If batteries are replaced rather than recharged, each replacement battery shall be charged and measured for state of

charge in accordance with these procedures. No further charging of any propulsion battery occurs during any of the performance tests in the test sequence of this standard. If the propulsion batteries are depleted during a test sequence such that the vehicle reaches automatic shut-down, will not accelerate, or the low state of charge warning lamp is illuminated, the vehicle is to be accelerated to brake test speed by auxiliary means.

S6.2.4 (a) For an EV equipped with RBS, the RBS is considered to be part of the service brake system if it is automatically controlled by an application of the service brake control, if there is no means provided for the driver to disconnect or otherwise deactivate it, and if it is activated in all transmission positions, including neutral. The RBS is operational during all burnishes and all tests, except for the test of a failed RBS.

(b) For an EV equipped with an RBS that is not part of the service brake system, the RBS is operational and set to produce the maximum regenerative braking effect during the burnishes, and is disabled during the test procedures. If the vehicle is equipped with a neutral gear that automatically disables the RBS, the test procedures which are designated to be conducted in gear may be conducted in neutral.

S6.2.5 For tests conducted ''in neutral,'' the operator of an EV with no ''neutral'' position (or other means such as a clutch for disconnecting the drive train from the propulsion motor(s)) does not apply any electromotive force to the propulsion motor(s). Any electromotive force that is applied to the propulsion motor(s) automatically remains in effect unless otherwise specified by the test procedure.

S6.2.6 A vehicle equipped with electrically-actuated service brakes also performs the following test series. Conduct 10 stopping tests from a speed of 100 kph or the maximum vehicle speed, whichever is less. At least two of the 10 stopping distances must be less than or equal to 70 meters. The vehicle is loaded to GVWR for these tests and the transmission is in the neutral position when the service brake control is actuated and throughout the remainder of the test. The battery or batteries providing power to those electrically-actuated brakes, at the beginning of each test, shall be in a depleted state of charge for conditions (a), (b), or (c) of this paragraph as appropriate. An auxiliary means may be used to accelerate an EV to test speed.

(a) For an EV equipped with electrically-actuated service brakes deriving power from the propulsion batteries, and with automatic shut-down capability of the propulsion motor(s), the propulsion batteries are at not more than five percent above the EV actual automatic shut-down critical value. The critical value is determined by measuring the state-of-charge of each propulsion battery at the instant that automatic shut-down occurs and averaging the states-of-charge recorded.

(b) For an EV equipped with electrically-actuated service brakes deriving power from the propulsion batteries, and with no automatic shut-down capability of the propulsion motor(s), the propulsion batteries are at an average of not more than five percent above the actual state of charge at which the brake failure warning signal, required by S5.3.1(e) of this standard, is illuminated.

(c) For a vehicle which has an auxiliary battery (or batteries) that provides electrical energy to operate the electrically-actuated service brakes, the auxiliary battery(batteries) is (are) at (at an average of) not more than five percent above the actual state of charge at which the brake failure warning signal, required by S5.3.1(e) of this standard, is illuminated.

S6.3 *Tire inflation pressure.* Tire inflation pressure is the pressure recommended by the vehicle manufacturer for the GVWR of the vehicle.

S6.4 *Transmission selector control.* For S7.3, S7.5, S7.8, S7.15, S7.17, S7.11.1.2, S7.11.2.2, S7.11.3.2, and as required for S7.13, the transmission selector control is in neutral for all decelerations. For all other tests during all decelerations, the transmission selector is in the control position, other than overdrive, recommended by the manufacturer for driving on a level surface at the applicable test speed. To avoid engine stall during tests required to be run in gear

a manual transmission may be shifted to neutral (or the clutch disengaged) when the vehicle speed decreases to 20 mph.

S6.5 *Engine*. Engine idle speed and ignition timing settings are according to the manufacturer's recommendations. If the vehicle is equipped with an adjustable engine speed governor, it is adjusted according to the manufacturer's recommendation.

S6.6 *Vehicle openings*. All vehicle openings (doors, windows, hood, trunk, convertible top, cargo doors, etc.) are closed except as required for instrumentation purposes.

S6.7 *Ambient temperature*. The ambient temperature is any temperature between 32 °F. and 100 °F.

S6.8 *Wind velocity*. The wind velocity is zero.

S6.9 *Road surface*.

S6.9.1 For vehicles with a GVWR of 10,000 pounds or less, road tests are conducted on a 12-foot-wide, level roadway, having a skid number of 81. Burnish stops are conducted on any surface. The parking brake test surface is clean, dry, smooth, Portland cement concrete.

S6.9.2 For vehicles with a GVWR greater than 10,000 pounds, road tests are conducted on a 12-foot-wide, level roadway, having a peak friction coefficient of 0.9 when measured using an American Society for Testing and Materials (ASTM) E 1136 standard reference test tire, in accordance with ASTM Method E 1337–90, at a speed of 40 mph, without water delivery. Burnish stops are conducted on any surface. The parking brake test surface is clean, dry, smooth, Portland cement concrete.

S6.10 *Vehicle position and wheel lockup restrictions*. The vehicle is aligned in the center of the roadway at the start of each brake application. Stops, other than spike stops, are made without any part of the vehicle leaving the roadway.

S6.10.1 For vehicles with a GVWR of 10,000 pounds or less, stops are made with wheel lockup permitted only as follows:

(a) At vehicle speeds above 10 mph, there may be controlled wheel lockup on an antilock-equipped axle, and lockup of not more than one wheel per vehicle, uncontrolled by an antilock system. (Dual wheels on one side of an axle are considered a single wheel.)

(b) At vehicle speeds of 10 mph or less, any wheel may lock up for any duration.

(c) Unlimited wheel lockup is allowed during spike stops (but not spike check stops), partial failure stops, and inoperative brake power or power assist unit stops.

S6.10.2 For vehicles with a GVWR greater than 10,000 pounds, stops are made with wheel lockup permitted only as follows:

(a) At vehicle speeds above 20 mph, any wheel on a nonsteerable axle other than the two rearmost nonliftable, nonsteerable axles may lock up for any duration. The wheels on the two rearmost nonliftable, nonsteerable axles may lock up according to (b).

(b) At vehicle speeds above 20 mph, one wheel on any axle or two wheels on any tandem may lock up for any duration.

(c) At vehicle speeds above 20 mph, any wheel not permitted to lock in (a) or (b) may lock up repeatedly, with each lockup occurring for a duration of one second or less.

(d) At vehicle speeds of 20 mph or less, any wheel may lock up for any duration.

(e) Unlimited wheel lockup is allowed during partial failure stops, and inoperative brake power or power assist stops.

S6.11 *Thermocouples*. The brake temperature is measured by plug-type thermocouples installed in the approximate center of the facing length and width of the most heavily loaded shoe or disc pad, one per brake, as shown in figure 1. A second thermocouple may be installed at the beginning of the test sequence if the lining wear is expected to reach a point causing the first thermocouple to contact the metal rubbing surface of a drum or rotor. For centergrooved shoes or pads, thermocouples are installed within one-eighth of an inch to one-quarter inch of the groove and as close to the center as possible.

S6.12 *Initial brake temperature*. Unless otherwise specified the brake temperature is 150 °F. to 200 °F.

S6.13 *Control forces.* Unless otherwise specified, the force applied to a brake control is not less than 15 lb and not more than 150 lb.

S7. *Test procedures and sequence.* Each vehicle shall be capable of meeting all the applicable requirements of S5 when tested according to the procedures and in the sequence set forth below, without replacing any brake system part or making any adjustments to the brake system other than as permitted in the burnish and reburnish procedures and in S7.9 and S7.10. (For vehicles only having to meet the requirements of S5.1.1, S5.1.2 and S5.1.3 in section S5.1, the applicable test procedures and sequence are S7.1, S7.2, S7.4, S7.5, S7.8, S7.9, S7.10 and S7.18. However, at the option of the manufacturer, the following test procedures and sequence may be conducted: S7.1, S7.2, S7.3, S7.4, S7.5, S7.6, S7.7 S7.8, S7.9, S7.10 and S7.18. The choice of this option shall not be construed as adding to the requirements specified in S5.1.2 and S5.1.3.) Automatic adjusters must remain activated at all times. A vehicle shall be deemed to comply with the stopping distance requirements of S5.1 if at least one of the stops at each speed and load specified in each of S7.3, S7.5, S7.8, S7.9, S7.10, S7.15 and S7.17 (check stops) is made within a stopping distance that does not exceed the corresponding distance specified in Table II. When the transmission selector control is required to be in neutral for a deceleration, a stop or snub shall be obtained by the following procedures:

(a) Exceed the test speed by 4 to 8 mph;

(b) close the throttle and coast in gear to approximately 2 mph above the test speed;

(c) shift to neutral; and

(d) when the test speed is reached, apply the service brakes.

S7.1 *Brake warming.* If the initial brake temperature for the first stop in a test procedure (other than S7.7 and S7.16) has not been reached, heat the brakes to the initial brake temperature by making not more than 10 snubs from not more than 40 to 10 mph, at a deceleration not greater than 10 fpsps.

S7.2 *Pretest instrumentation check.* Conduct a general check of instrumentation by making not more than 10 stops from a speed of not more than 30 mph, or 10 snubs from a speed of not more than 40 to 10 mph, at a deceleration of not more than 10 fpsps. If instrument repair, replacement, or adjustment is necessary, make not more than 10 additional stops or snubs after such repair, replacement, or adjustment.

S7.3 *Service brake system—first (preburnish) effectiveness test.* Make six stops from 30 mph. Then make six stops from 60 mph.

S7.4 *Service brake system—burnish procedure.*

S7.4.1 *Vehicles with GVWR of 10,000 lb or less.*

S7.4.1.1 *Burnish.* Burnish the brakes by making 200 stops from 40 mph at 12 fpsps (the 150 lb control force limit does not apply here). The interval from the start of one service brake application to the start of the next shall be either the time necessary to reduce the initial brake temperature to between 230 °F. and 270 °F., or the distance of 1 mile, whichever occurs first. Accelerate to 40 mph after each stop and maintain that speed until making the next stop.

S7.4.1.2 *Brake adjustment—post burnish.* After burnishing, adjust the brakes in accordance with the manufacturer's published recommendations.

S7.4.2 *Vehicles with GVWR greater than 10,000 pounds.*

S7.4.2.1 *Burnish.* Vehicles are burnished according to the following procedures. Make 500 snubs between 40 mph and 20 mph at a deceleration rate of 10 f.p.s.p.s. Except where an adjustment is specified, after each brake application accelerate to 40 mph and maintain that speed until making the next brake application at a point 1 mile from the initial point of the previous brake application. If the vehicle cannot attain a speed of 40 mph in 1 mph, continue to accelerate until the vehicle reaches 40 mph or until the vehicle has traveled 1.5 miles from the initial point of the previous brake application, whichever occurs first. The brakes shall be adjusted three times during the burnish procedure, in accordance with the manufacturer's recommendations, after 125, 250, and 375 snubs.

S7.4.2.2 *Brake adjustment—post burnish.* After burnishing, adjust the brakes in accordance with the manufacturer's published recommendations.

S7.5 Service brake system-second effectiveness test. Repeat S7.3, except for vehicles with a GVWR greater than 10,000 lbs. Then, for vehicles with a GVWR of 10,000 pounds or less, make four stops from 80 mph if the speed attainable in 2 miles is not less 84 mph.

S7.6 *First reburnish.* Repeat S7.4, except make 35 burnish stops or snubs. In the case of vehicles burnished in accordance with S7.4.2.1(a) of this section, reburnish the vehicle by making 35 snubs from 60 to 20 mph, but if the hottest brake temperature reaches 500 °F ± 50 °F, make the remainder of the brake applications from the highest snub condition listed in Table IV that will maintain the hottest brake temperature at 500 °F ± 50 °F. If at a snub condition of 40 to 20 mph, the temperature of the hottest brake exceeds 550 °F, make the remainder of the 35 brake applications from the snub condition without regard to brake temperature.

S7.7 *Parking brake test.* The parking brake tests for any vehicle on different grades, in different directions, and for different loads may be conducted in any order. The force required for actuation of a hand-operated brake system shall be measured at the center of the hand grip area or at a distance of 1½ inches from the end of the actuation lever, as illustrated in Figure II.

S7.7.1 *Test procedure for requirements of S5.2.1.*

S7.7.1.1 Condition the parking brake friction elements so that the temperature at the beginning of the test is at any level not more than 150 °F. (when the temperature of components on both ends of an axle are averaged).

S7.7.1.2 Drive the vehicle, loaded to GVWR, onto the specified grade with the longitudinal axis of the vehicle in the direction of the slope of the grade, stop the vehicle and hold it stationary by application of the service brake control, and place the transmission in neutral.

S7.7.1.3 With the vehicle held stationary by means of the service brake control, apply the parking brake by a single application of the force specified in (a), (b), or (c) of this paragraph, except that a series of applications to achieve the specified force may be made in the case of a parking brake system design that does not allow the application of the specified force in a single application:

(a) In the case of a passenger car or other vehicle with a GVWR of 10,000 lbs. or less, not more than 125 pounds for a foot-operated system, and not more than 90 pounds for a hand-operated system; and

(b) In the case of a school bus with a GVWR greater than 10,000 lbs. not more than 150 pounds for a foot-operated system, and not more than 125 pounds for a hand-operated system.

(c) For a vehicle using an electrically-activated parking brake, apply the parking brake by activating the parking brake control.

S7.7.1.4 Following the application of the parking brake in accordance with S7.7.1.3, release all force on the service brake control and commence the measurement of time if the vehicle remains stationary. If the vehicle does not remain stationary, reapplication of the service brake to hold the vehicle stationary, with reapplication of a force to the parking brake control at the level specified in S7.7.1.3 (a) or (b) as appropriate for the vehicle being tested (without release of the ratcheting or other holding mechanism of the parking brake) may be used twice to attain a stationary position.

S7.7.1.5 Following observation of the vehicle in a stationary condition for the specified time in one direction, repeat the same test procedure with the vehicle orientation in the opposite direction on the specified grade.

S7.7.1.6 Check the operation of the parking brake application indicator required by S5.3.1(d).

S7.7.2 *Test procedure for requirements of S5.2.2* (a) Check that transmission must be placed in park position to release key;

(b) Test as in S7.7.1, except in addition place the transmission control to engage the parking mechanism; and

(c) Test as in S7.7.1 except on a 20 percent grade, with the parking mechanism not engaged.

S7.7.3 *Lightly loaded vehicle.* Repeat S7.7.1 or S7.7.2 as applicable except

with the vehicle at lightly loaded vehicle weight.

S7.7.4 *Non-service brake type parking brake systems.* For vehicles with parking brake systems not utilizing the service brake friction elements, burnish the friction elements of such systems prior to parking brake tests according to the manufacturer's published recommendations as furnished to the purchaser. If no recommendations are furnished, run the vehicle in an unburnished condition.

S7.8 *Service brake system—lightly loaded vehicle (third effectiveness) test.* Make six stops from 60 mph with vehicle at lightly loaded vehicle weight. (This test is not applicable to a vehicle which both has a GVWR of not less than 8,000 pounds and not greater than 10,000 pounds and is not a school bus.)

S7.9 *Service brake system test—partial failure.*

S7.9.1 With the vehicle at lightly loaded vehicle weight, alter the service brake system to produce any one rupture or leakage type of failure, other than a structural failure of a housing that is common to two or more subsystems. Determine the control force, pressure level, or fluid level (as appropriate for the indicator being tested) necessary to activate the brake system indicator lamp. Make four stops if the vehicle is equipped with a split service brake system, or 10 stops if the vehicle is not so equipped, each from 60 mph, by a continuous application of the service brake control. Restore the service brake system to normal at completion of this test.

S7.9.2 Repeat S7.9.1 for each of the other subsystems.

S7.9.3 Repeat S7.9.1 and S7.9.2 with vehicle at GVWR. Restore the service brake system to normal at completion of this test.

S7.9.4 (For vehicles with antilock and/or variable proportioning brake systems.) With vehicle at GVWR, disconnect functional power source, or otherwise render antilock system inoperative. Disconnect variable proportioning brake system. Make four stops, each from 60 mph. If more than one antilock or variable proportioning brake subsystem is provided, disconnect or render one subsystem inoperative and run as above. Restore system to normal at completion of this test. Repeat for each subsystem provided.

Determine whether the brake system indicator lamp is activated when the electrical power source to the antilock or variable proportioning unit is disconnected.

S7.9.5 For a vehicle in which the brake signal is transmitted electrically between the brake pedal and some or all of the foundation brakes, regardless of the means of actuation of the foundation brakes, the tests in S7.9.1 through S7.9.3 of this standard are conducted by inducing any single failure in any circuit that electrically transmits the brake signal, and all other systems intact. Determine whether the brake system indicator lamp is activated when the failure is induced.

S7.9.6 For an EV with RBS that is part of the service brake system, the tests specified in S7.9.1 through S7.9.3 are conducted with the RBS disconnected and all other systems intact. Determine whether the brake system indicator lamp is activated when the RBS is disconnected.

S7.10 *Service brake system—inoperative brake power unit or brake power assist unit test.* (For vehicles equipped with brake power unit or brake power assist unit.)

S7.10.1 *Regular procedure.* (This test need not be run if the option in S7.10.2 is selected.) On vehicles with brake power assist units, render the brake power assist unit inoperative, or one of the brake power assist unit subsystems if two or more subsystems are provided, by disconnecting the relevant power supply. Exhaust any residual brake power reserve capability of the disconnected system. On vehicles with brake power units, disconnect the primary source of power. Make four stops, each from 60 mph by a continuous application of the service brake control. Restore the system to normal at completion of this test. For vehicles equipped with more than one brake power unit or brake power assist unit, conduct tests of each in turn.

S7.10.2 *Optional Procedures.* On vehicles with brake power assist units, the unit is charged to maximum prior to start of test. (Engine may be run up in speed, then throttle closed quickly to

attain maximum charge on vacuum assist units.) Brake power units shall also be charged to maximum accumulator pressure prior to start of test. No recharging is allowed after start of test.

(a) (For vehicles with brake power assist units.) Disconnect the primary source of power. Make six stops each from 60 mph, to achieve the average deceleration for each stop as specified in table III. Apply the brake control as quickly as possible. Maintain control force until vehicle has stopped.

At the completion of the stops specified above, deplete the system of any residual brake power reserve capability. Make one stop from 60 mph at an average deceleration of not lower than 7 fpsps for passenger cars (equivalent stopping distance 554 feet), or 6 fpsps for vehicles other than passenger cars (equivalent stopping distance 646 feet) and determine whether the control force exceeds 150 pounds.

(b) (For vehicles with brake power units with accumulator type systems.) Test as in S7.10.2(a), except make 10 stops instead of 6 and, at the completion of the 10 stops, deplete the failed element of the brake power unit of any residual brake power reserve capability before making the final stop.

(c) (For vehicles with brake power assist or brake power units with backup systems.) If the brake power or brake power assist unit operates in conjunction with a backup system and the backup system is activated automatically in the event of a primary power failure, the backup system is operative during this test. Disconnect the primary source of power of one subsystem. Make 15 stops, each from 60 mph, with the backup system activated for the failed subsystem, to achieve an average deceleration of 12 fpsps for each stop.

(d) Restore systems to normal at completion of these tests. For vehicles equipped with more than one brakepower assist or brakepower unit, conduct tests of each in turn.

S7.10.3 *Electric brakes.*

(a) For vehicles with electrically-actuated service brakes, the tests in S7.10.1 or S7.10.2 are conducted with any single electrical failure in the electric brake system instead of the brake power or brake power assist systems, and all other systems intact.

(b) For EVs with RBS that is part of the service brake system, the tests in S7.10.1 or S7.10.2 are conducted with the RBS discontinued and all other systems intact.

S7.11 *Service brake system—first fade and recovery test.*

S7.11.1 *Baseline check stops or snubs.*

S7.11.1.1 *Vehicles with GVWR of 10,000 lb or less.* Make three stops from 30 mph at 10 fpsps for each stop. Control force readings may be terminated when vehicle speed falls to 5 mph. Average the maximum brake control force required for the three stops.

S7.11.1.2 *Vehicles with GVWR greater than 10,000 pounds.* With transmission in neutral (or declutched), make three snubs from 40 to 20 mph at 10 fpsps for each snub. Average the maximum brake control force required for the three snubs.

S7.11.2 *Fade stops or snubs.*

S7.11.2.1 *Vehicles with GVWR of 10,000 pounds or less.* Make 5 stops from 60 mph at 15 fpsps followed by 5 stops at the maximum attainable deceleration between 5 and 15 fpsps for each stop. Establish an initial brake temperature before the first brake application of 130° to 150 °F. Initial brake temperatures before brake applications for subsequent stops are those occurring at the distance intervals. Attain the required deceleration within 1 second and, as a minimum, maintain it for the remainder of the stopping time. Control force readings may be terminated when vehicle speed falls to 5 mph. Leave an interval of 0.4 mi between the start of brake applications. Accelerate immediately to the initial test speed after each stop. Drive 1 mi at 30 mph after the last fade stop, and immediately follow the recovery procedure specified in S7.11.3.1.

S7.11.2.2 *Vehicles with GVWR greater than 10,000 lb.* With transmission in neutral (or declutched) make 10 snubs from 40 to 20 mph at 10 fpsps for each snub. Establish an initial brake temperature before the first brake application of 130 °F. to 150 °F. Initial brake temperatures before brake application for subsequent snubs are those occurring in the time intervals specified below. Attain the required deceleration

within 1 s and maintain it for the remainder of the snubbing time. Leave an interval of 30 s between snubs (start of brake application to start of brake application). Accelerate immediately to the initial test speed after each snub. Drive for 1.5 mi at 40 mph after the last snub and immediately follow the recovery procedure specified in S7.11.3.2.

S7.11.3 *Recovery stops or snubs.*

S7.11.3.1 *Vehicles with GVWR of 10,000 lb or less.* Make five stops from 30 mph at 10 fpsps for each stop. Control force readings may be terminated when vehicle speed falls to 5 mph. Allow a braking distance interval of 1 mi. Immediately after each stop accelerate at maximum rate to 30 mph and maintain that speed until making the next stop. Record the maximum control force for each stop.

S7.11.3.2 *Vehicles with GVWR greater than 10,000 lb.* With transmission in neutral (or declutched) make five snubs from 40 to 20 mph at 10 fpsps for each snub. After each snub, accelerate at maximum rate to 40 mph and maintain that speed until making the next brake application at a point 1.5 mi from the point of the previous brake application. Record the maximum control force for each snub.

S7.12 *Service brake system—second reburnish.* Repeat S7.6.

S7.13 *Service brake system—second fade and recovery test.* Repeat S7.11 except in S7.11.2 run 15 fade stops or 20 snubs instead of 10.

S7.14 *Third reburnish.* Repeat S7.6.

S7.15 *Service brake system—fourth effectiveness test.* Repeat S7.5. Then (for passenger cars) make four stops from either 95 mph if the speed attainable in 2 mi is 99 to (but not including) 104 mph, or 100 mph if the speed attainable in 2 mi is 104 mph or greater.

S7.16 *Service brake system—water recovery test.*

S7.16.1 *Baseline check stop.* Make three stops from 30 mph at 10 fpsps for each stop. Control force readings may be terminated when vehicle speed falls to 5 mph. Average the maximum brake control force required for the three stops.

S7.16.2 *Wet brake recovery stops.* With the brakes fully released at all times, drive the vehicle for 2 min at a speed of 5 mph in any combination of forward and reverse directions, through a trough having a water depth of 6 in. After leaving the trough, immediately accelerate at a maximum rate to 30 mph without a brake application. Immediately upon reaching that speed make five stops, each from 30 mph at 10 fpsps for each stop. After each stop (except the last), accelerate the vehicle immediately at a maximum rate to a speed of 30 mph and begin the next stop.

S7.17 *Spike stops.* Make 10 successive spike stops from 30 mph with the transmission in neutral, with no reverse stops. Make spike stops by applying a control force of 200 lb while recording control force versus time. Maintain control force until vehicle has stopped. At completion of 10 spike stops, make six effectiveness stops from 60 mph.

S7.18 *Final inspection.* Inspect—

(a) The service brake system for detachment or fracture of any components, such as brake springs and brake shoes or disc pad facing.

(b) The friction surface of the brake, the master cylinder or brake power unit reservoir cover and seal and filler openings, for leakage of brake fluid or lubricant.

(c) The master cylinder or brake power unit reservoir for compliance with the volume and labeling requirements of S5.4.2 and S5.4.3. In determining the fully applied worn condition assume that the lining is worn to: (1) Rivet or bolt heads on riveted or bolted linings, or (2) within one thirty-seconds of an inch of shoe or pad mounting surface on bonded linings, or (3) the limit recommended by the manufacturer, whichever is larger relative to the total possible shoe or pad movement. Drums or rotors are assumed to be at nominal design drum diameter or rotor thickness. Linings are assumed adjusted for normal operating clearance in the released position.

(d) The brake system indicator light(s), for compliance with operation in various key positions, lens color, labeling, and location, in accordance with S5.3.

S7.19 *Moving barrier test.* (Only for vehicles that have been tested according to S7.7.2.) Load the vehicle to GVWR, release parking brake, and

place the transmission selector control to engage the parking mechanism. With a moving barrier as described in paragraph 3.3 of SAE recommended practice J972 ''Moving Barrier Collision Tests,'' November 1966, impact the vehicle from the front at 2½ mph. Keep the longitudinal axis of the barrier parallel with the longitudinal axis of the vehicle. Repeat the test, impacting the vehicle from the rear.

NOTE: The vehicle used for this test need not be the same vehicle that has been used for the braking tests.

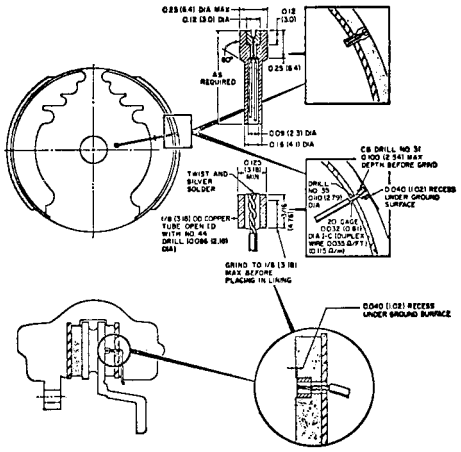

FIGURE 1—TYPICAL PLUG THERMOCOUPLE INSTALLATIONS

NOTE: The second thermocouple shall be installed at .080 inch depth within 1 inch circumferentially of the thermocouple installed at .040 inch depth.

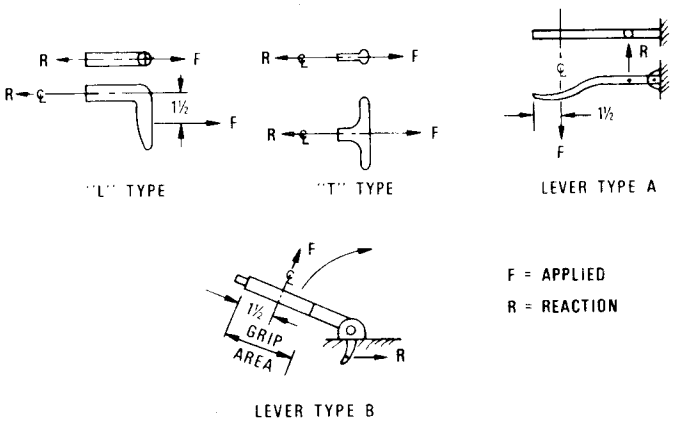

LOCATION FOR MEASURING BRAKE APPLICATION FORCE (HAND BRAKE)

TABLE I—BRAKE TEST PROCEDURE SEQUENCE AND REQUIREMENTS

No.—Sequence	Test load		Test procedure	Requirements
	Light	GVWR		
1 Instrumentation check	.....	.....	S7.2	.....
2 First (preburnish) effectiveness test	.....	×	S7.3	S5.1.1.1
3 Burnish procedure	.....	×	S7.4	.....
4 Second effectiveness	.....	×	S7.5	S5.1.1.2
5 First reburnish	.....	×	S7.6	.....
6 Parking brake	×	×	S7.7	S5.2
7 Third effectiveness (lightly loaded vehicle)	×	.....	S7.8	S5.1.1.3
8 Partial failure	×	×	S7.9	S5.1.2
9 Inoperative brake power and power assist units	.....	×	S7.10	S5.1.3
10 First fade and recovery	.....	×	S7.11	S5.1.4
11 Second reburnish	.....	×	S7.12	.....
12 Second fade and recovery	.....	×	S7.13	S5.1.4
13 Third reburnish	.....	×	S7.14	.....
14 Fourth effectiveness	.....	×	S7.15	S5.1.1.4
15 Water recovery	.....	×	S7.16	S5.1.5
16 Spike stops	.....	×	S7.17	S5.1.6
17 Final inspection	.....	.....	S7.18	S5.6
18 Moving barrier test	.....	×	S7.19	S5.2.2.3

TABLE II - STOPPING DISTANCES

Vehicle Test Speed (miles per hour)	Stopping Distance in feet for tests indicated															
	I-1st (preburnished) & 4th effectiveness; spike effectiveness check				II-2d effectiveness				III-3d (lightly loaded vehicles) effectiveness					IV-Inoperative brake power and power assist unit; partial failure		
	(a)	(b)	(c)	(d)	(a)	(b) & (c)	(d)	(e)	(a)	(b)	(c)	(d)	(e)	(a)	(b) & (c)	(d) & (e)
30	[1]57	[1,2]65	[1,2]69 (1st) [1,2]65 (4th and spike) [1]72	88	[1]54	[1]57	78	[1,2]70	51	57	65	84	70	114	130	170
35	74	83	91	132	70	74	106	96	67	74	83	114	96	155	176	225
40	96	108	119	173	91	96	138	124	87	96	108	149	124	202	229	288
45	121	137	150	218	115	121	175	158	110	121	137	189	158	257	291	358
50	150	169	185	264	142	150	216	195	135	150	169	233	195	317	359	435
55	181	204	224	326	172	181	261	236	163	181	204	281	236	383	433	530
60	[1]216	[1]242	[1]267	388	[1]204	[1]216	[1]310	[1]280	[1]194	[1]216	[1]242	[1]335	[1]280	[1]456	[1]517	[1]613
80	[1]405	[1]459	[1]510	NA	[1]383	NA	NA	NA	NA	NA	NA	NA	NA	NA	NA	NA
95	[1]607	NA	NA	NA	NA	NA	NA	NA	NA	NA	NA	NA	NA	NA	NA	NA
100	[1]673	NA	NA	NA	NA	NA	NA	NA	NA	NA	NA	NA	NA	NA	NA	NA

[1] Distance for specified tests. [2] Applicable to school buses only. NA = Not applicable

Note: (a) Passenger cars; (b) vehicles other than passenger cars with GVWR of less than 8,000 lbs; (c) Vehicles with GVWR of not less than 8,000 lbs and not more than 10,000 lbs; (d) vehicles, other than buses, with GVWR greater than 10,000 lbs; (e) buses, including school buses, with GVWR greater than 10,000 lbs.

TABLE III—INOPERATIVE BRAKE POWER ASSIST AND BRAKE POWER UNITS

Stop No.	Average deceleration, FPSPS				Equivalent stopping distance, feet			
	Column 1—brake power assist		Column 2—brake power unit		Column 3—brake power assist		Column 4—brake power unit	
	(a)	(b) and (c)	(a)	(b) and (c)	(a)	(b) and (c)	(a)	(b) and (c)
1	16.0	14.0	16.0	13.0	242	277	242	298
2	12.0	12.0	13.0	11.0	323	323	298	352
3	10.0	10.0	12.0	10.0	388	388	323	388
4	9.0	8.5	11.0	9.5	431	456	352	409
5	8.0	7.5	10.0	9.0	484	517	388	431
6	7.5	6.7	9.5	8.5	517	580	409	456
7	[1] 7.0	[1] 6.0	9.0	8.0	554	646	431	484
8	NA	NA	8.5	7.5	NA	NA	456	517
9	NA	NA	8.0	7.0	NA	NA	484	554
10	NA	NA	7.5	6.5	NA	NA	517	596
11	NA	NA	[1] 7.0	[1] 6.0	NA	NA	554	646

[1] Depleted. (a) Passenger cars; (b) vehicles other than passenger cars with GVWR of 10,000 lbs or less; (c) vehicles with GVWR greater than 10,000 lbs; NA=Not applicable.

[41 FR 29696, July 19, 1976; 41 FR 32221, Aug. 2, 1976, as amended at 41 FR 36026, 36027, Aug. 26, 1976; 43 FR 9606, Mar. 9, 1978; 46 FR 64, Jan. 2, 1981; 46 FR 21180, Apr. 9, 1981; 47 FR 61893, Dec. 21, 1981; 48 FR 39941, Sept. 2, 1983; 49 FR 30199, July 27, 1984; 52 FR 19874, May 28, 1987; 53 FR 8200, Mar. 14, 1988; 54 FR 22905, May 30, 1989; 54 FR 40082, Sept. 29, 1989; 57 FR 47800, Oct. 20, 1992; 58 FR 45461, Aug. 30, 1993; 60 FR 6434, Feb. 2, 1995; 60 FR 13256 and 13303, Mar. 10, 1995; 61 FR 19562, May 2, 1996; 62 FR 46917, Sept. 5, 1997; 62 FR 51069, Sept. 30, 1997; 64 FR 9449, Feb. 26, 1999; 64 FR 48564, Sept. 7, 1999; 65 FR 6331, Feb. 9, 2000]

§ 571.106 Standard No. 106; Brake hoses.

S1. *Scope*. This standard specifies labeling and performance requirements for motor vehicle brake hose, brake hose assemblies, and brake hose end fittings.

S2. *Purpose*. The purpose of this standard is to reduce deaths and injuries occurring as a result of brake system failure from pressure or vacuum loss due to hose or hose assembly rupture.

S3. *Application*. This standard applies to passenger cars, multipurpose passenger vehicles, trucks, buses, trailers, and motorcycles, and to hydraulic, air, and vacuum brake hose, brake hose assemblies, and brake hose end fittings for use in those vehicles.

S4. *Definitions*.

Armor means protective material installed on a brake hose to increase the resistance of the hose or hose assembly to abrasion or impact damage.

Brake hose means a flexible conduit, other than a vacuum tubing connector, manufactured for use in a brake system to transmit or contain the fluid pressure or vacuum used to apply force to a vehicle's brakes. For hose, a dimensional description such as ''¼-inch hose'' refers to the nominal inside diameter. For tubing, a dimensional description such as ''¼-in tubing'' refers to the nominal outside diameter.

Brake hose assembly means a brake hose, with or without armor, equipped with end fittings for use in a brake system, but does not include an air or vacuum assembly prepared by the owner or operator of a used vehicle, by his employee, or by a repair facility, for installation in that used vehicle.

Brake hose end fitting means a coupler, other than a clamp, designed for attachment to the end of a brake hose.

Free length means the linear measurement of hose exposed between the end fittings of a hose assembly in a straight position.

Permanently attached end fitting means an end fitting that is attached by deformation of the fitting about the hose by crimping or swaging, or an end fitting that is attached by use of a sacrificial sleeve or ferrule that requires replacement each time a hose assembly is rebuilt.

Rupture means any failure that results in separation of a brake hose from its end fitting or in leakage.

Vacuum tubing connector means a flexible conduit of vacuum that (i) connects metal tubing to metal tubing in a brake system, (ii) is attached without end fittings, and (iii) when installed, has an unsupported length less than the total length of those portions that cover the metal tubing.

S5. *Requirements—hydraulic brake hose, brake hose assemblies, and brake hose end fittings*.

S5.1 *Construction*. (a) Each hydraulic brake hose assembly shall have permanently attached brake hose end fittings which are attached by deformation of the fitting about the hose by crimping or swaging.

(b) Each hydraulic brake hose assembly that is equipped with a permanent supplemental support integrally attached to the assembly and is manufactured as a replacement for use on a vehicle not equipped, as an integral part of the vehicle's original design, with a means of attaching the support to the vehicle shall be equipped with a bracket that is integrally attached to the supplemental support and that adapts the vehicle to properly accept this type of brake hose assembly.

S5.2 *Labeling*.

S5.2.1 Each hydraulic brake hose, except hose sold as part of a motor vehicle, shall have at least two clearly identifiable stripes of at least one-sixteenth of an inch in width, placed on opposite sides of the brake hose parallel to its longitudinal axis. One stripe may be interrupted by the information required by S5.2.2, and the other stripe

may be interrupted by additional information at the manufacturer's option. However, hydraulic brake hose manufactured for use only in an assembly whose end fittings prevent its installation in a twisted orientation in either side of the vehicle, need not meet the requirements of S5.2.1.

S5.2.2 Each hydraulic brake hose shall be labeled, or cut from bulk hose that is labeled, at intervals of not more than 6 inches, measured from the end of one legend to the beginning of the next, in block capital letters and numerals at least one-eighth of an inch high, with the information listed in paragraphs (a) through (e) of this section. The information need not be present on hose that is sold as part of a brake hose assembly or a motor vehicle.

(a) The symbol DOT, constituting a certification by the hose manufacturer that the hose conforms to all applicable motor vehicle safety standards.

(b) A designation that identifies the manufacturer of the hose, which shall be filed in writing with: Office of Crash Avoidance Standards, Vehicle Dynamics Division, National Highway Traffic Safety Administration, 400 Seventh Street, SW., Washington, DC 20590. The marking may consist of a designation other than block capital letters required by S5.2.2.

(c) The month, day, and year, or the month and year, of manufacture, expressed in numerals. For example, 10/1/96 means October 1, 1996.

(d) The nominal inside diameter of the hose expressed in inches or fractions of inches, or in millimeters followed by the abbreviation ''mm.''

(e) Either ''HR'' to indicate that the hose is regular expansion hydraulic hose or ''HL'' to indicate that the hose is low expansion hydraulic hose.

S5.2.3 *Package labeling for brake hose assemblies designed to be used with a supplemental support.* (a) Each hydraulic brake hose assembly that is equipped with a permanent supplemental support integrally attached to the assembly and is manufactured as a replacement assembly for a vehicle equipped, as an integral part of the vehicle's original design, with a means of attaching the support to the vehicle shall be sold in a package that is marked or labeled as follows: ''FOR USE ON [*insert Manufacturer, Model Name*] ONLY'';

(b) Each hydraulic brake hose assembly that is equipped with a permanent supplemental support integrally attached to the assembly and is manufactured as a replacement for use on a vehicle not equipped, as an integral part of the vehicle's original design, with a means of attaching the support to the vehicle shall comply with paragraphs (a) (1) and (2) of this section:

(1) Be sold in a package that is marked or labeled as follows: ''FOR USE ONLY WITH A SUPPLEMENTAL SUPPORT.''

(2) Be accompanied by clear, detailed instructions explaining the proper installation of the brake hose and the supplemental support bracket to the vehicle and the consequences of not attaching the supplemental support bracket to the vehicle. The instructions shall be printed on or included in the package specified in paragraph (a)(1) of this section.

S5.2.4 Each hydraulic brake hose assembly, except those sold as part of a motor vehicle, shall be labeled by means of a band around the brake hose assembly as specified in this paragraph or, at the option of the manufacturer, by means of labeling as specified in S5.2.4.1. The band may at the manufacturer's option be attached so as to move freely along the length of the assembly, as long as it is retained by the end fittings. The band shall be etched, embossed, or stamped in block capital letters, numerals or symbols at least one-eighth of an inch high, with the following information:

(a) The symbol DOT constituting certification by the hose assembler that the hose assembly conforms to all applicable motor vehicle safety standards.

(b) A designation that identifies the manufacturer of the hose assembly, which shall be filed in writing with: Office of Crash Avoidance Standards, Vehicle Dynamics Division, National Highway Traffic Safety Administration, 400 Seventh Street SW., Washington, DC 20590. The designation may consist of block capital letters, numerals or a symbol.

S5.2.4.1 At least one end fitting of a hydraulic brake hose assembly shall be etched, stamped or embossed with a designation at least one-sixteenth of an inch high that identifies the manufacturer of the hose assembly and is filed in accordance with S5.2.4(b).

S5.3 *Test requirements.* A hydraulic brake hose assembly or appropriate part thereof shall be capable of meeting any of the requirements set forth under this heading, when tested under the conditions of S11 and the applicable procedures of S6. However, a particular hose assembly or appropriate part thereof need not meet further requirements after having been subjected to and having met the constriction requirement (S5.3.1) and any one of the requirements specified in S5.3.2 through S5.3.11.

S5.3.1 *Constriction.* Except for that part of an end fitting which does not contain hose, every inside diameter of any section of a hydraulic brake hose assembly shall be not less than 64 percent of the nominal inside diameter of the brake hose.

S5.3.2 *Expansion and burst strength.* The maximum expansion of a hydraulic brake hose assembly at 1,000 psi and 1,500 psi shall not exceed the values specified in Table I (S6.1). The hydraulic brake hose assembly shall then withstand water pressure of 4,000 psi for 2 minutes without rupture, and shall not rupture at less than 5,000 psi (S6.2).

TABLE 1—MAXIMUM EXPANSION OF FREE LENGTH BRAKE HOSE, CC/FT.

Hydraulic brake hose, inside diameter	Test Pressure			
	1,000 psi		1,500 psi	
	Regular expansion hose	Low expansion hose	Regular expansion hose	Low expansion hose
⅛ inch or 3 mm or less	0.66	0.33	0.79	0.42
3/16 inch or 4 to 5 mm	.86	.55	1.02	.72
¼ inch or 6 mm or more	1.04	.82	1.30	1.17

S5.3.3 *Whip resistance.* A hydraulic brake hose assembly shall not rupture when run continuously on a flexing machine for 35 hours (S6.3).

S5.3.4 *Tensile strength.* A hydraulic brake hose assembly shall withstand a pull of 325 pounds without separation of the hose from its end fittings (S6.4).

S5.3.5 *Water absorption and burst strength.* A hydraulic brake hose assembly, after immersion in water for 70 hours (S6.5), shall withstand water pressure of 4,000 psi for 2 minutes, and then shall not rupture at less than 5,000 psi (S6.2).

S5.3.6 *Water absorption and tensile strength.* A hydraulic brake hose assembly, after immersion in water for 70 hours (S6.5), shall withstand a pull of 325 pounds without separation of the hose from its end fittings (S6.4).

S5.3.7 *Water absorption and whip resistance.* A hydraulic brake hose assembly, after immersion in water for 70 hours (S6.5), shall not rupture when run continuously on a flexing machine for 35 hours (S6.3).

S.5.3.8 *Low-temperature resistance.* A hydraulic brake hose conditioned at minus 40 °F. for 70 hours shall not show cracks visible without magnification when bent around a cylinder as specified in S6.6. (S6.6)

S5.3.9 *Brake fluid compatibility, constriction, and burst strength.* Except for brake hose assemblies designed for use with mineral or petroleum-based brake fluids, a hydraulic brake hose assembly shall meet the constriction requirement of S5.3.1 after having been subjected to a temperature of 200 °F for 70 hours while filled with SAE RM–66–04 Compatibility Fluid, as described in appendix B of SAE Standard J1703 JAN 1995, ''Motor Vehicle Brake Fluid.'' It shall then withstand water pressure of 4,000 psi for 2 minutes and thereafter shall not rupture at less than 5,000 psi (S6.2). (SAE RM–66–03 Compatibility Fluid, as described in appendix A of SAE Standard J1703 NOV83, ''Motor Vehicle Brake Fluid,'' November 1983, may be used in place of SAE RM–66–04 until January 1, 1995.)

S5.3.10 *Ozone resistance.* A hydraulic brake hose shall not show cracks visible under 7-power magnification after exposure to ozone for 70 hours at 104 °F. (S6.8).

S5.3.11 *End fitting corrosion resistance.* After 24 hours of exposure to salt spray, a hydraulic brake hose end fitting shall show no base metal corrosion on the end fitting surface except where crimping or the application of labeling

information has caused displacement of the protective coating. (S6.9)

S6. *Test procedures—Hydraulic brake hose, brake hose assemblies, and brake hose end fittings.*

S6.1. *Expansion test.*

S6.1.1 *Apparatus.* Utilize a test apparatus (as shown in Figure 1) which consists of:

(a) Source for required fluid pressure;

(b) Test fluid of water without any additives and free of gases;

(c) Reservoir for test fluid;

(d) Pressure gauges;

(e) Brake hose end fittings in which to mount the hose vertically; and

(f) Graduate burette with 0.05 cc increments.

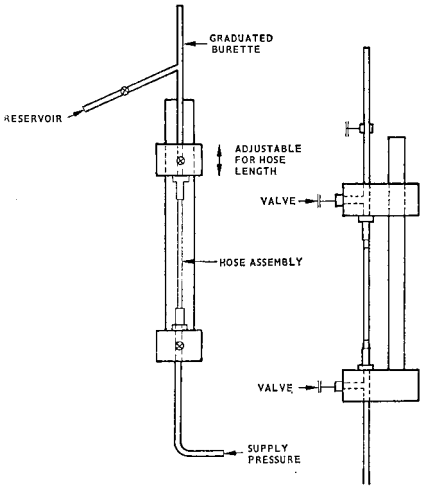

FIG. 1. EXPANSION TEST APPARATUS

S6.1.2 *Preparation.* (a) Measure the free length of the hose assembly.

(b) Mount the hose so that it is in a vertical straight position without tension when pressure is applied.

(c) Fill the hose with test fluid and bleed all gases from the system.

(d) Close the valve to the burette and apply 1,500 psi for 10 seconds; then release pressure.

S6.1.3 *Calculation of expansion at 1,000 and 1,500 psi.* (a) Adjust the fluid level in the burette to zero.

(b) Close the valve to the burette, apply pressure at the rate of 15,000 psi per minute, and seal 1,000 psi in the hose (1,500 psi in second series).

(c) After 3 seconds open the valve to the burette for 10 seconds and allow the fluid in the expanded hose to rise into the burette.

(d) Repeat the procedure in steps (b) and (c) twice. Measure the amount of test fluid which has accumulated in the burette as a result of the three applications of pressure.

(e) Calculate the volumetric expansion per foot by dividing the total accumulated test fluid by 3 and further dividing by the free length of the hose in feet.

S6.2 *Burst strength test.* (a) Connect the brake hose to a pressure system and fill it completely with water, allowing all gases to escape.

(b) Apply water pressure of 4,000 psi at a rate of 15,000 psi per minute.

(c) After 2 minutes at 4,000 psi, increase the pressure at the rate of 15,000 psi per minute until the pressure exceeds 5,000 psi.

S6.3 *Whip resistance test.*

S6.3.1 *Apparatus.* Utilize test apparatus that is dynamically balanced and includes:

(a) A movable header consisting of a horizontal bar equipped with capped end fittings and mounted through bearings at each end to points 4 inches from the center of two vertically rotating disks whose edges are in the same vertical plane;

(b) An adjustable stationary header parallel to the movable header in the same horizontal plane as the centers of the disks, and fitted with open end fittings;

(c) An elapsed time indicator; and

(d) A source of water pressure connected to the open end fittings.

S6.3.2 *Preparation.* (a) Except for the supplemental support specified in S6.3.2(d), remove all external appendages including, but not limited to, hose armor, chafing collars, mounting brackets, date band and spring guards.

(b) Measure the hose free length.

(c) Mount the hose in the whip test machine, introducing slack as specified in Table II for the size hose tested, measuring the projected length parallel to the axis of the rotating disks. The manufacturer may, at his option, adapt the fitting attachment points to permit mounting hose assemblies equipped with angled or other special

fittings in the same orientation as hose assemblies equipped with straight fittings.

(d) In the case of a brake hose assembly equipped with a permanent supplemental support integrally attached to the assembly, the assembly may be mounted using the supplemental support and associated means of simulating its attachment to the vehicle. Mount the supplemental support in the same vertical and horizontal planes as the stationary header end of the whip test fixture described in S6.3.1(b). Mount or attach the supplemental support so that it is positioned in accordance with the recommendation of the assembly manufacturer for attaching the supplemental support on a vehicle.

TABLE II—HOSE LENGTHS

Free length between end fittings, inches	Slack, inches	
	⅛ inch or 3 mm hose or less	More than ⅛ inch or 3 mm hose
8 to 15½, inclusive	1.750	.....
10 to 15½, inclusive	.....	1,000
Over 15½ to 19 inclusive	1.250	.....
Over 19 to 24, inclusive	0.750	.....

S6.3.3 *Operation*. (a) Apply 235 psi water pressure and bleed all gases from the system.

(b) Drive the movable head at 800 rpm.

S6.4 *Tensile strength test*. Utilize a tension testing machine conforming to the requirements of the methods of Verification of Testing Machines (1964 American Society for Testing and Materials, Designation E4), and provided with a recording device to give the total pull in pounds.

S6.4.1 *Preparation*. Mount the hose assembly to ensure straight, evenly distributed machine pull.

S6.4.2 *Operation*. Apply tension at a rate of 1 inch per minute travel of the moving head until separation occurs.

S6.5 *Water absorption sequence tests*.

S6.5.1 *Preparation*. Prepare three hose assemblies as follows:

(a) Remove 1⅛ inches of hose cover, if any, from the center of the hose assemblies without injury to any reinforcing material or elongation of the hose assemblies.

(b) Measure the free length of the hose assemblies.

S.6.5.2 *Immersion and sequence testing*. (a) Immerse the hose assemblies in distilled water for 70 hours.

(b) Thirty minutes after removal from water, conduct tests S6.2, S6.3, and S6.4, using a different hose for each sequence.

S6.6 *Low temperature resistance test*.

S6.6.1 *Preparation*. (a) Remove hose armor, if any, and condition a hose in a straight position in air at minus 40 °F. for 70 hours.

(b) Condition a cylinder in air at minus 40 °F for 70 hours, using a cylinder of 2½ inches diameter for test of hose less than ⅛ inch or 3 mm 3 inches for tests of ⅛ inch or 3mm hose, 3½ inches for tests of 3⁄16 and ¼ inch hose or of 4 to 6 mm hose, and 4 inches for tests of hose greater than ¼ inch or 6 mm in diameter.

S6.6.2 *Flexibility testing*. Bend the conditioned hose 180 degrees around the conditioned cylinder at a steady rate in a period of 3 to 5 seconds. Examine without magnification for cracks.

S6.7 *Brake fluid compatibility test*.

S6.7.1 *Preparation*. (a) Attach a hose assembly below a 1-pint reservoir filled with 100 ml. of SAE RM–66–04 Compatibility Fluid as shown in Figure 2. (SAE RM–66–03 Compatibility Fluid, as described in appendix A of SAE Standard J1703 NOV83, ''Motor Vehicle Brake Fluid,'' November 1983, may be used in place of SAE RM–66–04 until January 1, 1995.)

(b) Fill the hose assembly with brake fluid, seal the lower end, and place the test assembly in an oven in a vertical position.

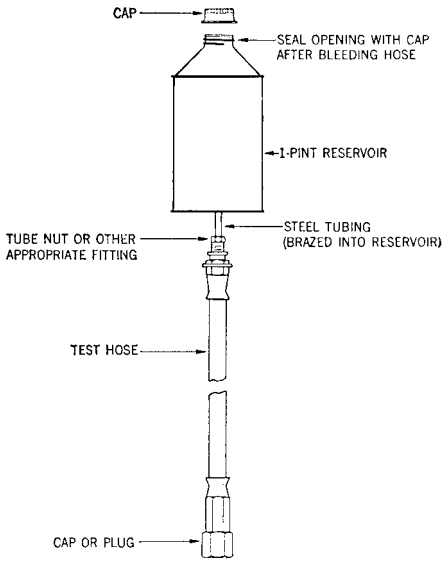

FIG. 2. BRAKE FLUID COMPATABILITY APPARATUS

S6.7.2 *Oven treatment.* (a) Condition the hose assembly at 200 °F. for 70 hours.

(b) Cool the hose assembly at room temperature for 30 minutes.

(c) Drain the brake hose assembly, immediately determine that every inside diameter of any section of the hose assembly, except for that part of an end fitting which does not contain hose, is not less than 64 percent of the nominal inside diameter of the hose, and conduct the test specified in S6.2.

S6.8 *Ozone resistance test.* Utilize a cylinder with a diameter eight times the nominal outside diameter of the brake hose excluding armor.

S6.8.1 *Preparation.* After removing any armor, bind a hydraulic brake hose 360° around the cylinder. In the case of hose shorter than the circumference of the cylinder, bend the hose so that as much of its length as possible is in contact.

S6.8.2 *Exposure to ozone.* (a) Condition the hose on the cylinder in air at room temperature for 24 hours.

(b) Immediately thereafter, condition the hose on the cylinder for 70 hours in an exposure chamber having an ambient air temperature of 104 °F. during the test and containing air mixed with ozone in the proportion of 50 parts of ozone per 100 million parts of air by volume.

(c) Examine the hose for cracks under 7-power magnification, ignoring areas immediately adjacent to or within the area covered by binding.

S6.9 *End fitting corrosion resistance test.* Utilize the apparatus described in ASTM B117–64, ''Salt Spray (Fog) Testing''.

S6.9.1 *Construction.* Construct the salt spray chamber so that:

(a) The construction material does not affect the corrosiveness of the fog.

(b) The hose assembly is supported or suspended 30° from the vertical and parallel to the principal direction of the horizontal flow of fog through the chamber.

(c) The hose assembly does not contact any metallic material or any material capable of acting as a wick.

(d) Condensation which falls from the assembly does not return to the solution reservoir for respraying.

(e) Condensation from any source does not fall on the brake hose assemblies or the solution collectors.

(f) Spray from the nozzles is not directed onto the hose assembly.

S6.9.2 *Preparation.* (a) Plug each end of the hose assembly.

(b) Mix a salt solution five parts by weight of sodium chloride to 95 parts of distilled water, using sodium chloride substantially free of nickel and copper, and containing on a dry basis not more than 0.1 percent of sodium iodide and not more than 0.3 percent total impurities. Ensure that the solution is free of suspended solids before the solution is atomized.

(c) After atomization at 95 °F. ensure that the collected solution is in the PH range of 6.5 to 7.2. Make the PH measurements at 77 °F.

(d) Maintain a compressed air supply to the nozzle or nozzles free of oil and dirt and between 10 and 25 psi.

S6.9.3 *Operation.* Subject the brake hose assembly to the salt spray continuously for 24 hours.

(a) Regulate the mixture so that each collector will collect from 1 to 2 ml. of solution per hour for each 80 square centimeters of horizontal collecting area.

(b) Maintain exposure zone temperature at 95 °F.

(c) Upon completion, remove the salt deposit from the surface of the hoses by washing gently or dipping in clean running water not warmer than 100 °F. and then drying immediately.

S7. *Requirements—Air brake hose, brake hose assemblies, and brake hose end fittings.*

S7.1 *Construction.* Each air brake hose assembly shall be equipped with permanently attached brake hose end fittings or reusable brake hose end fittings. Each air brake hose constructed of synthetic or natural elastomeric rubber intended for use with reusable end fittings shall conform to the dimensional requirements specified in Table III.

TABLE III—AIR BRAKE HOSE DIMENSIONS FOR REUSABLE ASSEMBLIES

Size, inches	Inside diameter tolerance, inches	Type I outside diameter, inches		Type II outside diameter, inches	
		Minimum	Maximum	Minimum	Maximum
3/16	+0.026 −0.000	0.472	0.510	0.500	0.539
1/4	+0.031 −0.000	0.535	0.573	0.562	0.602
5/16	+0.031 −0.000	0.598	0.636	0.656	0.695
3/8	±0.023	0.719	0.781	0.719	0.781
13/32	+0.031 −0.000	0.714	0.760	0.742	0.789
1/2	+0.039 −0.000	0.808	0.854	0.898	0.945
5/8	+0.042 −0.000	0.933	0.979	1.054	1.101
1/2 special	±.031	.844	.906	.844	.906

S7.2 *Labeling*

S7.2.1 *Hose.* Each air brake hose shall be labeled, or cut from bulk hose that is labeled, at intervals of not more than 6 inches, measured from the end of one legend to the beginning of the next, in block capital letters and numerals at least one-eighth of an inch high, with the information listed in paragraphs (a) through (e) of this section. The information need not be present on hose that is sold as part of a brake hose assembly or a motor vehicle.

(a) The symbol DOT, constituting a certification by the hose manufacturer that the hose conforms to all applicable motor vehicle safety standards.

(b) A designation that identifies the manufacturer of the hose, which shall be filed in writing with: Office of Crash Avoidance Standards, Vehicle Dynamics Division, National Highway Traffic Safety Administration, 400 Seventh Street SW., Washington, DC 20590. The designation may consist of block capital letters, numerals, or a symbol.

(c) The month, day, and year, or the month and year, of manufacture, expressed in numerals. For example, 10/1/96 means October 1, 1996.

(d) The nominal inside diameter of the hose expressed in inches or fractions of inches or in millimeters, or the nominal outside diameter of plastic tubing expressed in inches or fractions of inches or in millimeters followed by the letters OD. The abbreviation ''mm'' shall follow hose sizes that are expressed in millimeters. (Examples of inside diameter: ⅛, ½ (½SP in the case of ½ inch special air brake hose), 4 mm, 6 mm. Examples of outside diameter: ¼ OD, 12 mm OD.)

(e) The letter ''A'' shall indicate intended use in air brake systems. In the case of a hose constructed of synthetic or natural elastomeric rubber intended for use in a reusable assembly, ''AI'' or ''AII'' shall indicate Type I or Type II dimensional characteristics of the hose as described in Table III.

S7.2.2 *End fittings.* Except for an end fitting that is attached by deformation of the fitting about a hose by crimping or swaging, at least one component of each air brake hose fitting shall be etched, embossed, or stamped in block capital letters and numerals at least

one-sixteenth of an inch high with the following information:

(a) The symbol DOT, constituting a certification by the manufacturer of that component that the component conforms to all applicable motor vehicle safety standards.

(b) A designation that identifies the manufacturer of that component of the fitting, which shall be filed in writing with: Office of Crash Avoidance Standards, Vehicle Dynamics Division, National Highway Traffic Safety Administration, 400 Seventh Street SW., Washington, DC 20590. The designation may consist of block capital letters, numerals, or a symbol.

(c) The letter ''A'' shall indicate intended use in air brake systems. In the case of an end fitting intended for use in a reusable assembly with brake hose subject to Table III, ''AI'' or ''AII'' shall indicate use with Type I or Type II hose, respectively.

(d) The nominal inside diameter of the hose to which the fitting is properly attached expressed in inches or fractions of inches or in millimeters, or the outside diameter of the plastic tubing to which the fitting is properly attached expressed in inches or fractions of inches or in millimeters followed by the letters OD (See examples in S7.2.1(d)). The abbreviations ''mm'' shall follow hose sizes that are expressed in millimeters.

S7.2.3 *Assemblies*. Each air brake hose assembly made with end fittings that are attached by crimping or swaging, except those sold as part of a motor vehicle, shall be labeled by means of a band around the brake hose assembly as specified in this paragraph or, at the option of the manufacturer, by means of labeling as specified in S7.2.3.1. The band may at the manufacturer's option be attached so as to move freely along the length of the assembly, as long as it is retained by the end fittings. The band shall be etched, embossed, or stamped in block capital letters, numerals or symbols at least one-eighth of an inch high, with the following information:

(a) The symbol DOT, constituting certification by the hose assembler that the hose assembly conforms to all applicable motor vehicle safety standards.

(b) A designation that identifies the manufacturer of the hose assembly, which shall be filed in writing with: Office of Crash Avoidance Standards, Vehicle Dynamics Division, National Highway Traffic Safety Administration, 400 Seventh Street SW., Washington, DC 20590. The designation may consist of block capital letters, numerals or a symbol.

S7.2.3.1 At least one end fitting of an air brake hose assembly made with end fittings that are attached by crimping or swaging shall be etched, stamped or embossed with a designation at least one-sixteenth of an inch high that identifies the manufacturer of the hose assembly and is filed in accordance with S7.2.3(b).

S7.3 *Test requirements*. Each air brake hose assembly or appropriate part thereof shall be capable of meeting any of the requirements set forth under this heading, when tested under the conditions of S11 and the applicable procedures of S8. However, a particular hose assembly or appropriate part thereof need not meet further requirements after having met the constriction requirement (S7.3.1) and then having been subjected to any one of the requirements specified in S7.3.2 through S7.3.13.

S7.3.1 *Construction*. Except for that part of an end fitting which does not contain hose, every inside diameter of any section of an air brake hose assembly shall be not less than 66 percent of the nominal inside diameter of the brake hose.

S7.3.2 *High temperature resistance*. An air brake hose shall not show external or internal cracks, charring, or disintegration visible without magnification when straightened after being bent for 70 hours at 212 °F. over a cylinder having the radius specified in Table IV for the size of hose tested (S8.1).

S7.3.3 *Low temperature resistance*. The outer cover of an air brake hose shall not show cracks visible without magnification as a result of conditioning at minus 40 °F. for 70 hours when bent around a cylinder having the radius specified in Table IV for the size of hose tested (S8.2).

TABLE IV—AIR BRAKE HOSE DIAMETERS AND TEST CYLINDER RADII

Nominal hose diameter, in.*	1/8	3/16	1/4	5/16	3/8, 13/32	7/16, 1/2	5/8
mm.*	3	4, 5	6	8	10	12	16
Radius of test cylinder in inches	1½	2	2½	3	3½	4	4½

*These sizes are listed to provide test values for brake hoses manufactured in these sizes. They do not represent conversions.

S7.3.4 *Oil resistance.* After immersion in ASTM No. 3 oil for 70 hours at 212 °F. the volume of a specimen prepared from the inner tube and cover of an air brake hose shall not increase more than 100 percent (S8.3).

S7.3.5 *Ozone resistance.* The outer cover of an air brake hose shall not show cracks visible under 7-power magnification after exposure to ozone for 70 hours at 104 °F. (S8.4).

S7.3.6 *Length change.* An airbrake hose (other than a coiled nylon tube for use in an assembly that meets the requirements of § 393.45 of this title) shall not contract in length more than 7 percent nor elongate more than 5 percent when subjected to air pressure of 200 psi (S8.5).

S7.3.7 *Adhesion.* Except for hose reinforced by wire, an airbrake hose shall withstand a tensile force of 8 pounds per inch of length before separation of adjacent layers (S8.6).

S7.3.8 *Air pressure.* An air brake hose assembly shall contain air pressure of 200 psi for 5 minutes without loss of more than 5 psi (S8.7).

S7.3.9 *Burst strength.* An air brake hose assembly shall not rupture when exposed to hydrostatic pressure of 800 psi (S8.8).

S7.3.10 *Tensile strength.* An air brake hose assembly (other than a coiled nylon tube assembly which meets the requirements of § 393.45 of this title) designed for use between frame and axle or between a towed and a towing vehicle shall withstand, without separation of the hose from its end fittings, a pull of 250 pounds if it is ¼ inch or less or 6 mm or less in nominal internal diameter, or a pull of 325 pounds if it is larger than ¼ inch or 6 mm in nominal internal diameter. An air brake hose assembly designed for use in any other application shall withstand, without separation of the hose from its end fitting, a pull of 50 pounds if it is ¼ inch or 6 mm or less in nominal internal diameter, 150 pounds if it is ⅜ or ½ inch or 10 mm to 12 mm in nominal internal diameter, or 325 pounds if it is larger than ½ inch or 12 mm in nominal internal diameter (S8.9).

S7.3.11 *Water absorption and tensile strength.* After immersion in distilled water for 70 hours (S8.10), an air brake hose assembly (other than a coiled tube assembly which meets the requirements of § 393.45 of this title) designed for use between frame and axle or between a towed and a towing vehicle shall withstand without separation of the hose from its end fittings a pull of 250 pounds if it is ¼ inch or 6 mm or less in nominal internal diameter, or a pull of 325 pounds if it is larger than ¼ inch or 6 mm in nominal internal diameter. After immersion in distilled water for 70 hours (S8.10), an air brake hose assembly designed for use in any other application shall withstand without separation of the hose from its end fitting a pull of 50 pounds if it is ¼ inch or 6 mm or less in nominal internal diameter, 150 pounds if it is ⅜ inch or ½ inch or 10 to 12 mm in nominal internal diameter, or 325 pounds if it is larger than ½ inch or 12 mm in nominal internal diameter (S8.9).

S7.3.12 *Zinc chloride resistance.* The outer cover of an air brake hose shall not show cracks visible under 7-power magnification after immersion in a 50 percent zinc chloride aqueous solution for 200 hours (S8.11).

S7.3.13 *End fitting corrosion resistance.* After 24 hours of exposure to salt spray, air brake hose end fittings shall show no base metal corrosion on the end fitting surface except where crimping or the application of labeling information causes a displacement of the protective coating.

S8. *Test procedures—Air brake hose, brake hose assemblies, and brake hose end fittings.*

S8.1 *High temperature resistance test.* (a) Utilize a cylinder having the radius indicated in Table IV for the size of hose tested.

(b) Bind the hose around the cylinder and condition it in an air oven for 70 hours at 212 °F.

(c) Cool the hose to room temperature, remove it from the cylinder and straighten it.

(d) Without magnification, examine the hose externally and cut the hose lengthwise and examine the inner tube.

S8.2 *Low temperature resistance test.* (a) Utilize a cylinder having the radius indicated in Table IV for the size of hose tested.

(b) Condition the cylinder and the brake hose, in a straight position, in a cold box at minus 40 °F. for 70 hours.

(c) With the hose and cylinder at minus 40 °F., bend the hose 180 degrees around the cylinder at a steady rate in a period of 3 to 5 seconds.

S8.3 *Oil resistance test.* Utilize three test specimens and average the results.

S8.3.1 *Preparation.* Fashion a test specimen by cutting a rectangular block 2 inches long and not less than one-third of an inch in width, having a thickness of not more than one-sixteenth inch, from the brake hose and buff the specimen on both faces to ensure smooth surfaces.

S8.3.2 *Measurement.* (a) Weigh each specimen to the nearest milligram in air (W1) and in distilled water (W2) at room temperature. If wetting is necessary to remove air bubbles, dip the specimen in acetone and thoroughly rinse it with distilled water.

(b) Immerse each specimen in ASTM No. 3 oil for 70 hours at 212 °F. and then cool in ASTM No. 3 oil at room temperature for 30 to 60 minutes.

(c) Dip the specimen quickly in acetone and blot it lightly with filter paper.

(d) Weigh each specimen in a tared weighing bottle (W3) and in distilled water (W4) within five minutes of removal from the cooling liquid.

(e) Calculate the percentage increase in volume follows:

$$\text{Percent of increase} = [(W_3 - W_4) - (W_1 - W_2)]/(W_1 - W_2) \times 100$$

S8.4 *Ozone resistance test.* Conduct the test specified in S6.8 using air brake hose.

S8.5 *Length change test.* (a) Position a test hose in a straight, horizontal position, and apply air pressure of 10 psi thereto.

(b) Measure the hose to determine original free length.

(c) Without releasing the 10 psi, raise the air pressure to the test hose to 200 psi.

(d) Measure the hose under 200 psi to determine final free length. An elongation or contraction is an increase or decrease, respectively, in the final free length from the original free length of the hose.

S8.6 *Adhesion test.*

S8.6.1 *Apparatus.* A tension testing machine that is power-driven and that applies a constant rate of extension is used for measuring the force required to separate the layers of the test specimen. The apparatus is constructed so that:

(a) The recording head includes a freely rotating form with an outside diameter substantially the same as the inside diameter of the hose specimen to be placed on it.

(b) The freely rotating form is mounted so that its axis of rotation is in the plane of the ply being separated from the specimen and so that the applied force is perpendicular to the tangent of the specimen circumference at the line of separation.

(c) The rate of travel of the power-actuated grip is a uniform one inch per minute and the capacity of the machine is such that maximum applied tension during the test is not more than 85 percent nor less than 15 percent of the machine's rated capacity.

(d) The machine produces a chart with separation as one coordinate and applied tension as the other.

S8.6.2 *Preparation.* (a) Cut a test specimen of 1 inch or more in length from the hose to be tested and cut the layer to be tested of that test specimen longitudinally along its entire length to the level of contact with the adjacent layer.

(b) Peel the layer to be tested from the adjacent layer to create a flap large enough to permit attachment of the power-actuated clamp of the apparatus.

(c) Mount the test specimen on the freely rotating form with the separated layer attached to the power-actuated clamp.

S8.6.3 [Reserved]

S8.6.4 *Calculations.* (a) The adhesion value shall be the minimum force recorded on the chart excluding that portion of the chart which corresponds to the initial and final 20 percent portion along the displacement axis.

(b) Express the force in pounds per inch of length.

S8.7 *Air pressure test.* (a) Connect the air brake hose assembly to a source of air pressure.

(b) Apply 200 psi air pressure to the hose and seal the hose from the source of air pressure.

(c) After 5 minutes, determine the air pressure remaining in the test specimen.

S8.8 *Burst strength test.* (a) Utilize an air brake hose assembly.

(b) Fill the hose assembly with water, allowing all gases to escape. Apply water pressure at a uniform rate of increase of approximately 1,000 psi per minute until the hose ruptures.

S8.9 *Tensile strength test.* Utilize a tension testing machine conforming to the requirements of the Methods of Verification of Testing Machines (1964 American Society for Testing and Materials, Designation E4), and provided with a recording device to register total pull in pounds.

(a) Attach an air brake hose assembly to the testing machine to permit straight, even, machine-pull on the hose.

(b) Apply tension at a rate of 1 inch per minute travel of the moving head until separation occurs.

S8.10 *Water Absorption and tensile strength test.* Immerse an air brake hose assembly in distilled water at room temperature for 70 hours. Thirty minutes after removal from the water, conduct the test specified in S8.9.

S8.11 *Zinc chloride resistance test.* Immerse an air brake hose in a 50 percent zinc chloride aqueous solution at room temperature for 200 hours. Remove it from the solution and examine it under 7-power magnification for cracks.

S8.12 *End fitting corrosion resistance test.* Conduct the test specified in S6.9 using an air brake hose assembly.

S9. *Requirements—vacuum brake hose, brake hose assemblies, and brake hose end fittings.*

S9.1 *Labeling.*

S9.1.1 *Hose.* Each vacuum brake hose shall be labeled, or cut from bulk hose that is labeled, at intervals of not more than 6 inches, measured from the end of one legend to the beginning of the next, in block capital letters and numerals at least one-eighth of an inch high, with the information listed in paragraphs (a) through (e) of this section. The information need not be present on hose that is sold as part of a brake hose assembly or a motor vehicle. (a) The symbol DOT, constituting a certification by the hose manufacturer that the hose conforms to all applicable motor vehicle safety standards.

(b) A designation that identifies the manufacturer of the hose, which shall be filed in writing with: Office of Crash Avoidance Standards, Vehicle Dynamics Division, National Highway Traffic Safety Administration, 400 Seventh Street, SW., Washington, DC 20590. The designation may consist of block capital letters, numerals or a symbol.

(c) The month, day, and year, or the month and year, of manufacture, expressed in numerals. For example, 10/1/96 means October 1, 1996.

(d) The nominal inside diameter of the hose expressed in inches or fractions of inches or in millimeters, or the nominal outside diameter of plastic tubing expressed in inches or fractions of inches or in millimeters followed by the letters OD. The abbreviation ''mm'' shall follow hose sizes that are expressed in millimeters. (Example of inside diameter: 7⁄32, ¼, 4 mm. Example of outside diameter: ¼ OD, 12 mm OD.)

(e) The letters ''VL'' or ''VH'' shall indicate that the component is a light-duty vacuum brake hose or heavy-duty vacuum brake hose, respectively.

S9.1.2 *End fittings.* Except for an end fitting that is attached by heat striking or by interference fit with plastic vacuum hose or that is attached by deformation of the fitting about a hose by crimping or swaging, at least one component of each vacuum brake hose fitting shall be etched, embossed, or stamped in block capital letters and numerals at least one-sixteenth of an inch high with the following information:

(a) The symbol DOT, constituting a certification by the manufacturer of that component that the component

conforms to all applicable motor vehicle safety standards.

(b) A designation that identifies the manufacturer of that component of the fitting, which shall be filed in writing with: Office of Crash Avoidance Standards, Vehicle Dynamics Division, National Highway Traffic Safety Administration, 400 Seventh Street, SW., Washington, DC 20590. The designation may consist of block capital letters, numerals or a symbol.

(c) The letters ''VL'' or ''VH'' shall indicate that the end fitting is intended for use in a light-duty or heavy-duty vacuum brake system, respectively.

(d) The nominal inside diameter of the hose to which the fitting is properly attached expressed in inches or fractions of inches or in millimeters, or the outside diameter of the plastic tubing to which the fitting is properly attached expressed in inches or fraction of inches or in millimeters followed by the letter OD (See examples in S9.1.1(d)). The abbreviation ''mm'' shall follow hose sizes that are expressed in millimeters.

S9.1.3 *Assemblies*. Each vacuum brake hose assembly made with end fittings that are attached by crimping or swaging and each plastic tube assembly made with end fittings that are attached by heat shrinking or dimensional interference fit, except those sold as part of a motor vehicle, shall be labeled by means of a band around the brake hose assembly as specified in this paragraph or, at the option of the manufacturer, by means of labeling as specified in S9.1.3.1. The band may at the manufacturer's option be attached so as to move freely along the length of the assembly, as long as it is retained by the end fittings. The band shall be etched, embossed, or stamped in block capital letters, numerals or symbols at least one-eighth of an inch high, with the following information:

(a) The symbol DOT, constituting certification by the hose assembler that the hose assembly conforms to all applicable motor vehicle safety standards.

(b) A designation that identifies the manufacturer of the hose assembly, which shall be filed in writing with: Office of Crash Avoidance Standards, Vehicle Dynamics Division, National Highway Traffic Safety Administration, 400 Seventh Street SW., Washington, DC 20590. The designation may consist of block capital letters, numerals or a symbol.

S9.1.3.1 At least one end fitting of a vacuum brake hose assembly made with end fittings that are attached by crimping or swaging, or of a plastic tubing assembly made with end fittings that are attached by heat shrinking or dimensional interference fit shall be etched, stamped or embossed with a designation at least one-sixteenth of an inch high that identifies the manufacturer of the hose assembly and is filed in accordance with S9.1.3(b).

S9.2 *Test requirements*. Each vacuum brake hose assembly or appropriate part thereof shall be capable of meeting any of the requirements set forth under this heading, when tested under the conditions of S11. and the applicable procedures of S10. However, a particular hose assembly or appropriate part thereof need not meet further requirements after having met the construction requirement (S9.2.1) and then having been subjected to any one of the requirements specified in S9.2.2 through S9.2.11.

S9.2.1 *Constriction*. Except for that part of an end fitting which does not contain hose, every inside diameter of any section of a vacuum brake hose assembly shall be not less than 75 percent of the nominal inside diameter of the hose if for heavy duty, or 70 percent of the nominal inside diameter of the hose if for light duty.

S9.2.2 *High temperature resistance*. A vacuum brake hose shall not show external or internal cracks, charring, or disintegration visible without magnification when straightened after being bent for 70 hours at 212 °F. over a cylinder having the radius specified in Table V for the size of hose tested (S10.1).

S9.2.3 *Low temperature resistance*. A vacuum brake hose shall not show cracks visible without magnification after conditioning at minus 40 °F. for 70 hours when bent around a cylinder having the radius specified in Table V for the size hose tested (S10.2).

S9.2.4 *Ozone resistance*. A vacuum brake hose shall not show cracks visible under 7-power magnification after exposure to ozone for 70 hours (S10.3).

S9.2.5 *Burst strength*. A vacuum brake hose shall not rupture under hydrostatic pressure of 350 psi (S10.4).

S9.2.6 *Vacuum*. The collapse of the outside diameter of a vacuum brake hose under internal vacuum of 26 inches of Hg. for five minutes shall not exceed one-sixteenth of an inch (S10.5).

S9.2.7 *Bend*. The collapse of the outside diameter of a vacuum brake hose at the middle point of the test length when bent until the ends touch shall not exceed the values given in Table V for the size of hose tested (S10.6).

TABLE V—VACUUM BRAKE HOSE TEST REQUIREMENTS

Hose inside diameter*		High temperature resistance		Low temperature resistance		Bend		Deformation—collapsed inside diameter (dimension D), inches
Inches	Millimeters	Hose length, inches	Radius of cylinder, inches	Hose length, inches	Radius of cylinder, inches	Hose length, inches	Maximum collapse of outside diameter, inches	
7/32	5	8	1½	17½	3	7	11/64	3/64
¼	6	9	1½	17½	3	8	3/32	1/16
9/32	.....	9	1¾	19	3½	9	12/64	4/64
11/32	8	9	1¾	19	3½	11	13/64	5/64
⅜	10	10	1¾	19	3½	12	5/32	3/32
7/16	.....	11	2	20½	4	14	17/64	5/64
15/32	.....	11	2	20½	4	14	17/64	5/64
½	12	11	2	20½	4	16	7/32	⅛
⅝	16	12	2¼	22	4½	22	7/32	5/32
¾	.....	14	2½	24	5	28	7/32	3/16
1	.....	16	3¼	28½	6½	36	9/32	¼

*These sizes are listed to provide test values for brake hoses manufactured in these sizes. They do not represent conversions.

S9.2.8 *Swell*. Following exposure to Reference Fuel A, every inside diameter of any section of a vacuum brake hose shall not be less than 75 percent of the nominal inside of the hose if for heavy duty, or 70 percent of the nominal inside diameter of the hose if for light duty. The vacuum brake hose shall show no leakage and there shall be no separation of the inner tube from the fabric reinforcement of the hose in a vacuum test of 26 inches of Hg for 10 minutes (S10.7).

S9.2.9 *Adhesion*. Except for hose reinforced by wire, a vacuum brake hose shall withstand a force of 8 pounds per inch of length before separation of adjacent layers (S10.8).

S9.2.10 *Deformation*. A vacuum brake hose shall return to 90 percent of its original outside diameter within 60 seconds after five applications of force as specified in S10.9, except that a wire-reinforced hose need only return to 85 percent of its original outside diameter. In the case of heavy-duty hose the first application of force shall not exceed a peak value of 70 pounds, and the fifth application of force shall reach a peak value of at least 40 pounds. In the case of lightduty hose the first application of force shall not exceed a peak value of 50 pounds, and the fifth application of force shall reach a peak value of at least 20 pounds (S10.9).

S9.2.11 *End fitting corrosion resistance*. After 24 hours of exposure to salt spray, vacuum brake hose end fittings shall show no base metal corrosion of the end fitting surface except where crimping or the application of labeling information has caused displacement of the protective coating.

S10. *Test procedures—Vacuum brake hose, brake hose assemblies, and brake hose end fittings*.

S10.1 *High temperature resistance test*. Conduct the test specified in S8.1 using vacuum brake hose with the cylinder radius specified in Table V for the size of hose tested.

S10.2 *Low temperature resistance test*. Conduct the test specified in S8.2 using vacuum brake hose with the cylinder radius specified in Table V for the size of hose tested.

S10.3 *Ozone resistance test*. Conduct the test specified in S6.8 using vacuum brake hose.

S10.4 *Burst strength test.* Conduct the test specified in S8.8 using vacuum brake hose.

S10.5 *Vacuum test.* Utilize a 12-inch vacuum brake hose assembly sealed at one end. (a) Measure the hose outside diameter.

(b) Attach the hose to a source of vacuum and subject it to a vacuum of 26 inches of Hg for 5 minutes.

(c) Measure the hose to determine the minimum outside diameter while the hose is still subject to vacuum.

S10.6 *Bend test.* (a) Bend a vacuum brake hose, of the length prescribed in Table V, in the direction of its normal curvature until the ends just touch as shown in Figure 3.

(b) Measure the outside diameter of the specimen at point A before and after bending.

(c) The difference between the two measurements is the collapse of the hose outside diameter on bending.

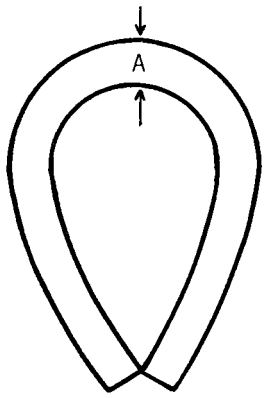

FIG. 3—BEND TEST OF VACUUM BRAKE HOSE.

S10.7 *Swell test.* (a) Fill a specimen of vacuum brake hose 12 inches long with Reference Fuel A as described in the Method of Test for Change in Properties of Elastomeric Vulcanizers Resulting From Immersion in Liquids (1964 American Society for Testing and Materials, designation D471).

(b) Maintain reference fuel in the hose under atmospheric pressure at room temperature for 48 hours.

(c) Remove fuel and determine that every inside diameter of any section of the brake hose is not less than 75 percent of the nominal inside diameter of the hose for heavy-duty hose and 70 percent of the nominal inside diameter of the hose for light-duty hose.

(d) Subject the hose specimen to a vacuum of 26 inches of Hg for 10 minutes.

S10.8 *Adhesion test.* Conduct the test specified in S8.6 using vacuum brake hose.

S10.9 *Deformation test.* Table VI specifies the test specimen dimensions.

S10.9.1 *Apparatus.* Utilize a compression device, equipped to measure force of at least 100 pounds, and feeler gages of sufficient length to be passed completely through the test specimen.

S10.9.2 *Operation.* (a) Position the test specimen longitudinally in the compression device with the fabric laps not in the line of the applied pressure.

TABLE VI—DIMENSIONS OF TEST SPECIMEN AND FEELER GAGE FOR DEFORMATION TEST

Hose inside diameter*		Specimen dimensions (see fig. 4)		Feeler gage dimensions	
In.	Mm.	Depth (inch)	Length (inch)	Width (inch)	Thickness (inch)
7/32	5	3/64	1	1/8	3/64
1/4	6	1/16	1	1/8	1/16
9/32	.....	1/16	1	1/8	1/16
11/32	8	5/64	1	3/16	5/64
3/8	10	3/32	1	3/16	3/32
7/16	.....	5/64	1	1/4	5/64
15/32	.....	5/64	1	1/4	5/64
1/2	12	1/8	1	1/4	1/8
5/8	16	5/32	1	1/4	5/32
3/4	.....	3/16	1	1/4	3/16
1	.....	1/4	1	1/4	1/4

*These sizes are listed to provide test values for brake hoses manufactured in these sizes. They do not represent conversions.

(b) Apply gradually increasing force to the test specimen to compress its inside diameter to that specified in Table VI (dimension D of figure 4) for the size of hose tested.

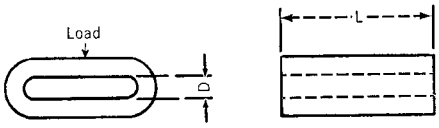

FIG. 4. DEFORMED SPECIMEN OF VACUUM BRAKE HOSE

(c) After 5 seconds release the force and record the peak load applied.

(d) Repeat the procedure four times permitting a 10-second recovery period between load applications.

S10.10 *End fitting corrosion resistance test.* Conduct the test specified in S6.9 using a vacuum brake hose assembly.

S11. *Test conditions.* Each hose assembly or appropriate part thereof shall be able to meet the requirements of S5., S7., and S9. under the following conditions.

S11.1 The temperature of the testing room is 75 °F.

S11.2 Except for S6.6, S8.2, and S10.2, the test samples are stabilized at test room temperature prior to testing.

S11.3 The brake hoses and brake hose assemblies are at least 24 hours old, and unused.

[38 FR 31303, Nov. 13, 1973]

EDITORIAL NOTE: For FEDERAL REGISTER citations affecting § 571.106, see the List of CFR Sections Affected, which appears in the Finding Aids section of the printed volume and on GPO Access.

§ 571.107 [Reserved]

§ 571.108 Standard No. 108; Lamps, reflective devices, and associated equipment.

S1. *Scope.* This standard specifies requirements for original and replacement lamps, reflective devices, and associated equipment.

S2. *Purpose.* The purpose of this standard is to reduce traffic accidents and deaths and injuries resulting from traffic accidents, by providing adequate illumination of the roadway, and by enhancing the conspicuity of motor vehicles on the public roads so that their presence is perceived and their signals understood, both in daylight and in darkness or other conditions of reduced visibility.

S3. *Application.* This standard applies to:

(a) Passenger cars, multipurpose passenger vehicles, trucks, buses, trailers (except pole trailers and trailer converter dollies), and motorcycles;

(b) Retroreflective sheeting and reflex reflectors manufactured to conform to S5.7 of this standard; and

(c) Lamps, reflective devices, and associated equipment for replacement of like equipment on vehicles to which this standard applies.

S4. *Definitions.*

Aiming Reference Plane means a plane which is perpendicular to the longitudinal axis of the vehicle and tangent to the forwardmost aiming pad on the headlamp.

Beam contributor means an indivisible optical assembly including a lens, reflector, and light source, that is part of an integral beam headlighting system and contributes only a portion of a headlamp beam.

Cargo lamp is a lamp that is mounted on a multipurpose passenger vehicle, truck, or bus for the purpose of providing illumination to load or unload cargo.

Cutoff means a generally horizontal, visual/optical aiming cue in the lower beam that marks a separation between areas of higher and lower luminance.

Direct reading indicator means a device that is mounted in its entirety on a headlamp or headlamp aiming or headlamp mounting equipment, is part of a VHAD, and provides information about headlamp aim in an analog or digital format.

Effective projected luminous lens area means that area of the projection on a plane perpendicular to the lamp axis of that portion of the light-emitting surface that directs light to the photometric test pattern, and does not include mounting hole bosses, reflex reflector area, beads or rims that may glow or produce small areas of increased intensity as a result of uncontrolled light from small areas (½ deg. radius around the test point).

Filament means that part of the light source or light emitting element(s), such as a resistive element, the excited portion of a specific mixture of gases under pressure, or any part of other energy conversion sources, that generates radiant energy which can be seen.

Flash means a cycle of activation and deactivation of a lamp by automatic means continuing until stopped either automatically or manually.

Fully opened means the position of the headlamp concealment device in which the headlamp is in the design open operating position.

Headlamp concealment device means a device, with its operating system and components, that provides concealment of the headlamp when it is not in use, including a movable headlamp cover and a headlamp that displaces for concealment purposes.

Headlamp test fixture means a device designed to support a headlamp or headlamp assembly in the test position specified in the laboratory tests and whose mounting hardware and components are those necessary to operate the headlamp as installed in a motor vehicle.

Integral beam headlamp means a headlamp (other than a standardized sealed beam headlamp designed to conform to paragraph S7.3 or a replaceable bulb headlamp designed to conform to paragraph S7.5) comprising an integral and indivisible optical assembly including lens, reflector, and light source, except that a headlamp conforming to paragraph S7.8.5.2 or paragraph S7.8.5.3 may have a lens designed to be replaceable.

Multiple compartment lamp means a device which gives its indication by two or more separately lighted areas which are joined by one or more common parts, such as a housing or lens.

Multiple lamp arrangement means an array of two or more separate lamps on each side of the vehicle which operate together to give a signal.

Remote reading indicator means a device that is not mounted in its entirety on a headlamp or headlamp aiming or headlamp mounting equipment, but otherwise meets the definition of a direct reading indicator.

Replaceable bulb headlamp means a headlamp comprising a bonded lens and reflector assembly and one or two replaceable headlamp light sources, except that a headlamp conforming to paragraph S7.8.5.2 or paragraph S7.8.5.3 may have a lens designed to be replaceable.

Replaceable light source means an assembly of a capsule, base, and terminals that is designed to conform to the requirements of Appendix A or Appendix B of part 564 *Replaceable Light Source Information* of this Chapter.

Vehicle headlamp aiming device or VHAD means motor vehicle equipment, installed either on a vehicle or headlamp, which is used for determining the horizontal or vertical aim, or both the vertical and horizontal aim of the headlamp.

Visually/optically aimable headlamp means a headlamp which is designed to be visually/optically aimable in accordance with the requirements of paragraph S7.8.5.3 of this standard.

S5. *Requirements.*

S5.1 *Required motor vehicle lighting equipment.*

S5.1.1 Except as provided in succeeding paragraphs of this S5.1.1, each vehicle shall be equipped with at least the number of lamps, reflective devices, and associated equipment specified in Tables I and III and S7, as applicable. Required equipment shall be designed to conform to the SAE Standards or Recommended Practices referenced in those tables. Table I applies to multipurpose passenger vehicles, trucks, trailers, and buses, 80 or more inches in overall width. Table III applies to passenger cars and motorcycles and to multipurpose passenger vehicles, trucks, trailers, and buses, less than 80 inches in overall width.

S5.1.1.1 A truck tractor need not be equipped with turn signal lamps mounted on the rear if the turn signal lamps at or near the front are so constructed (double-faced) and so located that they meet the requirements for double-faced turn signals specified in SAE Standard J588e, *Turn Signal Lamps,* September 1970.

S5.1.1.2 A truck tractor need not be equipped with any rear side marker devices, rear clearance lamps, and rear identification lamps.

S5.1.1.3 Intermediate side marker devices are not required on vehicles less than 30 feet in overall length.

S5.1.1.4 Reflective material conforming to Federal Specification L–S–300, *Sheeting and Tape, Reflective; Nonexposed Lens, Adhesive Backing,* September 7, 1965, may be used for side reflex reflectors if this material as used on the vehicle, meets the performance standards in either Table I or Table IA of SAE Standard J594f, *Reflex Reflectors,* January 1977.

S5.1.1.5 The turn signal operating unit on each passenger car, and multipurpose passenger vehicle, truck, and bus less than 80 inches in overall width shall be self-canceling by steering wheel rotation and capable of cancellation by a manually operated control.

S5.1.1.6 Instead of the photometric values specified in Table 1 of SAE Standards J222 December 1970, or J585e September 1977, a parking lamp or tail

lamp, respectively, shall meet the minimum percentage specified in Figure 1a of the corresponding minimum allowable value specified in Figure 1b. The maximum candlepower output of a parking lamp shall not exceed that prescribed in Figure 1b, or of a taillamp, that prescribed in Figure 1b at H or above. If the sum of the percentages of the minimum candlepower measured at the test points is not less than that specified for each group listed in Figure 1c, a parking lamp or taillamp is not required to meet the minimum photometric value at each test point specified in SAE Standards J222 or J585e respectively.

S5.1.1.7 A motorcycle turn signal lamp need meet only one-half of the minimum photometric values specified in Table 1 and Table 3 of SAE J588 NOV84 *Turn Signal Lamps*.

S5.1.1.8 For each motor vehicle less than 30 feet in overall length, the photometric minimum candlepower requirements for side marker lamps specified in SAE Standard J592e *Clearance, Side Marker, and Identification Lamps*, July 1972, may be met for all inboard test points at a distance of 15 feet from the vehicle and on a vertical plane that is perpendicular to the longitudinal axis of the vehicle and located midway between the front and rear side marker lamps.

S5.1.1.9 A boat trailer whose overall width is 80 inches or more need not be equipped with both front and rear clearance lamps provided an amber (to front) and red (to rear) clearance lamp is located at or near the midpoint on each side so as to indicate its extreme width.

S5.1.1.10 Multiple license plate lamps and backup lamps may be used to fufill the requirements of the SAE Standards applicable to such lamps referenced in Tables I and III.

S5.1.1.11 A stop lamp that is not optically combined, as defined by SAE Information Report J387 *Terminology—Motor Vehicle Lighting* NOV87, with a turn signal lamp, shall remain activated when the turn signal lamp is flashing.

S5.1.1.12 On a motor vehicle, except a passenger car, whose overall width is 80 inches or more, measurements of the functional lighted lens area, and of the photometrics, of a multiple compartment stop lamp, and a multiple compartment turn signal lamp, shall be made for the entire lamp and not for the individual compartments.

S5.1.1.13 Each passenger car, and each multipurpose passenger vehicle, truck, and bus of less than 80 inches overall width, shall be equipped with a turn signal operating unit designed to complete a durability test of 100,000 cycles.

S5.1.1.14 A trailer that is less than 30 inches in overall width may be equipped with only one taillamp, stop lamp, and rear reflex reflector, which shall be located at or near its vertical centerline.

S5.1.1.15 A trailer that is less than 6 feet in overall length, including the trailer tongue, need not be equipped with front side marker lamps and front side reflex reflectors.

S5.1.1.16 A lamp designed to use a type of bulb that has not been assigned a mean spherical candlepower rating by its manufacturer and is not listed in SAE Standard J573d, *Lamp Bulbs and Sealed Units*, December 1968, shall meet the applicable requirements of this standard when used with any bulb of the type specified by the lamp manufacturer, operated at the bulb's design voltage. A lamp that contains a sealed-in bulb shall meet these requirements with the bulb operated at the bulb's design voltage.

S5.1.1.17 Except for a lamp having a sealed-in bulb, a lamp shall meet the applicable requirements of this standard when tested with a bulb whose filament is positioned within ±.010 inch of the nominal design position specified in SAE Standard J573d, *Lamp Bulbs and Sealed Units*, December 1968, or specified by the bulb manufacturer.

S5.1.1.18 A backup lamp is not required to meet the minimum photometric values at each test point specified in Table I of SAE Standard J593c, *Backup Lamps*, February 1968, if the sum of the candlepower measured at the test points within each group listed in Figure 2 is not less than the group totals specified in that figure.

S5.1.1.19 Each variable load turn signal flasher shall comply with voltage drop and durability requirements of

SAE Standard J590b, *Turn Signal Flashers,* October 1965 with the maximum design load connected, and shall comply with starting time, flash rate, and percent current ''on'' time requirements of J590b both with the minimum and with the maximum design load connected.

S5.1.1.20 The lowest voltage drop for turn signal flashers and hazard warning signal flashers measured between the input and load terminals shall not exceed 0.8 volt.

S5.1.1.21 A motor-driven cycle whose speed attainable in 1 mile is 30 mph or less need not be equipped with turn signal lamps.

S5.1.1.22 A motor-driven cycle whose speed attainable in 1 mile is 30 mph or less may be equipped with a stop lamp whose effective projected luminous lens area is not less than 3½ square inches and whose photometric output for the groups of test points specified in Figure 1 is at least one-half of the minimum values set forth in that figure.

S5.1.1.23-24 [Reserved]

S5.1.1.25 Each turn signal lamp on a motorcycle manufactured on and after January 1, 1973, shall have an effective projected luminous area of not less than 3½ square inches.

S5.1.1.26 On a motor vehicle whose overall width is less than 80 inches:

(a) The functional lighted lens area of a single compartment stop lamp, and a single compartment rear turn signal lamp, shall be not less than 50 square centimeters.

(b) If a multiple compartment lamp or multiple lamps are used to meet the photometric requirements for stop lamps and rear turn signal lamps, the functional lighted lens area of each compartment or lamp shall be at least 22 square centimeters, provided the combined area is at least 50 square centimeters.

S5.1.1.27 (a) Except as provided in paragraph (b) of this section, each passenger car manufactured on or after September 1, 1985, and each multipurpose passenger vehicle, truck, and bus, whose overall width is less than 80 inches, whose GVWR is 10,000 pounds or less, manufactured on or after September 1, 1993, shall be equipped with a high-mounted stop lamp which:

(1) Shall have an effective projected luminous area not less than 4½ square inches.

(2) Shall have a signal visible to the rear through a horizontal angle from 45 degrees to the left to 45 degrees to the right of the longitudinal axis of the vehicle.

(3) Shall have the minimum photometric values in the amount and location listed in Figure 10.

(4) Need not meet the requirements of paragraphs 3.1.6 Moisture Test, 3.1.7 Dust Test, and 3.1.8 Corrosion Test of SAE Recommended Practice J186a, Supplemental High-Mounted Stop and Rear Turn Signal Lamps, September 1977, if it is mounted inside the vehicle.

(5) Shall provide access for convenient replacement of the bulb without the use of special tools.

(b) Each multipurpose passenger vehicle, truck and bus whose overall width is less than 80 inches, whose GVWR is 10,000 pounds or less, whose vertical centerline, when the vehicle is viewed from the rear, is not located on a fixed body panel but separates one or two movable body sections, such as doors, which lacks sufficient space to install a single high-mounted stop lamp on the centerline above such body sections, and which is manufactured on or after September 1, 1993, shall have two high-mounted stop lamps which:

(1) Are identical in size and shape and have an effective projected luminous area not less than 2¼ inches each.

(2) Together have a signal to the rear visible as specified in paragraph (a)(2) of this S5.1.1.27.

(3) Together have the minimum photometric values specified in paragraph (a)(3) of this S5.1.1.27.

(4) Shall provide access for convenient replacement of the bulbs without special tools.

S5.1.1.28 A multipurpose passenger vehicle, truck, or bus, whose overall width is less than 80 inches, and whose GVWR is 10,000 pounds or less, that is manufactured between September 1, 1992 and September 1, 1993, may be equipped with a high-mounted stop lamp or, in the case of vehicles subject to S5.1.1.27(b), two high-mounted stop lamps, that conform to S5.1.1.27 and S5.3.1.8.

S5.1.1.29 A trailer equipped with a conspicuity treatment in conformance with paragraph S5.7 of this standard need not be equipped with the reflex reflectors required by Table I of this standard if the conspicuity material is placed at the locations of the reflex reflectors required by Table I.

S5.1.2 Plastic materials used for optical parts such as lenses and reflectors shall conform to SAE Recommended Practice J576 JUL91, except that:

(a) Plastic lenses (other than those incorporating reflex reflectors) used for inner lenses or those covered by another material and not exposed directly to sunlight shall meet the requirements of paragraphs 3.3 and 4.2 of SAE J576 JUL91 when covered by the outer lens or other material;

(b) After the outdoor exposure test, the haze and loss of surface luster of plastic materials (other than those incorporating reflex reflectors) used for outer lenses shall not be greater than 30 percent haze as measured by ASTM D 1003–92, *Haze and Luminous Transmittance of Transparent Plastic;*

(c) After the outdoor exposure test, plastic materials used for reflex reflectors and for lenses used in front of reflex reflectors shall not show surface deterioration, crazing, dimensional changes, color bleeding, delamination, loss of surface luster, or haze that exceeds 7 percent as measured under ASTM D 1003–92.

(d) The thickness of the test specimens specified in paragraph 3.2.2 of SAE J576 JUL91 may vary by as much as ±0.25 mm.

(e) After exposure to the heat test as specified in subparagraph (f) of this paragraph, and after cooling to room ambient temperature, a test specimen shall show no change in shape and general appearance discernable to the naked eye when compared with an unexposed specimen. The trichromatic coefficients of the samples shall conform to the requirements of SAE J578c, *Color Specification for Electric Signal Lighting Devices,* February 1977.

(f) Two samples of each thickness of each plastic material are used in the heat test. Each sample is supported at the bottom, with at least 51 mm. of the sample above the support, in the vertical position in such a manner that, on each side, the minimum uninterrupted area of exposed surface is not less than 3225 sq. mm. The samples are placed for two hours in a circulating air oven at 79 ± 3 degrees C.

(g) All outdoor exposure tests shall be 3 years in duration, whether the material is exposed or protected. Accelerated weathering procedures are not permitted.

S5.1.3 No additional lamp, reflective device or other motor vehicle equipment shall be installed that impairs the effectiveness of lighting equipment required by this standard.

S5.1.4 Each school bus shall be equipped with a system of either:

(a) Four red signal lamps designed to conform to SAE Standard J887, *School Bus Red Signal Lamps*, July 1964, and installed in accordance with that standard; or

(b) Four red signal lamps designed to conform to SAE Standard J887, *School Bus Red Signal Lamps*, July 1964, and four amber signal lamps designed to conform to that standard, except for their color, and except that their candlepower shall be at least 2½ times that specified for red signal lamps. Both red and amber lamps shall be installed in accordance with SAE Standard J887, except that:

(i) Each amber signal lamp shall be located near each red signal lamp, at the same level, but closer to the vertical centerline of the bus; and

(ii) The system shall be wired so that the amber signal lamps are activated only by manual or foot operation, and if activated, are automatically deactivated and the red signal lamps automatically activated when the bus entrance door is opened.

S5.1.5 The color in all lamps, reflective devices, and associated equipment to which this standard applies shall comply with SAE Standard J578c, *Color Specification for Electric Signal Lighting Devices*, February 1977.

S5.2 *Other requirements.*

S5.2.1 The words ''it is recommended that,'' ''recommendations,'' or ''should be'' appearing in any SAE Standard or Recommended Practice referenced or subreferenced in this standard shall be read as setting forth mandatory requirements, except that the aiming pads on the lens face and

the black area surrounding the signal lamp recommended in SAE Standard J887, *School Bus Red Signal Lamps*, July 1964, are not required.

S5.2.2 The words ''Type 1 (5¾″),'' ''Type 2 (5¾″),'' ''Type 2 (7″),'' ''Type 1A,'' ''Type 2A,'' and ''Type 2B'' appearing in any SAE Standard or Recommended Practice referenced or subreferenced in this standard shall also be read as setting forth requirements respectively for the following types of headlamps: 1C1, 2C1, 2D1, 1A1, 2A1, and 2B1.

S5.3 *Location of required equipment.*

S5.3.1 Except as provided in succeeding paragraphs of S5.3.1, and paragraphs S5.7 and S7, each lamp, reflective device, and item of associated equipment shall be securely mounted on a rigid part of the vehicle other than glazing that is not designed to be removed except for repair, in accordance with the requirements of Table I and Table III, as applicable, and in the location specified in Table II (multipurpose passenger vehicles, trucks, trailers, and buses 80 or more inches in overall width) or Table IV (all passenger cars, and motorcycles, and multipurpose passenger vehicles, truck, trailers and buses less than 80 inches in overall width), as applicable.

S5.3.1.1 Except as provided in S5.3.1.1.1, each lamp and reflective device shall be located so that it meets the visibility requirements specified in any applicable SAE Standard or Recommended Practice. In addition, no part of the vehicle shall prevent a parking lamp, taillamp, stop lamp, turn signal lamp, or backup lamp from meeting its photometric output at any applicable group of test points specified in Figures 1c and 2, or prevent any other lamp from meeting the photometric output at any test point specified in any applicable SAE Standard or Recommended Practice. However, if motor vehicle equipment (e.g., mirrors, snow plows, wrecker booms, backhoes, and winches) prevents compliance with this paragraph by any required lamp or reflective devices, an auxiliary lamp or device meeting the requirements of this paragraph shall be provided.

S5.3.1.1.1 Clearance lamps may be located at a location other than on the front and rear if necessary to indicate the overall width of a vehicle, or for protection from damage during normal operation of the vehicle, and at such a location they need not meet the photometric output at any test point that is 45 degrees inboard.

S5.3.1.2 On a truck tractor, the red rear reflex reflectors may be mounted on the back of the cab, at a minimum height not less than 4 inches above the height of the rear tires.

S5.3.1.3 On a trailer, the amber front side reflex reflectors and amber front side marker lamps may be located as far forward as practicable exclusive of the trailer tongue.

S5.3.1.4 When the rear identification lamps are mounted at the extreme height of a vehicle, rear clearance lamps need not meet the requirement of Table II that they be located as close as practicable to the top of the vehicle.

S5.3.1.5 The center of the lens referred to in SAE Standard J593c, *Backup Lamps*, February 1968, is the optical center.

S5.3.1.6 On a truck tractor, clearance lamps mounted on the cab may be located to indicate the width of the cab, rather than the overall width of the vehicle.

S5.3.1.7 On a motor vehicle on which the front turn signal lamp is less than 100 mm from the lighted edge of a lower beam headlamp, as measured from the optical center of the turn signal lamp, the multiplier applied to obtain the required minimum luminous intensities shall be 2.5.

S5.3.1.8 (a) Each high-mounted stop lamp installed in or on a vehicle subject to S5.1.1.27(a) shall be located as follows:

(1) With its center at any place on the vertical centerline of the vehicle, including the glazing, as the vehicle is viewed from the rear.

(2) If the lamp is mounted below the rear window, no portion of the lens shall be lower than 6 inches below the rear window on convertibles, or 3 inches on other passenger cars.

(3) If the lamp is mounted inside the vehicle, means shall be provided to minimize reflections from the light of the lamp upon the rear window glazing that might be visible to the driver when viewed directly, or indirectly in the rearview mirror.

(b) The high-mounted stop lamps installed in or on a vehicle subject to S5.1.1.27(b) shall be located at the same height, with one vertical edge of each lamp on the vertical edge of the body section nearest the vertical centerline.

S5.4 *Equipment combinations.* Two or more lamps, reflective devices, or items of associated equipment may be combined if the requirements for each lamp, reflective device, and item of associated equipment are met, with the following exceptions:

(a) No high-mounted stop lamp shall be combined with any other lamp or reflective device, other than with a cargo lamp.

(b) No high-mounted stop lamp shall be combined optically, as defined by SAE Information Report J387 *Terminology—Motor Vehicle Lighting* NOV87, with any cargo lamp.

(c) No clearance lamp shall be combined optically, as defined by SAE Information Report J387 *Terminology—Motor Vehicle Lighting* NOV87, with any taillamp.

S5.5 *Special wiring requirements.*

S.5.5.1 Each vehicle shall have a means of switching between lower and upper beams that conforms to SAE Recommended Practice J564a *Headlamp Beam Switching*, April 1964 or to SAE Recommended Practice J565b, *Semi-Automatic Headlamp Beam Switching Devices*, February 1969. Except as provided in S5.5.8, the lower and upper beams shall not be energized simultaneously except momentarily for temporary signalling purposes or during switching between beams.

S5.5.2 Each vehicle shall have a means for indicating to the driver when the upper beams of the headlamps are on that conforms to SAE Recommended Practice J564a, April 1964, except that the signal color need not be red.

S5.5.3 The taillamps on each vehicle shall be activated when the headlamps are activated in a steady-burning state, but need not be activated if the headlamps are activated at less than full intensity as permitted by paragraph S5.5.11(a).

S5.5.4 The stop lamps on each vehicle shall be activated upon application of the service brakes. The high-mounted stop lamp on each vehicle shall be activated only upon application of the service brakes.

S5.5.5 The vehicular hazard warning signal operating unit on each vehicle shall operate independently of the ignition or equivalent switch, and when activated, shall cause to flash simultaneously sufficient turn signal lamps to meet, as a minimum, the turn signal lamp photometric requirements of this standard.

S5.5.6 Each vehicle equipped with a turn signal operating unit shall also have an illuminated pilot indicator. Failure of one or more turn signal lamps to operate shall be indicated in accordance with SAE Standard J588e, *Turn Signal Lamps*, September 1970, except when a variable-load turn signal flasher is used on a truck, bus, or multipurpose passenger vehicle 80 or more inches in overall width, on a truck that is capable of accommodating a slide-in camper, or on any vehicle equipped to tow trailers.

S5.5.7 On each passenger car and motorcycle, and on each multipurpose passenger vehicle, truck, and bus of less than 80 inches overall width:

(a) When the parking lamps are activated, the taillamps, license plate lamps, and side marker lamps shall also be activated; and

(b) When the headlamps are activated in a steady-burning state, the tail lamps, parking lamps, license plate lamps and side marker lamps shall also be activated.

S5.5.8 On a motor vehicle equipped with a headlighting system designed to conform to the photometric requirements of Figure 15–1 or Figure 15–2, the lamps marked ''L'' or ''LF'' may be wired to remain permanently activated when the lamps marked ''U'' or ''UF'' are activated. On a motor vehicle equipped with an Integral Beam headlighting system meeting the photometric requirements of paragraph S7.4(a)(1)(ii), the lower beam headlamps shall be wired to remain permanently activated when the upper beam headlamps are activated. On a motor vehicle equipped with a headlighting system designed to conform to the requirements of Figure 17–1 or Figure 17–2, a lower beam light source may be wired to remain activated when an upper beam light source

is activated if the lower beam light source contributes to compliance of the headlighting system with the upper beam requirements of Figure 17–1 or Figure 17–2.

S5.5.9 Except as provided in section S5.5.8, the wiring harness or connector assembly of each headlamp system shall be designed so that only those light sources intended for meeting lower beam photometrics are energized when the beam selector switch is in the lower beam position, and that only those light sources intended for meeting upper beam photometrics are energized when the beam selector switch is in the upper beam position.

S5.5.10 The wiring requirements for lighting equipment in use are:

(a) Turn signal lamps, hazard warning signal lamps, and school bus warning lamps shall be wired to flash;

(b) Headlamps and side marker lamps may be wired to flash for signaling purposes;

(c) A motorcycle headlamp may be wired to allow either its upper beam or its lower beam, but not both, to modulate from a higher intensity to a lower intensity in accordance with section S5.6;

(d) All other lamps shall be wired to be steady-burning.

S5.5.11(a) Any pair of lamps on the front of a passenger car, multipurpose passenger vehicle, truck, or bus, whether or not required by this standard, other than parking lamps or fog lamps, may be wired to be automatically activated, as determined by the manufacturer of the vehicle, in a steady burning state as daytime running lamps (DRLs) and to be automatically deactivated when the headlamp control is in any ''on'' position, and as otherwise determined by the manufacturer of the vehicle, provided that each such lamp:

(1) Has a luminous intensity not less than 500 candela at test point H–V, nor more than 3,000 candela at any location in the beam, when tested in accordance with Section S11 of this standard, unless it is:

(i) A lower beam headlamp intended to operate as a DRL at full voltage, or at a voltage lower than used to operate it as a lower beam headlamp; or

(ii) An upper beam headlamp intended to operate as a DRL, whose luminous intensity at test point H–V is not more than 7,000 candela, and which is mounted not higher than 864 mm above the road surface as measured from the center of the lamp with the vehicle at curb weight;

(2) Is permanently marked ''DRL'' on its lens in letters not less than 3 mm high, unless it is optically combined with a headlamp;

(3) Is designed to provide the same color as the other lamp in the pair, and that is one of the following colors as defined in SAE Standard J578 MAY88: White, white to yellow, white to selective yellow, selective yellow, or yellow;

(4) If not optically combined with a turn signal lamp, is located so that the distance from its lighted edge to the optical center of the nearest turn signal lamp is not less than 100 mm, unless:

(i) The luminous intensity of the DRL is not more than 2,600 candela at any location in the beam and the turn signal meets the requirements of S5.3.1.7; or

(ii) (For a passenger car, multipurpose passenger vehicle, truck, or bus that is manufactured before October 1, 1995, and which uses an upper beam headlamp as a DRL as specified in paragraph S5.5.11(a)(1)(ii)) the luminous intensity of the DRL is greater than 2,600 candela at any location in the beam and the turn signal lamp meets the requirements of S5.3.1.7; or

(iii) The DRL is optically combined with a lower beam headlamp and the turn signal lamp meets the requirements of S5.3.1.7; or

(iv) The DRL is deactivated when the turn signal or hazard warning signal lamp is activated.

(5) If optically combined with a turn signal lamp, is automatically deactivated as a DRL when the turn signal lamp or hazard warning lamp is activated, and automatically reactivated as a DRL when the turn signal lamp or hazard warning lamp is deactivated.

(b) Any pair of lamps that are not required by this standard and are not optically combined with any lamps that are required by this standard, and which are used as DRLs to fulfill the specifications of S5.5.11(a), shall be

mounted at the same height, which shall be not more than 1.067 m above the road surface measured from the center of the lamp on the vehicle at curb weight, and shall be symmetrically disposed about the vertical centerline of the vehicle.

S5.6 [Reserved]

S5.7 *Conspicuity Systems*. Each trailer of 80 or more inches overall width, and with a GVWR over 10,000 lbs., manufactured on or after December 1, 1993, except a trailer designed exclusively for living or office use, and each truck tractor manufactured on or after July 1, 1997, shall be equipped with either retroreflective sheeting that meets the requirements of S5.7.1, reflex reflectors that meet the requirements of S5.7.2, or a combination of retroreflective sheeting and reflex reflectors that meet the requirement of S5.7.3.

S5.7.1 *Retroreflective sheeting*. Each trailer or truck tractor to which S5.7 applies that does not conform to S5.7.2 or S5.7.3 shall be equipped with retroreflective sheeting that conforms to the requirements specified in S5.7.1.1 through S5.7.1.5.

S5.7.1.1 *Construction*. Retroreflective sheeting shall consist of a smooth, flat, transparent exterior film with retroreflective elements embedded or suspended beneath the film so as to form a non-exposed retroreflective optical system.

S5.7.1.2 *Performance requirements*. Retroreflective sheeting shall meet the requirements of ASTM D 4956–90, *Standard Specification for Retroreflective Sheeting for Traffic Control*, for Type V Sheeting, except for the photometric requirements, and shall meet the minimum photometric performance requirements specified in Figure 29.

S5.7.1.3 *Sheeting pattern, dimensions, and relative coefficients of retroreflection*.

(a) Retroreflective sheeting shall be applied in a pattern of alternating white and red color segments to the sides and rear of each trailer, and to the rear of each truck tractor, and in white to the upper rear corners of each trailer and truck tractor, in the locations specified in S5.7.1.4, and Figures 30–1 through 30–4, or Figure 31, as appropriate.

(b) Except for a segment that is trimmed to clear obstructions, or lengthened to provide red sheeting near red lamps, each white or red segment shall have a length of 300 mm ± 150 mm.

(c) Neither white nor red sheeting shall represent more than two thirds of the aggregate of any continuous strip marking the width of a trailer, or any continuous or broken strip marking its length.

(d) Retroreflective sheeting shall have a width of not less than 50 mm (Grade DOT-C2), 75 mm (Grade DOT-C3), or 100 mm (Grade DOT-C4).

(e) The coefficients for retroreflection of each segment of red or white sheeting shall be not less than the minimum values specified in Figure 29 of this standard for grades DOT–C2, DOT–C3, and DOT–C4.

S5.7.1.4 *Location*. (a) Retroreflective sheeting shall be applied to each trailer and truck tractor as specified below, but need not be applied to discontinuous surfaces such as outside ribs, stake post pickets on platform trailers, and external protruding beams, or to items of equipment such as door hinges and lamp bodies on trailers and body joints, stiffening beads, drip rails and rolled surfaces on truck tractors.

(b) The edge of white sheeting shall not be located closer than 75 mm to the edge of the luminous lens area of any red or amber lamp that is required by this standard.

(c) The edge of red sheeting shall not be located closer than 75 mm to the edge of the luminous lens area of any amber lamp that is required by this standard.

S5.7.1.4.1 *Rear of trailers*. Retroreflective sheeting shall be applied to the rear of each trailer as follows, except that Element 2 is not required for container chassis or for platform trailers without bulkheads, and Element 3 is not required for trailers without underride protection devices:

(a) Element 1: A strip of sheeting, as horizontal as practicable, in alternating colors across the full width of the trailer, as close to the extreme edges as practicable, and as close as practicable to not less than 375 mm and not more than 1525 mm above the road surface at the stripe centerline with the trailer at curb weight.

(b) Element 2: Two pairs of white strips of sheeting, each pair consisting

of strips 300 mm long of grade DOT-C2, DOT-C3, or DOT-C4, applied horizontally and vertically to the right and left upper contours of the body, as viewed from the rear, as close to the top of the trailer and as far apart as practicable. If the perimeter of the body, as viewed from the rear, is other than rectangular, the strips may be applied along the perimeter, as close as practicable to the uppermost and outermost areas of the rear of the body on the left and right sides.

(c) Element 3: A strip of sheeting in alternating colors across the full width of the horizontal member of the rear underride protection device. Grade DOT-C2 material not less than 38 mm wide may be used.

S5.7.1.4.2 *Side of trailers.* Retroreflective sheeting shall be applied to each side of a trailer as follows:

(a) A strip of sheeting, as horizontal as practicable, in alternating colors, originating and terminating as close to the front and rear as practicable, as close as practicable to not less than 375 mm and not more than 1525 mm above the road surface at the stripe centerline with the trailer at curb weight, except that at the location chosen the strip shall not be obscured in whole or in part by other motor vehicle equipment or trailer cargo. The strip need not be continuous as long as not less than half of the length of the trailer is covered and the spaces are distributed as evenly as practicable.

(b) If necessary to clear rivet heads or other similar obstructions, grade DOT–C2 retroreflective sheeting may be separated into two 25 mm wide strips of the same length and color, separated by a space of not more than 25 mm, and used in place of the retroreflective sheeting that would otherwise be applied.

S5.7.1.4.3 *Rear of truck tractors.* Retroreflective sheeting shall be applied to the rear of each truck tractor as follows:

(a) Element 1: Two strips of sheeting in alternating colors, each not less than 600 mm long, located as close as practicable to the edges of the rear fenders, mudflaps, or the mudflap support brackets, to mark the width of the truck tractor. The strips shall be mounted as horizontal as practicable, in a vertical plane facing the rear, on the rear fenders, on the mudflap support brackets, on plates attached to the mudflap support brackets, or on the mudflaps. Strips on mudflaps shall be mounted not lower than 300 mm below the upper horizontal edge of the mudflap. If the vehicle is certified with temporary mudflap support brackets, the strips shall be mounted on the mudflaps or on plates transferable to permanent mudflap support brackets. For a truck tractor without mudflaps, the strips may be mounted outboard of the frame on brackets behind the rear axle or on brackets ahead of the rear axle and above the top of the tires at unladen vehicle height, or they may be mounted directly or indirectly to the back of the cab as close to the outer edges as practicable, above the top of the tires, and not more than 1525 mm above the road surface at unladen vehicle height. If the strips are mounted on the back of the cab, no more than 25 percent of their cumulative area may be obscured by vehicle equipment as determined in a rear orthogonal view.

(b) Element 2: Two pairs of white strips of sheeting, each pair consisting of strips 300 mm long, applied as horizontally and vertically as practicable, to the right and left upper contours of the cab, as close to the top of the cab and as far apart as practicable. No more than 25 percent of their cumulative area may be obscured by vehicle equipment as determined in a rear orthogonal view. If one pair must be relocated to avoid obscuration by vehicle equipment, the other pair may be relocated in order to be mounted symmetrically. If the rear window is so large as to occupy all the practicable space, the material may be attached to the edge of the window itself.

S5.7.1.5 *Certification.* The letters DOT–C2, DOT–C3, or DOT–C4, as appropriate, constituting a certification that the retroreflective sheeting conforms to the requirements of S5.7.1.2, shall appear at least once on the exposed surface of each white or red segment of retroreflective sheeting, and at least once every 300 mm on retroreflective sheeting that is white only. The characters shall be not less than 3 mm high, and shall be permanently

stamped, etched, molded, or printed in indelible ink.

S5.7.2 *Reflex Reflectors.* Each trailer or truck tractor to which S5.7 applies that does not conform to S5.7.1 or S5.7.3 shall be equipped with reflex reflectors in accordance with this section.

S5.7.2.1 (a) Each reflex reflector shall conform to SAE Standard J594f, *Reflex Reflectors,* January 1977.

(b) Each red reflex reflector shall also provide, at an observation angle of 0.2 degree, not less than 300 millicandelas/lux at any light entrance angle between 30 degrees left and 30 degrees right, including an entrance angle of 0 degree, and not less than 75 millicandelas/lux at any light entrance angle between 45 degrees left and 45 degrees right.

(c) Each white reflex reflector shall also provide at an observation angle of 0.2 degree, not less than 1250 millicandelas/lux at any light entrance angle between 30 degrees left and 30 degrees right, including an entrance angle of 0 degree, and not less than 300 millicandelas/lux at any light entrance angle between 45 degrees left and 45 degrees right.

(d) A white reflex reflector complying with S5.7.2.1(a) and (c) when tested in a horizontal orientation may be installed in all orientations specified for rear upper locations in S5.7.1.4.1(b) or S5.7.1.4.3(b) if, when tested in a vertical orientation, it provides an observation angle of 0.2 degree not less than 1680 millicandelas/lux at a light entrance angle of 0 degree, not less than 1120 millicandelas/lux at any light entrance angle from 10 degrees down to 10 degrees up, and not less than 560 millicandelas/lux at any light entrance angle from 20 degrees right to 20 degrees left.

S5.7.2.2 Reflex reflectors shall be installed and located as specified below:

(a) In the same locations and in the same length in which retroreflective sheeting is required by S5.7.1.4 to be applied in alternating colors, reflex reflectors shall be installed in a repetitive pattern of two or three white reflex reflectors alternating with two or three red reflex reflectors, with the center of each reflector not more than 100 mm from the center of each adjacent reflector.

(b) In the same locations and in the same length in which white retroreflective sheeting is required by S5.7.1.4 to be installed, white reflex reflectors shall be installed, with the center of each white reflex reflector not more than 100 mm from the center of each adjacent reflector.

S5.7.2.3 *Certification.* The exposed surface of each reflex reflector shall be marked with the letters DOT–C which constitutes a certification that the reflector conforms to all applicable requirements of § 571.108 of this part. The certification shall be not less than 3 mm high, and permanently stamped, etched, molded or printed in indelible ink.

S5.7.3 *Combination of sheeting and reflectors.* Each trailer or truck tractor to which S5.7 applies that does not conform to S5.7.1 or S5.7.2, shall be equipped with retroreflective materials that meet the requirements of S5.7.1 except that reflex reflectors that meet the requirements of S5.7.2.1, and that are installed in accordance with S5.7.2.2, may be used instead of any corresponding element of retroreflective sheeting located as required by S5.7.1.4.

S5.8 *Replacement Equipment.*

S5.8.1 Except as provided below, each lamp, reflective device, or item of associated equipment manufactured to replace any lamp, reflective device, or item of associated equipment on any vehicle to which this standard applies, shall be designed to conform to this standard.

S5.8.2 A Type C replacement headlamp designed to conform to the requirements of paragraph S7.3.2(a) through (d) of this standard may be marked ''1'' and ''2'' rather than ''1C1'' and ''2C1'' respectively. A Type D replacement headlamp designed to conform to S7.3.2(a) through (c) and S7.3.5(b) of this standard may be marked ''TOP'' or ''2'' rather than ''2D1''.

S5.8.3 (a) Each stop lamp manufactured to replace a stop lamp that was designed to conform to SAE Standard J586b, *Stop Lamps,* June 1966, may also be designed to conform to J586b. It shall meet the photometric minimum

candlepower requirements for Class A red turn signal lamps specified in SAE Standard J575d, *Test for Motor Vehicle Lighting Devices and Components,* August 1967. Each such lamp manufactured for use on a passenger car and on a multipurpose passenger vehicle, truck, trailer or bus less than 80 inches in overall width shall have an effective projected luminous area not less than 3½ square inches. If multiple compartment lamps or multiple lamps are used, the effective projected luminous area of each compartment or lamp shall be not less than 3½ square inches; however, the photometric requirements may be met by a combination of compartments or lamps.

(b) Each stop lamp manufactured to replace a stop lamp that was designed to conform to SAE Standard J586c, *Stop Lamps,* August 1970, may also be designed to conform to J586c.

S5.8.4 (a) Each turn signal lamp manufactured to replace a turn signal lamp that was designed to conform to SAE Standard J588d, *Turn Signal Lamps,* June 1966, may also be designed to conform to J588d, and shall meet the photometric minimum candlepower requirements for Class A turn signal lamps specified in SAE Standard J575d, *Tests for Motor Vehicle Lighting Devices and Components,* August 1967. Each such lamp manufactured for use on a passenger car and on a multipurpose passenger vehicle, truck, trailer or bus less than 80 inches in overall width shall have an effective projected luminous area not less than 3½ square inches. If multiple compartment lamps or multiple lamps are used, the effective projected luminous area of each compartment or lamp shall be not less than 3½ square inches; however, the photometric requirements may be met by a combination of compartments or lamps. Each such lamp manufactured for use on a multipurpose passenger vehicle, truck, trailer or bus 80 inches or more in overall width shall have an effective projected luminous area not less than 12 square inches.

(b) Each turn signal lamp manufactured to replace a turn signal lamp that was designed to conform to SAE Standard J588e, *Turn Signal Lamps,* September 1970, may also be designed to conform to SAE Standard J588e.

S5.8.5 Note 6 of Table 1 of SAE Standard J588e does not apply.

S5.8.6. Instead of the photometric values specified in SAE Standards J586c and J588e, a stop lamp manufactured to replace a stop lamp designed to conform to SAE Standard J586c, or a turn signal lamp manufactured to replace a turn signal lamp designed to conform to SAE Standard J588e, shall meet the minimum percentage specified in Figure 1a of the corresponding minimum allowable value specified in Figure 1b. The maximum candlepower output of each such stop lamp or turn signal lamp shall not exceed that prescribed in Figure 1b. If the sum of the percentages of the minimum candlepower measured at the test points is not less than that specified for each group listed in Figure 1c, a stop lamp or turn signal lamp is not required to meet the minimum photometric value at each test point specified in SAE Standards J586c and J588e, respectively.

S5.8.7 Note 6 of Table 1 in SAE Standard J588e, *Turn Signal Lamps,* September 1970, does not apply.

S5.8.8 Each taillamp manufactured to replace a taillamp designed to conform to SAE Standard J585d, *Tail Lamps,* August 1970, may also be designed to conform to J585d.

S5.8.9 Each turn signal lamp manufactured to replace a turn signal lamp (on a motorcycle) that was designed to conform to SAE Standard J588d, *Turn Signal Lamps,* June 1966, may also be designed to conform to J588d.

S5.8.10 Unless otherwise specified in this standard, each lamp, reflective device, or item of associated equipment to which paragraph S5.8.1 applies may be labeled with the symbol DOT, which shall constitute a certification that it conforms to applicable Federal motor vehicle safety standards.

S5.8.11 A replacement lens for a replaceable bulb headlamp or an integral beam headlamp that is not required to have a bonded lens shall be provided with a replacement seal in a package that includes instructions for the removal and replacement of the lens, the cleaning of the reflector, and the sealing of the replacement lens to the reflector assembly.

S6. *Subreferenced SAE Standards and Recommended Practices*

S6.1 SAE Standards and Recommended Practices subreferenced by the SAE Standards and Recommended Practices included in Tables I and III and paragraphs S5.1.4 and S5.5.1 are those published in the 1970 edition of the SAE Handbook, except that the SAE standard referred to as ''J575'' is J575e, *Tests for Motor Vehicle Lighting Devices and Components*, August 1970, for stoplamps designed to conform to SAE Standards J586c, J586 FEB84, and J1398 MAY85; for taillamps designed to conform to SAE Standards J585d and J585e; for turn signal lamps designed to conform to SAE Standards J588e, J588 NOV84, and J1395 APR85; and for high-mounted stoplamps designed to conform to SAE Recommended Practice J186a. The reference in J585e to J256 does not apply. For headlamps other than motorcycle headlamps, unless otherwise specified in this standard, the version of SAE Standard J575 is DEC88, and the version of SAE Standard J602 is OCT80.The definition of ''optically combined'' in SAE Information Report J387 *Terminology—Motor Vehicle Lighting* NOV87, applies to that term as used in J586c and J588e.

S6.2 Requirements of SAE Standards incorporated by reference in this standard, other than J576b and J576c, do not include test for warpage of devices with plastic lenses.

S6.3 The term ''effective projected luminous lens area'' has the same meaning as the term ''functional lighted lens area'' in any SAE Standard or Recommended Practice incorporated by reference or by subreference in this standard.

S7. *Headlighting requirements.*

S7.1 Each passenger car, multipurpose passenger vehicle, truck, and bus manufactured on or after September 1, 1994, shall be equipped with a headlighting system designed to conform to the requirements of S7.3, S7.4, S7.5, or S7.6.

S7.2(a) The lens of each original and replacement equipment headlamp, and of each original equipment and replacement equipment beam contributor shall be marked with the symbol ''DOT'' either horizontally or vertically which shall constitute the certification required by 49 U.S.C. 30115.

(b) The lens of each headlamp and of each beam contributor manufactured on or after December 1, 1989, to which paragraph (a) of this section applies shall be marked with the name and/or trademark registered with the U.S. Patent and Trademark Office of the manufacturer of such headlamp or beam contributor, or its importer, or any manufacturer of a vehicle equipped with such headlamp or beam contributor. Nothing in this paragraph shall be construed to authorize the marking of any such name and/or trademark by one who is not the owner, unless the owner has consented to it.

(c) Each headlamp and beam contributor to which paragraph (a) of this section applies shall be marked with its voltage and with its part or trade number.

(d) Unless stated otherwise, a tolerance of +/− ¼ degree is permitted during photometric performance tests for any headlamp or beam contributor, and the test points 10U–90U shall be measured from the normally exposed surface of the lens face. The term 'aiming plane' means 'aiming reference plane' or an appropriate vertical plane defined by the manufacturer as required in S7.7.1.

(e) Each replacement headlamp lens with seal, provided in accordance with S5.8.11, when installed according to the lens manufacturer's instructions on an integral beam or replaceable bulb headlamp, shall not cause the headlamp to fail to comply with any of the requirements of this standard. Each replacement headlamp lens shall be marked with the symbol ''DOT'', either horizontally or vertically, to constitute certification. Each replacement headlamp lens shall also be marked with the manufacturer and the part or trade number of the headlamp for which it is intended, and with the name and/or trademark of the lens manufacturer or importer that is registered with the U.S. Patent and Trademark Office. Nothing in this paragraph shall be construed to authorize the marking of any such name and/or trademark by one who is not the owner, unless the owner has consented to it.

S7.3 *Sealed beam headlighting system.* A sealed beam headlighting system shall be designed to meet the requirements of one of the following subparagraphs of S7.3.2 through S7.3.9. In references to Figures in SAE J1383 APR85 for headlamp dimensional requirements, only those dimensions marked ''I'' for interchangeability are applicable.

S7.3.1 The lens of each sealed beam headlamp designed to conform to S7.3.2 through S7.3.6 shall be marked according to paragraph 5.4.3 through 5.4.5 of SAE Standard J1383 APR85 *Performance Requirements for Motor Vehicle Headlamps*.

S7.3.2 *Type A headlighting system.* A Type A headlighting system consists of two Type 1A1 and two Type 2A1 headlamps and associated hardware, which are designed to conform to the following requirements:

(a) SAE Standard J1383 APR85 *Performance Requirements for Motor Vehicle Headlamps*, with the following exceptions:

(1) Paragraphs 1, 2.1.2, 2.8.2, 3, 4.1.1, 4.1.2, 4.1.3, 4.4, 4.6, 4.8 through 4.18, 5.1.1, 5.1.3, 5.1.5, 5.1.7 through 5.1.16, 5.2.2, 5.3.5, 5.4.1, 5.4.2, and 6 through 6.4 do not apply.

(2) In paragraph 5.3.2, the words ''and retaining rings'' are omitted.

(3) In paragraphs 4.5.2 and 5.1.6, the words ''Figure 28–1 or 28–2 of Motor Vehicle Safety Standard No. 108'' are substituted for ''Table 3.''

(b) SAE Standard J580 DEC86 *Sealed Beam Headlamp Assembly* (except paragraphs 3, 4.1.1, 5.1.1.1, 5.1.2.3, and the second sentence of 5.1.6); in 5.2.1, delete the words ''and retaining rings;'' the correct reference is SAE J1383 Figures 6, 9, 12 and 14.

(c) After a vibration test conducted in accordance with paragraph S8.8, there shall be no evidence of loose or broken parts, other than filaments, visible without magnification.

(d) The maximum wattage at 12.8 volts (design voltage): Single filament headlamp, 55 watts on the upper beam; dual filament headlamp, 43 watts on the upper beam and 65 watts on the lower beam.

S7.3.3 *Type B headlighting system.* A Type B headlighting system consists of two Type 2B1 headlamps and associated hardware, which are designed to conform to the following requirements:

(a) The requirements of paragraph S7.3.2 (a) through (c), except that the words ''Figure 27–1 or Figure 27–2'' are substituted for ''Table 3'' in paragraph S7.3.2(a)(3).

(b) The maximum wattage at 12.8 volts (design voltage): 70 watts on the upper beam and 60 watts on the lower beam.

S7.3.4 *Type C headlighting system.* A Type C headlighting system consists of two Type 1C1 and two Type 2C1 headlamps and associated hardware, which are designed to conform to the requirements of paragraph S7.3.2 (a) through (d), except that the words ''Figure 28–1 or Figure 28–2'' are substituted for ''Table 3'' in paragraph S7.3.2(a)(3).

S7.3.5 *Type D headlighting system.* (a) A Type D headlighting system consists of two Type 2D1 headlamps and associated hardware, which are designed to conform to the requirements of paragraph S7.3.2 (a) through (c), except that the words ''Figure 27–1 or Figure 27–1'' are substituted for ''Table 3'' in paragraph S7.3.2(a)(3).

(b) The maximum wattage at 12.8 volts (design voltage): 65 watts on upper beam, and 55 watts on lower beam.

S7.3.6 *Type E headlighting system.* (a) A Type E headlighting system consists of two Type 2E1 headlamps and associated hardware, which are designed to conform to the requirements of paragraph S7.3.2 (a) through (c), except that the words ''Figure 27–1 or Figure 27–1'' are substituted for ''Table 3'' in paragraph S7.3.2(a)(3).

(b) The maximum wattage at 12.8 volts (design voltage): 70 watts on upper beam, and 60 watts on lower beam.

S7.3.7 *Type F headlighting system.* A Type F headlighting system consists of two Type UF and two Type LF headlamps and associated hardware, which are designed to conform to the following requirements:

(a) Figures 11, 12, 13, and 14 as appropriate.

(b) The photometric requirements of Figure 15–1 or Figure 15–2 of this standard. A reaim tolerance of +/− ¼ degree is allowed for any test point on the

Type LF lamp when tested alone, but is not allowed on the Type UF lamp when tested alone. For the test point 10U–90U, measurement shall be from the normally exposed surface of the lens face.

(c) SAE Standard J1383 APR85 *Performance Requirements for Motor Vehicle Headlamps,* Sections 2.4, 2.5, 2.6, 4.1, 4.1.4, and 5.1.4.

(d) When tested in accordance with section (c), the mounted assembly (either Type UF or Type LF headlamps, respective mounting ring, aiming ring, and aim adjustment mechanism) shall be designed to conform to the requirements of Figure 15–1 or Figure 15–2 for upper or lower beams respectively without reaim when any conforming Type UF or LF headlamp is tested and replaced by another conforming headlamp of the same Type.

(e) SAE J580 DEC86 *Sealed Beam Headlamp Assembly* with the following exceptions:

(1) Section 2.2 Mounting Ring reads: ''the adjustable ring upon which the sealed beam unit is mounted and which forces the sealed beam unit to seat against the aiming ring when assembled into a sealed beam assembly.''

(2) The definition ''2.3 Aiming Ring'' reads: ''The clamping ring that retains the sealed beam unit against the mounting ring, and that provides an interface between the unit's aiming/seating pads and the headlamp aimer adapter (locating plate).''

(3) Section 4.1.1 Vibration Test does not apply.

(4) Sections 5.1.1.1 and 5.1.2.3 do not apply.

(5) Section 5.1.2.1 reads: ''When the headlamp assembly is tested in the laboratory, a minimum aiming adjustment of +/− 2.5 degrees shall be provided in the horizontal plane and +/− 4 degrees in the vertical plane.''

(6) Section 5.1.2.2 concludes: ''* * * through an angle of +/− 2.5 degrees and +/− 4 degrees respectively.''

(7) Section 5.1.6 is retitled ''Retaining Ring/Aiming Ring Tests''. The phrase ''92×150 mm * * * 0.340 in (8.6 mm)'' is added at the end of the table for flange thickness. The sentence beginning ''The fastening means'' is deleted.

(8) Figures 2, 3, and 4 do not apply, and the reference to them in section 4.5 is replaced by ''Figure 16, Deflectometer, of Federal Motor Vehicle Safety Standard No. 108.''

(f) A lens for a Type F headlamp incorporating an upper beam shall be labeled ''UF.'' A lens for a Type F headlamp incorporating a lower beam shall be labeled ''LF''. The face of letters, numbers, or other symbols molded on the surface of the lens shall not be raised more than 0.020 in (0.5 mm), and shall be placed no closer to the geometric center of the lens than 1.375 in. (35 mm). The marking shall be molded in the lens and shall be not less than ¼ in. (6.35 mm) in size.

(g) The maximum wattage at 12.8 volts (design voltage): 70 watts on the upper beam and 60 watts on the lower beam.

(h) Type F headlamps may be mounted on common or parallel seating and aiming planes to permit simultaneous aiming of both headlamps provided that when tested with any conforming Type UF and LF headlamps according to Section S10:

(1) The assembly (consisting of the Type UF and LF headlamps, mounting rings, the aiming/seating rings, and aim adjustment mechanism) shall be designed to conform to the test points of Figure 15–1 or Figure 15–2.

(2) There shall be no provision for adjustment between the common or parallel aiming and seating planes of the two lamps.

(i) After a vibration test conducted in accordance with paragraph S8.8, the Type F system shall show no evidence of loose or broken parts, other than filaments, visible without magnification.

S7.3.8 *Type G headlighting system.* A Type G headlamp system consists of two Type 1G1 headlamps and two Type 2G1 headlamps each of which is designed to conform to the following requirements:

(a) Figures 18 and 21.

(b) SAE Standard J1383 APR85 *Performance Requirements for Motor Vehicle Headlamps* (except paragraphs 1, 2.1.2, 2.8.2,3, 4.1.1, 4.1.2, 4.1.3, 4.4, 4.6, 4.8 through 4.18, 5.1.1, 5.1.3, 5.1.5 through 5.1.16, 5.2.2, 5.3.5 through 6.4). In paragraph 5.3.2 the words ''and retaining

rings'' are omitted. In paragraph 4.5.2, the words ''either Figure 28–1, or Figure 28–2'' are substituted for ''Table 3''.

(c) SAE Standard J580 DEC86 *Sealed Beam Headlamp Assembly*, with the following exceptions:

(1) Sections 2.2, 2.3, 4.1.1, 5.1.1.1, 5.1.2.3, 5.1.6, and 5.2.1.

(2) Section 4.5 reads: ''*Torque Deflection Test*. The headlamp assembly to be tested shall be mounted in the designed vehicle position and set at nominal aim (0.0). A special adapter (Figure 22) for the deflectometer (Figure 16) shall be clamped onto the headlamp assembly. A torque of 20 in.-lbs (2.25 N–m) shall be applied to the headlamp assembly through the deflectometer, and a reading on the thumb wheel shall be taken. The torque shall be removed and a second reading on the thumb wheel shall be taken.''

(d) After a vibration test conducted in accordance with paragraph S8.8, there shall be no evidence of loose or broken parts, other than filaments, visible without magnification.

(e) The maximum wattage at 12.8 volts (design voltage) for the 1G1 and 2G1 upper beam is 55 watts and 43 watts respectively; for the 2G1 lower beam, 65 watts.

(f) A lens for a Type G headlamp incorporating only part of an upper beam shall be labeled ''1G1.'' A lens for a Type G headlamp incorporating both part of an upper beam and a lower beam shall be labeled ''2G1.'' The face of letters, numbers, or other symbols molded on the surface of the lens shall not be raised more than 0.020 in. (0.5 mm.), and shall be placed no closer to the geometric center of the lens than 1.375 in. (35 mm). The marking shall be molded in the lens and shall be not less than ¼ in. (6.35 mm) in size.

S7.3.9 *Type H headlighting system*. A Type H headlamp system consisting of two Type 2H1 headlamps and associated hardware, which are designed to conform to the following requirements:

(a) Paragraphs S7.3.8 (a) through (d) except that in paragraph S7.3.8(b), the words ''Figure 27–1 or Figure 27–2'' are substituted for ''Table 3.''

(b) The maximum wattage at 12.8 volts (design voltage): 70 watts on the upper beam and 60 watts on the lower beam.

(c) A lens for a Type H headlamp incorporating both an upper beam and a lower beam shall be labeled ''2H1.'' The face of letters, numbers, or other symbols molded on the surface of the lens shall not be raised more than 0.020 in. (0.5 mm), and shall be placed no closer to the geometric center of the lens than 1.375 in. (35 mm). The marking shall be molded in the lens and shall be not less than ¼ in. (6.35 mm) in size.

S7.4 *Integral Beam Headlighting System*. An integral beam headlighting system shall be designed to conform to the following requirements:

(a) The system shall provide in total not more than two upper beams and two lower beams of the performance described in one of the following:

(1) In a four-headlamp system, each upper beam headlamp and each lower beam headlamp shall be designed to conform to the photometrics of one of the following:

(i) Figure 15–1 or Figure 15–2; or

(ii) Figure 15–1 or Figure 15–2, except that the upper beam test value at 2.5 D–V and 2.5D–12R and 12L, shall apply to the lower beam headlamp and not to the upper beam headlamp, and the upper beam test point value at 1.5D–9R and 9L shall be 1000; or

(iii) Figure 28–1 or Figure 28–2.

(2) In a two-headlamp system, each headlamp shall be designed to conform to the photometrics of one of the following:

(i) Figure 17–1 or Figure 17–2; or

(ii) Figure 27–1 or Figure 27–2.

(3) In a system in which there is more than one beam contributor providing a lower beam, and/or more than one beam contributor providing an upper beam, each beam contributor in the system shall be designed to meet only the photometric performance requirements of Figure 15–1 or Figure 15–2 based upon the following mathematical expression: conforming test point value = 2 (Figure 15–1 or Figure 15–2 test point value)/total number of lower or upper beam contributors for the vehicle, as appropriate. The system shall be designed to use the Vehicle Headlamp Aiming Device (VHAD) as specified in paragraph S7.8.5.2.

(b) The lower and upper beams shall be provided only as follows where each headlamp contains two light sources:

(1) The lower beam shall be provided either by the most outboard light source (or the uppermost if arranged vertically), or by all light sources.

(2) The upper beam shall be provided either by the most inboard light source (or the lowermost if arranged vertically), or by all light sources.

(c) The lower and upper beams shall be provided only as follows where each headlamp contains a single light source:

(1) The lower beam shall be provided by the most outboard headlamps (or the uppermost if arranged vertically), and the lens of each such headlamp shall be permanently marked with the letter ''L.''

(2) The upper beam shall be provided by the most inboard headlamps (or lowermost if arranged vertically), and the lens of each such headlamp shall be permanently marked with the letter ''U.''

(d) A headlamp or beam contributor designed to meet paragraphs (a)(1) or (a)(3) of this section and S7.8.5.1 may be mounted in an assembly to permit simultaneous aiming of the beam(s) contributors, provided that with any complying contributor the assembly complete with all lamps meets the appropriate photometric requirements when tested in accordance with S10.

(e) Each integral beam headlamp system shall be designed to conform to the applicable photometric performance requirements in paragraph (a) of this section when tested in accordance with sections 4.1 and 4.1.4 of SAE Standard J1383 APR85 with any headlamps intended for use in such system. The term ''aiming plane'' means ''aiming reference plane,'' or an appropriate vertical plane defined by the manufacturer as required in paragraph S7.8.1.

(f) The system shall be aimable in accordance with the requirements of paragraph S7.8. A system that incorporates any headlamp or beam contributor that does not have a VHAD as an integral and indivisible part of the headlamp or beam contributor shall be designed so that the appropriate photometrics are met when any correctly aimed and photometrically conforming headlamp or beam contributor is removed from its mounting and aiming mechanism, and is replaced without reaim by any conforming headlamp or beam contributor of the same type.

(g) A headlamp with a glass lens need not meet the abrasion resistance test (S8.2). A headlamp with a nonreplaceable glass lens need not meet the chemical resistance test (S8.3). A headlamp with a glass lens and a non-plastic reflector need not meet the internal heat test of paragraph S8.6.2. A headlamp of sealed design as verified in paragraph S8.9 (sealing) need not meet the corrosion (S8.4), dust (S8.5), or humidity (S8.7) tests; however, the headlamp shall meet the requirements of paragraphs 4.1, 4.1.2, 4.4 and 5.1.4 for corrosion and connector of SAE Standard J580 DEC86 *Sealed Beam Headlamp Assembly*. An integral beam headlamp may incorporate light sources that are replaceable and are used for purposes other than headlighting.

(h) When tested according to any of the procedures indicated in subparagraphs (1) through (7) each headlamp or beam contributor shall meet the appropriate requirement:

(1) After an abrasion test conducted in accordance with paragraph S8.2, the headlamp shall meet the photometric requirements applicable to the headlamp system under test.

(2) After the chemical resistance tests of paragraphs S8.3 and S8.10.1, the headlamp shall have no surface deterioration, coating delamination, fractures, deterioration of bonding or sealing materials, color bleeding or color pickup visible without magnification, and the headlamp shall meet the photometric requirements applicable to the headlamp system under test.

(3) After a corrosion test conducted in accordance with paragraph S8.4, there shall be no evidence of external or internal corrosion or rust visible without magnification. After a corrosion test conducted in accordance with paragraph S8.10.2, there shall be no evidence of corrosion or rust visible without magnification on any part of the headlamp reflector that receives light from a headlamp light source, on any metal light or heat shield assembly, or on a metal reflector of any other lamp not sealed from the headlamp reflector. Loss of adhesion of any applied coating shall not occur more than 0.125 in. (3.2 mm) from any sharp edge on the inside

or outside. Corrosion may occur on terminals only if the current produced during the test of paragraph S8.4(c) is not less than 9.7 amperes.

(4) After a dust test conducted in accordance with paragraph S8.5, the headlamp shall meet the photometric requirements applicable to the headlamp system under test.

(5) The headlamp shall first meet the requirements of subparagraph (i) and then those of subparagraph (ii).

(i) After a temperature cycle test conducted in accordance with paragraph S8.6.1, the headlamp shall show no evidence of delamination, fractures, entry of moisture or deterioration of bonding material, color bleeding, warpage or deformation visible without magnification or lens warpage greater than .118 in. (3 mm) when measured parallel to the optical axis at the point of intersection of the axis of each light source with the exterior surface of the lens, and it shall meet the photometric requirements applicable to the headlamp system under test.

(ii) After an internal heat test conducted in accordance with paragraph S8.6.2, there shall be no lens warpage greater than .118 in. (3 mm) when measured parallel to the optical axis at the point of intersection of the axis of each light source with the exterior surface of the lens, and it shall meet the photometric requirements applicable to the headlamp system under test.

(6) After a humidity test conducted in accordance with paragraph S8.7, the inside of the headlamp shall show no evidence of delamination or moisture, fogging or condensation visible without magnification.

(7) After a vibration test conducted in accordance with paragraph S8.8, there shall be no evidence of loose or broken parts, other than filaments, visible without magnification.

(i) An integral beam headlamp may incorporate replaceable light sources that are used for purposes other than headlighting.

S7.5 *Replaceable bulb headlamp system.* Each replaceable bulb headlamp system shall be designed to conform to the following requirements:

(a) The system shall provide only two lower beams and two upper beams and shall incorporate not more than two replaceable light sources in each headlamp.

(b) The photometrics as specified in subparagraphs (c) through (e) of this paragraph (depicted in Figure 26), using any light source of the Type intended for use in such system.

(c) The test requirements of sections 4.1, 4.1.4, and performance requirements of section 5.1.4 of SAE J1383 APR85, using the photometric requirements specified in subparagraphs (d) and (e) of this paragraph.

(d) For a headlamp equipped with dual filament replaceable light sources, the following requirements apply:

(1) Headlamps designed to conform to the external aiming requirements of S7.8.5.1 shall have no mechanism that allows adjustment of an individual light source, or, if there are two light sources, independent adjustments of each reflector.

(2) The lower and upper beams of a headlamp system consisting of two lamps, each containing either one or two replaceable light sources, shall be provided as follows:

(i) The lower beam shall be provided in one of the following ways:

(A) By the outboard light source (or upper one if arranged vertically) designed to conform to:

(*1*) The lower beam requirements of Figure 27–1 or Figure 27–2, or Figure 17–1 or Figure 17–2, if the light sources in the headlamp system are any combination of dual filament replaceable light sources other than Type HB2; or

(*2*) The lower beam requirements of Figure 17–1 or Figure17–2 if the light sources are Type HB2, or any dual filament replaceable light sources that include Type HB2; or

(B) By both light sources in the headlamp, designed to conform to the lower beam requirements specified above.

(ii) The upper beam shall be provided in one of the following ways:

(A) By the inboard light source (or the lower one if arranged vertically) designed to conform to:

(*1*) The upper beam requirements of Figure 27–1 or Figure 27–2, or Figure 17–1 or Figure 17–2 if the light sources in the headlamp system are any combination of dual filament replaceable light sources that include Type HB2, or

(*2*) The upper beam requirements of figure 17–1 or Figure 17–2 if the light sources are type HB2, or any combination of replaceable light sources that include Type HB2; or

(B) By both light sources in the headlamp, designed to conform to the upper beam requirements specified above.

(3) The lower and upper beams of a headlamp system consisting of four lamps, each containing a single replaceable light source, shall be provided as follows:

(i) The lower beam shall be provided by the outboard lamp (or the upper one if arranged vertically), designed to conform to:

(A) The lower beam requirements of Figure 27–1 or Figure 27–2, or Figure 15–1 or Figure 15–2 if the light sources in the headlamp system are any combination of dual filament light sources other than Type HB2; or

(B) The lower beam requirements of Figure 15–1 or Figure 15–2 if the light sources are Type HB2, or dual filament light sources other than Type HB1 and HB5. The lens of each such headlamp shall be marked with the letter ''L''.

(ii) The upper beam shall be provided by the inboard lamp (or the lower one if arranged vertically), designed to conform to:

(A) The upper beam requirements of Figure 27–1 or Figure 27–2, of Figure 15–1 or Figure 15–2 if the light sources in the headlamp system are any combination of dual filament light sources other than Type HB2; or

(B) The upper beam requirements of Figure 15–1 or Figure 15–2 if the light sources are Type HB2, or dual filament light sources other tha Type HB1 and Type HB5. The lens of each such headlamp shall be marked with the letter ''u''.

(e) The following requirements apply to a headlamp system equipped with any combination of replaceable light sources except those specified in paragraph (d) of this section:

(1) Headlamps designed to conform to the external aim requirements of S7.8.5.1 shall have no mechanism that allows adjustment of an individual light source, or, if there are two replaceable light sources, independent adjustment of each reflector.

(2) The lower and upper beams of a headlamp system consisting of two lamps, each containing a combination of two replaceable light sources (other than those combinations specified in subparagraph (d) of this paragraph) shall be provided only as follows:

(i) The lower beam shall be provided in one of the following ways:

(A) By the outboard light source (or the uppermost if arranged vertically) designed to conform to the lower beam requirements of Figure 17–1 or Figure 17–2; or

(B) By both light sources, designed to conform to the lower beam requirements of Figure 17–1 or Figure 17–2.

(ii) The upper beam shall be provided in one of the following ways:

(A) By the inboard light source (or the lower one if arranged vertically) designed to conform to the upper beam requirements of Figure 17–1 or Figure 17–2; or

(B) By both light sources, designed to conform to the upper beam requirements of Figure 17–1 or Figure 17–2.

(3) The lower and upper beams of a headlamp system consisting of four lamps, using any combination of replaceable light sources except those specified in subparagraph (d) of this paragraph, each lamp containing only a single replaceable light source, shall be provided only as follows:

(i) The lower beam shall be produced by the outboard lamp (or upper one if arranged vertically), designed to conform to the lower beam requirements of Figure 15–1 or Figure 15–2. The lens of each headlamp shall be permanently marked with the letter ''L''.

(ii) The upper beam shall be produced by the inboard lamp (or lower one of arranged vertically), designed to conform to the upper beam requirements of Figure 15–1 or Figure 15–2. The lens of each headlamp shall be permanently marked with the letter ''U''.

(f) Each lens reflector unit manufactured as replacement equipment shall be designed to conform to the requirements of subparagraphs (d) and (e) of this paragraph when any replaceable light source appropriate for such unit is inserted in it.

(g) The lens of each replaceable bulb headlamp shall bear permanent marking in front of each replaceable light

source with which it is equipped that states the HB Type, if the light source is designed to conform to subparagraphs (a) through (e) of paragraph S7.7, or the bulb marking/ designation provided in compliance with Section VIII of appendix A of part 564, if the light source is designed to conform to subparagraph (g) of paragraph S.7.7 No marking need be provided if the only replaceable light source in the headlamp is Type HB1.

(h) The system shall be aimable in accordance with paragraph S7.8.

(i) Each headlamp shall meet the requirements of paragraphs S7.4(g) and (h), except that the sentence in paragraph (g) to verify sealing according to section S8.9 *Sealing* does not apply.

(j) A replaceable bulb headlighting system may incorporate replaceable light sources that are used for purposes other than headlighting.

S7.6 *Combination Headlighting System.* A combination headlighting system shall be comprised of either two headlamps designed to conform to the requirements of S7.6.2, or any combination of four headlamps designed to conform to the requirements of S7.3.7, S7.4, or S7.5 of this standard.

S7.6.1 A combination headlighting system shall provide in total not more than two upper beams and two lower beams. When installed on a motor vehicle, the headlamps (or parts thereof) that provide the lower beam shall be of the same type, and provide a symmetrical effective projected luminous lens area when illuminated.

S7.6.2 In a combination headlighting system consisting of two headlamps, each headlamp shall be designed to conform to Figure 17–1 or Figure 17–2 and shall be a combination of two different headlamps chosen from the following types: a Type F headlamp, an integral beam headlamp, and a replaceable bulb headlamp.

S7.6.2.1 That part of the headlamp which contains an integral beam headlamp, or beam contributors used in place of a single headlamp, shall be designed to conform to the requirements of S7.4 (c) through (h) of this standard.

S7.6.2.2 That part of the headlamp which contains a replaceable bulb headlamp shall be designed to conform to the requirements of S7.5 of this standard.

S7.6.3 In a combination headlighting system consisting of four headlamps, each headlamp shall be designed to conform to Figure 15–1 or Figure 15–2, or if an integral beam headlamp in which there is more than one beam contributor, designed to conform to Figure 15–1 or Figure 15–2 in the manner required by S7.4(a)(3) of this standard.

S7.7 *Replaceable light sources.* Each replaceable light source shall be designed to conform to the dimensions and electrical specifications furnished with respect to it pursuant to part 564 of this chapter, and shall conform to the following requirements:

(a) If other than an HB Type, the light source shall be marked with the bulb marking designation specified for it in compliance with Appendix A or Appendix B of part 564 of this chapter. The base of each HB Type shall be marked with its HB Type designation. Each replaceable light source shall also be marked with the symbol DOT and with a name or trademark in accordance with paragraph S7.2.

(b) The measurement of maximum power and luminous flux that is submitted in compliance with Appendix A or Appendix B of part 564 of this chapter shall be made in accordance with this paragraph. The filament or discharge arc shall be seasoned before measurement of either. Measurement shall be made with the direct current test voltage regulated within one quarter of one percent. The test voltage shall be 12.8v. The measurement of luminous flux shall be in accordance with the Illuminating Engineering Society of North America, LM–45, *IES Approved Method for Electrical and Photometric Measurements of General Service Incandescent Filament Lamps* (April 1980); shall be made with the black cap installed on Type HB1, Type HB2, Type HB4, and Type HB5, and on any other replaceable light source so designed; and shall be made with the electrical conductor and light source base shrouded with an opaque white cover, except for the portion normally located within the interior of the lamp housing. The measurement of luminous flux for the Types HB3 and HB4 shall be

made with the base covered with a white cover as shown in the drawings for Types HB3 and HB4 filed in Docket No. NHTSA 98–3397. (The white cover is used to eliminate the likelihood of incorrect lumen measurement that will occur should the reflectance of the light source base and electrical connector be low).

(c) The capsule, lead wires and/or terminals, and seal on each Type HB1, Type HB3, Type HB4, and Type HB5 light source, and on any other replaceable light source which uses a seal, shall be installed in a pressure chamber as shown in Figure 25 so as to provide an airtight seal. The diameter of the aperture in Figure 25 on a replaceable light source (other than an HB Type) shall be that dimension furnished for such light source in compliance with Appendix A or Appendix B of part 564 of this chapter. An airtight seal exists when no air bubbles appear on the low pressure (connector) side after the light source has been immersed in water for one minute while inserted in a cylindrical aperture specified for the light source, and subjected to an air pressure of 70kPa (10 P.S.I.G.) on the glass capsule side.

(d) The measurement of maximum power and luminous flux that is submitted in compliance with section VII of Appendix A of part 564 of this chapter, or section IV of Appendix B of part 564 of this chapter, shall be made with the direct current test voltage regulated within one quarter of one percent. The test voltage shall be 12.8v. The measurement of luminous flux shall be in accordance with the Illuminating Engineering Society of North America, LM 45; *IES Approved Method for Electrical and Photometric Measurements of General Service Incandescent Filament Lamps* (April 1980). The filament of a replaceable light source shall be seasoned before such measurement. The white covers are used to eliminate the likelihood of incorrect lumens measurement that will occur should the reflectance of the light source base and electrical connector be low.

(1) For a light source with a resistive element type filament, seasoning of the light source shall be made in accordance with section 2.9 of SAE Standard J1383 APR85 *Performance Requirements for Motor Vehicle Headlamps*. The measurement of luminous flux shall be made with the black cap installed on Type HB1, Type HB2, Type HB4, and Type HB5 light sources, and on any other replaceable light source so designed, and shall be made with the electrical conductor and light source base shrouded with an opaque white colored cover, except for the portion normally located within the interior of the lamp housing. The measurement of luminous flux for Type HB3 and Type HB4 shall be made with the base covered with the white cover shown in the drawings for Types HB3 and HB4 filed in Docket No. NHTSA 98–3397.

(2) For a light source using excited gas mixtures as a filament or discharge arc, seasoning of the light source system, including any ballast required for its operation, shall be made in accordance with section 4.0 of SAE Recommended Practice J2009 FEB93 *Discharge Forward Lighting Systems*. With the test voltage applied to the ballast input terminals, the measurement of luminous flux shall be made with the black cap installed, if so designed, and shall be made with an opaque white colored cover, except for the portion normally located within the interior of the lamp housing.

(e) If a ballast is required for operation, each ballast shall bear the following permanent markings:

(1) Name or logo of ballast manufacturer;

(2) Ballast part number or unique identification;

(3) Part number or other unique identification of the light source for which the ballast is designed;

(4) Rated laboratory life of the light source/ballast combination, if the information for the light source has been filed in Appendix B of part 564 of this chapter;

(5) A warning that ballast output voltage presents the potential for severe electrical shock that could lead to permanent injury or death;

(6) Ballast output power in watts and output voltage in rms volts AC or DC; and

(7) The symbol 'DOT'.''

(f) For light sources that use excited gas mixtures as a filament or discharge arc, the ''rated laboratory life'' shall be

determined in accordance with sections 4.3 and 4.9 of SAE Recommended Practice J2009 FEB93 *Forward Discharge Lighting Systems*.

(g) After the force deflection test conducted in accordance with S9, the permanent deflection of the glass envelope shall not exceed 0.13 mm in the direction of the applied force.

S7.8 *Aimability Performance Requirements*.

S7.8.1 (a) Each headlamp or beam contributor that is not visually/optically aimable in accordance with S7.8.5.3 of this standard shall be equipped with fiducial marks, aiming pads, or similar references of sufficient detail and accuracy, for determination of an appropriate vehicle plane to be used with the photometric procedures of SAE J1383 APR85 for correct alignment with the photometer axis when being tested for photometric compliance, and to serve for the aiming reference when the headlamp or beam contributor is installed on a motor vehicle. The fiducial marks, aiming pads, or similar references are protrusions, bubble vials, holes, indentations, ridges, scribed lines, or other readily identifiable marks established and described by the vehicle or headlamp manufacturer.

(b) Each motor vehicle manufactured on and after September 1, 1998, shall be equipped with headlamps or beam contributors which have a mark or markings that are visible from the front of the headlamp when installed on the vehicle to identify the optical axis of the headlamp to assure proper horizontal and vertical alignment of the aiming screen or optical aiming equipment. The manufacturer is free to choose the design of the mark or markings. The mark or markings may be on the interior or exterior of the lens or indicated by a mark or central structure on the interior or exterior of the headlamp.

(c) Each headlamp that is visually/optically aimable in accordance with S7.8.5.3 of this standard shall be marked in accordance with S7.8.5.3(f).

S7.8.2 Except as provided in this paragraph, each headlamp shall be installed on a motor vehicle with a mounting and aiming mechanism that allows aim inspection and adjustment of both vertical and horizontal aim, and is accessible for those purposes without removal of any vehicle parts, except for protective covers removable without the use of tools.

S7.8.2.1 (a) When installed on the vehicle, adjustment of one aim axis through its full on-vehicle range shall not cause the aim of the other axis to deviate more than +/− 0.76 degree.

(b) If the performance specified in paragraph (a) of this section is not achievable, the requirements of S7.8.5.2(b)(3) apply, except that if the aiming mechanism is not a VHAD, the requirements specific to VHADs are not applicable, and the instruction shall be specific to the aiming mechanism installed.

(c) A visually/optically aimable headlamp that has a lower beam shall not have a horizontal adjustment mechanism unless such mechanism meets the requirements of paragraph S7.8.5.2 of this standard.

S7.8.2.2 If the headlamp is aimed by moving the reflector relative to the lens and headlamp housing, or vice versa, it shall:

(a) Allow movement of the headlamp system, when tested in the laboratory, to be not less than the full range of pitch on the vehicle on which the headlamp system is installed and for the horizontal aim range limits of S7.8.4,

(b) Conform with the photometrics applicable to it with the lens at any position relative to the reflector within the range limits as specified in S7.8.2.2(a),

(c) Be exempted from the aim range limits for testing in a laboratory in S7.8.3, and

(d) Be exempted from S7.8.4 if it is visually/optically aimable and has fixed horizontal aim.

S7.8.3 When a headlamp system is tested in a laboratory, the range of its vertical aim shall not be less than +/− 4 degrees from the nominal correct aim position for the intended vehicle application. When installed on a motor vehicle, the range of vertical aim shall be not less than the full range of pitch of the vehicle on which the headlamp system is installed. The installed range of static pitch angle shall as a minimum be determined from unloaded vehicle weight to gross vehicle weight rating,

and incorporate pitch angle effects from maximum trailer or trunk loadings, the full range of tire intermix sizes and suspensions recommended and/or installed by the vehicle manufacturer, and the anticipated effects of variable passenger loading. The vertical aim adjustment mechanism shall be continuously adjustable over the full range.

S7.8.4 When a headlamp system is tested in a laboratory, the range of its horizontal aim shall be not less that +/-2.5 degrees from the nominal correct aim position for the intended vehicle application.

S7.8.5 When activated in a steady-burning state, headlamps shall not have any styling ornament or other feature, such as a translucent cover or grill, in front of the lens. Headlamp wipers may be used in front of the lens provided that the headlamp system is designed to conform with all applicable photometric requirements with the wiper stopped in any position in front of the lens. When a headlamp system is installed on a motor vehicle, it shall be aimable with at least one of the following: An externally applied aiming device, as specified in S7.8.5.1; an on-vehicle headlamp aiming device installed by the vehicle or lamp manufacturer, as specified in S7.8.5.2; or by visual/optical means, as specified in S7.8.5.3.

S7.8.5.1 *External aiming.* Each headlamp system that is capable of being mechanically aimed by externally applied headlamp aiming devices shall be mechanically aimable using the equipment specified in SAE Standard J602 OCT80 *Headlamp Aiming Device for Mechanically Aimable Sealed Beam Headlamp Units* without the removal of any ornamental trim rings, covers, wipers or other vehicle parts.

(a) The aim of the headlamps in each headlamp system, other than a headlamp system designed to conform to section S7.3, that is designed to use such external aiming devices, shall not deviate more than 0.30 degree when a downward torque of 20 lb.-in. (2.25 N–m) is removed from the headlamp in its design operating position. The downward force used to create the torque shall be applied parallel to the aiming reference plane, through the aiming pads, and displaced forward using a lever arm such that the force is applied on an axis that is perpendicular to the aiming reference plane and originates at the center of the aiming pad pattern (see Figures 4–1 and 4–3). For headlamps using the aiming pad locations of Group 1, the distance between the point of application of force and the aiming reference plane shall be not less than 6.625 in. (168.3 mm) plus the distance from the aiming reference plane to the secondary plane, if used (see section S7.8.5.1(d)(1)). For headlamps using the aiming pad locations of Group II, the distance between the point of application of force and the aiming reference plane shall be not less than 6.609 in. (167.9 mm) plus the distance from the aiming reference plane to the secondary plane, if used. For headlamps using the nonadjustable Headlamp Aiming Device Locating Plates for the 146 mm diameter, the 176 mm diameter, and the 92×150 mm sealed beam units, the distance between the point of application of force and the aiming plane shall, respectively, be not less than 6.984 in. (177.4 mm), 6.937 in. (176.2 mm), and 7.625 in (193.7 mm). Each headlamp system that is designed to conform to paragraph S7.5 and that is designed to use such external aiming devices, and which is manufactured on or after September 1, 1990, shall comply with this paragraph.

(b) When a headlamp is installed on a motor vehicle, its aim in any direction shall not change by more than 0.30 degree nor shall the lamp recede more than 0.1 in. (2.5 mm.) after being subjected to an inward force of 50 pounds (222 newtons) applied evenly to the lens parallel to the mechanical axis.

(c) Each headlamp system mounting and aiming mechanism shall be subjected to a salt spray (fog) test in accordance with ASTM B117–73 *Method of Salt Spray (Fog) Testing* for a period of 50 hours, consisting of two successive 25-hour periods of 24 hours exposure followed by 1 hour of drying. At the end of 50 hours, the headlamp system shall be capable of meeting any of the applicable requirements of paragraph S7.8.

(d) Each headlamp system which is designed to use the Headlamp Aiming Device Locating Plates with adjustable legs for the 100 × 165 mm unit and the

142 × 200 mm unit, and which has adjustable length legs, shall meet the requirements of subparagraphs (1) and (2) below.

(1) The lens shall have three aiming pads which meet the requirements of Figure 4, *Dimensional Specifications for Location of Aiming Pads on Replaceable Bulb Headlamp Units*. The aiming pads need not be centered at the geometric center of the lens, or on the optical axis. Except as provided in subparagraph (2), a whole number, which represents the distance in tenths of an inch (i.e. 0.3 inch=3) from the aiming reference plane to the respective aiming pads which are not in contact with that plane, shall be inscribed adjacent to each respective aiming pad on the lens. The height of these numbers shall be not less than .157 inch (4 mm). If there is interference between the plane and the area of the lens between the aiming pads, the whole number represents the distance to a secondary plane. The secondary plane shall be located parallel to the aiming reference plane and as close to the lens as possible without causing interference.

(2) If the most forward aiming pad is the lower inboard aiming pad, then the dimensions may be placed anywhere on the lens. The dimension for the outboard aiming pad (Dimension F in Figure 4) shall be followed by the letter ''H'' and the dimension for the center aiming pad shall be followed by the letter ''V.'' The dimensions shall be expressed in tenths of an inch.

(e) Each headlamp may be designed to use the nonadjustable Headlamp Aiming Device Locating Plate for the 100×165 mm unit, the 142×200 mm unit, the 146 mm diameter unit, or the 178 mm diameter unit of SAE J602, or the 92×150 mm Type F unit, and incorporate lens-mounted aiming pads as specified for those units in Figures 10, 13, 5, or 7 respectively in SAE J1383 APR85, or Figure 11 of this standard for the Type F unit. If so designed, no additional lens marking is necessary to designate the type of plate or dimensions.

S7.8.5.2 *On-vehicle aiming*. Each headlamp system that is capable of being aimed by equipment installed on the vehicle shall include a Vehicle Headlamp Aiming Device (VHAD) that conforms to the following requirements:

(a) *Aim*. The VHAD shall provide for headlamp aim inspection and adjustment in both the vertical and horizontal axes.

(1) *Vertical aim*. The VHAD shall include the necessary references and scales relative to the horizontal plane to assure correct vertical aim for photometry and aiming purposes. An off-vehicle measurement of the angle of the plane of the ground is permitted. In addition, an equal number of graduations from the ''O'' position representing angular changes in the axis in the upward and downward directions shall be provided.

(i) Each graduation shall represent a change in the vertical position of the mechanical axis not larger than 0.19 degree (1 in. at 25 ft.) to provide for variations in aim at least 1.2 degrees above and below the horizontal, and have an accuracy relative to the zero mark of less than 0.1 degree.

(ii) The VHAD shall be marked to indicate headlamp aim movement in the upward and downward directions.

(iii) Each graduation shall indicate a linear movement of the scale indicator of not less than 0.05 in. (1.27 mm) if a direct reading analog indicator is used. If a remote reading indicator is provided, it shall represent the actual aim movement in a clear, understandable format.

(iv) The vertical indicator shall perform through a minimum range of +/−1.2 degrees.

(v) Means shall be provided in the VHAD for compensating for deviations in floor slope less than 1.2 degrees from the horizontal that would affect the correct positioning of the headlamp for vertical aim.

(vi) The graduations shall be legible under an illumination level not greater than 30 foot candles, measured at the top of the graduation, by an observer having 20/20 vision (Snellen), and shall permit aim adjustment to within 0.19 degree (1 in. at 25 ft.).

(2) *Horizontal aim*. The VHAD shall include references and scales relative to the longitudinal axis of the vehicle necessary to assure correct horizontal

aim for photometry and aiming purposes. An ''O'' mark shall be used to indicate alignment of the headlamps relative to the longitudinal axis of the vehicle. In addition, an equal number of graduations from the ''O'' position representing equal angular changes in the axis relative to the vehicle axis shall be provided.

(i) Each graduation shall represent a change in the horizontal position of the mechanical axis not greater than 0.38 degree (2 in. at 25 ft.) to provide for variations in aim at least 0.76 degree (4 in. at 25 ft.) to the left and right of the longitudinal axis of the vehicle, and shall have an accuracy relative to the zero mark of less than 0.1 degree.

(ii) The VHAD shall be marked to indicate headlamp aim movement in the left and right directions.

(iii) The graduations shall be legible under an illumination level not greater than 30 foot candles, measured at the top of the graduation, by an observer having 20/20 vision (Snellen), and shall permit aim adjustment to within 0.38 degree (2 in. at 25 ft.).

(iv) The horizontal indicator shall perform through a minimum range of +/−0.76 degree (4 in. at 25 ft.); however, the indicator itself shall be capable of recalibration over a movement of +/−2.5 degrees relative to the longitudinal axis of the vehicle to accommodate any adjustment necessary for recalibrating the indicator after vehicle repair from accident damage.

(b) *Aiming instructions.* (1) The instructions for properly aiming the headlighting system using the VHAD shall be provided on a label permanently affixed to the vehicle adjacent to the VHAD, or in the vehicle operator's manual. The instructions shall advise that the headlighting system is properly aimed if the appropriate vertical plane (as defined by the vehicle manufacturer) is perpendicular to both the longitudinal axis of the vehicle, and a horizontal plane when the vehicle is on a horizontal surface, and the VHAD is set at ''O'' vertical and ''O'' horizontal.

(2) Should a remote indicator or a remote indicator and adjuster be provided, the instructions shall be placed in the operator's manual, and may also be placed on a label adjacent to the VHAD.

(3) Should the mechanism not meet the requirements of S7.8.2.1, on each motor vehicle manufactured on or after September 1, 1990, a cautionary label shall be placed adjacent to the mechanism stating the caution and including either the reason for the caution or the corrective action necessary. Each such label shall also refer the reader to the vehicle operator's manual for complete instructions. Each such vehicle shall be equipped with an operator's manual containing the complete instructions appropriate for the mechanism installed.

(c) Each headlamp equipped with a VHAD that is manufactured for use on motor vehicles manufactured on or after September 1, 1998, shall be manufactured with its calibration permanently fixed by its manufacturer. Calibration in this case means the process of accurately aligning the geometry of the VHAD devices with the beam pattern for the purposes of compliance with the standard.

(d) *Testing the VHAD.*

(1) The headlamp assembly (the headlamp(s), and the VHAD(s)) shall be mounted on a level goniometer, aligned to a photometer located not less than 60 ft. (18.3 m) from the VHAD assembly. The assembly shall be mechanically aimed using the VHAD in accordance with the manufacturer's instructions as provided with the vehicle on which the VHAD is intended to be used. A ¼ degree reaim is permitted in any direction at any test point to allow for variations in readings between laboratories. The test shall be conducted in accordance with the procedures of paragraphs 4.1 and 4.1.4 of SAE J1383 APR85. Under these conditions the mounted headlamp assembly shall be designed to conform to the photometric requirements appropriate for the headlamp system under test.

(2) When tested in accordance with subsection (1) of this section, with any replacement headlamp unit(s) or light sources intended for use in the system under test, the VHAD and headlamp system shall be designed to conform to the photometric performance requirements appropriate for the system under test.

(3) The same VHAD and associated headlamp(s) (or headlamp assembly) shall be rigidly mounted in a headlamp test fixture and comply with the following laboratory test procedures:

(i) Each graduation on the horizontal and vertical aim scales shall be checked and any variation from the correct aim shall not exceed +/− 0.2 degree, and +/− 0.1 degree respectively.

(ii) With the aiming plane horizontal and vertical and with the scale on the device set at 0, the aimer shall be adjusted before each of the following tests to assure that the indicators are centered at 0.

(A) The VHAD and an unlighted headlamp assembly shall be stabilized at 20 +/− 5 degrees F (−7 +/− 3 degrees C) in a circulating air environmental test chamber. After a period of 30 minutes, when measured at that soak temperature, the variation from correct horizontal of vertical aim shall not exceed +/− 0.2 degree, and +/− 0.1 degree, respectively.

(B) The VHAD, and the headlamp assembly with its highest wattage filament (or combination of filaments intended to be used simultaneously) energized at its design voltage, shall then be stabilized at 100 +/− 5 degrees F (38 +/− 3 degrees C) in a circulating air environmental test chamber. After a period of 30 minutes, when measured at that soak temperature, the variation from correct horizontal and vertical aim shall not exceed +/− 0.2 degree, and +/− 0.1 degree, respectively.

(C) The VHAD and an unlighted headlamp assembly shall then be placed in a circulating air environmental test chamber and exposed to a temperature of 140 +/− 5 degrees F (60 +/− 3 degrees C) for 24 hours, followed by a temperature of −40 +/− 5 degrees F (−40 +/− 3 degrees C) for 24 hours and then permitted to return to room temperature, after which the VHAD and headlamp assembly shall show no damage which would impair its ability to perform as specified herein. The variation from correct horizontal or vertical aim shall not exceed +/− 0.2 degree, and +/− 0.1 degree, respectively.

(D) The VHAD and headlamp assembly shall then be tested according to the corrosion test procedure of paragraph S7.8.5.1(c).

(E) The VHAD and headlamp assembly shall then be tested for photometric compliance as specified in paragraphs S7.8.5.2(c)(1) and (2).

S7.8.5.3 *Visual/optical aiming*. Each visually/optically aimable headlamp shall be designed to conform to the following requirements:

(a) *Vertical aim, lower beam*. Each lower beam headlamp shall have a cutoff in the beam pattern. It may be either on the left side or the right side of the optical axis, but once chosen for a particular headlamp system's design, the side chosen for the cutoff shall not be changed for any headlamps intended to be used as replacements for those system's headlamps.

(1) *Vertical position of cutoff*. The headlamp shall be aimed vertically so that the cutoff is on the left side, at 0.4 degree down from the H–H line, or on the right side, at the H–H line.

(2) *Vertical gradient*. The gradient of the cutoff measured at either 2.5 degrees L or 2.0 degrees R shall be not less than 0.13 based on the procedure of S7.8.5.3, paragraph (a)(5).

(3) *Horizontal position of the cutoff*. The width shall be not less than two degrees, with not less than two degrees of its actual width centered at either 2.5 degrees L, or 2.0 degrees R.

(4) *Maximum inclination of cutoff*. The vertical location of the highest gradient at the ends of the minimum width shall be within +/-0.2 degree of the vertical location of the maximum gradient measured at the appropriate vertical line (at either 2.5 degrees L for a left side cutoff, or 2.0 degrees R for a right side cutoff.)

(5) *Measuring the cutoff parameter*. (i) The headlamp shall be mounted on a fixture which simulates its actual design location on any vehicle for which the headlamp is intended. The fixture, with the headlamp installed shall be attached to the goniometer table in such a way that the fixture alignment axes are coincident with the goniometer axes. The headlamp shall be energized at the specified test voltage.

(ii) The headlamp beam pattern shall be aimed with the cutoff at the H-H axis. There shall be no adjustment,

shimming, or modification of the horizontal axis of the headlamp or test fixture, unless the headlamp is equipped with a VHAD. In this case the VHAD shall be adjusted to zero.

(iii) A vertical scan of the beam pattern shall be conducted for a headlamp with a left side gradient by aligning the goniometer on a vertical line at 2.5 degrees L and scanning from 1.5 degrees U to 1.5 degrees D. For a headlamp with a right side gradient, a vertical scan of the beam pattern shall be conducted by aligning the goniometer on a vertical line at 2.0 degrees R and scanning from 1.5 degrees U to 1.5 degrees D.

(iv) Determine the maximum gradient within the range of the scan by using the formula: $G = \log E(a) - \log E(a+0.1)$, where ''G'' is the gradient, ''E'' is illumination and ''a'' is vertical angular position. The maximum value of the gradient ''G'' determines the vertical angular location of the cutoff. Perform vertical scans at 1.0 degree L and R of the measurement point of the maximum gradient to determine the inclination.

(b) *Horizontal aim, lower beam.* There shall be no adjustment of horizontal aim unless the headlamp is equipped with a horizontal VHAD. If the headlamp has a VHAD, it shall be set to zero.

(c) *Vertical aim, upper beam.* (1) If the upper beam is combined in a headlamp with a lower beam, the vertical aim of the upper beam shall not be changed from the aim set using the procedures of paragraphs S7.8.5.3(a) and (b) used for the lower beam.

(2) If the upper beam is not combined in a headlamp with a lower beam, the vertical aim of the upper beam shall be adjusted so that the maximum beam intensity is located on the H-H axis.

(d) *Horizontal aim, upper beam.* (1) If the upper beam is combined in a headlamp with a lower beam, the horizontal aim of the upper beam shall not be changed from the aim set using the procedures of paragraphs S7.8.5.3 (a) and (b) used for the lower beam.

(2) If the upper beam is not combined in a headlamp with the lower beam and has fixed horizontal aim or has a horizontal VHAD, then the headlamp shall be mounted on a fixture which simulates its actual design location on any vehicle for which the headlamp is intended. The fixture, with the headlamp installed shall be attached to the goniometer table in such a way that the fixture alignment axes are coincident with the goniometer axes. The headlamp shall be energized at 12.8 ± 0.20 mV. There shall be no adjustment, shimming, or modification of the horizontal axis of the headlamp or test fixture, unless the headlamp is equipped with a VHAD. In this case the VHAD shall be adjusted to zero.

(3) If the upper beam is not combined in a headlamp with a lower beam, and it does not have a VHAD, the horizontal aim of the upper beam shall be adjusted so that the maximium beam intensity is located on the V-V axis.

(e) *Photometric Requirements and Measurement.* (1) Instead of being designed to conform to the photometric requirements of Figures 15–1, 17–1, 27–1 or 28–1, a visually/optically aimable headlamp shall be designed to conform to the requirements of Figures 15–2, 17–2, 27–2 or 28–2 when tested in accordance with paragraph (2) and SAE J575 DEC88, with the distance from the photometer to the headlamp no less than 18.3 m.

(2) If the lower beam has a left side cutoff, reaim the headlamp vertically to place the maximum gradient found in paragraph S7.8.5.3 at 0.4 degree below the H-H line. For a headlamp with a lower beam right side cutoff, place the maximum gradient found in paragraph S7.8.5.3 at the H–H line. For an upper beam, the headlamp would already be aimed at the end of the procedure found in paragraph S7.8.5.3. A 0.25 degree reaim is permitted in any direction at any test point.

(f) *Marking*—(1) *Headlamp optical axis mark.* There shall be a mark or markings identifying the optical axis of the headlamp visible from the front of the headlamp when installed on the vehicle, to assure proper horizontal and vertical alignment of the aiming screen or optical aiming equipment with the headlamp being aimed. The manufacturer is free to choose the design of the mark or markings. The mark or markings may be on the interior or exterior of the lens or indicated

by a mark or central structure on the interior or exterior of the headlamp.

(2) *Visual/optical aimability identification marks.* (i) The lens of a lower beam headlamp shall be marked ''VOL'' if the headlamp is intended to be visually/optically aimed using the left side of the lower beam pattern.

(ii) The lens of a lower beam headlamp shall be marked ''VOR'' if the headlamp is intended to be visually/optically aimed using the right side of the lower beam pattern.

(iii) The lens of each sealed beam or integral beam headlamp shall be marked ''VOR'' if the headlamp is of a type that was manufactured before May 1, 1997, and if such headlamp type has been redesigned since then to be visually/optically aimable.

(iv) The lens of a headlamp that is solely an upper beam headlamp and intended to be visually/optically aimed using the upper beam shall be marked ''VO''.

(v) Each letter used in marking according to this paragraph shall be not less than 3 mm. high.

S7.9 *Motorcycles.* Each motorcycle shall be equipped with a headlighting system designed to conform to the following requirements.

S7.9.1 A motorcycle manufactured before September 1, 2000, may be equipped with—

(a) A headlighting system designed to conform to SAE Standard J584 *Motorcycle Headlamps* April 1964, or to SAE Standard J584 April 1964 with the photometric specifications of Figure 32 and the upper beam aimability specifications of paragraph S7.9.3; or

(b) One half of any headlighting system specified in S7.1 through S7.6 which provides both a full upper beam and full lower beam. Where more than one lamp must be used, the lamps shall be mounted vertically, with the lower beam as high as practicable.

S7.9.2 A motorcycle manufactured on or after September 1, 2000, shall be equipped with—

(a) A headlighting system designed to conform to SAE Standard J584 *Motorcycle Headlamps* April 1964 with the photometric specifications of Figure 32 and the upper beam aimability specifications of paragraph S7.9.3; or

(b) A headlighting system that conforms to S7.9.1(b).

S7.9.3 The upper beam of a multiple beam headlamp designed to conform to the photometric requirements of Figure 32 shall be aimed photoelectrically during the photometric test in the manner prescribed in SAE Standard J584 OCT93 *Motorcycle Headlamps.*

S7.9.4 *Motorcycle headlamp modulation system.*

S7.9.4.1 A headlamp on a motorcycle may be wired to modulate either the upper beam or the lower beam from its maximum intensity to a lesser intensity, provided that:

(a) The rate of modulation shall be 240 ± 40 cycles per minute.

(b) The headlamp shall be operated at maximum power for 50 to 70 percent of each cycle.

(c) The lowest intensity at any test point shall be not less than 17 percent of the maximum intensity measured at the same point.

(d) The modulator switch shall be wired in the power lead of the beam filament being modulated and not in the ground side of the circuit.

(e) Means shall be provided so that both the lower beam and upper beam remain operable in the event of a modulator failure.

(f) The system shall include a sensor mounted with the axis of its sensing element perpendicular to a horizontal plane. Headlamp modulation shall cease whenever the level of light emitted by a tungsten filament light operating at 3000° Kelvin is either less than 270 lux (25 foot-candles) of direct light for upward pointing sensors or less than 60 lux (5.6 foot-candles) of reflected light for downward pointing sensors. The light is measured by a silicon cell type light meter that is located at the sensor and pointing in the same direction as the sensor. A Kodak Gray Card (Kodak R–27) is placed at ground level to simulate the road surface in testing downward pointing sensors.

(g) When tested in accordance with the test profile shown in Figure 9, the voltage drop across the modulator when the lamp is on at all test conditions for 12 volt systems and 6 volt systems shall not be greater than .45 volt.

The modulator shall meet all the provisions of the standard after completion of the test profile shown in Figure 9.

(h) Means shall be provided so that both the lower and upper beam function at design voltage when the headlamp control switch is in either the lower or upper beam position when the modulator is off.

S7.9.4.2(a) Each motorcycle headlamp modulator not intended as original equipment, or its container, shall be labeled with the maximum wattage, and the minimum wattage appropriate for its use. Additionally, each such modulator shall comply with S7.9.4.1 (a) through (g) when connected to a headlamp of the maximum rated power and a headlamp of the minimum rated power, and shall provide means so that the modulated beam functions at design voltage when the modulator is off.

(b) Instructions, with a diagram, shall be provided for mounting the light sensor including location on the motorcycle, distance above the road surface, and orientation with respect to the light.

S7.9.5 Each replaceable bulb headlamp that is designed to meet the photometric requirements of paragraph S7.9.1(a) or paragraph S7.9.2(a) and that is equipped with a light source other than a replaceable light source meeting the requirements of paragraph S7.7, shall have the word ''motorcycle'' permanently marked on the lens in characters not less than 0.114 in. (3 mm) in height.

S7.9.6 A headlamp system shall be installed on a motorcycle in accordance with the requirements of this paragraph.

S7.9.6.1 The headlamp system shall be located on the front of the motorcycle.

S7.9.6.2 (a) If the system consists of a single headlamp, it shall be mounted on the vertical centerline of the motorcycle. If the headlamp contains more than one light source, each light source shall be mounted on the vertical centerline with the upper beam no higher than the lower beam, or horizontally disposed about the vertical centerline and mounted at the same height. If the light sources are horizontally disposed about the vertical centerline, the distance between the closest edges of the effective projected luminous lens area in front of the light sources shall not be greater than 200 mm (8 in.).

(b) If the system consists of two headlamps, each of which provides both an upper and lower beam, the headlamps shall be mounted either at the same height and symmetrically disposed about the vertical centerline or mounted on the vertical centerline. If the headlamps are horizontally disposed about the vertical centerline, the distance between the closest edges of their effective projected luminous lens areas shall not be greater than 200 mm (8 in.).

(c) If the system consists of two headlamps, one of which provides an upper beam and one of which provides the lower beam, the headlamps shall be located on the vertical centerline with the upper beam no higher than the lower beam, or horizontally disposed about the vertical centerline and mounted at the same height. If the headlamps are horizontally disposed about the vertical centerline, the distance between the closest edges of their effective projected luminous lens areas shall not be greater than 200 mm (8 in.).

S8 *Tests and Procedures for Integral Beam and Replaceable Bulb Headlighting Systems.* When tested in accordance with the following procedures, each integral beam headlamp shall meet the requirements of paragraph S7.4, and each replaceable bulb headlamp shall meet the requirements of paragraph S7.5. Ballasts required to operate specific gas mixture light sources shall be included in the tests specified in paragraphs S8.1 and S8.4 though S8.7.

S8.1 *Photometry.* Each headlamp to which paragraph S8 applies shall be tested according to paragraphs 4.1 and 4.1.4 of SAE Standard J1383 APR85 for meeting the applicable photometric requirements, after each test specified in paragraphs S8.2, S8.3, S8.5, S8.6.1, S8.6.2, S8.7, and S8.10.1 and S8.10.2, if applicable. A ¼ degree reaim is permitted in any direction at any test point.

S8.2 *Abrasion.* (a) A headlamp shall be mounted in the abrasion test fixture in the manner indicated in Figure 5 with the lens facing upward.

(b) An abrading pad meeting the requirements in paragraphs (c)(1) through (c)(4) of this section shall be cycled back and forth (1 cycle) for 11 cycles at 4 ± 0.8 in. (10 cm ± 2 cm) per second over at least 80 percent of the lens surface, including all the area between the upper and lower aiming pads, but not including lens trim rings and edges.

(c)(1) The abrading pad shall be not less than 1.0 ± .04 in. (2.5 cm ± .1 cm) wide, constructed of 0000 steel wool, and rubber cemented to a rigid base shaped to the same vertical contour of the lens. The ''grain'' of the pad shall be perpendicular to the direction of motion.

(2) The abrading pad support shall be equal in size to the pad and the center of the support surface shall be within ± .08 in. (± 2 mm) of parallel to the lens surface.

(3) The density of the abrading pad shall be such that when the pad is mounted to its support and is resting unweighted on the lens, the base of the pad shall be no closer than .125 in. (3.2 mm) to the lens at its closest point.

(4) When mounted on its support and resting on the lens of the test headlamp, the abrading pad shall then be weighted such that a pad pressure of 2.0 ± .15 psi (14 ± 1 KPa) exists at the center and perpendicular to the face of the lens.

(d) A pivot shall be used if it is required to follow the contour of the lens.

(e) Unused steel wool shall be used for each test.

S8.3 *Chemical resistance.* (a) The entire exterior lens surface of the headlamp in the headlamp test fixture and top surface of the lens-reflector joint shall be wiped once to the left and once to the right with a 6-inch square soft cotton cloth (with pressure equally applied) which has been saturated once in a container with 2 ounces of a test fluid as listed in paragraph (b). The lamp shall be wiped within 5 seconds after removal of the cloth from the test fluid.

(b) The test fluids are:

(1) ASTM Reference Fuel C, which is composed of Isooctane 50% volume and Toluene 50% volume. Isooctane must conform to A2.7 in Annex 2 of the Motor Fuels Section of the *1985 Annual Book of ASTM Standards*, Vol. 05.04, and Toluene must conform to ASTM specification D362–84, *Standard Specification for Industrial Grade Toluene*. ASTM Reference Fuel C must be used as specified in:

(i) Paragraph A2.3.2 and A2.3.3 of Annex 2 to *Motor Fuels, Section 1* in the *1985 Annual Book of ASTM Standards;* and

(ii) OSHA Standard 29 CFR 1910.106—*Handling Storage and Use of Flammable Combustible Liquids*.

(2) Tar remover (consisting by volume of 45% xylene and 55% petroleum base mineral spirits).

(3) Power steering fluid (as specified by the vehicle manufacturer for use in the motor vehicle on which the headlamp is intended to be installed).

(4) Windshield washer fluid consisting of 0.5% monoethanolamine with the remainder 50% concentration of methanol/distilled water by volume.

(5) Antifreeze (50% concentration of ethylene glycol/distilled water by volume).

(c) After the headlamp has been wiped with the test fluid, it shall be stored in its designed operating attitude for 48 hours at a temperature of 73 °F ±7° (23 °C ± 4°) and a relative humidity of 30 ± 10 percent. At the end of the 48-hour period, the headlamp shall be wiped clean with a soft dry cotton cloth and visually inspected.

S8.4 *Corrosion.* (a) A connector test shall be performed on each filament circuit prior to the test in subparagraph (b) according to Figure 1 and SAE Standard J580 DEC86. The power source shall be set to provide 12. 8 volts and the resistance shall be set to produce 10 amperes.

(b) The headlamp with connector attached to the terminals, unfixtured and in its designed operating attitude with all drain holes, breathing devices or other designed openings in their normal operating positions, shall be subjected to a salt spray (fog) test in accordance with ASTM B117–73, *Method of Salt Spray (Fog) Testing,* for 240 hours, consisting of ten successive 24-hour periods. During each period, the headlamp shall be mounted in the middle of the chamber and exposed for 23 hours to the salt spray. The spray shall

not be activated during the 24th hour. The bulb shall be removed from the headlamp and from the test chamber during the one hour of salt spray deactivation and reinserted for the start of the next test period, at the end of the first and last three 23-hour periods of salt spray exposure, and at the end of any two of the fourth through seventh 23-hour periods of salt-spray exposure. The test chamber shall be closed at all times except for a maximum of 2 minutes which is allowed for removal or replacement of a bulb during each period. After the ten periods, the lens reflector unit without the bulb shall be immersed in deionized water for 5 minutes, then secured and allowed to dry by natural convection only.

(c) Using the voltage, resistance and pretest set up of paragraph (a) the current in each filament circuit shall be measured after the test conducted in paragraph (b).

S8.5 *Dust.* The headlamp, mounted on a headlamp test fixture, with all drain holes, breathing devices or other designed openings in their normal operating positions, shall be positioned within a cubical box, with inside measurements of 35.4 in. (900 mm) on each side or larger if required for adequate wall clearance, i.e., a distance of at least 5.9 in. (150 mm) between the headlamp and any wall of the box. The box shall contain 9.9 lb. (4.5 kg) of fine powdered cement which conforms to the ASTM C150–77 specification for Portland Cement. Every 15 minutes, the cement shall be agitated by compressed air or fan blower(s) by projecting blasts of air for a two-second period in a downward direction so that the cement is diffused as uniformly as possible throughout the entire box. This test shall be continued for five hours after which the exterior surfaces of the headlamp shall be wiped clean.

S8.6 *Temperature and internal heat test.* A headlamp with one or more replaceable light sources shall be tested according to paragraphs S8.6.1 and S8.6.2. Tests shall be made with all filaments lighted at design voltage that are intended to be used simultaneously in the headlamp and which in combination draw the highest total wattage. These include but are not limited to filaments used for turn signal lamps, fog lamps, parking lamps, and headlamp lower beams lighted with upper beams when the wiring harness is so connected on the vehicle. If a turn signal is included in the headlamp assembly, it shall be operated at 90 flashes a minute with a 75 ± 2% current ''on time.'' If the lamp produces both the upper and lower beam, it shall be tested in both the upper beam mode and the lower beam mode under the conditions above described, except for a headlamp with a single Types HB1 or HB2 light source.

S8.6.1 *Temperature cycle.* A headlamp, mounted on a headlamp test fixture, shall be subjected to 10 complete consecutive cycles having the thermal cycle profile shown in Figure 6. During the hot cycle, the lamp, shall be energized commencing at point ''A'' of Figure 6 and de-energized at point ''B.'' Separate or single test chambers may be used to generate the environment of Figure 6. All drain holes, breathing devices or other openings or vents of the headlamps shall be in their normal operating positions.

S8.6.2 *Internal Heat Test.* (a) The headlamp lens surface that would normally be exposed to road dirt shall be uniformly sprayed with any appropriate mixture of dust and water or other materials to reduce the photometric output at the H–V test point of the upper beam (or the ½D–1½R test point of the lower beam as appropriate) to 25 ± 2% of the output originally measured in the photometric test conducted pursuant to paragraphs S7.4(i), or S7.5 (a) through (e), as applicable. A headlamp with a single Types HB1 or HB2 light source shall be tested on the upper beam only. Such reduction shall be determined under the same conditions as that of the original photometric measurement.

(b) After the photometric output of the lamp has been reduced as specified in paragraph (a), the lamp and its mounting hardware shall be mounted in an environmental chamber in a manner similar to that indicated in Figure 7 ''Dirt/Ambient Test Setup.'' The headlamp shall be soaked for one hour at a temperature of 95 + 7 −0 degrees F (35 + 4 −0 degrees C) and then the lamp shall be energized according to paragraph S8.6 for one hour in a still air

condition, allowing the temperature to rise from the soak temperature.

(c) The lamp shall be returned to a room ambient temperature of 73 + 7 −0 degrees F (23 + 4 −0 degrees C) and a relative humidity of 30 ± 10% and allowed to stabilize to the room ambient temperature. The lens shall then be cleaned.

S8.7 *Humidity*. (a) The test fixture consists of a horizontal steel plate to which three threaded steel or aluminum rods of ½ inch diameter are screwed vertically behind the headlamp. The headlamp assembly is clamped to the vertical rods, which are behind the headlamp. All attachments to the headlamp assembly are made behind the lens and vents or openings, and are not within 2 inches laterally of a vent inlet or outlet.

(b) The mounted headlamp assembly is oriented in its design operating position, and is placed in a controlled environment at a temperature of 100+7−0 degrees F (38+4−0 degrees C) with a relative humidity of not less than 90 percent. All drain holes, breathing devices, and other openings are in their normal operation positions for all phases of the humidity test. The headlamp shall be subjected to 24 consecutive 3-hour test cycles. In each cycle, it shall be energized for 1 hour at design voltage with the highest combination of filament wattages that are intended to be used, and then de-energized for 2 hours. If the headlamp incorporates a turn signal, it shall flash at 90 flashes per minute with a 75+/−2 percent current ''on-time.''

(c) Within 3 minutes after the completion of the 24th cycle, the air flow test will begin. The following shall occur: the mounted assembly shall be removed, placed in an insulating box and covered with foam material so that there is no visible air space around the assembly; the box shall be closed, taken to the air flow test chamber, and placed within it. Inside the chamber, the assembly with respect to the air flow, shall be oriented in its design operating position. The assembly is positioned in the chamber so that the center of the lens is in the center of the opening of the air flow entry duct during the test. The headlamp has at least 3 inches clearance on all sides, and at least 4 inches to the entry and exit ducts at the closest points. If vent tubes are used which extend below the lamp body, the 3 inches are measured from the bottom of the vent tube or its protection. The temperature of the chamber is 73+7−0 degrees F (23+4−0 degrees C) with a relative humidity of 30+10−0 percent. The headlamp is not energized.

(d) Before the test specified in paragraph (e) of this section, the uniformity of the air flow in the empty test chamber at a plane 4 inches downstream of the air entry duct shall have been measured over a 4-inch square grid. The uniformity of air flow at each grid point is +/−10 percent of the average air flow specified in paragraph (e) of this section.

(e) The mounted assembly in the chamber shall be exposed, for one hour, to an average air flow of 330+0−30 ft/min. as measured with an air velocity measuring probe having an accuracy of +/−3 percent in the 330 ft/min range. The average air flow is the average of the velocity recorded at six points around the perimeter of the lens. The six points are determined as follows: At the center of the lens, construct a horizontal plane. The first two points are located in the plane, 1 inch outward from the intersection of the plane and each edge of the lens. Then, trisect the distance between these two points and construct longitudinal vertical planes at the two intermediate locations formed by the trisection. The four remaining points are located in the vertical planes, one inch above the top edge of the lens, and one inch below the bottom edge of the lens.

(f) After one hour, the headlamp is removed and inspected for moisture.

S8.8 *Vibration*. A vibration test shall be conducted in accordance with the procedures of SAE Standard J575e *Tests for Motor Vehicle Lighting Devices and Components* August 1970, and the following: the table on the adapter plate shall be of sufficient size to completely contain the test fixture base with no overhang. The vibration shall be applied in the vertical axis of the headlamp system as mounted on the vehicle. The filament shall not be energized.

S8.9 *Sealing*. An unfixtured headlamp in its design mounting position shall be placed in water at a temperature of 176 +/− 5 degrees F (60 +/− 3 degrees C) for one hour. The headlamp shall be energized in its highest wattage mode, with the test voltage at 12.8 +/− 0.1 V. during immersion. The lamp shall then be de-energized and immediately submerged in its design mounting position into water at 32 +5 −0 degrees F (0 +3 −0 degrees C). The water shall be in a pressurized vessel, and the pressure shall be increased to 10 psi (70 kPa), upon placing the lamp in the water. The lamp shall remain in the pressurized vessel for a period of thirty minutes. This entire procedure shall be repeated for four cycles. Then the lamp shall be inspected for any signs of water on its interior. During the high temperature portion of the cycles, the lamp shall be observed for signs of air escaping from its interior. If any water occurs on the interior or air escapes, the lamp is not a sealed lamp.

S8.10 *Chemical and corrosion resistance of reflectors of replaceable lens headlamps*.

S8.10.1 *Chemical resistance*. (a) With the headlamp in the headlamp test fixture and the lens removed, the entire surface of the reflector that receives light from a headlamp light source shall be wiped once to the left and once to the right with a 6-inch square soft cotton cloth (with pressure equally applied) which has been saturated once in a container with 2 ounces of one of the test fluids listed in paragraph (b). The lamp shall be wiped within 5 seconds after removal of the cloth from the test fluid.

(b) The test fluids are:

(1) Tar remover (consisting by volume of 45% xylene and 55% petroleum base mineral spirits);

(2) Mineral spirits; or

(3) Fluids other than water contained in the manufacturer's instructions for cleaning the reflector.

(c) After the headlamp has been wiped with the test fluid, it shall be stored in its designed operating attitude for 48 hours at a temperature of 73 °F ± 7° (23 °C ± 4°) and a relative humidity of 30 ± 10 percent. At the end of the 48-hour period, the headlamp shall be wiped clean with a soft dry cotton cloth and visually inspected.

S8.10.2 *Corrosion*. (a) The headlamp with the lens removed, unfixtured and in its designed operating attitude with all drain holes, breathing devices or other designed openings in their normal operating positions, shall be subjected to a salt spray (fog) test in accordance with ASTM B117–73, *Method of Salt Spray (Fog) Testing*, for 24 hours, while mounted in the middle of the chamber.

(b) Afterwards, the headlamp shall be stored in its designed operating attitude for 48 hours at a temperature of 73 °F ± 7° (23 °C ± 4°) and a relative humidity of 30 ± 10 percent and allowed to dry by natural convection only. At the end of the 48-hour period, the reflector shall be cleaned according to the instructions supplied with the headlamp manufacturer's replacement lens, and inspected. The lens and seal shall then be attached according to these instructions and the headlamp tested for photometric performance.

S9. *Deflection test for replaceable light sources*. With the light source rigidly mounted in a fixture in a manner indicated in Figure 8, a force 4.0 ± 0.1 pounds (17.8 ± 0.4N) is applied at a distance ''A'' from the reference plane perpendicular to the longitudinal axis of the glass capsule and parallel to the smallest dimension of the pressed glass capsule seal. The force shall be applied (using a rod with a hard rubber tip with a minimum spherical radius of .039 in (1 mm)) radially to the surface of the glass capsule in four locations in a plane parallel to the reference plane and spaced at a distance ''A'' from that plane. These force applications shall be spaced 90 degrees apart starting at the point perpendicular to the smallest dimension of the pressed seal of the glass capsule. The bulb deflection shall be measured at the glass capsule surface at 180 degrees opposite to the force application. Distance ''A'' for a replaceable light source other than an HB Type shall be the dimension provided in accordance with Appendix A of part 564 of this chapter, section I.A.1 if the light source has a lower beam filament, or as specified in section I.B.1 if the light source has only an upper beam filament.

S10 *Simultaneous Aim Photometry Tests*—(a) *Type F Headlamp Systems.* The assembly shall be located on a goniometer placed not less than 60 feet (18.3m) from the photometer. The LF unit shall be aimed mechanically by centering the unit on the photometer axis and by aligning the aiming plane of the lens perpendicular to the photometer axis. Then the assembly shall be moved in a plane parallel to the established aiming plane of the LF headlamp until the UF headlamp is centered on the photometer axis. Photometry measurements of the UF photometry unit shall be completed using the aiming plane so established, and the procedures of section 4.1 and 4.1.4 Standard J1383 APR85, and Figure 15–1 or Figure 15–2. A reaim tolerance of ±¼ degree is permitted in any direction at any test point.

(b) *Integral Beam Headlamp Systems.* The assembly used for simultaneously aiming more than one integral beam headlamp shall be placed on a test fixture on a goniometer located not less than 60 feet (18.3 m.) from the photometer. The assembly shall be aimed by centering the geometric center of the lower beam lens(es) on the photometer axis and by aligning the photometer axis to be perpendicular to the aiming reference plane or appropriate vertical plane defined by the manufacturer of any lower beam contributor. Photometric compliance of the lower beam shall be determined with all lower beam contributors illuminated and in accordance with sections 4.1 and 4.1.6 of SAE Standard J1383 APR85, and Figure 15–1 or Figure 15–2. The assembly shall then be moved in a plane parallel to the established aiming plane of the lower beam until the assembly is located with the geometric center of the upper lens(es) on the photometer axis. Photometric compliance for upper beam shall now be determined using the figure and procedure specified for the lower beam. During photometric testing, a ¼ degree reaim is permitted in any direction at any test point.

S11. *Photometric Test.* A lamp that is wired in accordance with paragraph S5.5.11 of this standard, shall be tested for compliance with S5.5.11(a)(1) in accordance with the test method specified for photometric testing in SAE Standard J575 DEC88 when a test voltage of 12.8V +/-20 mV is applied to the input terminals of the lamp switch module or voltage-reducing equipment, whichever is closer to the electrical source on the vehicle. The test distance from the lamp to the photometer shall be not less than 18.3 m, if the lamp is optically combined with a headlamp, or is a separate lamp, and not less than 3 m, if the lamp is optically combined with a lamp, other than a headlamp, that is required by this standard.

S12. *Headlamp Concealment Devices.*

S12.1 While the headlamp is illuminated, its fully opened headlamp concealment device shall remain fully opened should any loss of power to or within the headlamp concealment device occur.

S12.2 Whenever any malfunction occurs in a component that controls or conducts power for the actuation of the concealment device, each closed headlamp concealment device shall be capable of being fully opened by a means not requiring the use of any tools. Thereafter, the headlamp concealment device must remain fully opened until intentionally closed.

S12.3 Except for malfunctions covered by S12.2, each headlamp concealment device shall be capable of being fully opened and the headlamps illuminated by actuation of a single switch, lever, or similar mechanism, including a mechanism that is automatically actuated by a change in ambient light conditions.

S12.4 Each headlamp concealment device shall be installed so that the headlamp may be mounted, aimed, and adjusted without removing any component of the device, other than components of the headlamp assembly.

S12.5 Except for cases of malfunction covered by S12.2, each headlamp concealment device shall, within an ambient temperature range of −20 °F. to +120 °F., be capable of being fully opened in not more than 3 seconds after the actuation of a driver-operated control.

S12.6 As an alternative to complying with the requirements of S12.1 through S12.5, a vehicle with headlamps incorporating VHAD or visual/optical aiming in accordance with paragraph S7 may meet the requirements for

Concealable lamps in paragraph 5.14 of the following version of the Economic Commission for Europe Regulation 48 ''Uniform Provisions Concerning the Approval of Vehicles With Regard to the Installation of Lighting and Light-Signalling Devices'': E/ECE/324–E/ECE/TRANS/505, Rev.1/Add.47/Rev.1/Corr.2, 26 February 1996 (page 17), in the English language version. A copy of paragraph 5.14 may be reviewed at the DOT Docket Management Facility, U.S. Department of Transportation, Room PL–01, 400 Seventh Street, SW., Washington, D.C. 20590–0001. Copies of E/ECE/324–E/ECE/TRANS/505, Rev.1/Add.47/Rev.1/Corr.2, 26 February 1996 may be obtained from the ECE internet site:

www.unece.org/trans/main/wp29/wp29regs.html or by writing to:

United Nations, Conference Services Division, Distribution and Sales Section, Office C.115–1, Palais des Nations, CH–1211, Geneva 10, Switzerland.

S12.7 Manufacturers of vehicles with headlamps incorporating VHAD or visual/optical aiming shall elect to certify to S12.1 through S12.5 or to S12.6 prior to, or at the time of certification of the vehicle, pursuant to 49 CFR part 567. The selection is irrevocable.

FIGURES AND TABLES TO § 571.108

FIGURE 1A—REQUIRED PERCENTAGES OF MINIMUM CANDLEPOWER OF FIGURE 1B

Test points (deg)		Turn signal	Stop	Parking	Tail
10U, 10D	5L, 5R	20	20	20	20
5U, 5D	20L, 20R	12.5	12.5	10	15
	10L, 10R	37.5	37.5	20	40
	V	87.5	87.5	70	90
H	10L, 10R	50	50	35	40
	5L, 5R	100	100	90	100
	V	100	100	100	100

Note—Minimum design candlepower requirements are determined by multiplying the percentages given in this Figure by the minimum allowable candlepower values in Figure 1b. The resulting values shall be truncated after one digit to the right of the decimal point.

FIGURE 1B—MINIMUM AND MAXIMUM ALLOWABLE CANDLEPOWER VALUES

Lamp	Lighted sections		
	1	2	3
Stop	80/300	95/360	110/420
Tail [1]	2/18	3.5/20	5.0/25
Parking [2]	4.0/125		
Red turn signal	80/300	95/360	110/420
Yellow turn signal rear	130/750	150/900	175/1050
Yellow turn signal front	200/–	240–	275/–
Yellow turn signal front [3]	500/–	600/–	685/–

[1] Maximum at H or above.
[2] The maximum candlepower value of 125 applies to all test points at H or above. The maximum allowable candlepower value below H is 250.
[3] Values apply when the optical axis (filament center) of the front turn signal is at a spacing less than 4 in. (10 cm.) from the lighted edge of the headlamp unit providing the lower beam, or from the lighted edge of any additional lamp installed as original equipment and which supplements the lower beam.

FIGURE 1C—SUM OF THE PERCENTAGES OF GROUPED MINIMUM CANDLEPOWER

Group and test points	Turn signal	Stop	Parking	Tail
1 10U–5L, 5U–20L, 5D–20L, 10D–5L	65	65	60	70
2 5U–10L, H–10L, 5D–10L	125	125	75	120
3 H–5L, 5U–V, H–V, 5D–V, H–5R	475	475	420	480
4 5U–10R, H–10R, 5D–10R	125	125	75	120
5 10U–5R, 5U–20R, 5D–20R, 10D–5R	65	65	60	70

FIGURE 2—MINIMUM LUMINOUS INTENSITY REQUIREMENTS FOR BACKUP LAMPS

Group	Test point, degrees	Total for group, candela (see note 1)
1[1]	45L–5U, 45L–H, 45L–5D	45
2[1]	30L–H, 30L–5D	50
3	10L–10U, 10L–5U, V–10U, V–5U, 10R–10U, 10R–5U	100
4	10L–H, 10L–5D, V–H, V–5D, 10R–H, 10R–5D	360
5[1]	30R–H, 30R–5D	50

FIGURE 2—MINIMUM LUMINOUS INTENSITY REQUIREMENTS FOR BACKUP LAMPS—Continued

Group	Test point, degrees	Total for group, candela (see note 1)
6[1]	45R–5U, 45R–H, 45R–5D	45

[1] When 2 lamps of the same or symmetrically opposite design are used, the reading along the vertical axis and the averages of the readings for the same angles left and right of vertical for 1 lamp shall be used to determine compliance with the requirements. If 2 lamps of differing designs are used, they shall be tested individually and the values added to determine that the combined units meet twice the candela requirements.

When only 1 backup lamp is used on the vehicle, it shall be tested to twice the candela requirements.

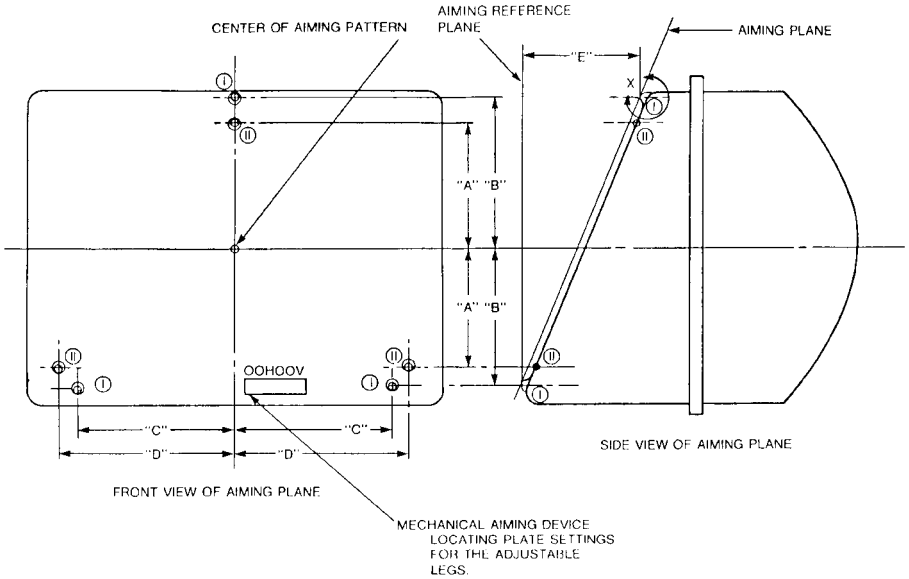

Figure 4-1. Dimensional Specifications for Location of Aiming Pads on Replaceable Bulb Headlamp Units

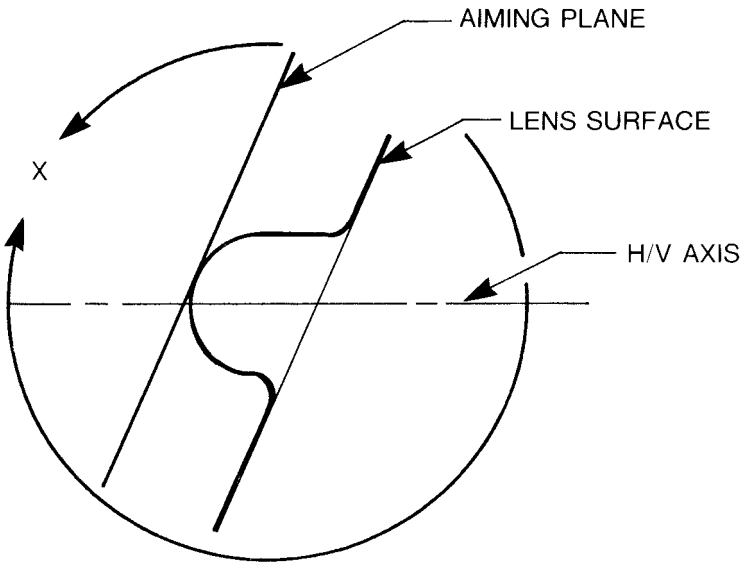

Figure 4–2. Detail Example of Aiming Pad

Figure 4-3

DIMENSIONAL SPECIFICATIONS FOR LOCATION OF AIMING PADS ON REPLACEABLE BULB UNITS

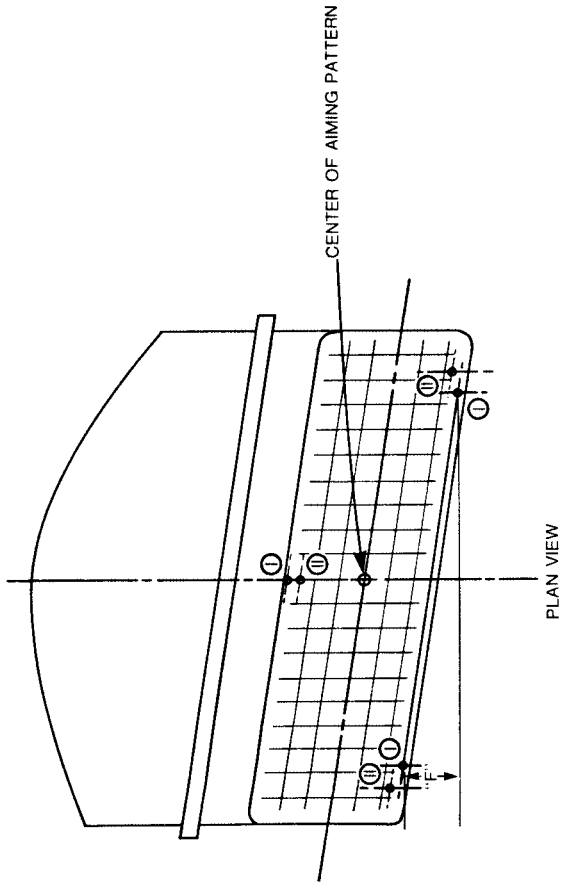

NOTES

- Group I or Group II aiming pad locations may be used.
- Group I aiming pad location (front view) is that prescribed for 2B1 sealed beam units.
- Group II aiming pad location (front view) is that prescribed for 1A1/2A1 sealed beam units.

Figure 4-4

DIMENSIONAL SPECIFICATIONS
FOR LOCATION OF AIMING PADS

ON REPLACEMENT BULB UNITS

Dimension	Millimetres	Inches
A	42.16 ± 0.25	1.660 ± 0.010
B	60.05 ± 1.00	2.364 ± 0.039
C	64.0 ± 1.00	2.520 ± 0.039
D	68.58 ± 0.51	2.700 ± 0.020
E	Mechanical aiming device locating plate setting for the vertical adjustable leg. (Millimeters)	
F	Mechanical aiming device locating plate setting for the horizontal adjustable leg. (Millimeters)	

ABRASION TEST FIXTURE Figure 5

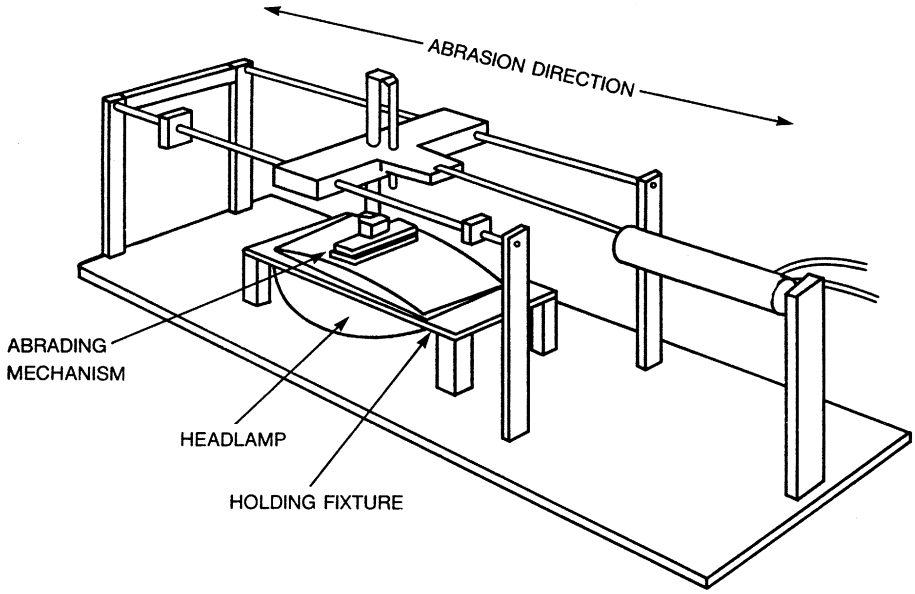

Figure 6

AMBIENT TEMPERATURE TRANSITION RATES:
MINIMUM 0.6°C (1°F) PER MINUTE
MAXIMUM 4°C (8°F) PER MINUTE

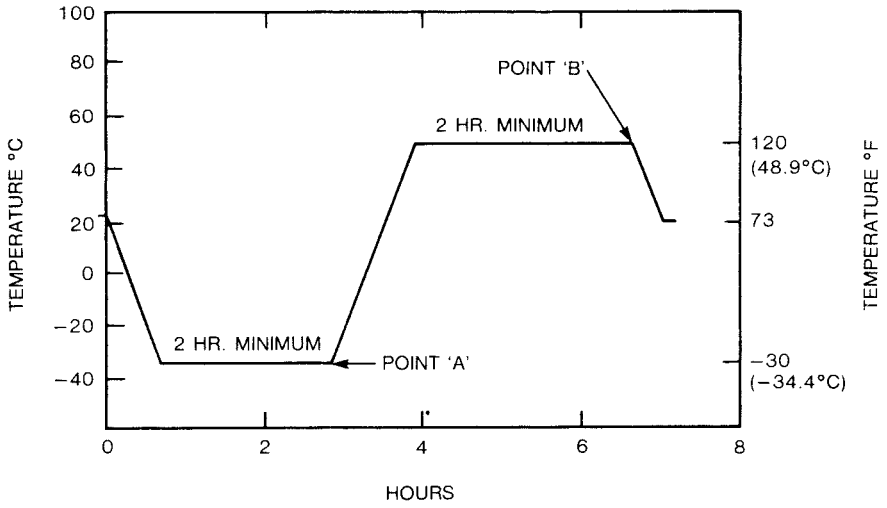

Note: Ambient Conditions 73°F ± 7°(23°C ± 4) and 30 ± 10% RH.

- THERMAL CYCLE PROFILE

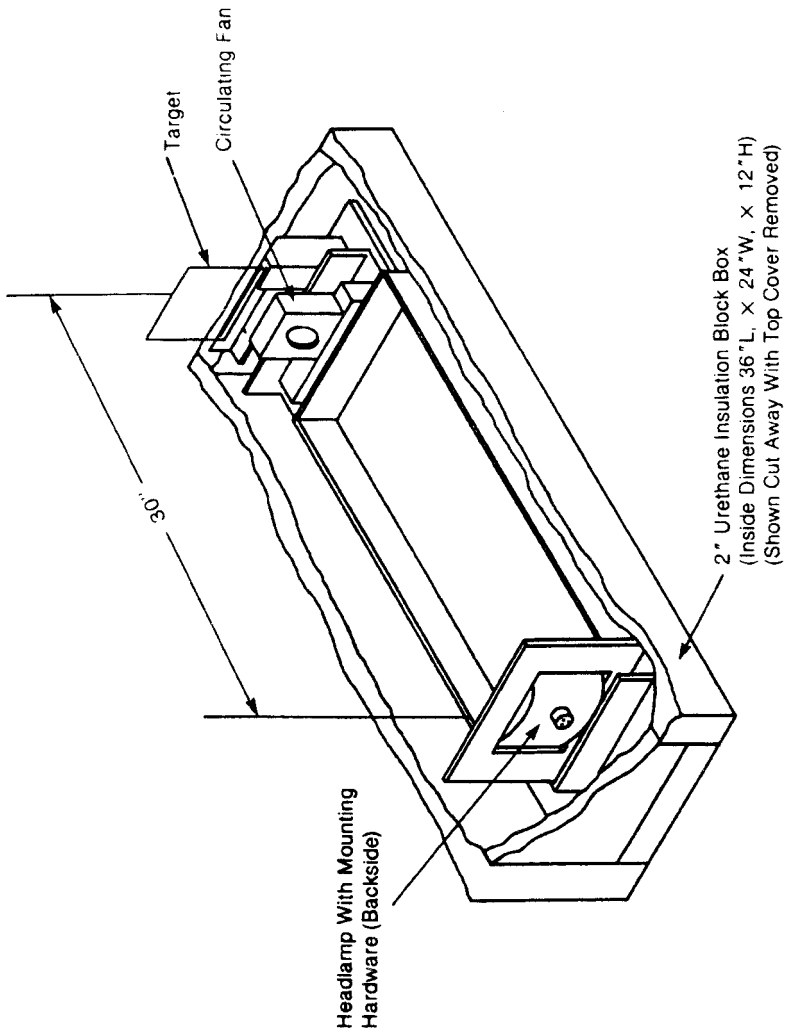

Figure 7. Dirt/Ambient Test Setup

FIGURE 8 - BULB DEFLECTION TEST

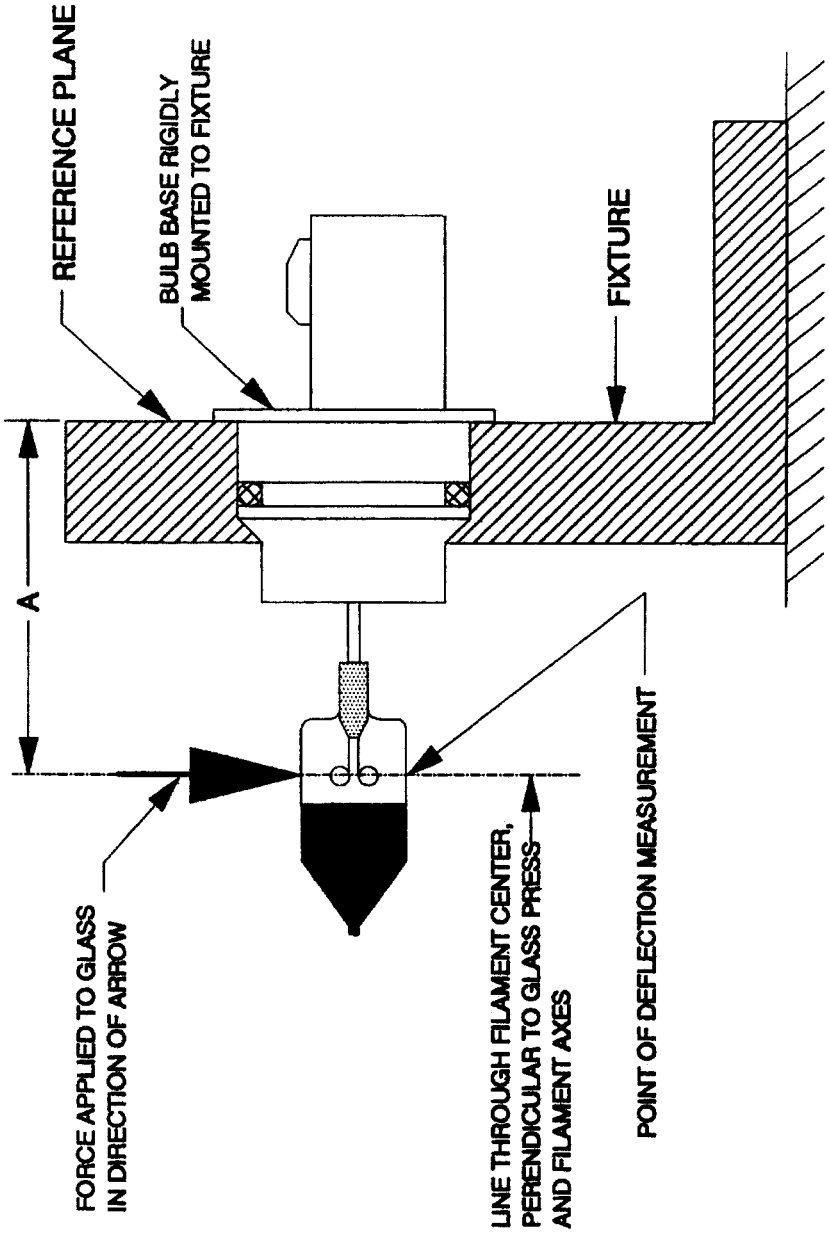

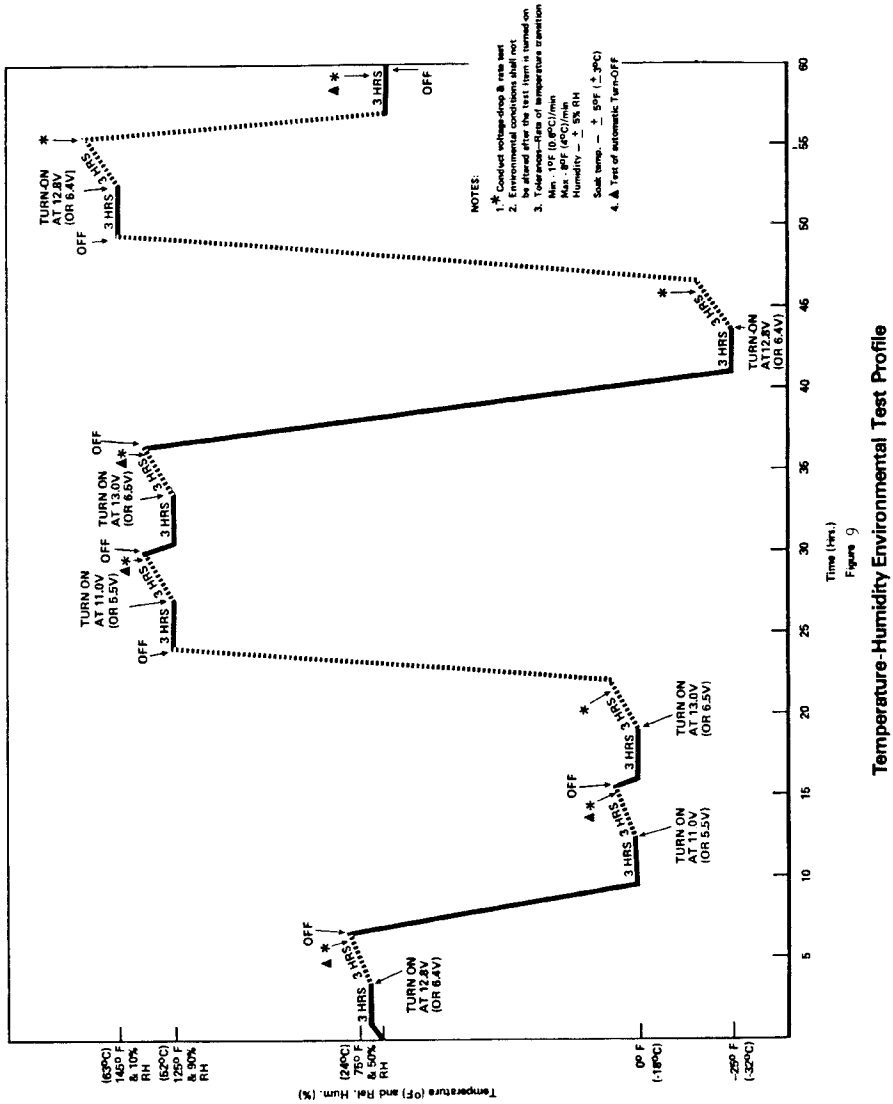

Figure 9

Temperature-Humidity Environmental Test Profile

FIGURE 10—PHOTOMETRIC REQUIREMENTS FOR CENTER HIGH-MOUNTED STOP LAMPS

Individual test points	Minimum intensity (candela)	Zones (test points within zones, see note 2)	Minimum total for zone (canadela)
10U–10L	8	Zone I (5U–V, H–5L, H–V, H–5R, 5D–V)	125
–V	16		
–10R	8		
5U–10L	16	Zone II (5U–5R, 5U–10R, H–10R, 5D–10R, 5D–5R)	98
–5L	25		
–V	25		
–5R	25		

FIGURE 10—PHOTOMETRIC REQUIREMENTS FOR CENTER HIGH-MOUNTED STOP LAMPS—Continued

Individual test points	Minimum intensity (candela)	Zones (test points within zones, see note 2)	Minimum total for zone (canadela)
–10R	16		
5D–10L	16	Zone III (5U–5L, 5U–10L, H–10L, 5D–10L, 5D–5L)	98
–5L	25		
–V	25		
–5R	25		
–10R	16		
H–10L	16	Zone IV (10U–10L, 10U–V, 10U–10R)	32
–5L	25		
–V	25		
–5R	25		
–10R	16		
See Note 1	[1] 160		

Note 1: The listed maximum shall not occur over any area larger than that generated by a ¼ degree radius within an solid cone angle within the rectangle bounded by test points 10U–10L, 10U–10R, 5D–10L, and 5D–10R.

Note 2: The measured values at each test point shall not be less than 60% of the value listed.

[1] Maximum intensity (Candela).

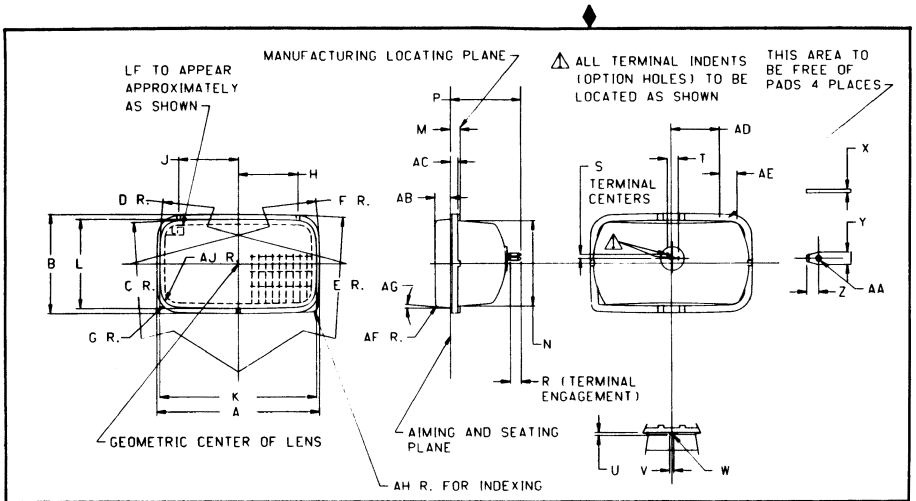

LETTER	INCH	MM	LETTER	INCH	MM
A	5.93 +.050 −.040	150.50 +1.20 −1.00	R	.41 MIN.	10.5 MIN.
B	3.64 +.050 −.040	92.50 +1.20 −1.00	S	.15 ± .010	3.8 ± 0.30
C	63.0 ± 3.94	1600.0 ± 100.0	T	.41 ± .010	10.43 ± 0.30
D	23.6 ± 1.97	600.0 ± 50.0	U	.024 MIN.	0.60 MIN.
E	63.0 ± 3.94	1600.0 ± 100.0	V	.315 MAX.	8.0 MAX.
F	23.8 ± 1.97	600.0 ± 50.0	W	RADIUS	RADIUS
G	.787 ± .010	20.00 ± 0.30	X	.032 ± .002	0.82 ± 0.04
H	2.16 ± .010	55.0 ± 0.30	Y	.110 ± .004	2.80 ± 0.10
J	2.16 ± .010	55.0 ± 0.30	Z	104 ± .010	2.65 ± 0.30
K	5.689 +.008 −.040	144.50 +0.20 −1.00	AA	.051 ± .010 DIA.	1.30 ± 0.30 DIA.
L	3.252 +.008 −.040	82.60 +0.20 −1.00	AB	.56 ± .020	14.3 ± 0.50
M	.46 MAX.	11.7 MAX.	AC	.295 MAX.	7.50 MAX.
N	3.19 MAX.	81.0 MAX.	AD	1.77	45.0
P	2.87 MAX.	73.0 MAX.	AE	.63	16.0
			AF	.13 ± .02	3.2 ± 0.5
			AG	5° ± 1°	5° ± 1°
			AH	.24 ± .02	6.0 ± 0.5
			AJ	63 MIN.	16.0 MIN.

FIG. 11 - TYPE LF RECTANGULAR SEALED BEAM HEADLAMP UNIT

GL-178A GAF

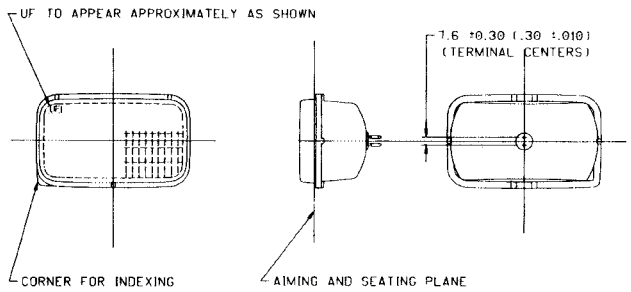

NOTE: SAME AS TYPE LF EXCEPT AS SHOWN
(.XX) INCH DIM.

FIG. 12 - TYPE UF

RECTANGULAR SEALED BEAM HEADLAMP UNIT

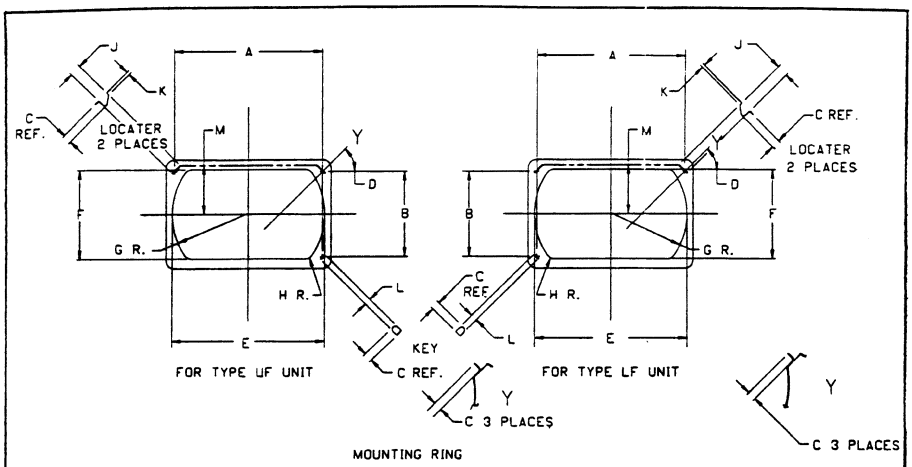

LETTER	INCH	MM
A	5.433 $^{+.012}_{-.000}$	138.00 $^{+0.30}_{-0.00}$
B	3.150 $^{+.012}_{-.000}$	80.00 $^{+0.30}_{-0.00}$
C	.315 ± .02	8.0 ± 0.5
D	45° 3 PLACES	45° 3 PLACES
E	5.63 ± .010	143.0 ± 0.30
F	3.307 ± .010	84.00 ± 0.30
G	2.79 ± .12	71.0 ± 3.0
H	.32 ± .04	8.0 ± 1.0
J	.39 ± .04	10.0 ± 1.0
K	.17 ± .07	4.3 ± 1.7
L	.24 ± .04	6.0 ± 1.0
M	1.823 ± .013	46.30 ± 0.30

FIG. 13 - FRONT VIEW OF KEYS OR LOCATORS FOR TYPE LF AND UF

RECTANGULAR SEALED BEAM HEADLAMP UNIT MOUNTING RINGS

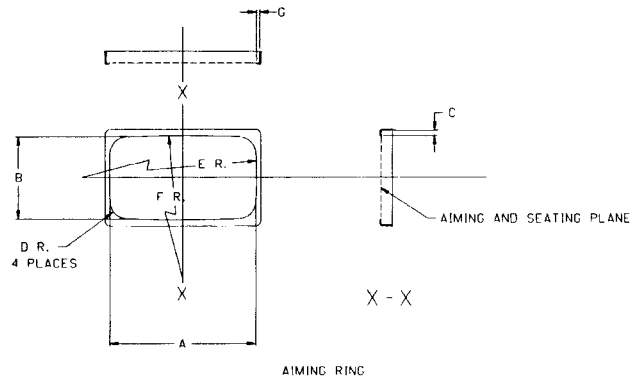

LETTER	INCH	MM
A	5.721 ± .006	145.30 ± 0.30
B	3.284 ± .006	83.40 ± 0.30
C	.213 MIN.	5.40 MIN.
D	.670 MAX.	17.00 MAX.
E	23.7 ± 2.0	602.2 ± 50.0
F	63.0 ± 3.93	1600.0 ± 100.0
G	.134 MIN.	3.40 MIN.

FIG. 14 - AIMING/SEATING RING
FOR TYPE LF AND UF RECTANGULAR SEALED
BEAM HEADLAMP UNITS

GL-176A GHY

FIGURE 15-1

PHOTOMETRIC TEST POINT VALUES

FOR MECHANICAL AIM HEADLIGHTING SYSTEMS

UPPER BEAM

Test Points (degrees)	Candela maximum	Candela minimum
2U-V	--	1,500
1U-3L and 3R	--	5,000
H-V	70,000	40,000
H-3L and 3R	--	15,000
H-6L and 6R	--	5,000
H-9L and 9R	--	3,000
H-12L and 12R	--	1,500
1.5D-V	--	5,000
1.5D-9L and 9R	--	2,000
2.5D-V	--	2,500
2.5D-12L and 12R	--	1,000
4D-V	5,000	--

LOWER BEAM

Test Points (degrees)	Candela maximum	Candela minimum
10U-90U	125	--
4U-8L and 8R	--	64
2U-4L	--	135
1.5U-1R to 3R	--	200
1.5U-1R to R	1,400	--
1U-1.5L to L	700	--
0.5U-1.5L to L	1,000	--
0.5U-1R to 3R	2,700	500
H-4L	--	135
H-8L	--	64
0.5D-1.5L to L	3,000	--
0.5D-1.5R	20,000	10,000
1D-6L	--	1,000
1.5D-2R	--	15,000
1.5D-9L and 9R	--	1,000
2D-15L and 15R	--	850
4D-4R	12,500	--
4D-V	7,000	--
H-V	5,000	--

FIGURE 15-2

PHOTOMETRIC TEST POINT VALUES

FOR VISUAL/OPTICAL AIM HEADLIGHTING SYSTEMS

UPPER BEAM

Test Points (degrees)	Candela maximum	Candela minimum
2U-V	--	1,500
1U-3L and 3R	--	5,000
H-V	70,000	40,000
H-3L and 3R	--	15,000
H-6L and 6R	--	5,000
H-9L and 9R	--	3,000
H-12L and 12R	--	1,500
1.5D-V	--	5,000
1.5D-9L and 9R	--	2,000
2.5D-V	--	2,500
2.5D-12L and 12R	--	1,000
4D-V	5,000	--

LOWER BEAM

Test Points (degrees)	Candela maximum	Candela minimum
10U-90U	125	--
4U-8L and 8R	--	64
2U-4L	--	135
1.5U-1R to 3R	--	200
1.5U-1R to R	1,400	--
1U-1.5L to L	700	--
0.5U-1.5L to L	1,000	--
0.5U-1R to 3R	2,700	500
H-V	5,000	--
H-4L	--	135
H-8L	--	64
0.6D-1.3R	--	10,000
0.86D-V	--	4,500
0.86D-3.5L	12,000	1,800
1.5D-2R	--	15,000
2D-9L and 9R	--	1,250
2D-15L and 15R	--	1,000
4D-V	10,000	--
4D-4R	12,500	--
4D-20L and 20R	--	300

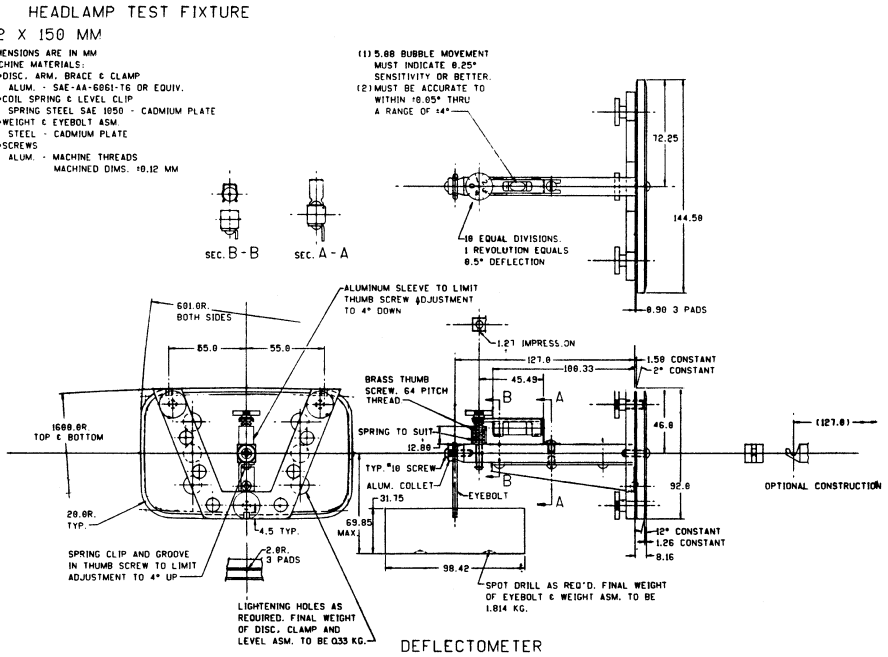
HEADLAMP TEST FIXTURE
92 X 150 MM
DIMENSIONS ARE IN MM
MACHINE MATERIALS:
•DISC, ARM, BRACE & CLAMP
ALUM. - SAE-AA-6061-T6 OR EQUIV.
•COIL SPRING & LEVEL CLIP
SPRING STEEL SAE 1050 - CADMIUM PLATE
•WEIGHT & EYEBOLT ASM.
STEEL - CADMIUM PLATE
•SCREWS
ALUM. - MACHINE THREADS
MACHINED DIMS. ±0.12 MM
(1) 5.08 BUBBLE MOVEMENT MUST INDICATE 0.25° SENSITIVITY OR BETTER.
(2) MUST BE ACCURATE TO WITHIN ±0.05° THRU A RANGE OF ±4°
72.25
144.50
10 EQUAL DIVISIONS. 1 REVOLUTION EQUALS 0.5° DEFLECTION
8.90 3 PADS
SEC. B-B
SEC. A-A
ALUMINUM SLEEVE TO LIMIT THUMB SCREW ADJUSTMENT TO 4° DOWN
601.0R. BOTH SIDES
65.0
55.0
1.27 IMPRESSION
127.0
100.33
45.49
1.50 CONSTANT
2° CONSTANT
BRASS THUMB SCREW, 64 PITCH THREAD
B
A
46.0
1600.0R TOP & BOTTOM
SPRING TO SUIT
12.80
TYP. #10 SCREW
ALUM. COLLET
EYEBOLT
31.75
(127.0)
OPTIONAL CONSTRUCTION
92.0
20.0R. TYP.
4.5 TYP.
69.85 MAX.
12° CONSTANT
1.26 CONSTANT
8.16
SPRING CLIP AND GROOVE IN THUMB SCREW TO LIMIT ADJUSTMENT TO 4° UP
2.0R. 3 PADS
98.42
SPOT DRILL AS REQ'D. FINAL WEIGHT OF EYEBOLT & WEIGHT ASM. TO BE 1.814 KG.
LIGHTENING HOLES AS REQUIRED. FINAL WEIGHT OF DISC, CLAMP AND LEVEL ASM. TO BE 0.33 KG.
DEFLECTOMETER

FIG.-16

FIGURE 17-1

PHOTOMETRIC TEST POINT VALUES

FOR MECHANICAL AIM HEADLIGHTING SYSTEMS

UPPER BEAM

Test Points (degrees)	Candela maximum	Candela minimum
2U-V	--	1,500
1U-3L and 3R	--	5,000
H-V	75,000	40,000
H-3L and 3R	--	15,000
H-6L and 6R	--	5,000
H-9L and 9R	--	3,000
H-12L and 12R	--	1,500
1.5D-V	--	5,000
1.5D-9L and 9R	--	2,000
2.5D-V	--	2,500
2.5D-12L and 12R	--	1,000
4D-V	12,000	--

LOWER BEAM

Test Points (degrees)	Candela maximum	Candela minimum
10U-90U	125	--
4U-8L and 8R	--	64
2U-4L	--	135
1.5U-1R to 3R	--	200
1.5U-1R to R	1,400	--
1U-1.5L to L	700	--
0.5U-1.5L to L	1,000	--
0.5U-1R to 3R	2,700	500
H-4L	--	135
H-8L	--	64
0.5D-10.5L to L	3,000	--
0.5D-1.5R	20,000	10,000
1D-6L	--	1,000
1.5D-2R	--	15,000
1.5D-9L and 9R	--	1,000
2D-15L and 15R	--	850
4D-4R	12,500	--

FIGURE 17-2

PHOTOMETRIC TEST POINT VALUES

FOR VISUAL/OPTICAL AIM HEADLIGHTING SYSTEMS

UPPER BEAM

Test Points (degrees)	Candela maximum	Candela minimum
2U-V	--	1,500
1U-3L and 3R	--	5,000
H-V	75,000	40,000
H-3L and 3R	--	15,000
H-6L and 6R	--	5,000
H-9L and 9R	--	3,000
H-12L and 12R	--	1,500
1.5D-V	--	5,000
1.5D-9L and 9R	--	2,000
2.5D-V	--	2,500
2.5D-12L and 12R	--	1,000
4D-V	12,000	--

LOWER BEAM

Test Points (degrees)	Candela maximum	Candela minimum
10U-90U	125	--
4U-8L and 8R	--	64
2U-4L	--	135
1.5U-1R to 3R	--	200
1.5U-1R to R	1,400	--
1U-1.5L to L	700	--
0.5U-1.5L to L	1,000	--
0.5U-1R to 3R	2,700	500
H-4L	--	135
H-8L	--	64
0.6D-1.3R	--	10,000
0.86D-V	--	4,500
0.86D-3.5L	12,000	1800
1.5D-2R	--	15,000
2D-9L and 9R	--	1,250
2D-15L and 15R	--	1,000
4D-4R	12,500	--
4D-20L and 20R	--	300

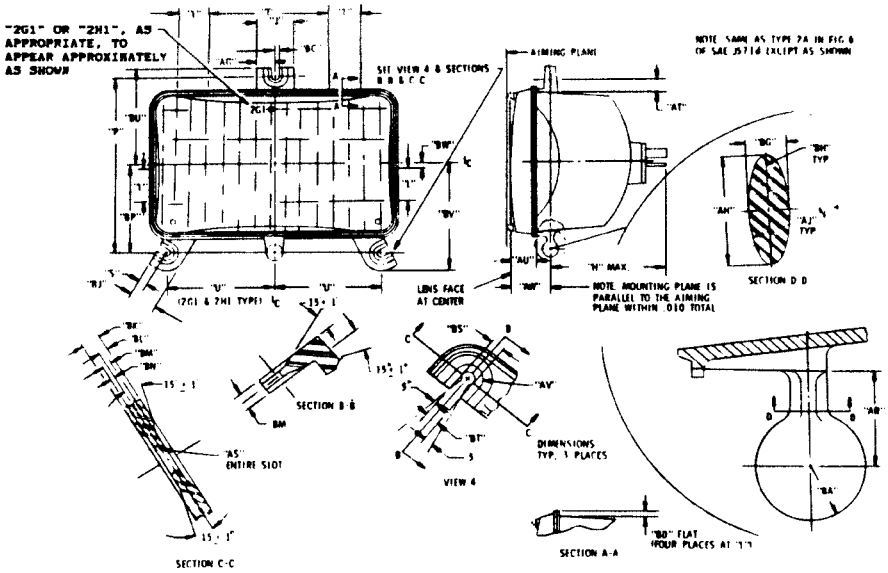

LETTER	IN	mm	LETTER	IN	mm
H MAX	3.499 ± 0.015	88.868 ± 0.381	BA	0.220 SPHER.R	5.59 SPHER.R
J	1.00 ± 0.015	25.40 ± 0.381	BC	0.197 ± 0.005	5.004 ± 0.127
L	1.25 MIN	31.75	BD	0.040 MIN	1.016 MIN
P	4.80 ± 0.076	121.92 ± 0.660	BG	0.150 ± 0.010	3.81 ± 0.254
S	0.250 ± 0.005	6.35 ± 0.127	BH	0.032R	0.813R
T	2.26 ± 0.01	57.40 ± 0.25	BJ	0.720 ± 0.015	18.288 ± 0.381
U	2.82 ± 0.015	71.63 ± 0.381	BK	0.125 ± 0.005	3.175 ± 0.127
AC	0.500 ± 0.01	12.70 ± 0.25	BL	0.062 ± 0.005	1.575 ± 0.127
AH	0.410 ± 0.010	10.414 ± 0.254	BM	0.064 ± 0.004	1.62 ± 0.107
AJ	0.42 ± 0.010	10.668 ± 0.254	BN	0.032 ± 0.004	0.813 ± 0.102
AR	0.37 MIN	9.40 MIN	BP	2.45 ± 0.015	62.23 ± 0.381
AS	0.058 + 0.0, -0.01	0.76R + 0.0, -0.76	BS	0.178, 0.181 DIA	4.521, 4.597 DIA
AT	0.230 MIN	5.84 MIN	BT	0.174, 0.176	4.420, 4.470
AU	0.66 ± 0.040	16.76 ± 1.02	BU	2.75 ± 0.015	69.347 ± 0.381
AV	0.20 ± 0.01R	5.08 ± 0.254	BV	2.980 ± 0.015	75.692 ± 0.381
AW	1.100 ± 0.040	27.94 ± 1.02	BW	0.160 ± 0.01	4.06 ± 0.25

Fig. 18 - Dimensional Specifications for Integral Mount Sealed Beam Headlamps, Types G and H

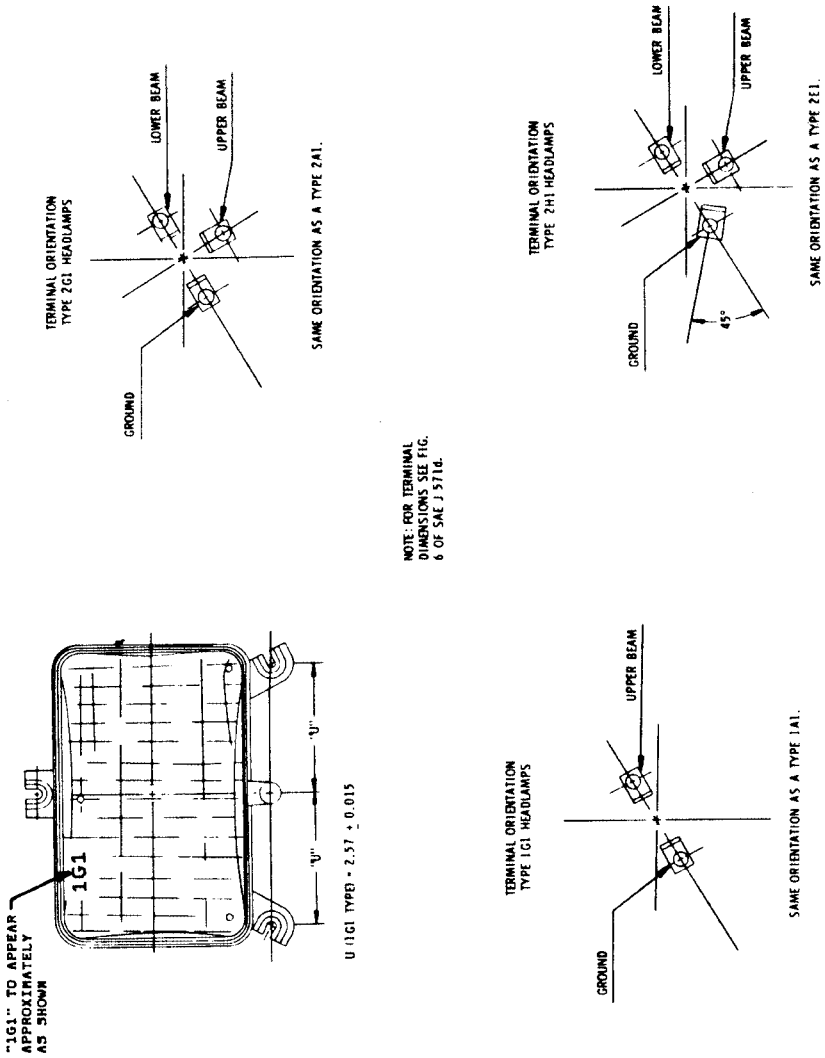

Fig. 21 - Non-Interchangeability Configurations for Integral Mount Sealed Beam Headlamps, Types G and H

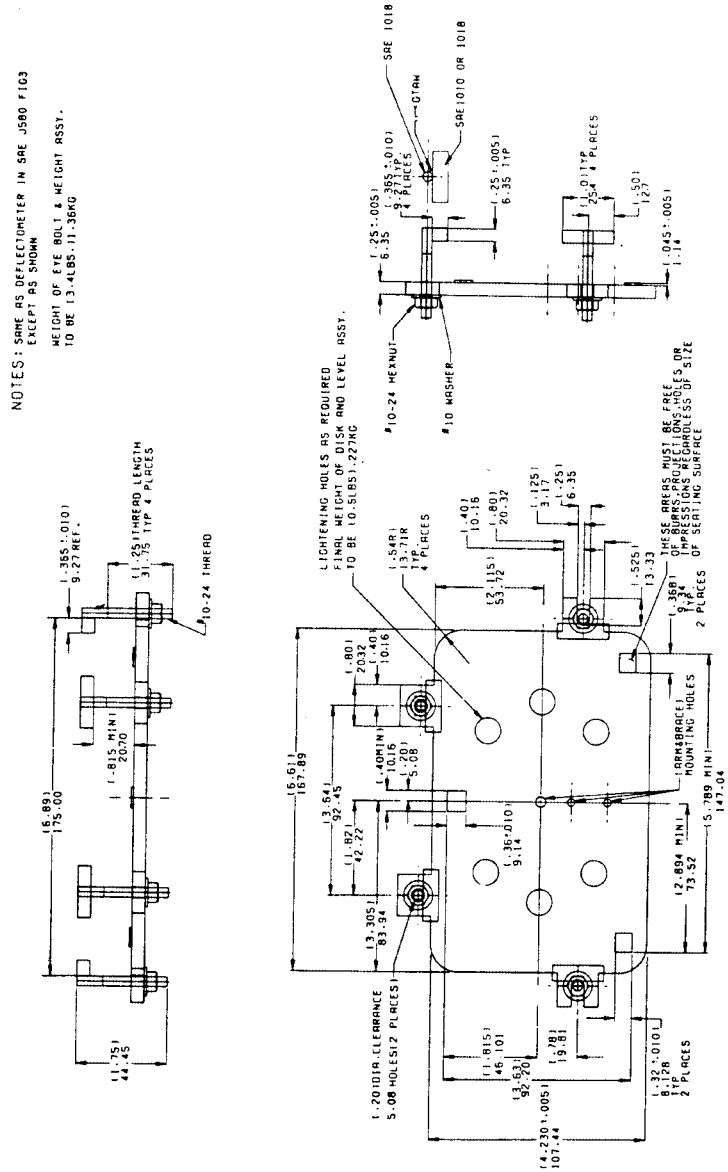

Fig 22 - Deflectometer Adaptor for Torque Deflection Tests on Type G and H Headlamp Systems

FIGURE 25 - PRESSURE CHAMBER

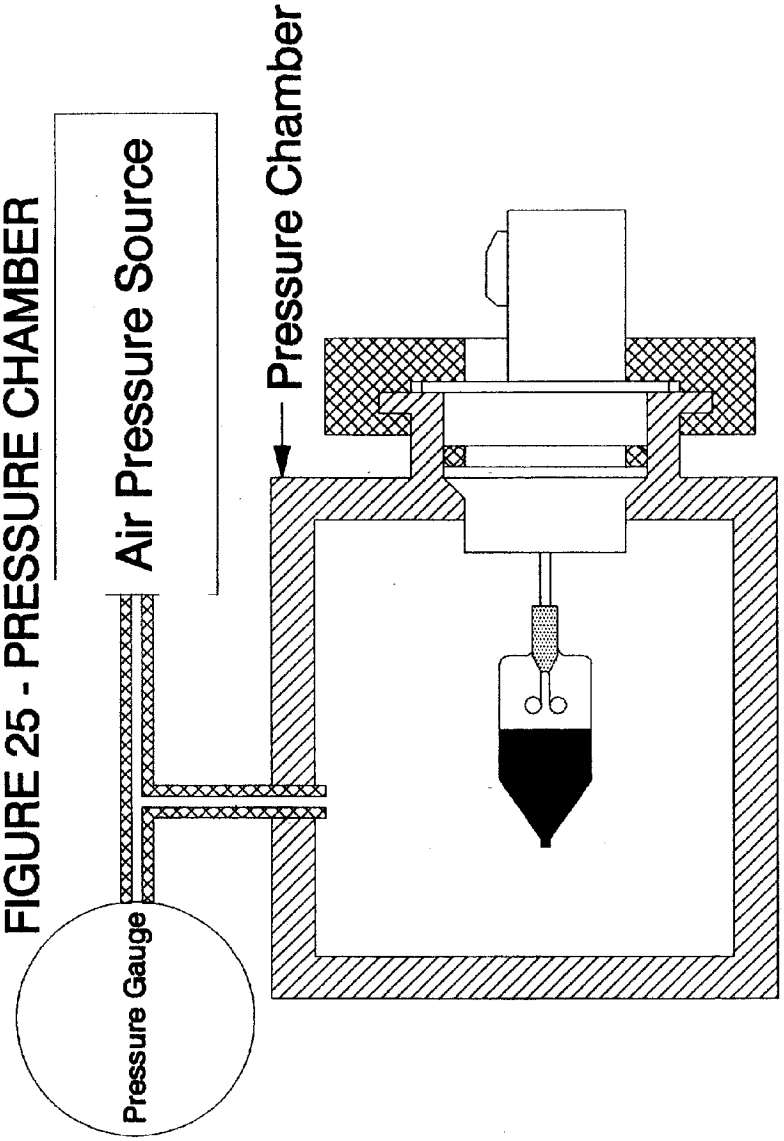

Aperture in pressure chamber for light source made to dimensions listed for aperture for light source in response to Part 564.5(a).

FIGURE 26

TABLE FOR DETERMINING THE PHOTOMETRIC REQUIREMENTS OF REPLACEABLE BULB HEADLAMP SYSTEMS

	Any dual filament type other than HB2 used alone or with another dual filament type other than HB2, filed in Docket No. 93-11	HB2 or any single filament type used alone or with any other single or dual filament type, filed in Docket No. 93-11
Four-Headlamp Systems	Fig. 27-1 or 27-2 Fig. 15-1 or 15-2	Fig. 15-1 or 15-2
Two-Headlamp Systems	Fig. 27-1 or 27-2 Fig. 17-1 or 17-2	Fig. 17-1 or 17-2

FIGURE 27-1

PHOTOMETRIC TEST POINT VALUES

FOR MECHANICAL AIM HEADLIGHTING SYSTEMS

UPPER BEAM

Test Points (degrees)	Candela maximum	Candela minimum
2U-V	--	1,000
1U-3L and 3R	--	2,000
H-V	75,000	20,000
H-3L and 3R	--	10,000
H-6L and 6R	--	3,250
H-9L and 9R	--	1,500
H-12L and 12R	--	750
1.5D-V	--	5,000
1.5D-9L and 9R	--	1,500
2.5D-V	--	2,500
2.5D-12L and 12R	--	750
4D-V	5,000	--

LOWER BEAM

Test Points (degrees)	Candela maximum	Candela minimum
10U-90U	125	--
4U-8L and 8R	--	64
2U-4L	--	135
1.5U-1R to 3R	--	200
1.5U-1R to R	1,400	--
1U-1.5L to L	700	--
0.5U-1.5L to L	1,000	--
0.5U-1R to 3R	2,700	500
H-4L	--	135
H-8L	--	64
0.5D-1.5L toL	2,500	--
0.5D-1.5R	20,000	8,000
1D-6L	--	750
1.5D-2R	--	15,000
1.5D-9L and 9R	--	750
2D-15L and 15R	--	700
4D-4R	12,500	--

FIGURE 27-2

PHOTOMETRIC TEST POINT VALUES

FOR VISUAL/OPTICAL AIM HEADLIGHTING SYSTEMS

UPPER BEAM

Test Points (degrees)	Candela maximum	Candela minimum
2U-V	--	1,000
1U-3L and 3R	--	2,000
H-V	75,000	20,000
H-3L and 3R	--	10,000
H-6L and 6R	--	3,250
H-9L and 9R	--	1,500
H-12L and 12R	--	750
1.5D-V	--	5,000
1.5D-9L and 9R	--	1,500
2.5D-V	--	2,500
2.5D-12L and 12R	--	750
4D-V	5,000	--

LOWER BEAM

Test Points (degrees)	Candela maximum	Candela minimum
10U-90U	125	--
4U-8L and 8R	--	64
2U-4L	--	135
1.5U-1R to 3R	--	200
1.5U-1R to R	1,400	--
1U-1.5L to L	700	--
0.5U-1.5L to L	1,000	--
0.5U-1R to 3R	2,700	500
H-4L	--	135
H-8L	--	64
0.6D-1.3R	--	10,000
0.86D-V	--	4,500
0.86D-3.5L	12,000	1,800
1.5D-2R	--	15,000
2D-9L and 9R	--	1,250
2D-15L and 15R	--	1,000
4D-4R	12,500	--
4D-20L and 20R	--	300

FIGURE 28-1

PHOTOMETRIC TEST POINT VALUES

FOR MECHANICAL AIM HEADLIGHTING SYSTEMS

UPPER BEAM

Headlamp Type	1A1, 1C1, and 1G1		2A1, 2C1, and 2G1	
Test Points (degrees)	Candela maximum	Candela minimum	Candela maximum	Candela minimum
2U-V	--	750	--	750
1U-3L and 3R	--	3,000	--	2,000
H-V	60,000	18,000	15,000	7,000
H-3L and 3R	--	12,000	--	3,000
H-6L and 6R	--	3,000	--	2,000
H-9L and 9R	--	2,000	--	1,000
H-12L and 12R	--	750	--	750
1.5D-V	--	3,000	--	2,000
1.5D-9L and 9R	--	1,250	--	750
2.5D-V	--	1,500	--	1,000
2.5D-12L and 12R	--	600	--	400
4D-V	5,000	--	2,500	--

LOWER BEAM

Headlamp Type	2A1, 2C1, and 2G1	
Test Points (degrees)	Candela maximum	Candela minimum
10U-90U	125	--
4U-8L and 8R	--	64
2U-4L	--	135
1.5U-1R to 3R	--	200
1.5U-1R to R	1,400	--
1U-1.5L to L	700	--
0.5U-1.5L to L	1,000	--
0.5U-1R to 3R	2,700	500
H-4L	--	135
H-8L	--	64
0.5D-1.5L to L	2,500	--
0.5D-1.5R	20,000	8,000
1D-6L	--	750
1.5D-2R	--	15,000
1.5D-9L and 9R	--	750
2D-15L and 15R	--	700
4D-4R	12,500	--

FIGURE 28-2

PHOTOMETRIC TEST POINT VALUES

FOR VISUAL/OPTICAL AIM HEADLIGHTING SYSTEMS

UPPER BEAM

Headlamp Type	1A1, 1C1, and	1G1	2A1, 2C1, and	2G1
Test Points (degrees)	Candela maximum	Candela minimum	Candela maximum	Candela minimum
2U-V	–	750	–	750
1U-3L and 3R	–	3,000	–	2,000
H-V	60,000	18,000	15,000	7,000
H-3L and 3R	–	12,000	–	3,000
H-6L and 6R	–	3,000	–	2,000
H-9L and 9R	–	2,000	–	1,000
H-12L and 12R	–	750	–	750
1.5D-V	–	3,000	–	2,000
1.5D-9L and 9R	–	1,250	–	750
2.5D-V	–	1,500	–	1,000
2.5D-12L and 12R	–	600	–	400
4D-V	5,000	–	2,500	–

LOWER BEAM

Headlamp Type	2A1, 2C1, and	2G1
Test Points (degrees)	Candela maximum	Candela minimum
10U-90U	125	–
4U-8L and 8R	–	64
2U-4L	–	135
1.5U-1R to 3R	–	200
1.5U-1R to R	1,400	–
1U-1.5L to L	700	–
0.5U-1.5L to L	1,000	–
0.5U-1R to 3R	2,700	500
H-4L	–	135
H-8L	–	64
0.6D-1.3R	–	10,000
0.86D-V	–	4,500
0.86D-3.5L	12,000	1,800
1.5D-2R	–	15,000
2D-9L and 9R	–	1250
2D-15L and 15R	–	1000
4D-4R	12,500	–
4D-20L and 20R	–	300

FIGURE 29—MINIMUM PHOTOMETRIC PERFORMANCE OF RETROFLECTIVE SHEETING IN CANDELA/LUX/SQUARE METER

Entrance angle	Observation angle				Grade
	0.2 Degree		0.5 Degree		
	White	Red	White	Red	
−4 degree	250	60	65	15	DOT–C2
30 degree	250	60	65	15	DOT–C2
45 degree	60	15	15	4	DOT–C2
−4 degree	165	40	43	10	DOT–C3
30 degree	165	40	43	10	DOT–C3
45 degree	40	10	10	3	DOT–C3
−4 degree	125	30	33	8	DOT–C4
30 degree	125	30	33	8	DOT–C4
45 degree	30	8	8	2	DOT–C4

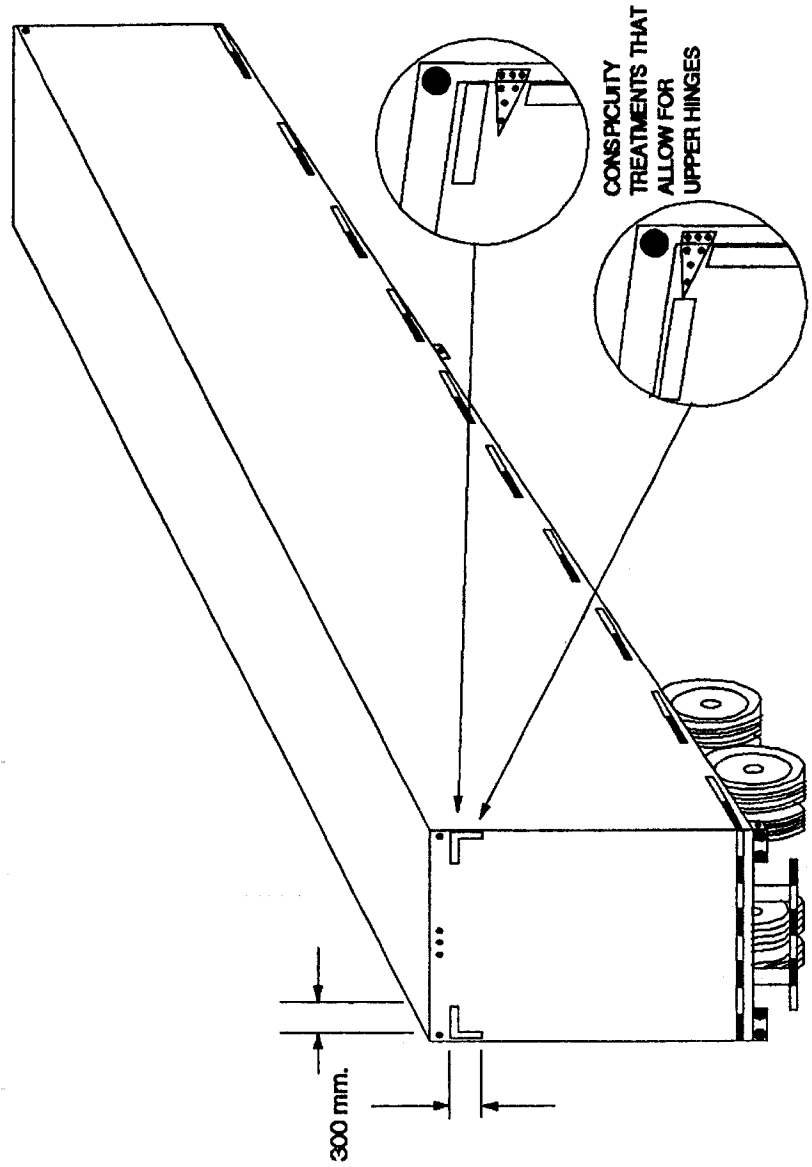

Figure 30-1
Trailer Conspicuity Treatment Example

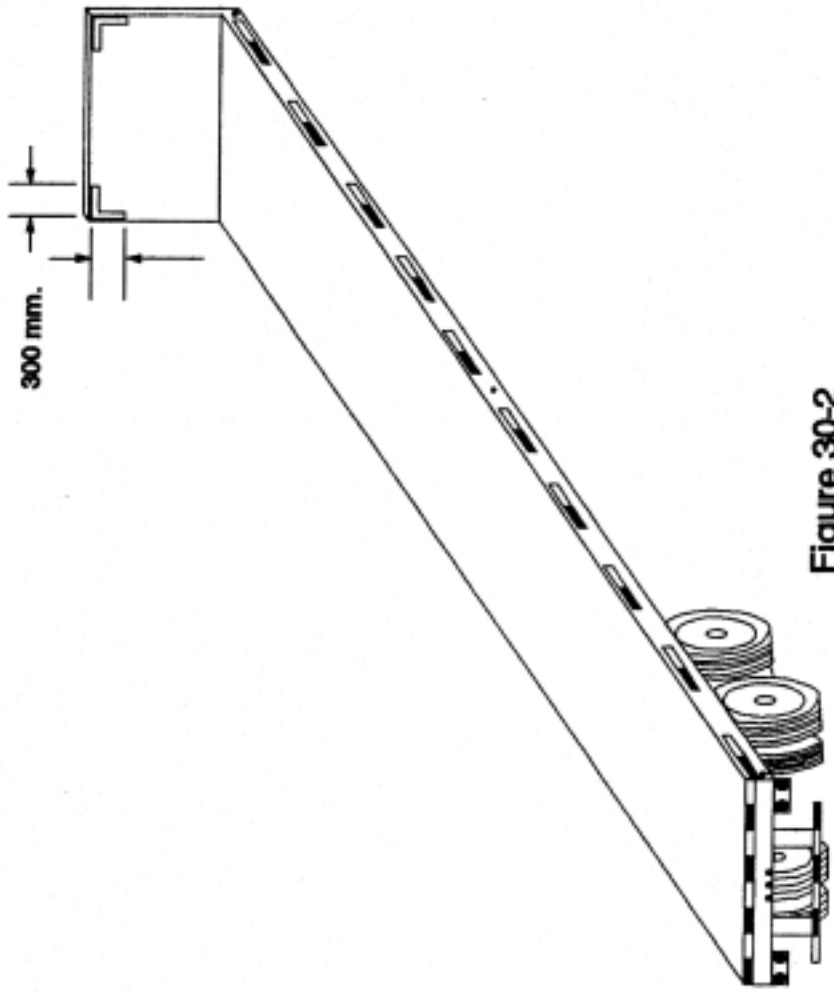

Figure 30-2
Trailer Conspicuity Treatment Example

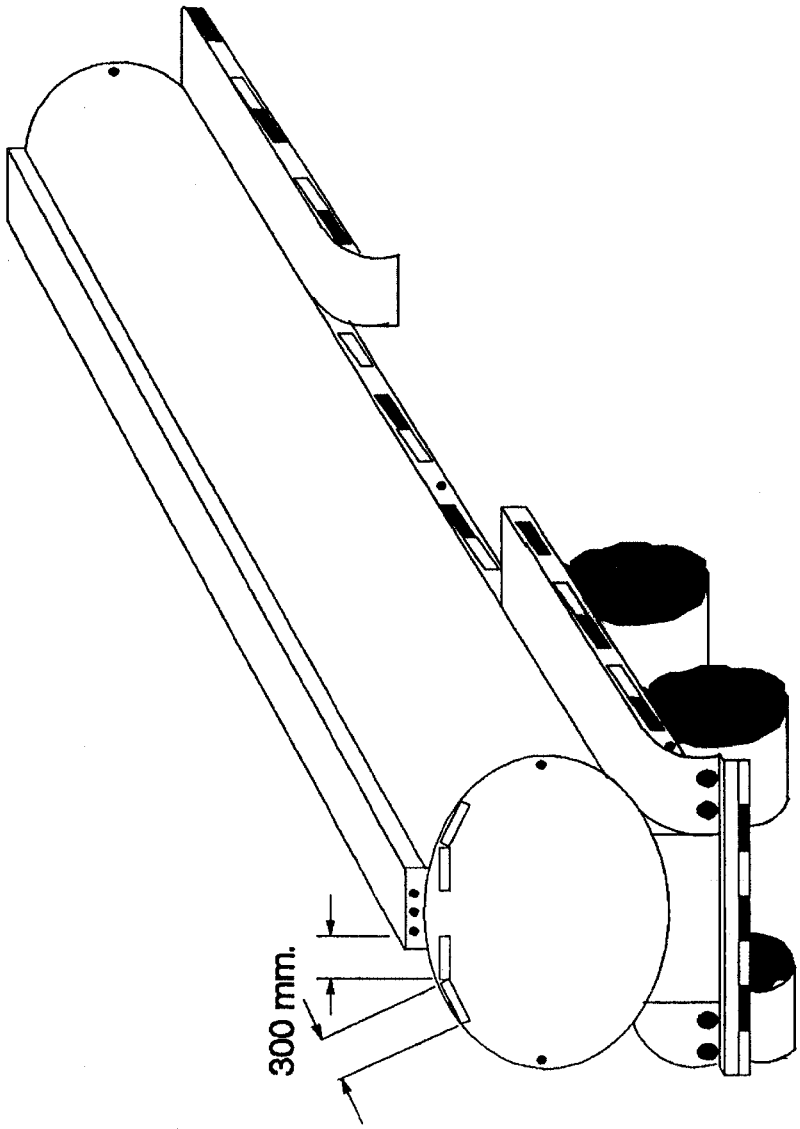

Figure 30-3
Trailer Conspicuity Treatment Example

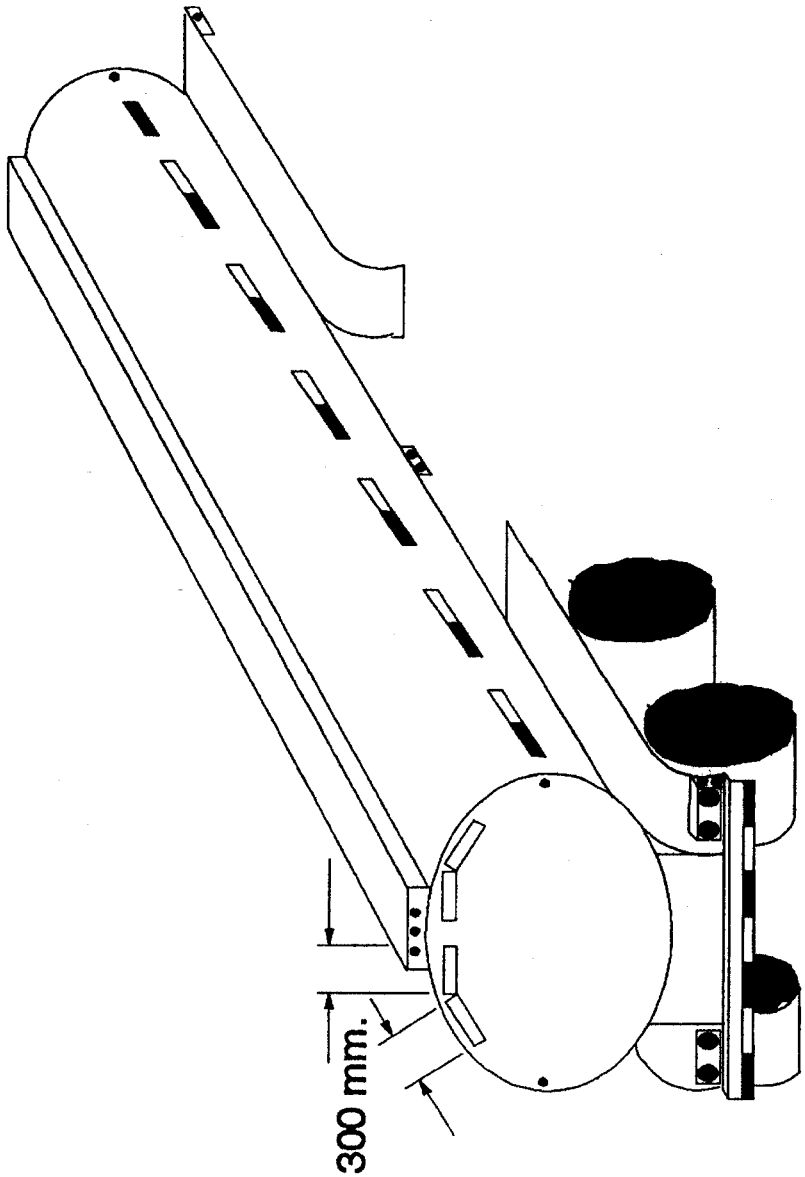

Figure 30–4
Trailer Conspicuity Treatment Example

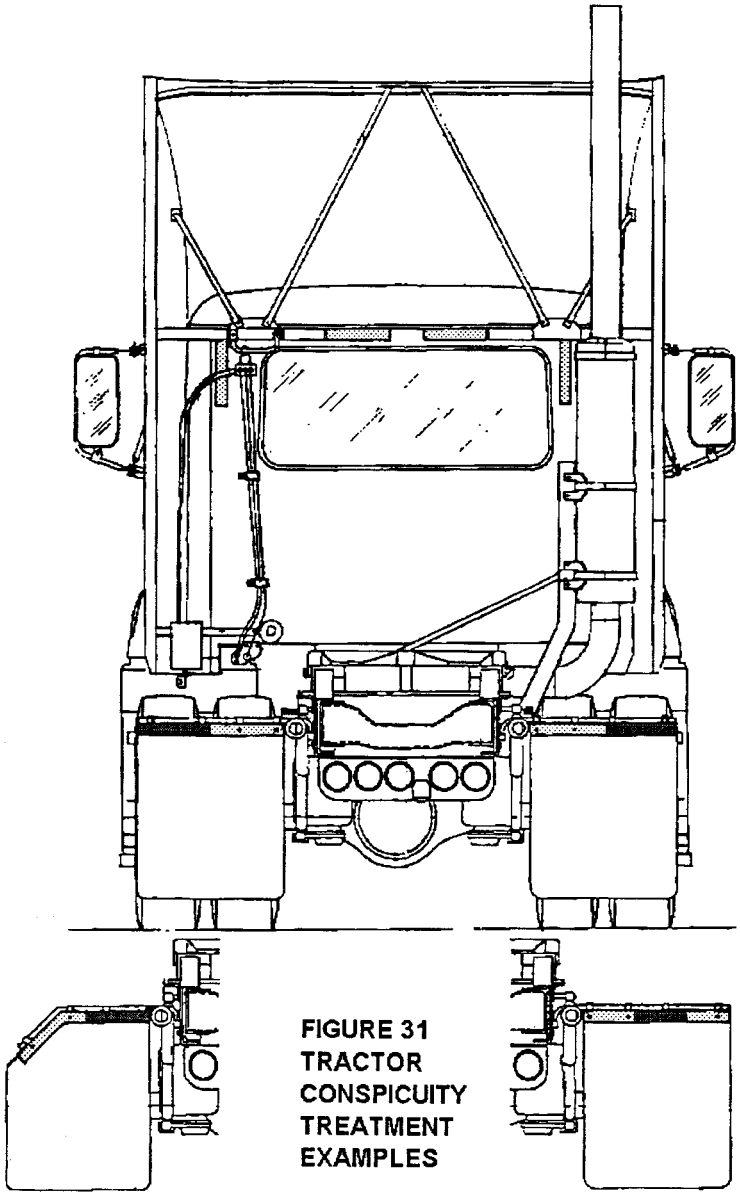

FIGURE 31
TRACTOR
CONSPICUITY
TREATMENT
EXAMPLES

FIGURE 32—MOTORCYCLE AND MOTOR-DRIVEN CYCLE HEADLAMP PHOTOMETRIC REQUIREMENTS

Test Points (deg.)		Motorcycle (candela)	Motor-Driven Cycle (candela)	Motor-Driven Cycle with Single Lamp System (candela)
Up or Down	Left or Right			
Lower Beam				
1.5U	1R to R	1400-MAX	1400-MAX	
1.5U	1R to 3R			1400-MAX.
1U	1.5L to L	700-MAX	700-MAX	700-MAX.
0.5U	1.5L to L	1000-MAX	1000-MAX	1000-MAX.
0.5U	1R to 3R	2700-MAX	2700-MAX	2700-MAX.
1.5D	9L and 9R	700-MIN		
2D	0.0R	7000-MIN	5000-MIN	4000-MIN.
2D	3L and 3R	4000-MIN	3000-MIN	3000-MIN.
2D	6L and 6R	1500-MIN	1500-MIN	1500-MIN.
2D	12L and 12R	700-MIN		
3D	6L and 6R	800-MIN	800-MIN	
4D	0.0R	2000-MIN	2000-MIN	1000-MIN.
4D	4R	12500-MAX	12500-MAX	12500-MAX.
Upper Beam				
2U	0.0R	1000-MIN		
1U	3L and 3R	2000-MIN	2000-MIN.	
0.0U	0.0R	12500-MIN	10000-MIN.	
0.5D	0.0R	20000-MIN	20000-MIN.	
0.5D	3L and 3R	10000-MIN	5000-MIN.	
0.5D	6L and 6R	3300-MIN	2000-MIN.	
0.5D	9L and 9R	1500-MIN		
0.5D	12L and 12R	800-MIN		
1D	0.0R	17500-MIN	15000-MIN.	
2D	0.0R	5000-MIN	5000-MIN.	
3D	0.0R	2500-MIN	2500-MIN.	
3D	6L and 6R		800-MIN.	
3D	9L and 9R	1500-MIN		
3D	12L and 12R	300-MIN		
4D	0.0R	1500-MIN		
4D	0.0R	7500-MAX	7500-MAX.	
ANYWHERE	ANYWHERE	75000-MAX	75000-MAX.	

TABLE I—REQUIRED MOTOR VEHICLE LIGHTING EQUIPMENT OTHER THAN HEADLAMPS

Multipurpose Passenger Vehicles, Trucks, Trailers, and Buses, of 80 or More Inches Overall Width

Item	Multipurpose passenger vehicles, trucks, and buses	Trailers	Applicable SAE standard or recommended practice (See S5 for subreferenced SAE materials)
Taillamps	2 red	2 red	J585e, September 1977.
Stoplamps	2 red	2 red	SAE J1398, May 1985.
License plate lamp	1 white	1 white	J587 October 1981.
Reflex reflectors	4 red; 2 amber	4 red; 2 amber	J594f, January 1977.
Side marker lamps	2 red; 2 amber	2 red; 2 amber	J592e, July 1972.
Backup lamp	1 white	None	J593c, February 1968.
Turn signal lamps	2 red or amber; 2 amber	2 red or amber	SAE J1395, April 1985.
Turn signal operating unit	1	None	J589, April 1964.
Turn signal flasher	1	None	J590b, October 1965.
Vehicular hazard warning signal operating unit.	1	None	J910, January 1966.
Vehicular hazard warning signal flasher..	1	None	J945, February 1966.
Identification lamps	3 amber; 3 red	3 red	J592e, July 1972.
Clearance lamps	2 amber; 2 red	2 amber, 2 red	J592e, July 1972.
Intermediate side marker lamps.	2 amber	2 amber	J592e, July 1972.
Intermediate side reflex reflectors.	2 amber	2 amber	J594f, January 1977.
Conspicuity	See S5.7	See S5.7	See S5.7

TABLE II—LOCATION OF REQUIRED EQUIPMENT

Multipurpose Passenger Vehicles, Trucks, Trailers, and Buses, of 80 or More Inches Overall Width

Item	Location on—		Height above road surface measured from center of item on vehicle at curb weight
	Multipurpose passenger vehicles, trucks, and buses	Trailers	
Headlamps	On the front, each headlamp providing the upper beam, at the same height, 1 on each side of the vertical centerline, each headlamp providing the lower beam, at the same height, 1 on each side of the vertical centerline, as far apart as practicable. See also S7.	Not required	Not less than 22 inches (55.9 cm) nor more than 54 inches (137.2 cm).
Taillamps	On the rear, 1 on each side of the vertical centerline, at the same height, and as far apart as practicable.	On the rear, 1 on each side of the vertical centerline, at the same height, and as far apart as practicable.	Not less than 15 inches, nor more than 72 inches.
Stop lamps	.....do	.....do	Do.
License plate lamp	At rear license plate, to illuminate the plate from the top or sides.	At rear license plate, to illuminate the plate from the top or sides.	No requirement.
Backup lamp	On the rear	Not required	Do.
Turn signal lamps	At or near the front—1 amber on each side of the vertical centerline, at the same height, and as far apart as practicable. On the rear—1 red or amber on each side of the vertical centerline, at the same height, and as far apart as practicable.	On the rear—1 red or amber on each side of the vertical centerline, at the same height, and as far apart as practicable.	Not less than 15 inches, nor more than 83 inches.
Identification lamps	On the front and rear—3 lamps, amber in front, red in rear, as close as practicable to the top of the vehicle, at the same height, as close as practicable to the vertical centerline, with lamp centers spaced not less than 6 inches or more than 12 inches apart. Alternatively, the front lamps may be located as close as practicable to the top of the cab.	On the rear—3 lamps as close as practicable to the top of the vehicle at the same height, as close as practicable to the vertical centerline, with lamp centers spaced not less than 6 inches or more than 12 inches apart.	No requirement.
Clearance lamps	On the front and rear—2 amber lamps on front, 2 red lamps on rear, to indicate the overall width of the vehicle, one on each side of the vertical centerline, at the same height, and as near the top as practicable.	On the front and rear—2 amber lamps on front, 2 red lamps on rear, to indicate the overall width of the vehicle, one on each side of the vertical centerline, at the same height, and as near the top thereof as practicable[2, 3 4].	Do.
Intermediate side marker lamps.	On each side—1 amber lamp located at or near the midpoint between the front and rear side marker lamps.	On each side—1 amber lamp located at or near the midpoint between the front and rear side marker lamps.	Not less than 15 inches.
Intermediate side reflex reflectors.	On each side—1 amber located at or near the midpoint between the front and rear side reflex reflectors.	On each side—1 amber located at or near the midpoint between the front and rear side reflex reflectors.	Not less than 15 inches nor more than 60 inches.
Conspicuity	See S5.7	See S5.7	See S5.7
Reflex reflectors	On the rear—1 red on each side of the vertical centerline, as far apart as practicable, and at the same height. On each side—1 red as far to the rear as practicable, and 1 amber as far to the front as practicable.	On the rear—1 red on each side of the vertical centerline, as far apart as practicable, and at the same height. On each side—1 red as far to the rear as practicable, and 1 amber as far to the front as practicable.	Do.
Side marker lamps	.....do	.....do	Not less than 15 inches, and on the rear of trailers not more than 60 inches.

TABLE III—REQUIRED MOTOR VEHICLE LIGHTING EQUIPMENT

[All Passenger Cars and Motorcycles, and Multipurpose Passenger Vehicles, Trucks, Buses and Trailers of Less Than 80 (2032) Inches (mm) Overall Width]

Item	Passenger cars, multipurpose passenger vehicles, trucks, and buses	Trailers	Motorcycles	Applicable SAE standard or recommended practice (See S5 for subreferenced SAE materials)
Headlamps	See S7	None	See S7.9	J566 January 1960.
Taillamps	2 red	2 red	1 red	J585e, September 1977.
Stoplamps	2 red	2 red	1 red	SAE J586, February 1984.
High-mounted stoplamp.	1 red	Not required	Not required	J186a, September 1977.
License plate lamp.	1 white	1 white	1 white	J587, October 1981.
Parking lamps	2 amber or white	None	None	J222, December 1970.
Reflex reflectors	4 red; 2 amber	4 red; 2 amber	3 red; 2 amber	J594f, January 1977.
Intermediate side reflex reflectors.	2 amber	2 amber	None	J594f, January 1977.
Intermediate side marker lamps.	2 amber	2 amber	None	J592e, July 1972.
Side marker lamps.	2 red; 2 amber	2 red; 2 amber	None	J592e, July 1972.
Backup lamp	1 white	None	None	J593c, February 1968.
Turn signal lamps	2 red or amber; 2 amber	2 red or amber	2 amber; 2 red or amber.	SAE J588, November 1984.
Turn signal operating unit.[3,& 4]	1	None	1	J589, April 1964.
Turn signal flasher	1	None	1	J590b, October 1965.
Vehicular hazard warning signal operating unit.	1	None	None	J910, January 1966.
Vehicular hazard warning signal flasher.	1	None	None	J945, February 1966.

TABLE IV—LOCATION OF REQUIRED EQUIPMENT

[All Passenger Cars and Motorcycles, and Multipurpose Passenger Vehicles, Trucks, Trailers, and Buses of Less than 80 (2032) Inches (MM) Overall Width]

Item	Location on—		Height above road surface measured from center of item on vehicle at curb weight
	Passenger cars, multipurpose passenger vehicles, trucks, trailers, and buses	Motorcycles	
Headlamps	On the front, each headlamp providing the lower beam, at the same height, 1 on each side of the vertical centerline, each headlamp providing the upper beam, at the same height, 1 on each side of the vertical centerline, as far apart as practicable. See also S7.	See S7.9	Not less than 22 inches (55.9 cm) nor more than 54 inches (137.2 cm).
Taillamps	On the rear—1 on each side of the vertical centerline, at the same height, and as far apart as practicable.	On the rear—on the vertical centerline except that if two are used, they shall be symmetrically disposed about the vertical centerline.	Not less than 15 inches, nor more than 72 inches.
Stoplamps	On the rear—1 on each side of the vertical centerline, at the same height, and as far apart as practicable.	On the rear—on the vertical centerline except that if two are used, they shall be symmetrically disposed about the vertical centerline.	Not less than 15 inches, nor more than 72 inches.
High-mounted stoplamp.	On the rear, on the vertical centerline [See S5.1.1.27, S5.3.1.8, and Table III], effective September 1, 1985, for passenger cars only.	Not required	See S5.3.1.8 for passenger cars. Not less than 34 inches for multipurpose passenger vehicles, trucks, and buses.

TABLE IV—LOCATION OF REQUIRED EQUIPMENT—Continued

[All Passenger Cars and Motorcycles, and Multipurpose Passenger Vehicles, Trucks, Trailers, and Buses of Less than 80 (2032) Inches (MM) Overall Width]

Item	Location on—		Height above road surface measured from center of item on vehicle at curb weight
	Passenger cars, multipurpose passenger vehicles, trucks, trailers, and buses	Motorcycles	
License plate lamp	At rear license plate, to illuminate the plate from the top or sides.	At rear license plate	No requirement.
Parking lamps	On the front—1 on each side of the vertical centerline, at the same height, and as far apart as practicable.	Not required	Not less than 15 inches, nor more than 72 inches.
Reflex reflectors	On the rear—1 red on each side of the vertical centerline, at the same height, and as far apart as practicable. On each side—1 red as far to the rear as practicable, and 1 amber as far to the front as practicable.	On the rear—1 red on the vertical centerline except that, if two are used on the rear, they shall be symmetrically disposed about the vertical centerline. On each side—1 red as far to the rear as practicable, and 1 amber as far to the front as practicable.	Not less than 15 inches, nor more than 60 inches.
Backup lamp	On the rear	Not required	No requirement.
Turn signal lamps	At or near the front—1 amber on each side of the vertical centerline, at the same height, and as far apart as practicable. On the rear—1 red or amber on each side of the vertical centerline, at the same height, and as far apart as practicable.	At or near the front—1 amber on each side of the vertical centerline at the same height, and having a minimum horizontal separation distance (centerline of lamps) of 16 inches. Minimum edge to edge separation distance between lamp and headlamp is 4 inches. At or near the rear—1 red or amber on each side of the vertical centerline, at the same height and having a minimum horizontal separation distance (centerline to centerline of lamps) of 9 inches. Minimum edge to edge separation distance between lamp and tail or stop lamp is 4– inches, when a single stop and taillamp is installed on the vertical centerline and the turn signal lamps are red..	Not less than 15 inches, nor more than 83 inches.
Side marker lamps	On each side—1 red as far to the rear as practicable, and 1 amber as far to the front as practicable.	Not required	Not less than 15 inches.
Intermediate side marker lamps.	On each side—1 amber located at or near the midpoint between the front and rear side marker lamps.	Not required	Not less than 15 inches.
Intermediate side marker reflectors.	On each side—1 amber located at or near the midpoint between the front and rear side marker reflectors.	Not required	Not less than 15 inches, nor more than 60 inches.

>NOTE: (1) The term *overall width* refers to the nominal design dimension of the widest part of the vehicle, exclusive of signal lamps, marker lamps, outside rearview mirrors, flexible fender extensions, and mud flaps, determine with doors and windows closed, and the wheels in the straight-ahead position.

This supersedes the interpretation of the term ''overall width'' appearing in the FEDERAL REGISTER of March 1, 1967 (32 FR 3390).

(2) Paragraph S3.1 and Tables I and III of §571.108 as amended (32 FR 18033, Dec. 16, 1967), specify that certain lamp assemblies shall conform to applicable SAE Standards. Each of these basically referenced standards subreferences both SAE Standard J575 (tests for motor vehicle lighting devices and components) which in turn references SAE Standard J573 on bulbs, and SAE Standard J567 on bulb sockets.

(3) Paragraph C of SAE Standard J575 states in part: ''Where special bulbs are specified, they should be submitted with the devices and the same or similar bulbs used in the tests and operated at their rated mean spherical candlepower.'' The Administrator has determined that this provision of SAE Standard J575 permits the use of special bulbs, including tubular-type bulbs, which do not conform to the detailed requirements of Table I of SAE Standard J573. It follows that the sockets for special bulbs need not conform to the detailed requirements of SAE Standard J567. These provisions for special bulbs in no way except the lamp assemblies from meeting all performance requirements specified in Federal Standard No. 108, including those specified in the basically referenced SAE Standards, and in the subreferenced SAE Standard J575.

[41 FR 35522, Aug. 23, 1976]

EDITORIAL NOTE: For FEDERAL REGISTER citations affecting §571.108, see the List of CFR Sections Affected, which appears in the Finding Aids section of the printed volume and on GPO Access.

§ 571.109 Standard No. 109; New pneumatic tires.

S1. *Scope*. This standard specifies tire dimensions and laboratory test requirements for bead unseating resistance, strength, endurance, and high speed performance; defines tire load ratings; and specifies labeling requirements for passenger car tires.

S2. *Application*. This standard applies to new pneumatic tires for use on passenger cars manufactured after 1948. However, it does not apply to any tire which has been altered so as to render impossible its use, or its repair for use, as motor vehicle equipment.

S3. *Definitions*.

Bead means that part of the tire made of steel wires, wrapped or reinforced by ply cords, that is shaped to fit the rim.

Bead separation means a breakdown of bond between components in the bead area.

Bias ply tire means a pneumatic tire in which the ply cords that extend to the beads are laid at alternate angles substantially less than 90° to the centerline of the tread.

Carcass means the tire structure, except tread and sidewall rubber.

Chunking means the breaking away of pieces of the tread or sidewall.

Cord means the strands forming the plies in the tire.

Cord separation means cords parting away from adjacent rubber compounds.

Cracking means any parting within the tread, sidewall, or innerliner of the tire extending to cord material.

CT means a pneumatic tire with an inverted flange tire and rim system in which the rim is designed with rim flanges pointed radially inward and the tire is designed to fit on the underside of the rim in a manner that encloses the rim flanges inside the air cavity of the tire.

Groove means the space between two adjacent tread ribs.

Innerliner means the layer(s) forming the inside surface of a tubeless tire that contains the inflating medium within the tire.

Innerliner separation means the parting of the innerliner from cord material in the carcass.

Load rating means the maximum load a tire is rated to carry for a given inflation pressure.

Maximum permissible inflation pressure means the maximum cold inflation pressure to which a tire may be inflated.

Maximum load rating means the load rating at the maximum permissible inflation pressure for that tire.

Open splice means any parting at any junction of tread, sidewall, or innerliner that extends to cord material.

Overall width means the linear distance between the exteriors of the sidewalls of an inflated tire, including elevations due to labeling, decorations, or protective bands or ribs.

Ply means a layer of rubber-coated parallel cords.

Ply separation means a parting of rubber compound between adjacent plies.

Pneumatic tire means a mechanical device made of rubber, chemicals, fabric and steel or other materials, which, when mounted on an automotive wheel, provides the traction and contains the gas or fluid that sustains the load.

Radial ply tire means a pneumatic tire in which the ply cords which extend to the beads are laid at substantially 90° to the centerline of the tread.

Rim means a metal support for a tire or a tire and tube assembly upon which the tire beads are seated.

Section width means the linear distance between the exteriors of the sidewalls of an inflated tire, excluding elevations due to labeling, decoration, or protective bands.

Sidewall means that portion of a tire between the tread and the bead.

Sidewall separation means the parting of the rubber compound from the cord material in the sidewall.

Test rim means, with reference to a tire to be tested, any rim that is listed as appropriate for use with that tire in accordance with S4.4. For purposes of this section and § 571.110, each rim listing shall include dimensional specifications and a diagram of the rim.

Tread means that portion of a tire that comes into contact with the road.

Tread rib means a tread section running circumferentially around a tire.

Tread separation means pulling away of the tread from the tire carcass.

S4. *Requirements.*

S4.1 *Size and construction.* Each tire shall be designed to fit each rim specified for its size designation in each reference cited in the definition of *test rim* in S3.

S4.2 *Performance requirements.*

S4.2.1 *General.* Each tire shall conform to each of the following:

(a) It shall meet the requirements specified in S4.2.2 for its tire size designation, type, and maximum permissible inflation pressure.

(b) Its maximum permissible inflation pressure shall be either 32, 36, 40, or 60 psi, or 240, 280, 300, 340, or 350 kPa. For a CT tire, the maximum permissible inflation pressure shall be either 290, 330, 350, or 390 kPa.

(c) Its load rating shall be that specified in a submission made by an individual manufacturer, pursuant to S4.4.1(a), or in one of the publications described in S4.4.1(b) for its size designation, type and each appropriate inflation pressure. If the maximum load rating for a particular tire size is shown in more than one of the publications described in S4.4.1(b), each tire of that size designation shall have a maximum load rating that is not less than the published maximum load rating, or if there are differing maximum load ratings for the same tire size designation, not less than the lowest published maximum load rating.

(d) It shall incorporate a tread wear indicator that will provide a visual indication that the tire has worn to a tread depth of 1/16 inch.

(e) It shall, before being subjected to either the endurance test procedure specified in S5.4 or the high speed performance procedure specified in S5.5, exhibit no visual evidence of tread, sidewall, ply, cord, innerliner, or bead separation, chunking, broken cords, cracking, or open splices.

(f) It shall meet the requirements of S4.2.2.5 and S4.2.2.6 when tested on a test wheel described in S5.4.2.1 either alone or simultaneously with up to 5 other tires.

S4.2.2 *Test requirements.*

S4.2.2.1 *Test sample.* For each test sample use:

(a) One tire for physical dimensions, resistance to bead unseating, and strength, in sequence;

(b) Another tire for tire endurance; and

(c) A third tire for high speed performance.

S4.2.2.2 *Physical dimensions.* The actual section width and overall width for each tire measured in accordance with S5.1, shall not exceed the section width specified in a submission made by an individual manufacturer, pursuant to S4.4.1(a) or in one of the publications described in S4.4.1(b) for its size designation and type by more than:

(a) (For tires with a maximum permissible inflation pressure of 32, 36, or 40 psi) 7 percent, or

(b) (For tires with a maximum permissible inflation pressure of 240, 280, 290, 300, 330, 350 or 390 kPa, or 60 psi) 7 percent or 10 mm (0.4 inches), whichever is larger.

S4.2.2.3 *Tubeless tire resistance to bead unseating.*

S4.2.2.3.1 When a tubeless tire that has a maximum inflation pressure other than 60 psi is tested in accordance with S5.2, the applied force required to unseat the tire bead at the point of contact shall be not less than:

(a) 1,500 pounds for tires with a designated section width of less than six (6) inches;

(b) 2,000 pounds for tires with a designated section width of six (6) inches or more but less than eight (8) inches;

(c) 2,500 pounds for tires with a designated section width of eight (8) inches or more, using the section width specified in a submission made by an individual manufacturer, pursuant to S4.4.1(a), or in one of the publications described in S4.4.1(b) for the applicable tire size designation and type.

S4.2.2.3.2 When a tire that has a maximum inflation pressure of 60 psi is tested in accordance with S5.2, the applied force required to unseat the bead at the point of contact shall be not less than:

(a) 1,500 pounds for tires with a maximum load rating of less than 880 pounds;

(b) 2,000 pounds for tires with a maximum load rating of 880 pounds or more but less than 1,400 pounds;

(c) 2,500 pounds for tires with a maximum load rating of 1,400 pounds or more, using the maximum load rating marked on the sidewall of the tire.

S4.2.2.4 *Tire strength.* Each tire shall meet the requirements for minimum breaking energy specified in Table 1 when tested in accordance with S5.3.

S4.2.2.5 *Tire endurance.* When the tire has been subjected to the laboratory endurance test specified in S5.4, using a test rim that undergoes no permanent deformation and allows no loss of air through the portion that it comprises of the tire-rim pressure chamber:

(a) There shall be no visual evidence of tread, sidewall, ply, cord, innerliner, or bead separation, chunking, broken cords, cracking, or open splices.

(b) The tire pressure at the end of the test shall be not less than the initial pressures specified in S5.4.1.1.

S4.2.2.6 *High speed performance.* When the tire has been subjected to the laboratory high speed performance test specified in S5.5, using a test rim that undergoes no permanent deformation and allows no loss of air through the portion that it comprises of the tire-rim pressure chamber, the tire shall meet the requirements set forth in S4.2.2.5 (a) and (b).

S4.3 *Labeling Requirements.* Except as provided in S4.3.1 and S4.3.2, each tire shall have permanently molded into or onto both sidewalls, in letters and numerals not less than 0.078 inches high, the information shown in paragraphs S4.3 (a) through (g). On at least one sidewall, the information shall be positioned in an area between the maximum section width and bead of the tire, unless the maximum section width of the tire falls between the bead and one-fourth of the distance from the bead to the shoulder of the tire. For tires where the maximum section width falls in that area, locate all required labeling between the bead and a point one-half the distance from the bead to the shoulder of the tire. However, in no case shall the information be positioned on the tire so that it is obstructed by the flange or any rim designated for use with that tire in Standards Nos. 109 and 110 (§ 571.109 and § 571.110 of this part). (a) One size designation, except that equivalent inch and metric size designations may be used;

(b) Maximum permissible inflation pressure;

(c) Maximum load rating;

(d) The generic name of each cord material used in the plies (both sidewall and tread area) of the tire;

(e) Actual number of plies in the sidewall, and the actual number of plies in the tread area if different;

(f) The words ''tubeless'' or ''tube type'' as applicable; and

(g) The word ''radial'' if the tire is a radial ply tire.

S4.3.1 Each tire shall be labeled with the symbol DOT in the manner specified in part 574 of this chapter, which shall constitute a certification that the tire conforms to applicable Federal motor vehicle safety standards.

S4.3.2 Each tire shall be labeled with the name of the manufacturer, or brand name and number assigned to the manufacturer in the manner specified in part 574.

S4.3.3 [Reserved]

S4.3.4 If the maximum inflation pressure of a tire is 240, 280, 290, 300, 330, 340, 350, or 390 kPa, then:

(a) Each marking of that inflation pressure pursuant to S4.3(b) shall be followed in parenthesis by the equivalent inflation pressure in psi, rounded to the next higher whole number; and

(b) Each marking of the tire's maximum load rating pursuant to S4.3(c) in kilograms shall be followed in parenthesis by the equivalent load rating in pounds, rounded to the nearest whole number.

S4.3.5 If the maximum inflation pressure of a tire is 420 kPa (60 psi), the tire shall have permanently molded into or onto both sidewalls, in letters and numerals not less than 1/2 inch high, the words ''Inflate to 60 psi'' or ''Inflate to 420 kPa (60 psi).'' On both sidewalls, the words shall be positioned in an area between the tire shoulder and the bead of the tire. However, in no case shall the words be positioned on the tire so that they are obstructed by the flange of any rim designated for use with that tire in this standard or in Standard No. 110 (§ 571.110 of this part).

S4.4 *Tire and rim matching information.*

S4.4.1 Each manufacturer of tires shall ensure that a listing of the rims that may be used with each tire that he produces is provided to the public. A listing compiled in accordance with paragraph (a) of this section need not include dimensional specifications or diagram of a rim if the rim's dimensional specifications and diagram are contained in each listing published in accordance with paragraph (b) of this standard. The listing shall be in one of the following forms:

(a) Listed by manufacturer name or brand name in a document furnished to dealers of the manufacturer's tires, to any person upon request, and in duplicate to the Docket Section, National Highway Traffic Safety Administration, 400 Seventh Street SW., Washington, DC 20590; or

(b) Contained in publications, current at the date of manufacture of the tire or any later date, of at least one of the following organizations:

The Tire and Rim Association
The European Tyre and Rim Technical Organisation
Japan Automobile Tire Manufacturers' Association, Inc.
Deutsche Industrie Norm
British Standards Institution
Scandinavian Tire and Rim Organization
The Tyre and Rim Association of Australia

S4.4.2 Information contained in any publication specified in S4.4.1(b) which lists general categories of tires and rims by size designation, type of construction and/or intended use, shall be considered to be manufacturer's information pursuant to S4.4.1 for the listed tires and rims, unless the publication itself or specific information provided according to S4.4.1(a) indicates otherwise.

S5. *Test procedures.*

S5.1 *Physical Dimensions.* Determine tire physical dimensions under uniform ambient conditions as follows:

(a) Mount the tire on a test rim having the test rim width specified in a submission made by an individual manufacturer, pursuant to S4.4.1(a), or in one of the publications described in S4.4.1(b) for that tire size designation and inflate it to the applicable pressure specified in Table II.

(b) Condition it at ambient room temperature for at least 24 hours.

(c) Readjust pressure to that specified in (a).

(d) Caliper the section width and overall width at six points approximately equally spaced around the tire circumference.

(e) Record the average of these measurements as the section width and overall width, respectively.

(f) Determine tire outer diameter by measuring the maximum circumference of the tire and dividing this dimension by pi (3.14).

S5.2 *Tubeless tire bead unseating resistance.*

S5.2.1 *Preparation of tire-wheel assembly.*

S5.2.1.1 Wash the tire, dry it at the beads, and mount it without lubrication or adhesives on a clean, painted test rim.

S5.2.1.2 Inflate it to the applicable pressure specified in Table II at ambient room temperature.

S5.2.1.3 Mount the wheel and tire in a fixture shown in Figure 1, and force the bead unseating block shown in Figure 2 or Figure 2A against the tire sidewall as required by the geometry of the fixture. However, in testing a tire that has an inflation pressure of 60 psi, only use the bead unseating block described in Figure 2A.

S5.2.2 *Test procedure.*

S5.2.2.1 Apply a load through the block to the tire outer sidewall at the distance specified in Figure 1 for the applicable wheel size at a rate of 2 inches per minute, with the load arm substantially parallel to the tire and rim assembly at the time of engagement.

S5.2.2.2 Increase the load until the bead unseats or the applicable value specified in S4.2.2.3 is reached.

S5.2.2.3 Repeat the test at least four places equally spaced around the tire circumference.

S5.3 *Tire strength.*

S5.3.1 *Preparation of tire.*

S5.3.1.1 Mount the tire on a test rim and inflate it to the applicable pressure specified in Table II.

S5.3.1.2 Condition it at room temperature for at least 3 hours; and

S5.3.1.3 Readjust its pressure to that specified in S5.3.1.1.

S5.3.2 *Test procedure.*

S5.3.2.1 Force a ¾-inch diameter cylindrical steel plunger with a hemispherical end perpendicularly into the tread rib as near to the centerline as possible, avoiding penetration into the tread groove, at the rate of 2 inches per minute.

S5.3.2.2 Record the force and penetration at five test points equally spaced around the circumference of the tire. If the tire fails to break before the plunger is stopped by reaching the rim, record the force and penetration as the rim is reached and use these values in S5.3.2.3.

S5.3.2.3 Compute the breaking energy for each test point by means of the following formula:

$$W = [(F \times P) / 2]$$

where

W=Energy, inch-pounds;
F=Force, pounds; and
P=Penetration, inches.

S5.3.2.4 Determine the breaking energy value for the tire by computing the average of the five values obtained in accordance with S5.3.2.3.

S5.4 *Tire endurance.*

S5.4.1 *Preparation of tire.*

S5.4.1.1 Mount a new tire on a test rim and inflate it to the applicable pressure specified in Table II.

S5.4.1.2 Condition the tire assembly to 100±5 °F. for at least three hours.

S5.4.1.3 Readjust tire pressure to that specified in S5.4.1.1 immediately before testing.

S5.4.2 *Test procedure.*

S5.4.2.1 Mount the tire and wheel assembly on a test axle and press it against a flat-faced steel test wheel 67.23 inches in diameter and at least as wide as the section width of the tire to be tested or an approved equivalent test wheel, with the applicable test load specified in the table in S5.4.2.3 for the tire's size designation, type, and maximum permissible inflation pressure.

S5.4.2.2 During the test, the air surrounding the test area shall be 100±5 °F.

S5.4.2.3 Conduct the test at 50 miles per hour in accordance with the following schedule without pressure adjustment or other interruptions:

The loads for the following periods are the specified percentage of the maximum load rating marked on the tire sidewall:

	Percent
4 hours	85
6 hours	90
24 hours	100

S5.4.2.4 Immediately after running the tire the required time, measure its inflation pressure. Allow the tire to cool for one hour. Then deflate the tire, remove it from the test rim, and inspect it for the conditions specified in S4.2.2.5(a).

S5.5 *High speed performance.*

S5.5.1 After preparing the tire in accordance with S5.4.1, mount the tire and wheel assembly in accordance with S5.4.2.1, and press it against the test wheel with a load of 88 percent of the tire's maximum load rating as marked on the tire sidewall.

S5.5.2 Break in the tire by running it for 2 hours at 50 m.p.h.

S5.5.3 Allow to cool to 100±5 °F and readjust the inflation pressure to the applicable pressure specified in Table II.

S5.5.4 Without readjusting inflation pressure, test at 75 m.p.h. for 30 minutes, 80 m.p.h. for 30 minutes, and 85 m.p.h. for 30 minutes.

S5.5.5 Immediately after running the tire the required time, measure its inflation pressure. Allow the tire to cool for one hour. Then deflate the tire, remove it from the test rim, and inspect it for the conditions specified in S4.2.2.5(a).

S6. *Nonconforming tires.* No tire that is designed for use on passenger cars and manufactured on or after October 1, 1972, but does not conform to all the requirements of this standard, shall be sold, offered for sale, introduced or delivered for introduction into interstate commerce, or imported into the United States, for any purpose.

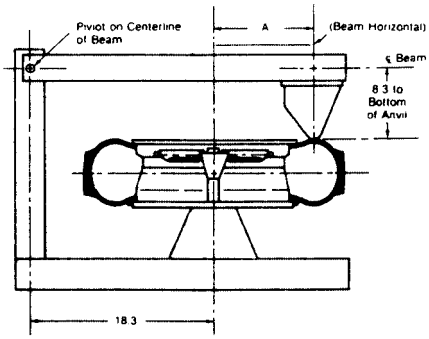

FIGURE 1—BEAD UNSEATING FIXTURE—DIMENSIONS IN INCHES

FIGURES TO STANDARD 109

Wheel sizes	Dimension "A" for tires with maximum inflation pressure	
	Other than 60 lbs/in^2	60 lbs/in^2
19	13.00	12.00
18	12.50	11.40
17	12.00	10.60
16	11.50	9.90
15	11.00	9.40
14	10.50	8.90
13	10.00	8.40
12	9.50	.....
11	9.00	.....
10	8.50	.....
320mm	8.50	.....
340mm	9.00	.....
345mm	9.25	.....
365mm	9.75	.....
370mm	10.00	.....
390mm	11.00	.....
415mm	11.50	.....
400mm(1)	10.25	.....
425mm(1)	10.75	.....
450mm(1)	11.25	.....
475mm(1)	11.75	.....
500mm(1)	12.25	.....

(1) for CT tires only.

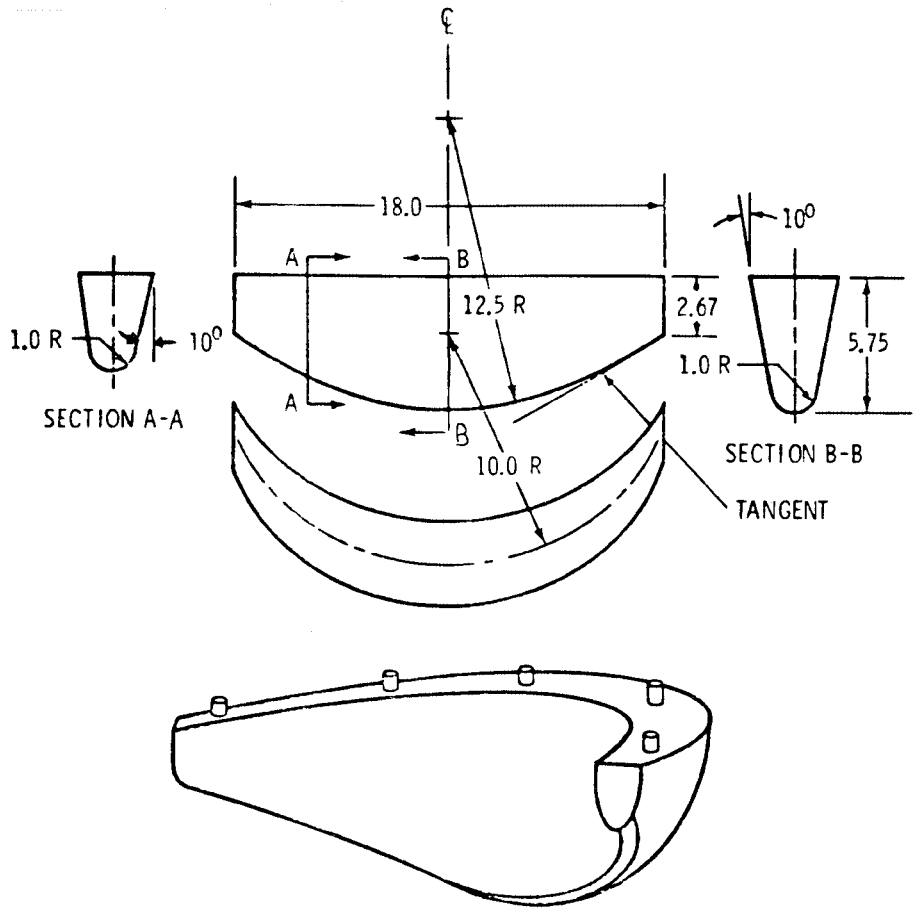

MATERIAL: Cast Aluminum 355
T-6 Condition
Finish-50 Micro Inch

FIGURE 2 — Diagram of Bead Unseating Block Dimensions in Inches

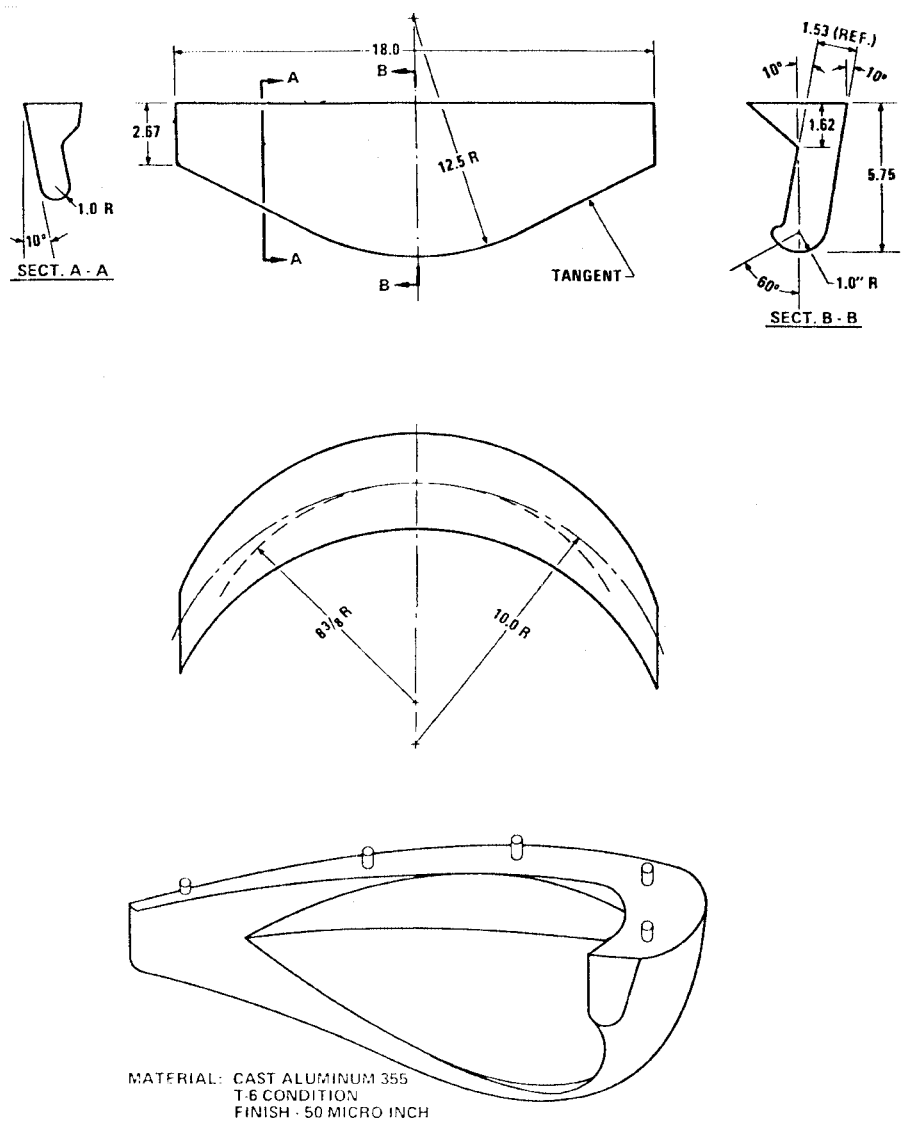

FIGURE 2A — DIAGRAM OF BEAD UNSEATING BLOCK
DIMENSIONS IN INCHES

APPENDIX A—FEDERAL MOTOR VEHICLE SAFETY STANDARD NO. 109

The following tables list tire sizes and tire constructions with proper load and inflation values. The tables group tires of related constructions and load/inflation values. Persons requesting the addition of new tire sizes to the tables or the addition of tables for new tire constructions may, when the additions requested are compatible with existent groupings, or when adequate justification for

new tables exists, submit five (5) copies of information and data supporting the request to the Vehicle Dynamics Division, Office of Crash Avoidance Standards, National Highway Traffic Safety Administration, 400 Seventh Street SW., Washington, DC 20590.

The information should contain the following:

1. The tire size designation, and a statement either that the tire is an addition to a category of tires listed in the tables or that it is in a new category for which a table has not been deloped.

2. The tire dimensions, including aspect ratio, size factor, section width, overall width, and test rim size.

3. The load-inflation schedule of the tire.

4. A statement as to whether the tire size designation and load inflation schedule has been coordinated with the Tire and Rim Association, the European Tyre and Rim Technical Organisation, the Japan Automobile Tire Manufacturers' Association, Inc., the Deutsche Industrie Norm, the British Standards Institution, the Scandinavian Tire and Rim Organization, and the Tyre and Rim Association of Australia.

5. Copies of test data sheets showing test conditions, results and conclusions obtained for individual tests specified in § 571.109.

6. Justification for the additional tire sizes.

TABLE I–A—FOR BIAS PLY TIRES WITH DESIGNATED SECTION WIDTH OF 6 INCHES AND ABOVE

Cord Material	Maximum permissible inflation						
	32 lb/in²	36 lb/in²	40 lb/in²	240 kPa	280 kPa	300 kPa	340 kPa
Rayon (in-lbs)	1,650	2,574	3,300	1,650	3,300	1,650	3,300
Nylon or polyester (in-lbs)	2,600	3,900	5,200	2,600	5,200	2,600	5,200

TABLE I–B—FOR BIAS PLY TIRES WITH DESIGNATED SECTION WIDTH BELOW 6 INCHES

Cord Material	Maximum permissible inflation						
	32 lb/in²	36 lb/in²	40 lb/in²	240 kPa	280 kPa	300 kPa	340 kPa
Rayon (in-lbs)	1,000	1,875	2,500	1,000	2,500	1,000	2,500
Nylon or polyester (in-lbs)	1,950	2,925	3,900	1,950	3,900	1,950	3,900

TABLE I–C—FOR RADIAL PLY TIRES

Size Designation	Maximum Permissible Inflation											
	Tires other than CT tires								CT Tires			
	psi			kPa					kPa			
	32	36	40	240	280	300	340	350	290	330	350	390
Below 160mm (in-lbs)	1,950	2,925	3,900	1,950	3,900	1,950	3,900	1,950	1,950	3,900	1,950	3,900
160mm or above (in-lbs)	2,600	3,900	5,200	2,600	5,200	2,600	5,200	2,600	2,600	5,200	2,600	5,200

TABLE I–D—FOR TIRES WITH 60 LB/IN² MAXIMUM PERMISSIBLE INFLATION PRESSURE AND MAXIMUM LOAD RATING BELOW 880 LB. AND ABOVE

Cord material	Inch-pounds
Rayon	1,650
Nylon or polyester	2,600

TABLE I–E—FOR TIRES WITH 60 LB/IN² MAXIMUM PERMISSIBLE INFLATION PRESSURE AND MAXIMUM LOAD RATING BELOW 880 LB.

Cord material	Inch-pounds
Rayon	1,000

TABLE I–E—FOR TIRES WITH 60 LB/IN² MAXIMUM PERMISSIBLE INFLATION PRESSURE AND MAXIMUM LOAD RATING BELOW 880 LB.—Continued

Cord material	Inch-pounds
Nylon or polyester	1,950

TABLE II—TEST INFLATION PRESSURES

[Maximum permissible inflation pressure to be used for the following test]

Test type	Tires other than CT tires									CT tires			
	psi				kPa					kPa			
	32	36	40	60	240	280	300	340	350	290	300	350	390
Physical dimensions, bead unseating, tire strength, and tire endurance	24	28	32	52	180	220	180	220	180	230	270	230	270
High speed performance	30	34	38	58	220	260	220	260	220	270	310	270	310

[38 FR 30235, Nov. 1, 1973]

EDITORIAL NOTE: For FEDERAL REGISTER citations affecting §571.109, see the List of CFR Sections Affected, which appears in the Finding Aids section of the printed volume and on GPO Access.

EFFECTIVE DATE NOTE: At 63 FR 28914, May 27, 1998, §571.109 was amended by revising in S4.2.1, paragraph (d); revising S4.2.2.3.1; revising S4.2.2.3.2; revising the first sentence of S4.3 *Labeling Requirements* introductory paragraph; revising the first sentence of S4.3.5; revising S5.2.2.1; revising S5.3.2.1; revising S5.3.2.3; revising S5.4.1.2; revising S5.4.2.1; revising S5.4.2.2; revising S5.4.2.3; revising S5.5.2; revising S5.5.3; and revising S5.5.4; by revising Figure 1—''Bead Unseating Fixture—Dimensions in Inches'', the Table titled ''Figures for Standard No. 109'', Figure 2—''Diagram of Beat Unseating Block Dimensions in Inches'', and Figure 2A—''Diagram of Bead Unseating Block—Dimensions in Inches'' after S6, and preceding Appendix A; by revising in Appendix A, Table 1–A—''For Bias Ply Tires with Designated Section Width of 6 Inches and Above'', Table 1–B ''For Bias Ply Tires with Designated Section Width Below 6 Inches'', Table 1–C ''For Radial Ply Tires'', Table 1–D ''For Tires with 60 lb/in² Maximum Permissible Inflation Pressure and Maximum Load Rating Below 880 Lb. And Above'', and Table 1–E ''For Tires With 60 lb/in² Maximum Permissible Inflation Pressure and Maximum Load Rating Below 880 Lb'', effective May 27, 2003. For the convenience of the user, the revised material is set forth as follows:

§571.109 Standard No. 109, New pneumatic tires.

* * * * *

S4.2.1. *General.* Each tire shall conform to each of the following:

* * * * *

(d) It shall incorporate a tread wear indicator that will provide a visual indication that the tire has worn to a tread depth of 1.6 mm (1/16 inch).

* * * * *

S4.2.2.3.1 When a tubeless tire that has a maximum inflation pressure other than 420 kPa (60 psi) is tested in accordance with S5.2, the applied force required to unseat the tire bead at the point of contact shall be not less than:

(a) 6,670 N (1,500 pounds) for tires with a designated section width of less than 160 mm (6 inches);

(b) 8,890 N (2,000 pounds) for tires with a designated section width of 160 mm (6 inches) or more but less than 205 mm (8 inches);

(c) 11,120 N (2,500 pounds) for tires with a designated section width of 205 mm (8 inches) or more, using the section width specified in a submission made by an individual manufacturer, pursuant to S4.4.1(a), or in one of the publications described in S4.4.1(b) for the applicable tire size designation and type.

S4.2.2.3.2 When a tire that has a maximum inflation pressure of 420 kPa (60 psi) is tested in accordance with S5.2, the applied force required to unseat the bead at the point of contact shall be not less than:

(a) 6,670 N (1,500 pounds) for tires with a maximum load rating of less than 399 kg (880 pounds);

(b) 8,890 N (2,000 pounds) for tires with a maximum load rating of 399 kg (880 pounds) or more but less than 635 kg (1,400 pounds);

(c) 11,120 N (2,500 pounds) for tires with a maximum load rating of 635 kg (1,400 pounds)

or more, using the maximum load rating marked on the sidewall of the tire.

* * * * *

S4.3 *Labeling Requirements.* Except as provided in S4.3.1 and S4.3.2, each tire shall have permanently molded into or onto both sidewalls, in letters and numerals not less than 2 mm (0.078 inches) high, the information shown in paragraphs S4.3 (a) and (g). * * *

* * * * *

S4.3.5 If the maximum inflation pressure of a tire is 420 kPa (60 psi), the tire shall have permanently molded into or onto both sidewalls, in letters and numerals not less than 12.7 mm (½ inch), the words ''Inflate to 420 kPa (60 psi)''. * * *

* * * * *

S5.2.2.1 Apply a load through the block to the tire's outer sidewall at the distance specified in Figure 1 for the applicable wheel size at a rate of 50 mm (2 inches) per minute, with the load arm substantially parallel to the tire and rim assembly at the time of engagement.

* * * * *

S5.3.2.1 Force a 19 mm (¾ inch) diameter cylindrical steel plunger with a hemispherical end perpendicularly into the tread rib as near to the centerline as possible, avoiding penetration into the tread groove, at the rate of 50 mm (2 inches) per minute.

* * * * *

S5.3.2.3 Compute the breaking energy for each test point by means of one of the two following formulas:

$W=[(F\times P)/2]\times 10^{\times 3}$ (joules)

Where
W=Energy, in joules;
F=Force, Newtons; and
P=Penetration, mm; or

$W=[(F\times P)/2]$

Where
W=Energy, inch-pounds;
F=Force, pounds; and
P=Penetration, inches.

* * * * *

S5.4.1.2 Condition the tire assembly to 38°±3 °C (100°±5 °F) for at least three hours.

* * * * *

S5.4.2.1 Mount the tire and wheel assembly on a test axle and press it against a flat-faced steel test wheel 1708 mm (67.23 inches) in diameter and at least as wide as the section width of the tire to be tested or an approved equivalent test wheel, with the applicable test load specified in the table in S5.4.2.3 for the tire's size designation, type and maximum permissible inflation pressure.

S5.4.2.2 During the test, the air surrounding the test area shall be 38°±3 °C (100°±5 °F).

S5.4.2.3 Conduct the test at 80 kilometers per hour (km/h)(50 miles per hour) in accordance with the following schedule without pressure adjustment or other interruptions:

The loads for the following periods are the specified percentage of the maximum load rating marked on the tire sidewall:

	Percent
4 hours	85
6 hours	90
24 hours	100

* * * * *

S5.5.2 Break in the tire by running it for 2 hours at 80 km/h (50 mph).

S5.5.3 Allow to cool to 38°±3 °C (100°±5 °F) and readjust the inflation pressure to the applicable pressure specified in Table II.

S5.5.4 Without readjusting inflation pressure, test at 121 km/h (75 mph) for 30 minutes, 129 km/h (80 mph) for 30 minutes, and 137 km/h (85 mph) for 30 minutes.

* * * * *

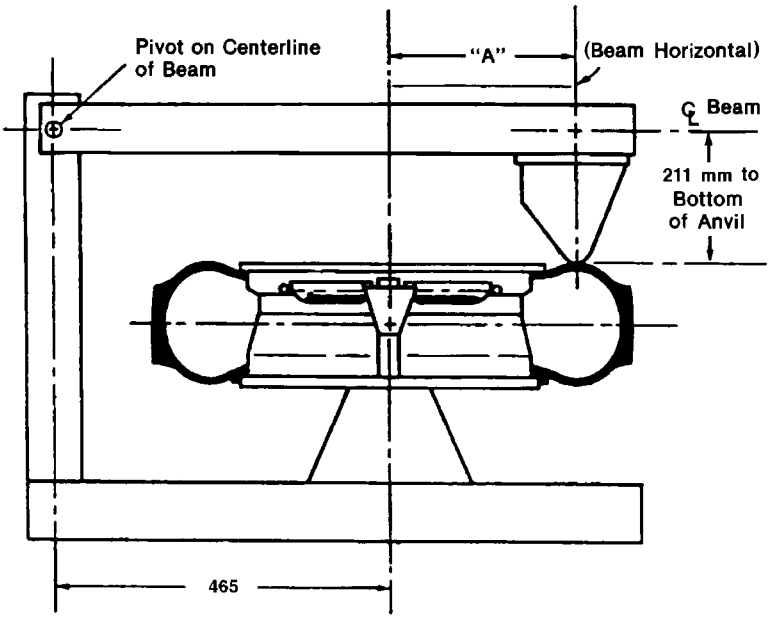

Figure 1.—Bead Unseating Fixture
All Dimensions in Millimeters (mm)

FIGURES FOR STANDARD 109

Wheel sizes	Dimension "A" for tires with maximum inflation pressure			
	Other than 60 psi	Other than 420 kPa	60 psi	420 kPa
19	13.00 in	330	12.00 in	305
18	12.50 in	318	11.40 in	290
17	12.00 in	305	10.60 in	269
16	11.50 in	292	9.90 in	251
15	11.00 in	279	9.40 in	239
14	10.50 in	267	8.90 in	226
13	10.00 in	254	8.40 in	213
12	9.50 in	241		
11	9.00 in	229		
10	8.50 in	216		
320	8.50 in	216		
340	9.00 in	229		
345	9.25 in	235		
365	9.75 in	248		
370	10.00 in	254		
390	11.00 in	279		
415	11.50 in	292		
400[1]	10.25 in	260		
425[1]	10.75 in	273		
450[1]	11.25 in	286		
475[1]	11.75 in	298		
500[1]	12.25 in	311		

[1] For CT Tires only.

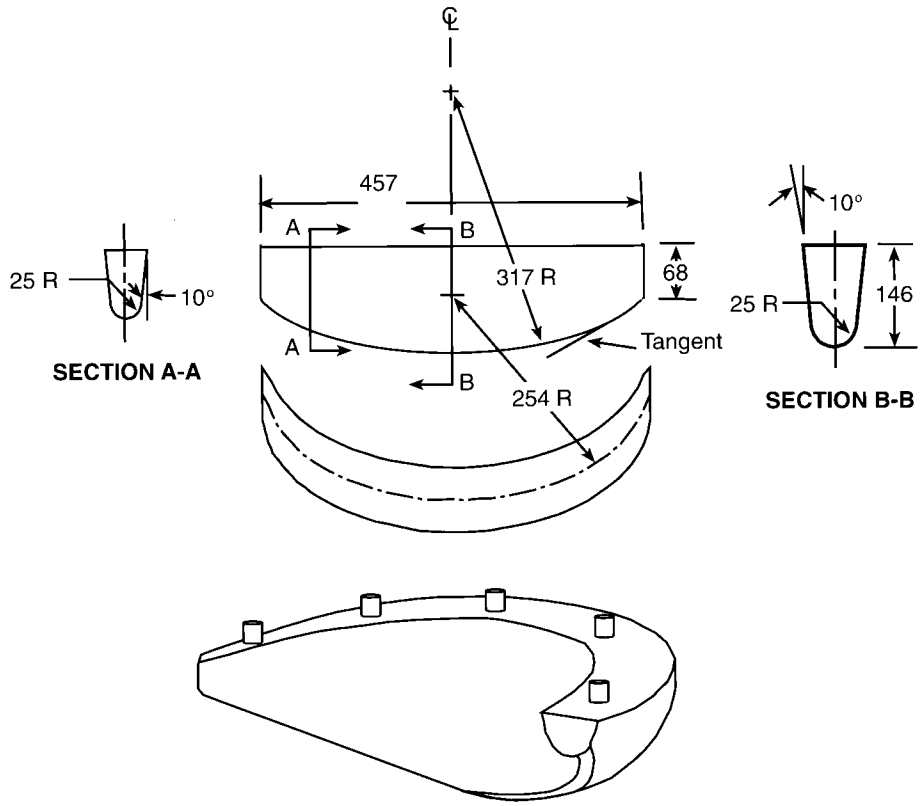

MATERIAL: Cast Aluminum 355
T-6 Condition
Finish-1.3 Micrometer (um)

Figure 2. DIAGRAM OF BEAD UNSEATING BLOCK
All dimensions in millimeters (mm)

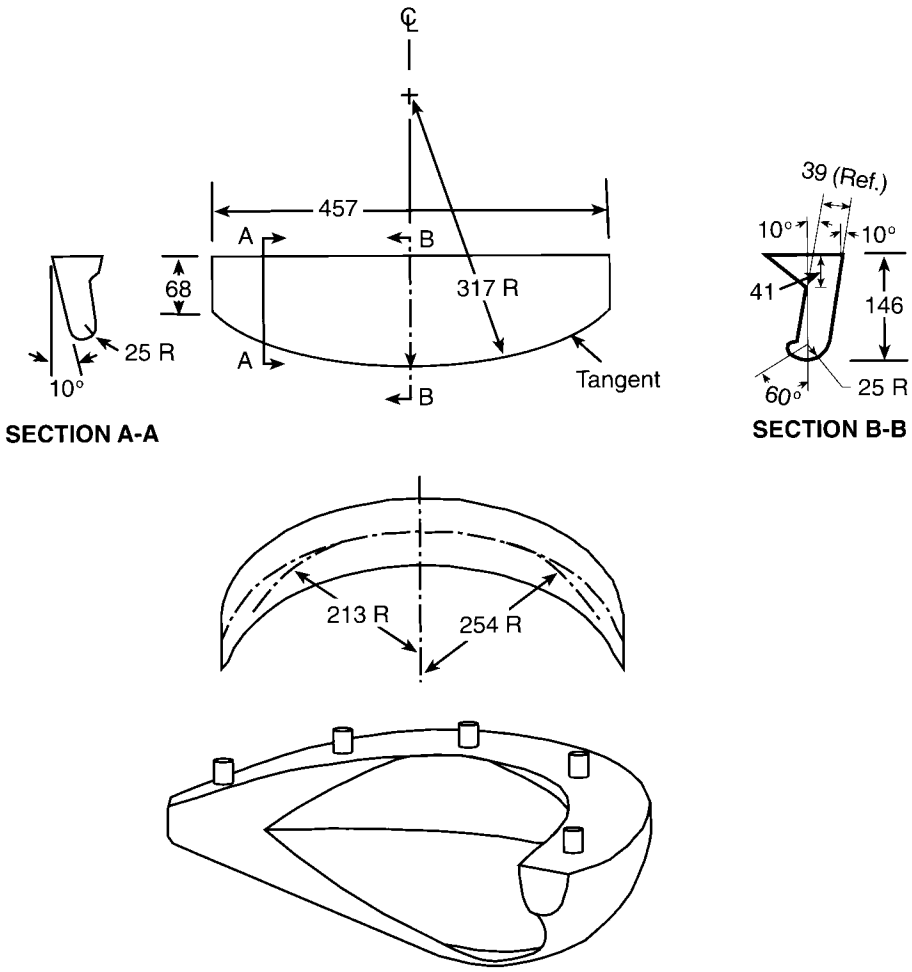

MATERIAL: Cast Aluminum 355
T-6 Condition
Finish-1.3 Micrometer (um)

Figure 2A. DIAGRAM OF BEAD UNSEATING BLOCK
All dimensions in millimeters (mm)

TABLE I–A.—FOR BIAS PLY TIRES WITH DESIGNATED SECTION WIDTH OF 152 MM (6 INCHES) AND ABOVE

Cord material	32 psi	36 psi	40 psi	240 kPa	280 kPa	300 kPa	340 kPa
Rayon:							
(in-lbs)	1,650	2,574	3,300	1,650	3,300	1,650	3,300
(joules)	186	291	373	186	373	186	373
Nylon or polyester:							
(in-lbs)	2,600	3,900	5,200	2,600	5,200	2,600	5,200
(joules)	294	441	588	294	588	294	588

TABLE I–B.—FOR BIAS PLY TIRES WITH DESIGNATED SECTION WIDTH BELOW 152 MM (6 INCHES)

Cord material	32 psi	36 psi	40 psi	240 kPa	280 kPa	300 kPa	340 kPA
Rayon:							
(in-lbs)	1,000	1,875	2,500	1,000	2,500	1,000	2,500
(joules)	113	212	282	113	282	113	282
Nylon or polyester:							
(in-lbs)	1,950	2,925	3,900	1,950	3,900	1,950	3,900
(joules)	220	330	441	220	441	220	441

TABLE I–C.—FOR RADIAL PLY TIRES

Size designation	Maximum permissible inflation											
	Tires other than CT tires								CT tires			
	psi			kPa					kPa			
	32	36	40	240	280	300	340	350	290	330	350	390
Below 160 mm:												
(in-lbs)	1,950	2,925	3,900	1,950	3,900	1,950	3,900	1,950	1,950	3,900	1,950	3,900
(joules)	220	330	441	220	441	220	441	220	220	441	220	441
160 mm or above:												
(in-lbs)	2,600	3,900	5,200	2,600	5,200	2,600	5,200	2,600	2,600	5,200	2,600	5,200
(joules)	294	441	588	294	588	294	588	294	294	588	294	588

TABLE I–D.—FOR TIRES WITH 420 KPA (60 PSI) MAXIMUM PERMISSIBLE INFLATION PRESSURE AND MAXIMUM LOAD RATING 399 KG (880 LB) AND ABOVE

Cord material	Inch-pounds joules (J)
Rayon	1,650 inch pounds 186 joules (J).
Nylon or Polyester	2,600 inch pounds 294 joules (J).

TABLE I–E.—FOR TIRES WITH 420 KPA (60 PSI) MAXIMUM PERMISSIBLE INFLATION PRESSURE AND MAXIMUM LOAD RATING BELOW 399 KG (880 LB)

Cord material	Inch-pounds joules (J)
Rayon	1,000 inch pounds 113 joules (J).
Nylon or Polyester	1,950 inch pounds 220 joules (J).

§ 571.110 Standard No. 110; Tire selection and rims.

S1. *Purpose and scope*. This standard specifies requirements for tire selection to prevent tire overloading.

S2. *Application*. This standard applies to passenger cars and to non-pneumatic spare tire assemblies for use on passenger cars.

S3. *Definitions*.

Accessory weight means the combined weight (in excess of those standard items which may be replaced) of automatic transmission, power steering, power brakes, power windows, power seats, radio, and heater, to the extent that these items are available as factory-installed equipment (whether installed or not).

Curb weight means the weight of a motor vehicle with standard equipment

including the maximum capacity of fuel, oil, and coolant, and, if so equipped, air conditioning and additional weight optional engine.

Maximum loaded vehicle weight means the sum of—

(a) Curb weight;

(b) Accessory weight;

(c) Vehicle capacity weight; and

(d) Production options weight.

Non-pneumatic rim is used as defined in §571.129.

Non-pneumatic spare tire assembly means a non-pneumatic tire assembly intended for temporary use in place of one of the pneumatic tires and rims that are fitted to a passenger car in compliance with the requirements of this standard.

Non-pneumatic tire and *non-pneumatic tire assembly* are used as defined in §571.129.

Normal occupant weight means 68 kilograms times the number of occupants specified in the second column of Table I.

Occupant distribution means distribution of occupants in a vehicle as specified in the third column of Table I.

Production options weight means the combined weight of those installed regular production options weighing over 2.3 kilograms in excess of those standard items which they replace, not previously considered in curb weight or accessory weight, including heavy duty brakes, ride levelers, roof rack, heavy duty battery, and special trim.

Rim is used as defined in §571.109.

Vehicle capacity weight means the rated cargo and luggage load plus 68 kilograms times the vehicle's designated seating capacity.

Vehicle maximum load on the tire means that load on an individual tire that is determined by distributing to each axle its share of the maximum loaded vehicle weight and dividing by two.

Vehicle normal load on the tire means that load on an individual tire that is determined by distributing to each axle its share of the curb weight, accessory weight, and normal occupant weight (distributed in accordance with Table I) and dividing by 2.

Wheel center member is used as defined in §571.129.

S4. *Requirements.*

S4.1 *General.* Passenger cars shall be equipped with tires that meet the requirements of §571.109, *New Pneumatic Tires—Passenger Cars*, except that passenger cars may be equipped with a non-pneumatic spare tire assembly that meets the requirements of §571.129, *New Non-Pneumatic Tires for Passenger Cars* and S6 and S8 of this standard. Passenger cars equipped with such an assembly shall meet the requirements of S4.3(e), S5, and S7 of this standard.

S4.2 *Tire load limits.*

S4.2.1 The vehicle maximum load on the tire shall not be greater than the applicable maximum load rating as marked on the sidewall of the tire.

S4.2.2 The vehicle normal load on the tire shall not be greater than the test load used in the high speed performance test specified in S5.5 of §571.109 for that tire.

S4.3 *Placard.* A placard, permanently affixed to the glove compartment door or an equally accessible location, shall display the—

(a) Vehicle capacity weight;

(b) Designated seating capacity (expressed in terms of total number of occupants and in terms of occupants for each seat location);

(c) Vehicle manufacturer's recommended cold tire inflation pressure for maximum loaded vehicle weight and, subject to the limitations of S4.3.1, for any other manufacturer-specified vehicle loading condition;

(d) Vehicle manufacturer's recommended tire size designation; and

(e) For a vehicle equipped with a non-pneumatic spare tire assembly, the non-penumatic tire identification code with which that assembly is labeled pursuant to the requirements of S4.3(a) of §571.129, *New Non-Pneumatic Tires for Passenger Cars*.

S4.3.1 No inflation pressure other than the maximum permissible inflation pressure may be specified unless—

(a) It is less than the maximum permissible inflation pressure;

(b) The vehicle loading condition for that pressure is specified; and

(c) The tire load rating specified in a submission by an individual manfacturer, pursuant to S4.4.1(a) of Motor Vehicle Safety Standard No. 109, or contained in one of the publications

described in S4.4.1(b) of Motor Vehicle Safety Standard No. 109 for the tire size at that inflation pressure is not less than the vehicle load on the tire for that vehicle loading condition.

S4.4 *Rims*.

S4.4.1 *Requirements*. Each rim shall:

(a) Be constructed to the dimensions of a rim that is listed pursuant to the definition of *test rim* in paragraph S3. of § 571.109 (Standard No. 109) for use with the tire size designation with which the vehicle is equipped.

(b) In the event of rapid loss of inflation pressure with the vehicle traveling in a straight line at a speed of 97 kilometers per hour, retain the deflated tire until the vehicle can be stopped with a controlled braking application.

TABLE I—OCCUPANT LOADING AND DISTRIBUTION FOR VEHICLE NORMAL LOAD FOR VARIOUS DESIGNATED SEATING CAPACITIES

Designated seating capacity, number of occupants	Vehicle normal load, number of occupants	Occupant distribution in a normally loaded vehicle
2 through 4	2	2 in front.
5 through 10	3	2 in front, 1 in second seat.

S5. *Load Limits for Non-Pneumatic Spare Tires*. The highest vehicle maximum load on the tire for the vehicle shall not be greater than the load rating for the non-pneumatic spare tire.

S6 *Labeling Requirements for Non-Pneumatic Spare Tires or Tire Assemblies*. Each non-pneumatic tire or, in the case of a non-pneumatic tire assembly in which the non-pneumatic tire is an integral part of the assembly, each non-pneumatic tire assembly shall include, in letters or numerals not less than 4 millimeters high, the information specified in paragraphs S6 (a) and (b). The information shall be permanently molded, stamped, or otherwise permanently marked into or onto the non-pneumatic tire or non-pneumatic tire assembly, or shall appear on a label that is permanently attached to the tire or tire assembly. If a label is used, it shall be subsurface printed, made of material that is resistant to fade, heat, moisture and abrasion, and attached in such a manner that it cannot be removed without destroying or defacing the label on the non-pneumatic tire or tire assembly. The information specified in paragraphs S6 (a) and (b) shall appear on both sides of the non-pneumatic tire or tire assembly, except, in the case of a non-pneumatic tire assembly which has a particular side that must always face outward when mounted on a vehicle, in which case the information specified in paragraphs S6 (a) and (b) shall only be required on the outward facing side. The information shall be positioned on the tire or tire assembly such that it is not placed on the tread or the outermost edge of the tire and is not obstructed by any portion of any non-pneumatic rim or wheel center member designated for use with that tire in this standard or in Standard No. 129.

(a) FOR TEMPORARY USE ONLY; and

(b) MAXIMUM 80 KM/H (50 M.P.H.).

S7. *Requirements for Passenger Cars Equipped with Non-Pneumatic Spare Tire Assemblies*

S7.1 *Vehicle Placarding Requirements*. A placard, permanently affixed to the inside of the vehicle trunk or an equally accessible location adjacent to the non-pneumatic spare tire assembly, shall display the information set forth in S6 in block capitals and numerals not less than 6 millimeters high preceded by the words ''IMPORTANT—USE OF SPARE TIRE'' in letters not less than 9 millimeters high.

S7.2 *Supplementary Information*. The owner's manual of the passenger car shall contain, in writing in the English language and in not less than 10 point type, the following information under the heading ''IMPORTANT—USE OF SPARE TIRE'':

(a) A statement indicating the information related to appropriate use for the non-pneumatic spare tire including at a minimum the information set forth in S6 (a) and (b) and either the information set forth in S4.3(e) or a statement that the information set forth in S4.3(e) is located on the vehicle placard and on the non-pneumatic tire;

(b) An instruction to drive carefully when the non-pneumatic spare tire is in use, and to install the proper pneumatic tire and rim at the first reasonable opportunity; and

(c) A statement that operation of the passenger car is not recommended with

more than one non-pneumatic spare tire in use at the same time.

S8. *Non-Pneumatic Rims and Wheel Center Members*

S8.1 *Non-Pneumatic Rim Requirements*. Each non-pneumatic rim that is part of a separable non-pneumatic spare tire assembly shall be constructed to the dimensions of a non-pneumatic rim that is listed pursuant to S4.4 of §571.129 for use with the non-pneumatic tire, designated by its non-pneumatic tire identification code, with which the vehicle is equipped.

S8.2 *Wheel Center Member Requirements*. Each wheel center member that is part of a separable non-pneumatic spare tire assembly shall be constructed to the dimensions of a wheel center member that is listed pursuant to S4.4 of §571.129 for use with the non-pneumatic tire, designated by its non-pneumatic tire identification code, with which the vehicle is equipped.

[36 FR 22902, Dec. 2, 1971, as amended at 37 FR 23727, Nov. 8, 1972; 40 FR 5530, Feb. 6, 1975; 47 FR 36183, Aug. 19, 1982; 49 FR 38612, Oct. 1, 1984; 55 FR 29589, July 20, 1990; 56 FR 19311, Apr. 26, 1991; 60 FR 13643, Mar. 14, 1995]

§571.111 Standard No. 111; Rearview mirrors.

S1. *Scope*. This standard specifies requirements for the performance and location of rearview mirrors.

S2. *Purpose*. The purpose of this standard is to reduce the number of deaths and injuries that occur when the driver of a motor vehicle does not have a clear and reasonably unobstructed view to the rear.

S3. *Application*. This standard applies to passenger cars, multipurpose passenger vehicles, trucks, buses, schoolbuses and motorcycles.

S4. *Definitions*.

Convex mirror means a mirror having a curved reflective surface whose shape is the same as that of the exterior surface of a section of a sphere.

Effective mirror surface means the portions of a mirror that reflect images, excluding the mirror rim or mounting brackets.

Unit magnification mirror means a plane or flat mirror with a reflective surface through which the angular height and width of the image of an object is equal to the angular height and width of the object when viewed directly at the same distance except for flaws that do not exceed normal manufacturing tolerances. For the purposes of this regulation a prismatic day-night adjustment rearview mirror one of whose positions provides unit magnification is considered a unit magnification mirror.

S5. *Requirements for passenger cars*.

S5.1 *Inside rearview mirror*. Each passenger car shall have an inside rearview mirror of unit magnification.

S5.1.1 *Field of view*. Except as provided in S5.3, the mirror shall provide a field of view with an included horizontal angle measured from the projected eye point of at least 20 degrees, and a sufficient vertical angle to provide a view of a level road surface extending to the horizon beginning at a point not greater than 61 m to the rear of the vehicle when the vehicle is occupied by the driver and four passengers or the designated occupant capacity, if less, based on an average occupant weight of 68 kg. The line of sight may be partially obscured by seated occupants or by head restraints. The location of the driver's eye reference points shall be those established in Motor Vehicle Safety Standard No. 104 (§571.104) or a nominal location appropriate for any 95th percentile male driver.

S5.1.2 *Mounting*. The mirror mounting shall provide a stable support for the mirror, and shall provide for mirror adjustment by tilting in both the horizontal and vertical directions. If the mirror is in the head impact area, the mounting shall deflect, collapse or break away without leaving sharp edges when the reflective surface of the mirror is subjected to a force of 400 N in any forward direction that is not more than 45° from the forward longitudinal direction.

S5.2 *Outside rearview mirror—driver's side*.

S5.2.1 *Field of view*. Each passenger car shall have an outside mirror of unit magnification. The mirror shall provide the driver a view of a level road surface extending to the horizon from a line, perpendicular to a longitudinal plane tangent to the driver's side of the vehicle at the widest point, extending 2.4 m out from the tangent plane 10.7 m behind the driver's eyes, with the seat

in the rearmost position. The line of sight may be partially obscured by rear body or fender contours. The location of the driver's eye reference points shall be those established in Motor Vehicle Safety Standard No. 104 (§ 571.104) or a nominal location appropriate for any 95th percentile male driver.

S5.2.2 *Mounting.* The mirror mounting shall provide a stable support for the mirror, and neither the mirror nor the mounting shall protrude farther than the widest part of the vehicle body except to the extent necessary to produce a field of view meeting or exceeding the requirements of S5.2.1. The mirror shall not be obscured by the unwiped portion of the windshield, and shall be adjustable by tilting in both horizontal and vertical directions from the driver's seated position. The mirror and mounting shall be free of sharp points or edges that could contribute to pedestrian injury.

S5.3 *Outside rearview mirror passenger's side.* Each passenger car whose inside rearview mirror does not meet the field of view requirements of S5.1.1 shall have an outside mirror of unit magnification or a convex mirror installed on the passenger's side. The mirror mounting shall provide a stable support and be free of sharp points or edges that could contribute to pedestrian injury. The mirror need not be adjustable from the driver's seat but shall be capable of adjustment by tilting in both horizontal and vertical directions.

S5.4 *Convex mirror requirements.* Each motor vehicle using a convex mirror to meet the requirements of S5.3 shall comply with the following requirements:

S5.4.1 When each convex mirror is tested in accordance with the procedures specified in S12. of this standard, none of the radii of curvature readings shall deviate from the average radius of curvature by more than plus or minus 12.5 percent.

S5.4.2 Each convex mirror shall have permanently and indelibly marked at the lower edge of the mirror's reflective surface, in letters not less than 4.8 mm nor more than 6.4 mm high the words ''Objects in Mirror Are Closer Than They Appear.''

S5.4.3 The average radius of curvature of each such mirror, as determined by using the procedure in S12., shall be not less than 889 mm and not more than 1,651 mm.

S6. *Requirements for multipurpose passenger vehicles, trucks, and buses, other than school buses, with GVWR of 4,536 kg or less.*

S6.1 Each multipurpose passenger vehicle, truck and bus, other than a school bus, with a GVWR of 4,536 kg or less shall have either—

(a) Mirrors that conform to the requirements of S5.; or

(b) Outside mirrors of unit magnification, each with not less than 126 cm^2 of reflective surface, installed with stable supports on both sides of the vehicle, located so as to provide the driver a view to the rear along both sides of the vehicle, and adjustable in both the horizontal and vertical directions to view the rearward scene.

S7. *Requirements for multipurpose passenger vehicles and trucks with a GVWR of more than 4,536 kg and less than 11,340 kg and buses, other than school buses, with a GVWR of more than 4,536 kg.*

S7.1 Each multipurpose passenger vehicle and truck with a GVWR of more than 4,536 kg and less than 11,340 kg and each bus, other than a school bus, with a GVWR of more than 4,536 kg shall have outside mirrors of unit magnification, each with not less than 323 cm^2 of reflective surface, installed with stable supports on both sides of the vehicle. The mirrors shall be located so as to provide the driver a view to the rear along both sides of the vehicle and shall be adjustable both in the horizontal and vertical directions to view the rearward scene.

S8. *Requirements for multipurpose passenger vehicles and trucks with a GVWR of 11,340 kg or more.*

S8.1 Each multipurpose passenger vehicle and truck with a GVWR of 11,340 kg or more shall have outside mirrors of unit magnification, each with not less than 323 cm^2 of reflective surface, installed with stable supports on both sides of the vehicle. The mirrors shall be located so as to provide the driver a view to the rear along both sides of the vehicle and shall be adjustable both in the horizontal and vertical directions to view the rearward scene.

S9. *Requirements for School Buses.* When a school bus is tested in accordance with the procedures of S13, it shall meet the requirements of S9.1 through S9.4.

S9.1 Outside Rearview Mirrors. Each school bus shall have two outside rearview mirror systems: System A and System B.

S9.2 System A shall be located with stable supports so that the portion of the system on the bus's left side, and the portion on its right side, each:

(a) Includes at least one mirror of unit magnification with not less than 323 cm^2 of reflective surface; and

(b) Includes one or more mirrors which together provide, at the driver's eye location, a view of:

(1) For the mirror system on the right side of the bus, the entire top surface of cylinder N in Figure 2, and of that area of the ground which extends rearward from the mirror surface not less than 61 meters.

(2) Each mirror shall be located such that the distance from the center point of the eye location of a 25th percentile adult female seated in the driver's seat to the center of the mirror shall be at least 95 cm.

S9.3(a) For each of the cylinders A though P whose entire top surface is not directly visible from the driver's eye location, System B shall provide, at that location:

(1) A view of the entire top surface of that cylinder.

(2) A view of the ground that overlaps with the view of the ground provided by System A.

(b) Each mirror installed in compliance with S9.3(a) shall meet the following requirements:

(1) Each mirror shall have a projected area of at least 258 cm^2, as measured on a plane at a right angle to the mirror's axis.

(2) Each mirror shall be located such that the distance from the center point of the eye location of a 25th percentile adult female seated in the driver's seat to the center of the mirror shall be at least 95 cm^2.

(3) Each mirror shall have no discontinuities in the slope of the surface of the mirror.

(4) Each mirror shall be installed with a stable support.

(c) Each school bus which has a mirror installed in compliance with S9.3(a) that has an average radius of curvature of less than 889 mm, as determined under S12, shall have a label visible to the seated driver. The label shall be printed in a type face and color that are clear and conspicuous. The label shall state the following:

''USE CROSS VIEW MIRRORS TO VIEW PEDESTRIANS WHILE BUS IS STOPPED. DO NOT USE THESE MIRRORS TO VIEW TRAFFIC WHILE BUS IS MOVING. IMAGES IN SUCH MIRRORS DO NOT ACCURATELY SHOW ANOTHER VEHICLE'S LOCATION.''

S9.4(a) Each image required by S9.3(a)(1) to be visible at the driver's eye location shall be separated from the edge of the effective mirror surface of the mirror providing that image by a distance of not less than 3 minutes of arc.

(b) The image required by S9.3(a)(1) of cylinder P shall meet the following requirements:

(1) The angular size of the shortest dimension of that cylinder's image shall be not less than 3 minutes of arc; and

(2) The angular size of the longest dimension of that cylinder's image shall be not less than 9 minutes of arc.

S10. *Requirements for motorcycles.*

S10.1 Each motorcycle shall have either a mirror of unit magnification with not less than 8065 mm^2 of reflective surface, or a convex mirror with not less than 6450 mm^2 of reflective surface and an average radius of curvature not less than 508 mm and not greater than 1524 mm, installed with a stable support, and mounted so that the horizontal center of the reflective surface is at least 279 mm outward of the longitudinal centerline of the motorcycle. The mirror shall be adjustable by tilting in both the horizontal and vertical directions.

S11. *Mirror Construction.* The average reflectance of any mirror required by this standard shall be determined in accordance with SAE Recommended Practice J964, OCT84. All single reflectance mirrors shall have an average reflectance of at least 35 percent. If a mirror is capable of multiple reflectance levels, the minimum reflectance level in the day mode shall be at least

35 percent and the minimum reflectance level in the night mode shall be at least 4 percent. A multiple reflectance mirror shall either be equipped with a means for the driver to adjust the mirror to a reflectance level of at least 35 percent in the event of electrical failure, or achieve such reflectance level automatically in the event of electrical failure.

S12. *Determination of radius of curvature.*

S12.1 To determine the average radius of curvature of a convex mirror, use a 3-point linear spherometer, which meets the requirements of S12.2, at the 10 test positions shown in Figure 1 and record the readings for each position.

S12.2 The 3-point linear spherometer has two outer fixed legs 38 mm apart and one inner movable leg at the midpoint. The spherometer has a dial indicator with a scale that can be read accurately to .0025 mm, with the zero reading being a flat surface.

S12.3 The 10 test positions on the image display consist of two positions at right angles to each other at each of five locations as shown in Figure 1. The locations are at the center of the mirror, at the left and right ends of a horizontal line that bisects the mirror and at the top and bottom ends of a vertical line that bisects the mirror. None of the readings are within a 6.4 mm border on the edge of the image display.

S12.4 At each position, the spherometer is held perpendicular to the convex mirror-surface and a record is made of the reading on the dial indicator to the nearest .0025 mm.

S12.5 Convert the dial reading data for each of the 10 test positions to radius of curvature calculations using Table I. Consider the change as linear for dial readings that fall between two numbers in Table I.

S12.6 Calculate the average radius of curvature by adding all 10 radius of curvature calculations and dividing by ten.

S12.7 Determine the numerical difference between the average radius of curvature and each of the 10 individual radius of curvature calculations determined in S12.5.

S12.8 Calculate the greatest percentage deviation by dividing the greatest numerical difference determined in S12.7 by the average radius of curvature and multiply by 100.

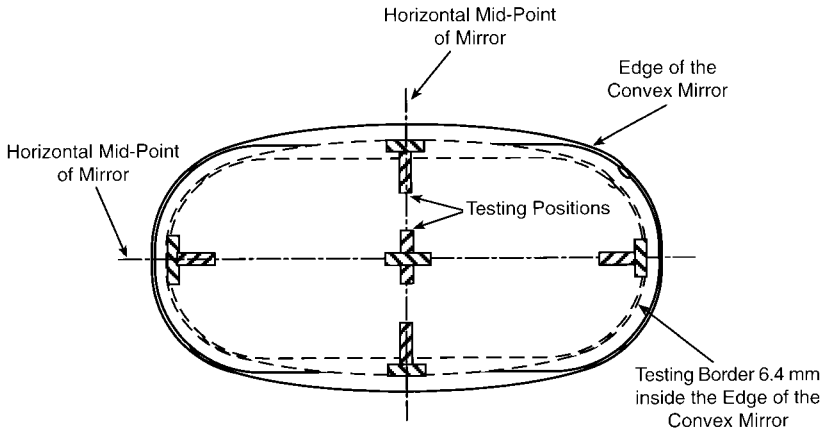

Figure 1–LOCATION OF TEN CONVEX MIRROR TESTING POSITIONS
All dimensions in millimeters (mm)

TABLE I.—CONVERSION TABLE FROM SPHEROMETER DIAL READING TO RADIUS OF CURVATURE

Dial reading	Radius of curvature (Inches)	Radius of curvature (mm)
.00330	85.2	2164.1
.00350	80.4	2042.92
.00374	75.2	1910.1
.00402	70.0	1778.0
.00416	67.6	1717.0
.00432	65.1	1653.5
.00450	62.5	1587.5
.00468	60.1	1526.5
.00476	59.1	1501.1
.00484	58.1	1475.7
.00492	57.2	1452.9
.00502	56.0	1422.4
.00512	54.9	1394.5
.00522	53.9	1369.1
.00536	52.5	1333.5
.00544	51.7	1313.2
.00554	50.8	1290.3
.00566	49.7	1262.4
.00580	48.5	1231.9
.00592	47.5	1206.5
.00606	46.4	1178.6
.00622	45.2	1148.1
.00636	44.2	1122.7
.00654	43.0	1092.2
.00668	42.1	1069.3
.00686	41.0	1041.4
.00694	40.5	1028.7
.00720	39.1	993.1
.00740	38.0	965.2
.00760	37.0	939.8
.00780	36.1	916.9
.00802	35.1	891.5
.00822	34.2	868.7
.00850	33.1	840.7
.00878	32.0	812.8
.00906	31.0	787.4
.00922	30.5	774.7
.00938	30.0	762.0
.00960	29.3	744.2
.00980	28.7	729.0
.01004	28.0	711.2
.01022	27.5	698.5
.01042	27.0	685.8
.01060	26.5	673.1
.01080	26.0	660.4
.01110	25.3	642.6
.01130	24.9	632.5
.01170	24.0	609.6
.01200	23.4	594.4
.01240	22.7	576.6
.01280	22.0	558.8
.01310	21.5	546.1
.01360	20.7	525.8
.01400	20.1	510.5
.01430	19.7	500.4
.01480	19.0	482.6
.01540	18.3	464.8
.01570	17.9	454.7
.01610	17.5	444.5
.01650	17.1	434.3
.01700	16.6	421.6
.01750	16.1	408.9
.01800	15.6	396.2
.01860	15.1	383.5
.01910	14.7	373.4
.01980	14.2	360.7
.02040	13.8	350.5
.02100	13.4	340.4

TABLE I.—CONVERSION TABLE FROM SPHEROMETER DIAL READING TO RADIUS OF CURVATURE—Continued

Dial reading	Radius of curvature (Inches)	Radius of curvature (mm)
.02160	13.0	330.2
.02250	12.5	317.5
.02340	12.0	304.8
.02450	11.5	292.1
.02560	11.0	279.4
.02680	10.5	266.7
.02810	10.0	254.0
.02960	9.5	241.3
.03130	9.0	228.6
.03310	8.5	215.9

S13. *School bus mirror test procedures.* The requirements of S9.1 through S9.4 shall be met when the vehicle is tested in accordance with the following conditions.

S13.1 The cylinders shall be a color which provides a high contrast with the surface on which the bus is parked.

S13.2 The cylinders are 0.3048 m high and 0.3048 m in diameter, except for cylinder P which is 0.9144 m high and 0.3048 m in diameter.

S13.3 Place cylinders at locations as specified in S13.3(a) through S13.3(g) and illustrated in Figure 2. Measure the distances shown in Figure 2 from a cylinder to another object from the center of the cylinder as viewed from above.

(a) Place cylinders G, H, and I so that they are tangent to a transverse vertical plane tangent to the forwardmost surface of the bus's front bumper. Place cylinders D, E, F so that their centers are located in a transverse vertical plane that is 1.8288 meters (6 feet) forward of a transverse vertical plane passing through the centers of cylinders G, H, and I. Place cylinders A, B, and C so that their centers are located in a transverse vertical plane that is 3.6576 meters (12 feet) forward of the transverse vertical plane passing through the centers of cylinders G, H, and I.

(b) Place cylinders B, E, and H so that their centers are in a longitudinal vertical plane that passes through the bus's longitudinal centerline.

(c) Place cylinders A, D, and G so that their centers are in a longitudinal vertical plane that is tangent to the most outboard edge of the left side of the bus's front bumper.

(d) Place cylinders C, F, and I so that their centers are in a longitudinal vertical plane that is tangent to the most outboard edge of the right side of the bus's front bumper.

(e) Place cylinder J so that its center is in a longitudinal vertical plane 0.3048 meters (1 foot) to the left of the longitudinal vertical plane passing through the centers of cylinders A, D, and G, and is in the transverse vertical plane that passes through the centerline of the bus's front axle.

(f) Place cylinder K so that its center is in a longitudinal vertical plane 0.3048 meters (1 foot) to the right of the longitudinal vertical plane passing through the centers of cylinders C, F, and I, and is in the transverse vertical plane that passes through the centerline of the bus's front axle.

(g) Place cylinders L, M, N, O, and P so that their centers are in the transverse vertical plane that passes through the centerline of the bus's rear axle. Place cylinder L so that its center is in a longitudinal vertical plane that is 1.8288 meters (6 feet) to the left of the longitudinal vertical plane tangent to the bus's most outboard left surface (excluding the mirror system). Place cylinder M so that its center is in a longitudinal vertical plane that is 0.3048 meters (1 foot) to the left of the longitudinal vertical plane tangent to the left side of the bus. Place cylinder N so that its center is in a longitudinal vertical plane that is 0.3048 meters (1 foot) to the right of the longitudinal vertical plane tangent to the right side of the bus. Place cylinder O so that its center is in a longitudinal vertical plane that is 1.8288 meters (6 feet) to the right of the longitudinal vertical plane tangent to the right side of the bus. Place cylinder P so that its center is in a longitudinal vertical plane that is 3.6576 meters (12 feet) to the right of the longitudinal vertical plane tangent to the right side of the bus.

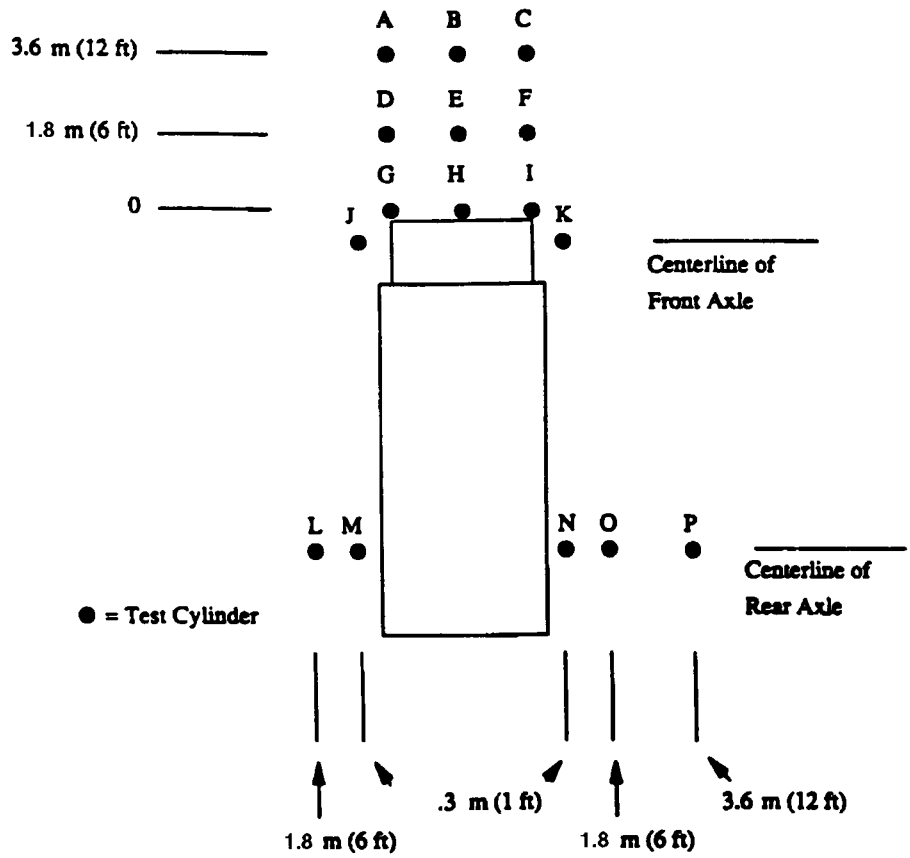

Figure 2.—Location of Test Cylinders for School Bus Field-of-View Test
All Dimensions in Meters (m)

81

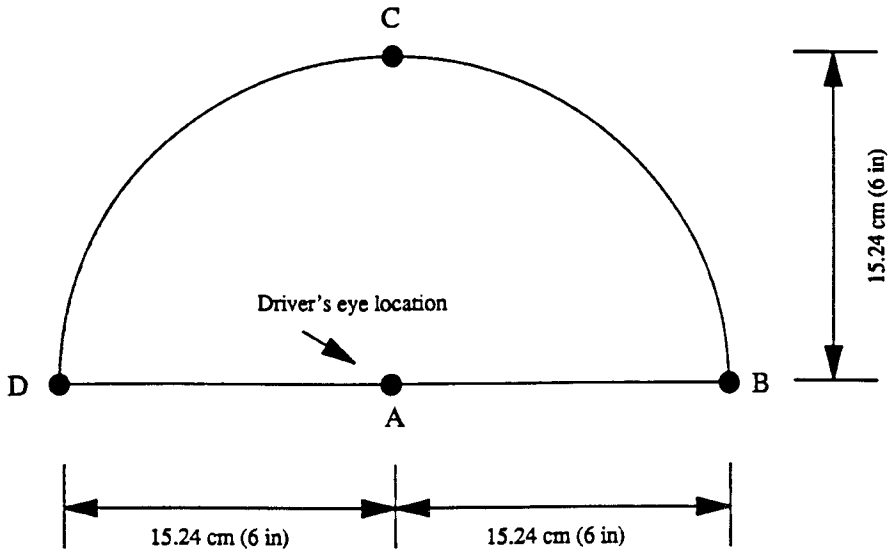

Figure 3.

Camera Locations for School Bus Field-of-View Test

S13.4 The driver's eye location is the eye location of a 25th percentile adult female, when seated in the driver's seat as follows:

(a) The center point of the driver's eye location is the point located 68.58 centimeters (27 inches) vertically above the intersection of the seat cushion and the seat back at the longitudinal centerline of the seat.

(b) Adjust the driver's seat to the midway point between the forward-most and rear-most positions, and if separately adjustable in the vertical direction, adjust to the lowest position. If an adjustment position does not

exist at the midway point, use the closest adjustment position to the rear of the midpoint. If a seat back is adjustable, adjust the seat back angle to the manufacturer's nominal design riding position in accordance with the manufacturer's recommendations.

S13.5 Adjustable mirrors are adjusted before the test in accordance with the manufacturer's recommendations. Such mirrors are not moved or readjusted at any time during the test.

13.6 Place a 35 mm or larger format camera, or video camera, so that its image plane is located at the center point of the driver's eye location or at any single point within a semicircular area established by a 15.24 centimeter (6 inch) radius parallel to and forward of the center point (see figure 3). With the camera at any single location on or within that semicircle look through the camera and the windows of the bus and determine whether the entire top surface of each cylinder is directly visible.

S13.7 For each cylinder whose entire top surface is determined under paragraph 13.4 of this section not to be directly visible at the driver's eye location,

(a) Place a comparison chart (see figure 4) above the mirror that provides the fullest view of the cylinder in situations where a cylinder is partially visible through more than one mirror.

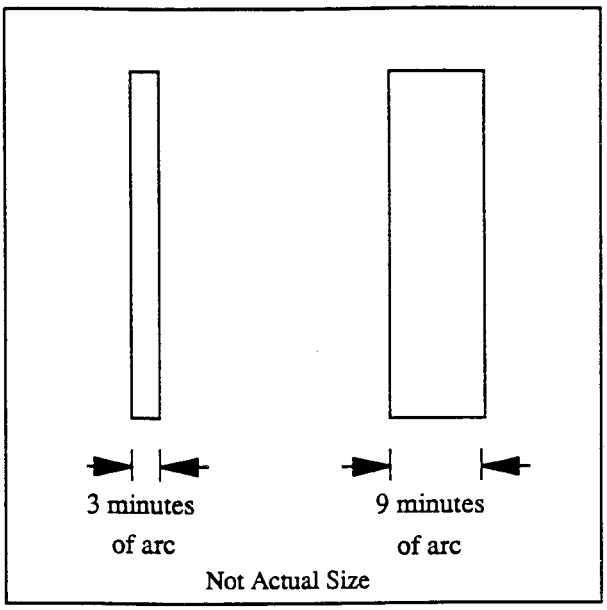

Figure 4.

Comparison Chart for Indirect Field-of-View Measurements

The width of the bars in Figure 4 indicating three minutes of arc and nine minutes of arc are derived from the following formula:

For 3 minutes of arc:

X=D×0.000873,

Where:

X=the width of a line, in the unit of measurement D, representing 3 minutes of arc;

D=distance from center point of driver's eye location to the center of the mirror's surface; and

0.000873=tangent of 3 minutes of arc.

For 9 minutes of arc:

X=D×0.002618,

Where:

X=the width of a line, in the unit of measurement D, representing 9 minutes of arc;

D=distance from center point of driver's eye location to the center of the mirror's surface; and

0.002618=tangent of 9 minutes of arc.

(b) Photograph each cylinder through the mirror(s) that provides a view of the cylinder. Photograph each cylinder with the camera located so that the view through its film or image plane is located at any single location within the semicircle established under 13.4, [POINT A,B,C, OR D] ensuring that the image of the mirror and comparison chart fill the camera's view finder to the extent possible.

13.8 Make all observations and take all photographs with the service/entry door in the closed position and the stop signal arm(s) in the fully retracted position.

[41 FR 36025, Aug. 26, 1976, as amended at 41 FR 56813, Dec. 30, 1976; 47 FR 38700, Sept. 2, 1982; 48 FR 38844, Aug. 26, 1983; 48 FR 40262, Sept. 6, 1983; 56 FR 58516, Nov. 20, 1991; 57 FR 57015, Dec. 2, 1992; 58 FR 60402, Nov. 16, 1993; 60 FR 15692, Mar. 27, 1995; 63 FR 28929-28931, May 27, 1998; 63 FR 51000, Sept. 24, 1998]

§ 571.112 [Reserved]

§ 571.113 Standard No. 113; Hood latch system.

S1. *Purpose and scope*. This standard establishes the requirement for providing a hood latch system or hood latch systems.

S2. *Application*. This standard applies to passenger cars, multipurpose passenger vehicles, trucks, and buses.

S3. *Definitions*. *Hood* means any exterior movable body panel forward of the windshield that is used to cover an engine, luggage, storage, or battery compartment.

S4. *Requirements*.

S4.1 Each hood must be provided with a hood latch system.

S4.2 A front opening hood which, in any open position, partially or completely obstructs a driver's forward view through the windshield must be provided with a second latch position on the hood latch system or with a second hood latch system.

§ 571.114 Standard No. 114; Theft protection.

S1. *Purpose and Scope*. This standard specifies requirements primarily for theft protection to reduce the incidence of crashes resulting from unauthorized operation of a motor vehicle. It also specifies requirements to reduce the incidence of crashes resulting from the rollaway of parked vehicles with automatic transmissions as a result of children moving the shift mechanism out of the ''park'' position.

S2. *Application*. This standard applies to passenger cars, and to trucks and multipurpose passenger vehicles having a GVWR of 4536 kilograms or less. However, it does not apply to walk-in van-type vehicles.

S3. *Definitions*.

Combination means one of the specifically planned and constructed variations of a locking system which, when properly actuated, permits operation of the locking system.

Key includes any other device designed and constructed to provide a method for operating a locking system which is designed and constructed to be operated by that device.

Vehicle type refers to *passenger car*, *truck*, or *multipurpose passenger vehicle*, as those terms are defined in 49 CFR 571.3.

S4. *Requirements*.

S4.1 Each truck and multipurpose passenger vehicle having a GVWR of 4536 kilograms or less and each passenger car shall meet the requirements of S4.2, S4.3, S4.4, and S4.5. However, open-body type vehicles that are manufactured for operation without doors and that either have no doors or have doors that are designed to be easily attached to and removed from the vehicle by the vehicle owner are not required to comply with S4.5.

S4.2 Each vehicle shall have a key-locking system which, whenever the key is removed, prevents:

(a) The normal activation of the vehicle's engine or motor; and

(b) Either steering or forward self-mobility of the vehicle or both.

S4.2.1 (a) Except as provided in S4.2.2 (a) and (b), the key-locking system required by S4.2 in each vehicle which has an automatic transmission with a ''park'' position shall, when tested under the procedures in S5.2, prevent removal of the key unless the transmission or transmission shift lever is locked in ''park'' or becomes locked in ''park'' as the direct result of removing the key.

(b) Each vehicle shall not move more than 150 mm on a 10 percent grade when the transmission or transmission shift lever is locked in ''park.''

S4.2.2 (a) Notwithstanding S4.2.1, provided that steering is prevented upon the key's removal, each vehicle specified therein may permit key removal when electrical failure of this system (including battery discharge) occurs or may have a device which, when activated, permits key removal. The means for activating any such device shall be covered by a non-transparent surface which, when installed, prevents sight of and activation of the device. The covering surface shall be removable only by use of a screwdriver or other tool.

(b) Notwithstanding S4.2.1, each vehicle specified therein may have a device which, when activated, permits moving the transmission shift lever from ''park'' after the removal of the key. The device shall either be operable:

(1) By the key, as defined in S3; or

(2) By another means, provided that steering is prevented when the key is removed from the ignition, and provided that the means for activating the device is covered by a non-transparent surface which, when installed, prevents sight of and activation of the device. The covering surface shall be removable only by use of a screwdriver or other tool.

S4.3 Except when an automatic transmission vehicle is in ''park,'' the means for deactivating the vehicle's engine or motor shall not activate any device installed pursuant to S4.2(b) to prevent the vehicle's steering or forward self-mobility or both.

S4.4. For each vehicle type manufactured by a manufacturer, the number of different combinations of the key-locking systems required by S4.2 shall be at least 1,000, or a number equal to the number of vehicles of that type manufactured by such manufacturer, whichever is less. The same combinations may be used for more than one vehicle type.

S4.5. A warning to the driver shall be activated whenever the key required by S4.2 has been left in the locking system and the driver's door is opened. The warning to the driver need not operate—

(a) After the key has been manually withdrawn to a position from which it may not be turned;

(b) When the key-locking system is in the ''on'' or ''start'' position; or

(c) After the key has been inserted in the locking system and before it has been turned.

S5. *Compliance Test Procedure for vehicles with automatic transmissions.*

S5.1 *Test Conditions.* (a) The vehicle shall be tested at curb weight plus 91 kg (including the driver).

(b) Except where specified otherwise, the test surface shall be level.

S5.2 *Test procedure.* (a) Move the transmission shift lever to any position where it will remain without assistance, including a position between the detent positions, except for the ''park'' position. Try to remove the key from each possible key position in each such shift position.

(b) Drive the vehicle forward up a 10 percent grade and stop it with the service brakes. Apply the parking brake (if present). Move the shift mechanism to the ''park'' position. Note the vehicle position. Release the parking brake. Release the service brakes. Remove the key. Verify that the transmission shift lever or transmission is locked in ''park.'' Verify that the vehicle, at rest, has moved no more than 150 mm from the position noted prior to release of the brakes.

[46 FR 32253, June 22, 1981, as amended at 56 FR 12468, Mar. 26, 1991; 57 FR 2043, Jan. 17, 1992; 60 FR 13644, Mar. 14, 1995; 60 FR 30011, June 7, 1995; 60 FR 41028, Aug. 11, 1995; 62 FR 2978, Jan. 21, 1997]

§ 571.115 [Reserved]

§ 571.116 Standard No. 116; Motor vehicle brake fluids.

S1. *Scope*. This standard specifies requirements for fluids for use in hydraulic brake systems of motor vehicles, containers for these fluids, and labeling of the containers.

S2. *Purpose*. The purpose of this standard is to reduce failures in the hydraulic braking systems of motor vehicles which may occur because of the manufacture or use of improper or contaminated fluid.

S3. *Application*. This standard applies to all fluid for use in hydraulic brake systems of motor vehicles. In addition, S5.3 applies to passenger cars, multipurpose passenger vehicles, trucks, buses, trailers, and motorcycles.

S4. *Definitions*.

Blister means a cavity or sac on the surface of a brake cup.

Brake fluid means a liquid designed for use in a motor vehicle hydraulic brake system in which it will contact elastomeric components made of styrene and butadiene rubber (SBR), ethylene and propylene rubber (EPR), polychloroprene (CR) brake hose inner tube stock or natural rubber (NR).

Chipping means a condition in which small pieces are missing from the outer surface of a brake cup.

Duplicate samples means two samples of brake fluid taken from a single packaged lot and tested simultaneously.

Hydraulic system mineral oil means a mineral-oil-based fluid designed for use in motor vehicle hydraulic brake systems in which the fluid is not in contact with components made of SBR, EPR or NR.

Packager means any person who fills containers with brake fluid that are subsequently distributed for retail sale.

Packaged lot is that quantity of brake fluid shipped by the manufacturer to the packager in a single container, or that quantity of brake fluid manufactured by a single plant run of 24 hours or less, through the same processing equipment and with no change in ingredients.

Scuffing means a visible erosion of a portion of the outer surface of a brake cup.

A *silicone base brake fluid* (SBBF) is a brake fluid which consists of not less than 70 percent by weight of a diorgano polysiloxane.

Sloughing means degradation of a brake cup as evidenced by the presence of carbon black loosely held on the brake cup surface, such that a visible black streak is produced when the cup, with a 500±10 gram deadweight on it, is drawn base down over a sheet of white bond paper placed on a firm flat surface.

Stickiness means a condition on the surface of a brake cup such that fibers will be pulled from a wad of U.S.P. absorbent cotton when it is drawn across the surface.

S5. *Requirements*. This section specifies performance requirements for DOT 3, DOT 4 and DOT 5 brake fluids; requirements for brake fluid certification; and requirements for container sealing, labeling and color coding for brake fluids and hydraulic system mineral oils. Where a range of tolerances is specified, the brake fluid shall meet the requirements at all points within the range.

S5.1 *Brake fluid*. When tested in accordance with S6, brake fluids shall meet the following requirements:

S5.1.1 *Equilibrium reflux boiling point* (*ERBP*). When brake fluid is tested according to S6.1, the ERBP shall not be less than the following value for the grade indicated:

(a) DOT 3: 205 °C. (401 °F.).

(b) DOT 4: 230 °C. (446 °F.).

(c) DOT 5: 260 °C. (500 °F.).

S5.1.2 *Wet ERBP*. When brake fluid is tested according to S6.2, the wet ERBP shall not be less than the following value for the grade indicated:

(a) DOT 3: 140 °C. (284 °F.).

(b) DOT 4: 155 °C. (311 °F.).

(c) DOT 5: 1 180 °C. (356 °F.).

S5.1.3. *Kinematic viscosities*. When brake fluid is tested according to S6.3, the kinematic viscosities in square millimeters per second at stated temperatures shall be neither less than 1.5 mm^2/s at 100 °C. (212 °F.) nor more than the following maximum value for the grade indicated:

(a) DOT 3: 1,500 mm^2/s at minus 40 °C. (minus 40 °F.).

(b) DOT 4: 1,800 mm^2/s at minus 40 °C. (minus 40 °F.).

(c) DOT 5: 900 mm^2/s at minus 40 °C. (minus 40 °F.).

S5.1.4 *pH value*. When brake fluid, except DOT 5 SBBF, is tested according to S6.4, the pH value shall not be less than 7.0 nor more than 11.5.

S5.1.5 *Brake fluid stability*.

S5.1.5.1 *High-temperature stability*. When brake fluid is tested according to S6.5.3 the ERBP shall not change by more than 3 °C. (5.4 °F.) plus 0.05° for each degree that the ERBP of the fluid exceeds 225 °C. (437 °F.).

S5.1.5.2 *Chemical stability*. When brake fluid, except DOT 5 SBBF, is tested according to S6.5.4, the change in temperature of the refluxing fluid mixture shall not exceed 3.0 °C (5.4 °F.) plus 0.05° for each degree that the ERBP of the fluid exceeds 225 °C (437 °F.).

S5.1.6 *Corrosion*. When brake fluid is tested according to S6.6—

(a) The metal test strips shall not show weight changes exceeding the limits stated in Table I.

TABLE I

Test strip material	Maximum permissible weight change, mg./sq. cm. of surface
Steel, tinned iron, cast iron	0.2
Aluminum	.1
Brass, copper	.4

(b) Excluding the area of contact (13±1 mm. (½±1/32 inch) measured from the bolt hole end of the test strip), the metal test strips shall not show pitting or etching to an extent discernible without magnification;

(c) The water-wet brake fluid at the end of the test shall show no jelling at 23±5 °C (73.4±9 °F.);

(d) No crystalline deposit shall form and adhere to either the glass jar walls or the surface of the metal strips;

(e) At the end of the test, sedimentation of the water-wet brake fluid shall not exceed 0.10 percent by volume;

(f) The pH value of water-wet brake fluid, except DOT 5 SBBF, at the end of the test shall not be less than 7.0 nor more than 11.5;

(g) The cups at the end of the test shall show no disintegration, as evidenced by blisters or sloughing;

(h) The hardness of the cup shall not decrease by more than 15 International Rubber Hardness Degrees (IRHD); and

(i) The base diameter of the cups shall not increase by more than 1.4 mm. (0.055 inch).

S5.1.7 *Fluidity and appearance at low temperature*. When brake fluid is tested according to S6.7, at the storage temperature and for the storage times given in Table II—

(a) The fluid shall show no sludging, sedimentation, crystallization, or stratification;

(b) Upon inversion of the sample bottle, the time required for the air bubble to travel to the top of the fluid shall not exceed the bubble flow times shown in Table II; and

(c) On warming to room temperature, the fluid shall resume the appearance and fluidity that it had before chilling.

TABLE II—FLUIDITY AND APPEARANCE AT LOW TEMPERATURES

Storage temperature	Storage time (hours)	Maximum bubble flow time (seconds)
Minus 40±2 °C. (minus 40±3.6 °F.)	144±4.0	10
Minus 50±2 °C. (minus 58±3.6 °F.)	6±0.2	35

S5.1.8 *Evaporation*. When brake fluid is tested according to S6.8—

(a) The loss by evaporation shall not exceed 80 percent by weight;

(b) The residue from the brake fluid after evaporation shall contain no precipitate that remains gritty or abrasive when rubbed with the fingertip; and

(c) The residue shall have a pour point below minus 5 °C. (+23 °F.).

S5.1.9 *Water tolerance*. (a) *At low temperature*. When brake fluid is tested according to S6.9.3(a)—

(1) The fluid shall show no sludging, sedimentation, crystallization, or stratification;

(2) Upon inversion of the centrifuge tube, the air bubble shall travel to the top of the fluid in not more than 10 seconds;

(3) If cloudiness has developed, the wet fluid shall regain its original clarity and fluidity when warmed to room temperature; and

(b) *At 60 °C. (140 °F.)*. When brake fluid is tested according to S6.9.3(b)—

(1) The fluid shall show no stratification; and

(2) Sedimentation shall not exceed 0.15 percent by volume after centrifuging.

S5.1.10 *Compatibility*.

(a) *At low temperature*. When brake fluid is tested according to S6.10.3(a), the test specimen shall show no sludging, sedimentation, or crystallization. In addition, fluids, except DOT 5 SBBF, shall show no stratification.

(b) *At 60 °C. (140 °F.)*. When brake fluid is tested according to S6.10.3(b)—

(1) Sedimentation shall not exceed 0.05 percent by volume after centrifuging; and

(2) Fluids, except DOT 5 SBBF, shall show no stratification.

S5.1.11 *Resistance to oxidation*. When brake fluid is tested according to S6.11—

(a) The metal test strips outside the areas in contact with the tinfoil shall not show pitting or etching to an extent discernible without magnification;

(b) No more than a trace of gum shall be deposited on the test strips outside the areas in contact with the tinfoil;

(c) The aluminum strips shall not change in weight by more than 0.05 mg./sq. cm.; and

(d) The cast iron strips shall not change in weight by more than 0.3 mg./sq. cm.

S5.1.12 *Effects on cups*. When brake cups are subjected to brake fluid in accordance with S6.12—

(a) The increase in the diameter of the base of the cups shall be not less than 0.15 mm. (0.006 inch) or more than 1.40 mm. (0.055 inch);

(b) The decrease in hardness of the cups shall be not more than 10 IRHD at 70 °C. (158 °F.) or more than 15 IRHD at 120 °C. (248 °F.), and there shall be no increase in hardness of the cups; and

(c) The cups shall show no disintegration as evidenced by stickiness, blisters, or sloughing.

S5.1.13 *Stroking properties*. When brake fluid is tested according to S6.13—

(a) Metal parts of the test system shall show no pitting or etching to an extent discernible without magnification;

(b) The change in diameter of any cylinder or piston shall not exceed 0.13 mm. (0.005 inch);

(c) The average decrease in hardness of seven of the eight cups tested (six wheel cylinder and one master cylinder primary) shall not exceed 15 IRHD. Not more than one of the seven cups shall have a decrease in hardness greater than 17 IRHD;

(d) None of the eight cups shall be in an unsatisfactory operating condition as evidenced by stickiness, scuffing, blisters, cracking, chipping, or other change in shape from its original appearance;

(e) None of the eight cups shall show an increase in base diameter greater than 0.90 mm (0.035 inch);

(f) The average lip diameter set of the eight cups shall not be greater than 65 percent.

(g) During any period of 24,000 strokes, the volume loss of fluid shall not exceed 36 milliliters;

(h) The cylinder pistons shall not freeze or function improperly throughout the test;

(i) The total loss of fluid during the 100 strokes at the end of the test shall not exceed 36 milliliters;

(j) The fluid at the end of the test shall show no formation of gels;

(k) At the end of the test the amount of sediment shall not exceed 1.5 percent by volume; and

(l) Brake cylinders shall be free of deposits that are abrasive or that cannot be removed when rubbed moderately with a nonabrasive cloth wetted with ethanol.

S5.1.14 *Fluid color*. Brake fluid and hydraulic system mineral oil shall be of the color indicated:

DOT 3, DOT 4, and DOT 5.1 non-SBBF—colorless to amber.
DOT 5 SBBF—purple.
Hydraulic system mineral oil—green.

S5.2 *Packaging and labeling requirements for motor vehicle brake fluids*.

S5.2.1 *Container sealing*. Each brake fluid or hydraulic system mineral oil container with a capacity of 177 mL or more shall be provided with a resealable closure that has an inner seal impervious to the packaged brake fluid. The container closure shall include a tamper-proof feature that will either be destroyed or substantially altered

when the container closure is initially opened.

S5.2.2 *Certification, marking, and labeling.*

S5.2.2.1 Each manufacturer of a DOT grade brake fluid shall furnish to each packager, distributor, or dealer to whom he delivers brake fluid, the following information:

(a) A serial number identifying the production lot and the date of manufacture of the brake fluid.

(b) The grade (DOT 3, DOT 4, DOT 5) of the brake fluid. If DOT 5 grade brake fluid , it shall be further distinguished as ''DOT 5 SILICONE BASE'' or ''DOT 5.1 NON-SILICONE BASE.''

(c) The minimum wet boiling point in Fahrenheit of the brake fluid.

(d) Certification that the brake fluid conforms to §571.116.

S5.2.2.2 Each packager of brake fluid shall furnish the information specified in paragraphs (a) through (g) of this S5.2.2.2 by clearly marking it on each brake fluid container or on a label (labels) permanently affixed to the container, in any location except a removable part such as a lid. After being subjected to the operations and conditions specified in S6.14, the information required by this section shall be legible to an observer having corrected visual acuity of 20/40 (Snellen ratio) at a distance of 305 mm, and any label affixed to the container in compliance with this section shall not be removable without its being destroyed or defaced.

(a) Certification that the brake fluid conforms to §571.116.

(b) The name of the packager of the brake fluid, which may be in code form.

(c) The name and complete mailing address of the distributor.

(d) A serial number identifying the packaged lot and date of packaging.

(e) Designation of the contents as ''DOT—MOTOR VEHICLE BRAKE FLUID'' (Fill in DOT 3, DOT 4, DOT 5 SILICONE BASE, or DOT 5.1 NON-SILICONE BASE as applicable).

(f) The minimum wet boiling point in Fahrenheit of the DOT brake fluid in the container.

(g) The following safety warnings in capital and lower case letters as indicated:

(1) FOLLOW VEHICLE MANUFACTURER'S RECOMMENDATIONS WHEN ADDING BRAKE FLUID.

(2) KEEP BRAKE FLUID CLEAN AND DRY. Contamination with dirt, water, petroleum products or other materials may result in brake failure or costly repairs.

(3) STORE BRAKE FLUID ONLY IN ITS ORIGINAL CONTAINER. KEEP CONTAINER CLEAN AND TIGHTLY CLOSED TO PREVENT ABSORPTION OF MOISTURE.

(4) *CAUTION:* DO NOT REFILL CONTAINER, AND DO NOT USE FOR OTHER LIQUIDS. (Not required for containers with a capacity in excess of 19 L.)

S5.2.2.3 Each packager of hydraulic system mineral oil shall furnish the information specified in paragraphs (a) through (e) of this S5.2.2.3 by clearly marking it on each brake fluid container or on a label (labels) permanently affixed to the container, in any location except a removable part such as a lid. After being subjected to the operations and conditions specified in S6.14, the information required by this section shall be legible to an observer having corrected visual acuity of 20/40 (Snellen ratio) at a distance of 305 mm and any label affixed to the container in compliance with this section shall not be removable without its being destroyed or defaced.

(a) The name of the packager of the hydraulic system mineral oil, which may be in code form.

(b) The name and complete mailing address of the distributor.

(c) A serial number identifying the packaged lot and date of packaging.

(d) Designation of the contents as ''HYDRAULIC SYSTEM MINERAL OIL'' in capital letters at least 3 mm high.

(e) The following safety warnings in capital and lower case letters as indicated:

(1) FOLLOW VEHICLE MANUFACTURER'S RECOMMENDATIONS WHEN ADDING HYDRAULIC SYSTEM MINERAL OIL.

(2) Hydraulic System Mineral Oil is NOT COMPATIBLE with the rubber components of brake systems designed for use with DOT brake fluids.

(3) KEEP HYDRAULIC SYSTEM MINERAL OIL CLEAN. Contamination with dust or other materials may result in brake failure or costly repair.

(4) *CAUTION:* STORE HYDRAULIC SYSTEM MINERAL OIL ONLY IN ITS ORIGINAL CONTAINER. KEEP CONTAINER CLEAN AND TIGHTLY CLOSED. DO NOT REFILL CONTAINER OR USE OTHER LIQUIDS. (The last sentence is not required for containers with a capacity in excess of 19 L.)

S5.2.2.4 If a container for brake fluid or hydraulic system mineral oil is not normally visible but designed to be protected by an outer container or carton during use, the outer container or carton rather than the inner container shall meet the labeling requirements of S5.2.2.2 or S5.2.2.3, as appropriate.

S5.3 *Motor vehicle requirement.* Each passenger car, multipurpose passenger vehicle, truck, bus, trailer, and motorcycle that has a hydraulic brake system shall be equipped with fluid that has been manufactured and packaged in conformity with the requirements of this standard.

S6. *Test procedures.*

S6.1 *Equilibrium reflux boiling point.* Determine the ERBP of a brake fluid by running duplicate samples according to the following procedure and averaging the results.

S6.1.1 *Summary of procedure.* Sixty milliliters (ml.) of brake fluid are boiled under specified equilibrium conditions (reflux) at atmospheric pressure in a 100-ml. flask. The average temperature of the boiling fluid at the end of the reflux period, corrected for variations in barometric pressure if necessary, is the ERBP.

S6.1.2 *Apparatus.* (See Figure 1) The test apparatus shall consist of—

(a) *Flask.* (See Figure 2) A 100-ml. round-bottom, short-neck heat-resistant glass flask having a neck with a 19/38 standard taper, female ground-glass joint and a side-entering tube, with an outside diameter of 10 millimeters (mm.), which centers the thermometer bulb in the flask 6.5 mm. from the bottom;

(b) *Condenser.* A water-cooled, reflux, glass-tube type, condenser having a jacket 200 mm. in length, the bottom end of which has a 19/38 standard-taper, drip-tip, male ground-glass joint;

(c) *Boiling stones.* Three clean, unused silicon carbide grains (approximately 2 mm. (0.08 inch) in diameter, grit No. 8);

(d) *Thermometer.* Standardized calibrated partial immersion (76 mm.), solid stem, thermometers conforming to the requirements for an ASTM 2C or 2F, and an ASTM 3C or 3F thermometer; and

(e) *Heat source.* Variable autotransformer-controlled heating mantle designed to fit the flask, or an electric heater with rheostat heat control.

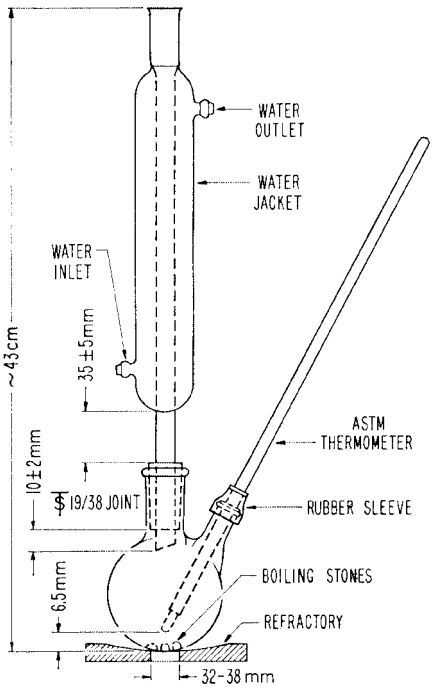

FIG. 1. BOILING POINT TEST APPARATUS

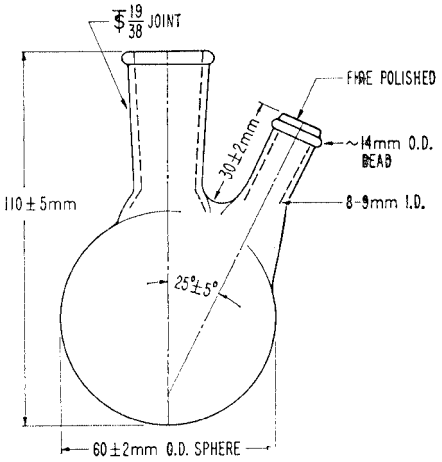

FIG. 2. DETAIL OF 100 ML SHORT-NECK FLASK

S6.1.3 *Preparation of apparatus.* (a) Thoroughly clean and dry all glassware.

(b) Insert thermometer through the side tube until the tip of the bulb is 6.5 mm. (¼ inch) from the bottom center of the flask. Seal with a short piece of natural rubber, EPDM, SBR, or butyl tubing.

(c) Place 60±1 ml. of brake fluid and the silicon carbide grains into the flask.

(d) Attach the flask to the condenser. When using a heating mantle, place the mantle under the flask and support it with a ring-clamp and laboratory-type stand, holding the entire assembly in place by a clamp. When using a rheostat-controlled heater, center a standard porcelain or hard asbestos refractory, having a diameter opening 32 to 38 mm., over the heating element and mount the flask so that direct heat is applied only through the opening in the refractory. Place the assembly in an area free from drafts or other types of sudden temperature changes. Connect the cooling water inlet and outlet tubes to the condenser. Turn on the cooling water. The water supply temperature shall not exceed 28 °C. (82.4 °F.) and the temperature rise through the condenser shall not exceed 2 °C. (3.6 °F.).

S6.1.4 *Procedure.* Apply heat to the flask so that within 10±2 minutes the fluid is refluxing in excess of 1 drop per second. The reflux rate shall not exceed 5 drops per second at any time. Immediately adjust the heating rate to obtain an equilibrium reflux rate of 1 to 2 drops per second over the next 5±2 minutes. Maintain this rate for an additional 2 minutes, taking four temperature readings at 30–second intervals. Record the average of these as the observed ERBP. If no reflux is evident when the fluid temperature reaches 260 °C (500 °F), discontinue heating and report ERBP as in excess of 260 °C (500 °F).

S6.1.5 *Calculation.* (a) *Thermometer inaccuracy.* Correct the observed ERBP by applying any correction factor obtained in standardizing the thermometer.

(b) *Variation from standard barometric pressure.* Apply the factor shown in Table III to calculate the barometric pressure correction to the ERBP.

TABLE III—CORRECTION FOR BAROMETRIC PRESSURE

Observed ERBP corrected for thermometer inaccuracy	Correction per 1 mm difference in pressure[a]	
	°C.	(°F.)
100 °C. (212 °F.) to 190 °C. (374 °F.)	0.039	(0.07)
Over 190 °C. (374 °F.)	0.04	(0.08)

[a] To be added in case barometric pressure is below 760 mm.; to be subtracted in case barometric pressure is above 670 mm.

(c) If the two corrected observed ERBP's agree within 2 °C. (4 °C. for brake fluids having an ERBP over 230 °C./446 °F.) average the duplicate runs as the ERBP; otherwise, repeat the entire test, averaging the four corrected observed values to determine the original ERBP.

S6.2 *Wet ERBP.* Determine the wet ERBP of a brake fluid by running duplicate samples according to the following procedure.

S6.2.1. *Summary of procedure.* A 350 ml. sample of the brake fluid is humidified under controlled conditions; 350 ml. of SAE triethylene glycol monomethyl ether, brake fluid grade, referee material (TEGME) as described in appendix E of SAE Standard J1703 Nov. 83, ''Motor Vehicle Brake Fluid,'' November 1983, is used to establish the end point for humidification. After humidification, the water content and

ERBP of the brake fluid are determined.

S6.2.2 *Apparatus for humidification.* (See Figure 3).

Test apparatus shall consist of—

(a) *Glass jars.* Four SAE RM–49 corrosion test jars or equivalent screwtop, straight-sided, round glass jars each having a capacity of about 475 ml. and approximate inner dimensions of 100 mm. in height by 75 mm. in diameter, with matching lids having new, clean inserts providing water-vapor-proof seals;

(b) *Desiccator and cover.* Two bowl-form glass desiccators, 250-mm. inside diameter, having matching tubulated covers fitted with No. 8 rubber stoppers; and

(c) *Desiccator plate.* Two 230-mm. diameter, perforated porcelain desiccator plates, without feet, glazed on one side.

S6.2.3 *Reagents and materials.* (a) Distilled water, see S7.1.

(b) SAE TEGME referee material.

S6.2.4 *Preparation of apparatus.* Lubricate the ground-glass joint of the desiccator. Pour 450±10 ml. of distilled water into each desiccator and insert perforated porcelain desiccator plates. Place the desiccators in an oven with temperature controlled at 50±1 °C. (122±1.8 °F.) throughout the humidification procedure.

S6.2.5 *Procedure.* Pour 350±5 ml. of brake fluid into an open corrosion test jar. Prepare in the same manner a duplicate test fluid sample and two duplicate specimens of the SAE TEGME referee material (350±5 ml. of TEGME in each jar). The water content of the SAE TEGME fluid is adjusted to 0.50±0.05 percent by weight at the start of the test in accordance with S7.2. Place one sample each of the test brake fluid and the prepared TEGME sample into the same desiccator. Repeat for the second sample of test brake fluid and TEGME in a second desiccator. Place the desiccators in the 50 °C. (122 °F.) controlled oven and replace desiccator covers. At intervals, during oven humidification, remove the rubber stoppers in the tops of desiccators. Using a long needled hypodermic syringe, take a sample of not more than 2 ml. from each TEGME sample and determine its water content. Remove no more than 10 ml. of fluid from each SAE TEGME sample during the humidification procedure. When the water content of the SAE fluid reaches 3.70±0.05 percent by weight (average of the duplicates). remove the two test fluid specimens from their desiccators and promptly cap each jar tightly. Allow the sealed jars to cool for 60 to 90 minutes at 23°±5 °C. (73.4°±9 °F.). Measure the water contents of the test fluid specimens in accordance with S7.2 and determine their ERBP's in accordance with S6.1. If the two ERBPs agree within 4 °C. (8 °F.), average them to determine the wet ERBP; otherwise repeat and average the four individual ERBPs as the wet ERBP of the brake fluid.

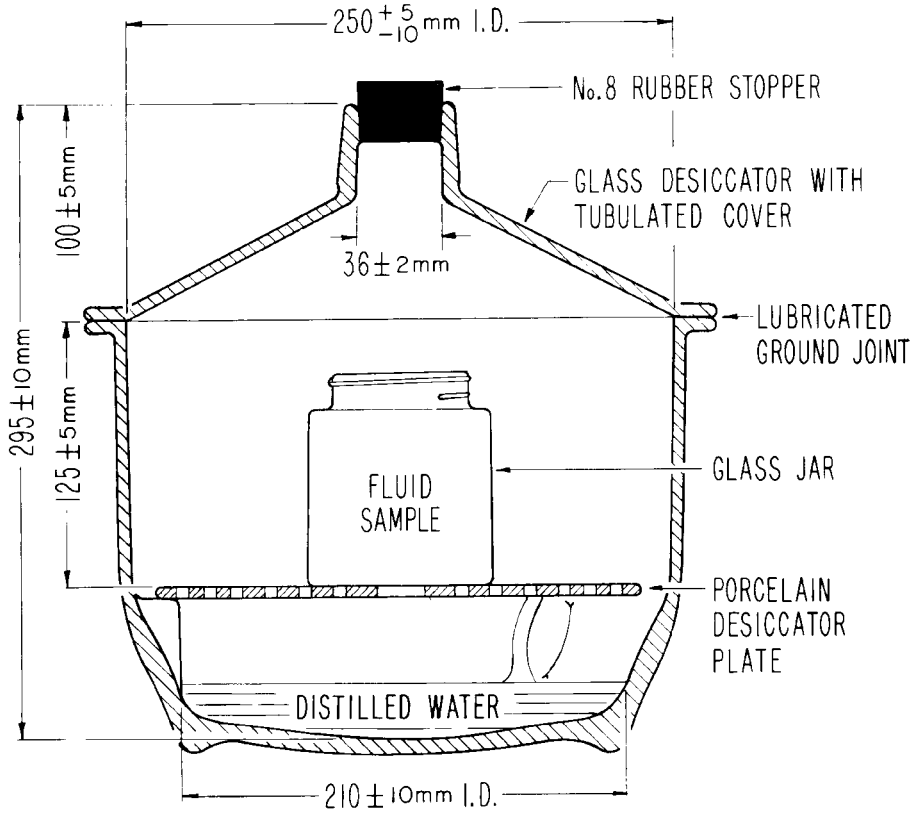

FIG. 3
HUMIDIFICATION APPARATUS

S6.3 *Kinematic viscosities.* Determine the kinematic viscosity of a brake fluid in mm^2/s by the following procedure. Run duplicate samples at each of the specified temperatures, making two timed runs on each sample.

S6.3.1 *Summary of the procedure.* The time is measured for a fixed volume of the brake fluid to flow through a calibrated glass capillary viscometer under an accurately reproducible head and at a closely controlled temperature. The kinematic viscosity is then calculated from the measured flow time and the calibration constant of the viscometer.

S6.3.2 *Apparatus.*

(a) *Viscometers.* Calibrated glass capillary-type viscometers, ASTM D2515–66, "Standard Specification for Kinematic Glass Viscometers," measuring viscosity within the precision limits of S6.4.7. Use suspended level viscometers for viscosity measurements at low temperatures. Use Cannon-Fenske Routine or other modified Ostwald viscometers at ambient temperatures and above.

(b) *Viscometer holders and frames.* Mount a viscometer in the constant-temperature bath so that the mounting tube is held within 1° of the vertical.

(c) *Viscometer bath.* A transparent liquid bath of sufficient depth such that

at no time during the measurement will any portion of the sample in the viscometer be less than 2 cm. below the surface or less than 2 cm. above the bottom. The bath shall be cylindrical in shape, with turbulent agitation sufficient to meet the temperature control requirements. For measurements within 15° to 100 °C. (60° to 212 °F.) the temperature of the bath medium shall not vary by more than 0.01 °C. (0.02 °F.) over the length of the viscometers, or between the positions of the viscometers, or at the locations of the thermometers. Outside this range, the variation shall not exceed 0.03 °C. (0.05 °F.).

(d) *Thermometers.* Liquid-in-Glass Kinematic Viscosity Test Thermometers, covering the range of test temperatures indicated in Table IV and conforming to ASTM E1–68, ''Specifications for ASTM Thermometers,'' and in the IP requirements for IP Standard Thermometers. Standardize before use (see S6.3.3(b)). Use two standardized thermometers in the bath.

TABLE IV—KINEMATIC VISCOSITY THERMOMETERS

Temperature range		For tests at		Subdivisions		Thermometer number	
°C.	°F.	°C.	°F.	°C.	°F.	ASTM	IP
Minus 55.3 to minus 52.5 ..	Minus 67.5 to minus 62.5	Minus 55 ..	Minus 67 ..	0.05	0.1	74 F	69 F. or C.
Minus 41.4 to minus 38.6 ..	Minus 42.5 to minus 37.5	Minus 40 ..	Minus 40 ..	0.05	0.1	73 F	68 F. or C.
98.6 to 101.4	207.5 to 212.5	100	212	0.05	0.1	30 F	32 F. or C.

(e) *Timing device.* Stop watch or other timing device graduated in divisions representing not more than 0.2 second, with an accuracy of at least ±0.05 percent when tested over intervals of 15 minutes. Electrical timing devices may be used when the current frequency is controlled to an accuracy of 0.01 percent or better.

S6.3.3 *Standardization.*

(a) *Viscometers.* Use viscometers calibrated in accordance with appendix 1 of ASTM D445–65, ''Viscosity of Transparent and Opaque Liquids (Kinematic and Dynamic Viscosities).'' The calibration constant, C, is dependent upon the gravitational acceleration at the place of calibration. This must, therefore, be supplied by the standardization laboratory together with the instrument constant. Where the acceleration of gravity, g, in the two locations differs by more than 0.1 percent, correct the calibration constant as follows:

$$C_2=(g_2/g_1)\times C_1$$

where the subscripts 1 and 2 indicate respectively the standardization laboratory and the testing laboratory.

(b) *Thermometers.* Check liquid-in-glass thermometers to the nearest 0.01 °C. (0.02 °F.) by direct comparison with a standardized thermometer. Kinematic Viscosity Test Thermometers shall be standardized at ''total immersion.'' The ice point of standardized thermometers shall be determined before use and the official corrections shall be adjusted to conform to the changes in ice points. (See ASTM E77–66, ''Verification and Calibration of Liquid-in-Glass Thermometers.'')

(c) *Timers.* Time signals are broadcast by the National Bureau of Standards, Station WWV, Washington, DC at 2.5, 5, 10, 15, 20, 25, 30, and 35 Mc/sec (MHz). Time signals are also broadcast by Station CHU from Ottawa, Canada, at 3.330, 7.335, and 14.670 Mc/sec, and Station MSF at Rugby, United Kingdom, at 2.5, 5, and 10 Mc/sec.

S6.3.4 *Procedure.* (a) Set and maintain the bath at the appropriate test temperature (see S5.1.3) within the limits specified in S6.3.2(c). Apply the necessary corrections, if any, to all thermometer readings.

(b) Select a clean, dry, calibrated viscometer giving a flow time not less than its specified minimum, or 200 seconds, whichever is the greater.

(c) Charge the viscometer in the manner used when the instrument was calibrated. Do not filter or dry the brake fluid, but protect it from contamination by dirt and moisture during filling and measurements.

(1) Charge the suspended level viscometers by tilting about 30° from

the vertical and pouring sufficient brake fluid through the fill tube into the lower reservoir so that when the viscometer is returned to vertical position the meniscus is between the fill marks. For measurements below 0 °C. (32 °F.), before placing the filled viscometer into the constant temperature bath, draw the sample into the working capillary and timing bulb and insert small rubber stoppers to suspend the fluid in this position, to prevent accumulation of water condensate on the walls of the critical portions of the viscometer. Alternatively, fit loosely packed drying tubes into the open ends of the viscometer to prevent water condensation, but do not restrict the flow of the sample under test by the pressures created in the instrument.

(2) If a Cannon-Fenske Routine viscometer is used, charge by inverting and immersing the smaller arm into the brake fluid and applying vacuum to the larger arm. Fill the tube to the upper timing mark, and return the viscometer to an upright position.

(d) Mount the viscometer in the bath in a true vertical position (see S6.3.2(b)).

(e) The viscometer shall remain in the bath until it reaches the test temperature.

(f) At temperatures below 0 °C. (32 °F.) conduct an untimed preliminary run by allowing the brake fluid to drain through the capillary into the lower reservoir after the test temperature has been established.

(g) Adjust the head level of the brake fluid to a position in the capillary arm about 5 mm. above the first timing mark.

(h) With brake fluid flowing freely measure to within 0.2 second the time required for the meniscus to pass from the first timing mark to the second. If this flow time is less than the minimum specified for the viscometer, or 200 seconds, whichever is greater, repeat using a viscometer with a capillary of smaller diameter.

(i) Repeat S6.3.4 (g) and (h). If the two timed runs do not agree within 0.2 percent, reject and repeat using a fresh sample of brake fluid.

S6.3.5 *Cleaning the viscometers.* (a) Periodically clean the instrument with chromic acid to remove organic deposits. Rinse thoroughly with distilled water and acetone, and dry with clean dry air.

(b) Between successive samples rinse the viscometer with ethanol (isopropanol when testing DOT 5 fluids) followed by an acetone or ether rinse. Pass a slow stream of filtered dry air through the viscometer until the last trace of solvent is removed.

S6.3.6 *Calculation.* (a) The following viscometers have a fixed volume charged at ambient temperature, and as a consequence *C* varies with test temperature: Cannon-Fenske Routine, Pinkevitch, Cannon-Manning Semi-Micro, and Cannon Fenske Opaque. To calculate *C* at test temperatures other than the calibration temperature for these viscometers, see ASTM D2515–66, ''Kinematic Glass Viscometers'' or follow instructions given on the manufacturer's certificate of calibration.

(b) Average the four timed runs on the duplicate samples to determine the kinematic viscosities.

S6.3.7 *Precision* (*at 95 percent confidence level*).

(a) *Repeatability.* If results on duplicate samples by the same operator differ by more than 1 percent of their mean, repeat the tests.

S6.4 *pH value.* Determine the pH value of a brake fluid by running one sample according to the following procedure.

S6.4.1 *Summary of the procedure.* Brake fluid is diluted with an equal volume of an ethanol-water solution. The pH of the resultant mixture is measured with a prescribed pH meter assembly at 23 °C. (73.4 °F.).

S6.4.2 *Apparatus.* The pH assembly consists of the pH meter, glass electrode, and calomel electrode, as specified in Appendices A1.1, A1.2, and A1.3 of ASTM D 1121–67, ''Standard Method of Test for Reserve Alkalinity of Engine Antifreezes and Antirusts.'' The glass electrode is a full range type (pH 0–14), with low sodium error.

S6.4.3 *Reagents.* Reagent grade chemicals conforming to the specifications of the Committee on Analytical Reagents of the American Chemical Society.

(a) *Distilled water.* Distilled water (S7.1) shall be boiled for about 15 minutes to remove carbon dioxide, and protected with a soda-lime tube or its equivalent while cooling and in storage. (Take precautions to prevent contamination by the materials used for protection against carbon dioxide.) The pH of the boiled distilled water shall be between 6.2 and 7.2 at 25 °C. (77 °F.).

(b) *Standard buffer solutions.* Prepare buffer solutions for calibrating the pH meter and electrode pair from salts sold specifically for use, either singly or in combination, as pH standards. Dry salts for 1 hour at 110 °C. (230 °F.) before use except for borax which shall be used as the decahydrate. Store solutions with pH less than 9.5 in bottles of chemically resistant glass or polyethylene. Store the alkaline phosphate solution in a glass bottle coated inside with paraffin. Do not use a standard with an age exceeding three months.

(1) Potassium hydrogen phthalate buffer solution (0.05 M, pH=4.01 at 25 °C. (77 °F.)). Dissolve 10.21 g. of potassium hydrogen phthalate ($KHC_8 H_4 O_4$) in distilled water. Dilute to 1 liter.

(2) Neutral phosphate buffer solution (0.025 M with respect to each phosphate salt, pH=6.86 at 25 °C. (77 °F.)). Dissolve 3.40 g. of potassium dihydrogen phosphate ($KH_2 PO_4$) and 3.55 g. of anhydrous disodium hydrogen phosphate ($Na_2 HPO_4$) in distilled water.

(3) Borax buffer solution (0.01 M, pH=9.18 at 25 °C. (77 °F.)). Dissolve 3.81 g. of disodium tetraborate decahydrate ($Na_2 B_4 O_7$°10H**2** O) in distilled water, and dilute to 1 liter. Stopper the bottle except when actually in use.

(4) Alkaline phosphate buffer solution (0.01 M trisodium phosphate, pH=11.72 at 25 °C. (77 °F.)). Dissolve 1.42 g. of anhydrous disodium hydrogen phosphate ($Na_2 HPO_4$) in 100 ml. of a 0.1 M carbonate-free solution of sodium hydroxide. Dilute to 1 liter with distilled water.

(5) Potassium chloride electrolyte. Prepare a saturated solution of potassium chloride (KCl) in distilled water.

(c) *Ethanol-water mixture.* To 80 parts by volume of ethanol (S7.3) add 20 parts by volume of distilled water. Adjust the pH of the mixture to 7±0.1 using 0.1 N sodium hydroxide (NaOH) solution. If more than 4 ml. of NaOH solution per liter of mixture is required for neutralization, discard the mixture.

S6.4.4 *Preparation of electrode system.*

(a) *Maintenance of electrodes.* Clean the glass electrode before using by immersing in cold chromic-acid cleaning solution. Drain the calomel electrode and fill with KCl electrolyte, keeping level above that of the mixture at all times. When not in use, immerse the lower halves of the electrodes in distilled water, and do not immerse in the mixture for any appreciable period of time between determinations.

(b) *Preparation of electrodes.* Condition new glass electrodes and those that have been stored dry as recommended by the manufacturer. Before and after using, wipe the glass electrode thoroughly with a clean cloth, or a soft absorbent tissue, and rinse with distilled water. Before each pH determination, soak the prepared electrode in distilled water for at least 2 minutes. Immediately before use, remove any excess water from the tips of the electrode.

S6.4.5 *Standardization of the pH assembly and testing of the electrodes.* (a) Immediately before use, standardize the pH assembly with a standard buffer solution. Then use a second standard buffer solution to check the linearity of the response of the electrodes at different pH values, and to detect a faulty glass electrode or incorrect temperature compensation. The two buffer solutions bracket the anticipated pH value of the test brake fluid.

(b) Allow instrument to warm up, and adjust according to the manufacturer's instructions. Immerse the tips of the electrodes in a standard buffer solution and allow the temperature of the buffer solution and the electrodes to equalize. Set the temperature knob at the temperature of the buffer solution. Adjust the standardization or asymmetry potential control until the meter registers a scale reading, in pH units, equal to the known pH of the standardizing buffer solution.

(c) Rinse the electrodes with distilled water and remove excess water from the tips. Immerse the electrodes in a second standard buffer solution. The reading of the meter shall agree with the known pH of the second standard

buffer solution within ±0.05 unit without changing the setting of the standardization of asymmetry potential control.

(d) A faulty electrode is indicated by failure to obtain a correct value for the pH of the second standard buffer solution after the meter has been standardized with the first.

S6.4.6 *Procedure*. To 50±1 ml. of the test brake fluid add 50±1 ml. of the ethanol-water (S6.4.3(c)) and mix thoroughly. Immerse the electrodes in the mixture. Allow the system to come to equilibrium, readjust the temperature compensation if necessary, and take the pH reading.

S6.5 *Fluid stability*. Evaluate the heat and chemical stability of a brake fluid by the following procedure, running duplicate samples for each test and averaging the results.

S6.5.1 *Summary of the procedure*. The degradation of the brake fluid at elevated temperature, alone or in a mixture with a reference fluid, is evaluated by determining the change in boiling point after a period of heating under reflux conditions.

S6.5.2 *Apparatus*. Use the apparatus and preparation specified in S6.1.2 and S6.1.3.

S6.5.3 *High temperature stability*.

S6.5.3.1 *Procedure*. (a) Heat a new 60±1 ml. sample of the brake fluid to 185°±2 °C. (365°±3.6 °F.). Hold at this temperature for 120±5 minutes. Bring to a reflux rate in excess of 1 drop per second within 5 minutes. The reflux rate should not exceed 5 drops per second at any time. Over the next 5±2 minutes adjust the heating rate to obtain an equilibrium reflux rate of 1 to 2 drops per second. Maintain this rate for an additional 2 minutes, taking four temperature readings at 30–second intervals. Average these as the observed ERBP. If no reflux is evident when the fluid temperature reaches 260 °C. (500 °F), discontinue heating and report ERBP as in excess of 260 °C. (500 °F.).

S6.5.3.2 *Calculation*. Correct the observed ERBP for thermometer and barometric pressure factors according to S6.1.5 (a) and (b). Average the corrected ERBP's of the duplicate samples. The difference between this average and the original ERBP obtained in S6.1 is the change in ERBP of the fluid.

S6.5.4 *Chemical stability*.

S6.5.4.1 *Materials*. SAE RM–66–04 Compatibility Fluid as described in appendix B of SAE Standard J1703 JAN 1995, ''Motor Vehicle Brake Fluid.'' (SAE RM–66–03 Compatibility Fluid as described in appendix A of SAE Standard J1703 Nov83, ''Motor Vehicle Brake Fluid,'' November 1983, may be used in place of SAE RM–66–04 until January 1, 1995.)

S6.5.4.2 *Procedure*. (a) Mix 30 ± 1 ml. of the brake fluid with 30 ± 1 ml. of SAE RM–66–04 Compatibility Fluid in a boiling point flask (S6.1.2(a)). Determine the initial ERBP of the mixture by applying heat to the flask so that the fluid is refluxing in 10 ± 2 minutes at a rate in excess of 1 drop per second, but not more than 5 drops per second. Note the maximum fluid temperature observed during the first minute after the fluid begins refluxing at a rate in excess of 1 drop per second. Over the next 15 ± 1 minutes, adjust and maintain the reflux rate at 1 to 2 drops per second. Maintain this rate for an additional 2 minutes, recording the average value of four temperature readings taken at 30 second intervals as the final ERBP.

(b) Thermometer and barometric corrections are not required.

S6.5.4.3 *Calculation*. The difference between the initial ERBP and the final average temperature is the change in temperature of the refluxing mixture. Average the results of the duplicates to the nearest 0.5 °C (1.0 °F).

S6.6 *Corrosion*. Evaluate the corrosiveness of a brake fluid by running duplicate samples according to the following procedure.

S6.6.1 *Summary of the procedure*. Six specified metal corrosion test strips are polished, cleaned, and weighed, then assembled as described. Assembly is placed on a standard wheel cylinder cup in a corrosion test jar, immersed in the water-wet brake fluid, capped and placed in an oven at 100 °C. (212 °F.) for 120 hours. Upon removal and cooling, the strips, fluid, and cups are examined and tested.

S6.6.2 *Equipment*. (a) *Balance*. An analytical balance having a minimum capacity of 50 grams and capable of weighing to the nearest 0.1 mg.

(b) *Desiccators*. Desiccators containing silica gel or other suitable desiccant.

(c) *Oven*. Gravity convection oven capable of maintaining the desired set point within 2 °C. (3.6 °F.).

(d) *Micrometer*. A machinist's micrometer 25 to 50 mm. (1 to 2 inches) capacity, or an optical comparator, capable of measuring the diameter of the SBR wheel cylinder (WC) cups to the nearest 0.02 mm. (0.001 inch).

S6.6.3 *Materials*. (a) *Corrosion test strips*. Two sets of strips from each of the metals listed in appendix C of SAE Standard J1703b. Each strip shall be approximately 8 cm. long, 1.3 cm. wide, not more than 0.6 cm. thick, and have a surface area of 25±5 sq. cm. and a hole 4 to 5 mm. (0.16 to 0.20 inch) in diameter on the centerline about 6 mm. from one end. The hole shall be clean and free from burrs. Tinned iron strips shall be unused. Other strips, if used, shall not be employed if they cannot be polished to a high finish.

(b) *SBR cups*. Two unused standard SAE SBR wheel cylinder (WC) cups, as specified in S7.6.

(c) *Corrosion test jars and lids*. Two screw-top straight-sided round glass jars, each having a capacity of approximately 475 ml. and inner dimensions of approximately 100 mm. in height and 75 mm. in diameter, and a tinned steel lid (no insert or organic coating) vented with a hole 0.8±0.1 mm. (0.031±0.004 inch) in diameter (No. 68 drill).

(d) *Machine screws and nuts*. Clean, rust and oil-free, uncoated mild steel round or fillister head machine screws, size 6 or 8–32 UNC–Class 2A, five-eighths or three-fourths inch long (or equivalent metric sizes), and matching uncoated nuts.

(e) *Supplies for polishing strips*. Waterproof silicon carbide paper, grit No. 320 A; grade 00 steel wool, lint-free polishing cloth.

(f) *Distilled water* as specified in S7.1.

(g) *Ethanol* as specified in S7.3.

(h) Isopropanol as specified in S7.7.

S6.6.4 *Preparation*.

(a) *Corrosion test strips*. Except for the tinned iron strips, abrade corrosion test strips on all surface areas with silicon carbide paper wet with ethanol (isopropanol when testing DOT 5 SBBF fluids) until all surface scratches, cuts and pits are removed. Use a new piece of paper for each different type of metal. Polish the strips with the 00 grade steel wool. Wash all strips, including the tinned iron and the assembly hardware, with ethanol (isopropanol when testing DOT 5 SBBF fluids); dry the strips and assembly hardware with a clean lint free cloth or use filtered compressed air and place the strips and hardware in a desiccator containing silica gel or other suitable desiccant and maintained at 23°±5 °C. (73.4°±9 °F.), for at least 1 hour. Handle the strips with forceps after polishing. Weigh and record the weight of each strip to the nearest 0.1 mg. Assemble the strips on a clean dry machine screw, with matching plain nut, in the order of tinned iron, steel, aluminum, cast iron, brass, and copper. Bend the strips, other than the cast iron, so that there is a separation of 3±½ mm. (⅛±1/64 inch) between adjacent strips for a distance of about 5 cm. (2 inches) from the free end of the strips. (See Figure 4.) Tighten the screw on each test strip assembly so that the strips are in electrolytic contact, and can be lifted by either of the outer strips (tinned iron or copper) without any of the strips moving relative to the others when held horizontally. Immerse the strip assemblies in 90 percent ethyl alcohol. Dry with dried filtered compressed air, then desiccate at least 1 hour before use.

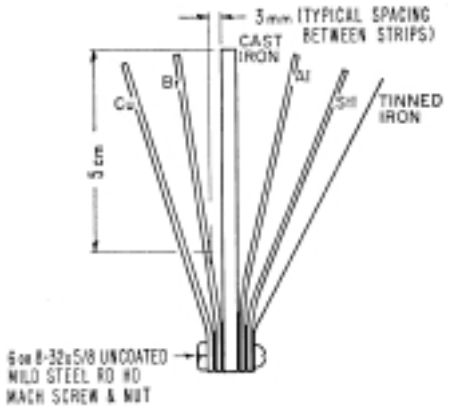

FIG. 4. CORROSION STRIP ASSEMBLY

(b) *SBR WC cups*. Measure the base diameters of the two standard SBR

cups, using an optical comparator or micrometer, to the nearest 0.02 mm. (0.001 inch) along the centerline of the SAE and rubber-type identifications and at right angles to this centerline. Take the measurements at least 0.4 mm. (0.015 inch) above the bottom edge and parallel to the base of the cup. Discard any cup if the two measured diameters differ by more than 0.08 mm. (0.003 inch). Average the two readings on each cup. Determine the hardness of the cups according to S7.4.

S6.6.5 *Procedure.* Rinse the cups in ethanol (isopropanol when testing DOT 5 SBBF fluids) for not more than 30 seconds and wipe dry with a clean lint-free cloth. Place one cup with lip edge facing up, in each jar. Insert a metal strip assembly inside each cup with the fastened end down and the free end extending upward. (See Figure 5.) When testing brake fluids, except DOT 5 SBBF, mix 760 ml. of brake fluid with 40 ml. of distilled water. When testing DOT 5 SBBF's, humidify 800 ml. of brake fluid in accordance with S6.2, eliminating determination of the ERBP. Using this water-wet mixture, cover each strip assembly to a minimum depth of 10 mm. above the tops of the strips. Tighten the lids and place the jars for 120±2 hours in an oven maintained at 100°±2 °C. (212°±3.6 °F.). Allow the jars to cool at 23°±5 °C. (73.4°±9 °F.) for 60 to 90 minutes. Immediately remove the strips from the jars using forceps, agitating the strip assembly in the fluid to remove loose adhering sediment. Examine the test strips and jars for adhering crystalline deposits. Disassemble the metal strips, and remove adhering fluid by flushing with water; clean each strip by wiping with a clean cloth wetted with ethanol (isopropanol when testing DOT 5 fluids). Examine the strips for evidence of corrosion and pitting. Disregard staining or discoloration. Place the strips in a desiccator containing silica gel or other suitable desiccant, maintained at 23°±5 °C. (73.4°±9 °F.), for at least 1 hour. Weigh each strip to the nearest 0.1 mg. Determine the change in weight of each metal strip. Average the results for the two strips of each type of metal. Immediately following the cooling period, remove the cups from the jars with forceps. Remove loose adhering sediment by agitation of the cups in the mixture. Rinse the cups in ethanol (isopropanol when testing DOT 5 fluids) and air-dry. Examine the cups for evidence of sloughing, blisters, and other forms of disintegration. Measure the base diameter and hardness of each cup within 15 minutes after removal from the mixture. Examine the mixture for gelling. Agitate the mixture to suspend and uniformly disperse sediment. From each jar, transfer a 100 ml. portion of the mixture to an ASTM cone-shaped centrifuge tube. Determine the percent sediment after centrifuging as described in S7.5. Measure the pH value of the corrosion text fluid according to S6.4.6. Measure the pH value of the test mixture according to S6.4.6.

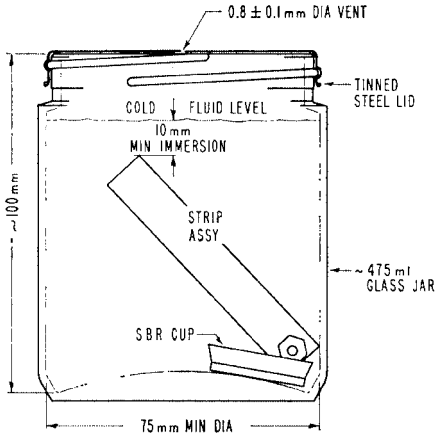

FIG. 5. CORROSION TEST APPARATUS

S6.6.6 *Calculation.* (a) Measure the area of each type of test strip to the nearest square centimeter. Divide the average change in mass for each type by the area of that type.

(b) Note other data and evaluations indicating compliance with S5.1.6. In the event of a marginal pass on inspection by attributes, or of a failure in one of the duplicates, run another set of duplicate samples. Both repeat samples shall meet all requirements of S5.1.6.

S6.7 *Fluidity and appearance at low temperatures.* Determine the fluidity and appearance of a sample of brake fluid at each of two selected temperatures by the following procedure.

S6.7.1 *Summary of procedure.* Brake fluid is chilled to expected minimum exposure temperatures and observed for clarity, gellation, sediment, separation of components, excessive viscosity or thixotropy.

S6.7.2 *Apparatus.* (a) *Oil sample bottle.* Two clear flint glass 4–ounce bottles made especially for sampling oil and other liquids, with a capacity of approximately 125 ml., an outside diameter of 37±0.05 mm. and an overall height of 165±2.5 mm.

(b) *Cold chamber.* An air bath cold chamber capable of maintaining storage temperatures down to minus 55 °C. (minus 67 °F.) with an accuracy of ±2 °C. (3.6 °F.).

(c) *Timing device.* A timing device in accordance with S6.3.2(e).

S6.7.3 *Procedure.* (a) Place 100±1 ml. of brake fluid at room temperature in an oil sample bottle. Stopper the bottle with an unused cork and place in the cold chamber at the higher storage temperature specified in Table II (S5.1.7(c)). After 144±4 hours remove the bottle from the chamber, quickly wipe it with a clean, lint-free cloth, saturated with ethanol (isopropanol when testing DOT 5 fluids) or acetone. Examine the fluid for evidence of sludging, sedimentation, crystallization, or stratification. Invert the bottle and determine the number of seconds required for the air bubble to travel to the top of the fluid. Let sample warm to room temperature and examine.

(b) Repeat S6.7.3(a), substituting the lower cold chamber temperature specified in Table II, and a storage period of 6 hours ±12 minutes.

NOTE: Test specimens from either storage temperature may be used for the other only after warming up to room temperature.

S6.8 *Evaporation.* The evaporation residue, and pour point of the evaporation residue of brake fluid, are determined by the following procedure. Four replicate samples are run.

S6.8.1 *Summary of the procedure.* The volatile diluent portion of a brake fluid is evaporated in an oven at 100 °C. (212 °F.). The nonvolatile lubricant portion (evaporation residue) is measured and examined for grittiness; the residues are then combined and checked to assure fluidity at minus 5 °C. (23 °F.).

S6.8.2 *Apparatus.*

(a) *Petri dishes.* Four covered glass petri dishes approximately 100 mm. in diameter and 15 mm. in height.

(b) *Oven.* A top-vented gravity-convection oven capable of maintaining a temperature of 100°±2 °C. (212°±3.6 °F.).

(c) *Balance.* A balance having a capacity of at least 100 grams, capable of weighing to the nearest 0.01 gram, and suitable for weighing the petri dishes.

(d) *Oil sample bottle.* A glass sample bottle as described in S6.7.2(a).

(e) *Cold chamber.* Air bath cold chamber capable of maintaining an oil sample bottle at minus 5°±1 °C. (23°±2 °F.).

(f) *Timing device.* A timing device as described in S6.3.2(e).

S6.8.3 *Procedure.* Obtain the tare weight of each of the four covered petri dishes to the nearest 0.01 gram. Place 25±1 ml. of brake fluid in each dish, replace proper covers and reweigh. Determine the weight of each brake fluid test specimen by the difference. Place the four dishes, each inside its inverted cover, in the oven at 100°±2 °C. (212°±4 °F.) for 46±2 hours. (Note: Do not simultaneously heat more than one fluid in the same oven.) Remove the dishes from the oven, allow to cool to 23°±5 °C. (73.4°±9 °F.), and weigh. Return to the oven for an additional 24±2 hours. If at the end of 72±4 hours the average loss by evaporation is less than 60 percent, discontinue the evaporation procedure and proceed with examination of the residue. Otherwise, continue this procedure either until equilibrium is reached as evidenced by an incremental mass loss of less than 0.25 gram in 24 hours on all individual dishes or for a maximum of 7 days. During the heating and weighing operation, if it is necessary to remove the dishes from the oven for a period of longer than 1 hour, the dishes shall be stored in a desiccator as soon as cooled to room temperature. Calculate the percentage of fluid evaporated from each dish. Examine the residue in the dishes at the end of 1 hour at 23°±5 °C. (73.4°±9 °F.). Rub any sediment with the fingertip to determine grittiness or abrasiveness. Combine the residues from all four dishes in a 118 mL (4-ounce) oil-sample bottle and store vertically in a cold chamber at minus 5°±1 °C. (23°±5 °F.) for 60±10 minutes. Quickly remove the bottle and place in the horizontal position.

The residue must flow at least 5 mm (0.2 inch) along the tube within 5 seconds.

S6.8.4 *Calculation*. The average of the percentage evaporated from all four dishes is the loss by evaporation.

S6.9 *Water tolerance*. Evaluate the water tolerance characteristics of a brake fluid by running one test specimen according to the following procedure.

S6.9.1 *Summary of the procedure*.

Brake fluid, except DOT 5 SBBF, is diluted with 3.5 percent water (DOT 5 SBBF is humidified), then stored at minus 40 °C. (minus 40 °F.) for 120 hours. The cold, water-wet fluid is first examined for clarity, stratification, and sedimentation, then placed in an oven at 60 °C. (140 °F.) for 24 hours. On removal, it is again examined for stratification, and the volume percent of sediment determined by centrifuging.

S6.9.2 *Apparatus*.

(a) *Centrifuge tube*. See S7.5.1(a).

(b) *Centrifuge*. See S7.5.1(b).

(c) *Cold chamber*. See S6.7.2(b).

(d) *Oven*. Gravity or forced convection oven.

(e) *Timing device*. See S6.3.2(e).

S6.9.3 *Procedure*.

(a) *At low temperature*. Humidify 100±1 ml. of DOT 5 SBBF brake fluid in accordance with S6.2 eliminating determination of the ERBP. When testing brake fluids except DOT 5 SBBF, mix 3.5±0.1 ml. of distilled water with 100±1 ml. of the brake fluid; pour into a centrifuge tube. Stopper the tube with a clean cork and place in the cold chamber maintained at minus 40±2 °C. (minus 40±3.6 °F.). After 120 hours±2 hours remove the tube, quickly wipe with clean lint-free cloth saturated with ethanol or acetone and examine the fluid for evidence of sludging, sedimentation, crystallization, or stratification. Invert the tube and determine the number of seconds required for the air bubble to travel to the top of the fluid. (The air bubble is considered to have reached the top of the fluid when the top of the bubble reaches the 2 ml. graduation of the centrifuge tube.) If the wet fluid has become cloudy, warm to 23±5 °C. (73.4±9 °F.) and note appearance and fluidity.

(b) *At 60 °C. (140 °F.)*. Place tube and brake fluid from S6.9.3(a) in an oven maintained at 60°±2 °C. (140°±3.6 °F.) for 24±2 hours. Remove the tube and immediately examine the contents for evidence of stratification. Determine the percent sediment by centrifuging as described in S7.5.

S6.10 *Compatibility*. The compatibility of a brake fluid with other brake fluids shall be evaluated by running one test sample according to the following procedure.

S6.10.1 *Summary of the procedure*.

Brake fluid is mixed with an equal volume of SAE RM–66–04 Compatibility Fluid, then tested in the same way as for water tolerance (S6.9) except that the bubble flow time is not measured. This test is an indication of the compatibility of the test fluid with other motor vehicle brake fluids at both high and low temperatures.

S6.10.2 *Apparatus and materials*.

(a) *Centrifuge tube*. See S7.5.1(a).

(b) *Centrifuge*. See S7.5.1(b).

(c) *Cold Chamber*. See S6.7.2(b)

(d) *Oven*. See S6.9.2(d)

(e) *SAE RM–66–04 Compatibility Fluid*. As described in appendix B of SAE Standard J1703 JAN 1995 ''Motor Vehicle Brake Fluid.'' (SAE RM–66–03 Compatibility Fluid as described in appendix A of SAE Standard J1703 NOV83, ''Motor Vehicle Brake Fluid,'' November 1983, may be used in place of SAE RM–66–04 until January 1, 1995.)

S6.10.3 *Procedure*.

(a) *At low temperature*.

Mix 50±0.5 mL of brake fluid with 50±0.5 mL of SAE RM–66–04 Compatibility Fluid. Pour this mixture into a centrifuge tube and stopper with a clean dry cork. Place tube in the cold chamber maintained at minus 40°±2 °C. (minus 40°±4 °F). After 24±2 hours, remove tube, quickly wipe with a clean lint-free cloth saturated with ethanol (isopropanol when testing DOT 5 fluids) or acetone. Examine the test specimen for evidence of slugging, sedimentation, or crystallization. Test fluids, except DOT 5 SBBF, shall be examined for stratification.

S6.11 *Resistance to oxidation*. The stability of a brake fluid under oxidative conditions shall be evaluated by running duplicate samples according to the following procedure.

S6.11.1 *Summary of procedure*.

Brake fluids, except DOT 5 SBBF, are activated with a mixture of approximately 0.2 percent benzoyl peroxide and 5 percent water. DOT 5 SBBF is humidified in accordance with S6.2 eliminating determination of the ERBP, and then approximately 0.2 percent benzoyl peroxide is added. A corrosion test strip assembly consisting of cast iron and an aluminum strip separated by tinfoil squares at each end is then rested on a piece of SBR WC cup positioned so that the test strip is half immersed in the fluid and oven aged at 70 °C. (158 °F.) for 168 hours. At the end of this period, the metal strips are examined for pitting, etching, and loss of mass.

S6.11.2 *Equipment.*

(a) *Balance.* See S6.6.2(a).

(b) *Desiccators.* See S6.6.2(b).

(c) *Oven.* See S6.6.2(c).

(d) Three glass test tubes approximately 22 mm. outside diameter by 175 mm. in length.

S6.11.3 *Reagents and materials.*

(a) *Benzoyl peroxide, reagent grade, 96 percent.* (Benzoyl peroxide that is brownish, or dusty, or has less than 90 percent purity, must be discarded.) Reagent strength may be evaluated by ASTM E298–68, ''Standard Methods for Assay of Organic Peroxides.''

(b) *Corrosion test strips.* Two sets of cast iron and aluminum metal test strips as described in appendix C of SAE Standard J1703b.

(c) *Tinfoil.* Four unused pieces of tinfoil approximately 12 mm. (½ inch) square and between 0.02 and 0.06 mm. (0.0008 and 0.0024 inch) in thickness. The foil shall be at least 99.9 percent tin and contain not more than 0.025 percent lead.

(d) *SBR cups.* Two unused, approximately one-eighth sections of a standard SAE SBR WC cup (as described in S7.6).

(e) *Machine screw and nut.* Two clean oil-free, No. 6 or 8–32×⅜– or ½–inch long (or equivalent metric size), round or fillister head, uncoated mild steel machine screws, with matching plain nuts.

S6.11.4 *Preparation.*

(a) *Corrosion test strips.* Prepare two sets of aluminum and cast iron test strips according to S6.6.4(a) except for assembly. Weigh each strip to the nearest 0.1 mg. and assemble a strip of each metal on a machine screw, separating the strips at each end with a piece of tinfoil. Tighten the nut enough to hold both pieces of foil firmly in place.

(b) *Test mixture.*Place 30±1 ml. of the brake fluid under test in a 22 by 175 mm. test tube. For all fluids except DOT 5 SBBF, add 0.060±.002 grams of benzoyl peroxide, and 1.50±0.05 ml. of distilled water. For DOT 5 SBBF, use test fluid humidified in accordance with S6.2, and add only the benzoyl peroxide. Stopper the tube loosely with a clean dry cork, shake, and place in an oven for 2 hours at 70°±2 °C. (158°±3.6 °F.). Shake every 15 minutes to effect solution of the peroxide, but do not wet cork. Remove the tube from the oven and allow to cool to 23°±5 °C. (73.4°±9 °F.) Begin testing according to paragraph S6.11.5 not later than 24 hours after removal of tube from oven.

S6.11.5 *Procedure.* Place a one-eighth SBR cup section in the bottom of each tube. Add 10 ml. of prepared test mixture to each test tube. Place a metal-strip assembly in each, the end of the strip without the screw resting on the rubber, and the solution covering about one-half the length of the strips. Stopper the tubes with clean dry corks and store upright for 70±2 hours at 23°±5 °C. (73.4°±9 °F.). Loosen the corks and place the tubes for 168±2 hours in an oven maintained at 70°±2 °C. (158°±3.6 °F.). Afterwards remove and disassemble strips. Examine the strips and note any gum deposits. Wipe the strips with a clean cloth wet with ethanol (isopropanol when testing DOT 5 fluids) and note any pitting, etching or roughening of surface disregarding stain or discoloration. Place the strips in a desiccator over silica gel or other suitable desiccant, at 23°±5 °C. (73.4°±9 °F.) for at least 1 hour. Again weigh each strip to the nearest 0.1 mg.

S6.11.6 *Calculation.* Determine corrosion loss by dividing the change in mass of each metal strip by the total surface area of each strip measured in square millimeters (mm^2), to the nearest square millimeter (mm^2). Average the results for the two strips of each type of metal, rounding to the nearest 0.05 mg. per 100 square millimeter (mm^2). If only one of the duplicates fails for any reason, run a second set of

duplicate samples. Both repeat samples shall meet all requirements of S5.1.11.

S6.12 *Effect on SBR cups.* The effects of a brake fluid in swelling, softening, and otherwise affecting standard SBR WC cups shall be evaluated by the following procedure.

S6.12.1 *Summary of the procedure.* Four standard SAE SBR WC cups are measured and their hardnesses determined. The cups, two to a jar, are immersed in the test brake fluid. One jar is heated for 70 hours at 70 °C. (158 °F), and the other for 70 hours at 120 °C (248 °F). Afterwards, the cups are washed, examined for disintegration, remeasured and their hardnesses redetermined.

S6.12.2 *Equipment and supplies.*

(a) *Oven.* See S6.6.2(c).

(b) *Glass jars and lids.* Two screw-top, straight-sided round glass jars, each having a capacity of approximately 250 ml. and inner dimensions of approximately 125 mm. in height and 50 mm. in diameter, and a tinned steel lid (no insert or organic coating).

(c) *SBR cups.* See S7.6.

S6.12.3 *Preparation.* Measure the base diameters of the SBR cups as described in S6.6.4(b), and the hardness of each as described in S7.4.

S6.12.4 *Procedure.* Wash the cups in 90 percent ethanol (isopropanol when testing DOT 5 fluids) (see S7.3), for not longer than 30 seconds and quickly dry with a clean, lint-free cloth. Using forceps, place two cups into each of the two jars; add 75 ml. of brake fluid to each jar and cap tightly. Place one jar in an oven held at 70°±2 °C. (158±3.6 °F.) for 70±2 hours. Place the other jar in an oven held at 120°±2 °C. (248°±3.6 °F.) for 70±2 hours. Allow each jar to cool for 60 to 90 minutes at 23°±5 °C. (73.4°±9 °F.). Remove cups, wash with ethanol (isopropanol when testing DOT 5 fluids) for not longer than 30 seconds, and quickly dry. Examine the cups for disintegration as evidenced by stickiness, blisters, or sloughing. Measure the base diameter and hardness of each cup within 15 minutes after removal from the fluid.

S6.12.5 *Calculation.* (a) Calculate the change in base diameter for each cup. If the two values, at each temperature, do not differ by more than 0.10 mm. (0.004 inch) average them to the nearest 0.02 mm. (0.001 inch). If the two values differ by more than 0.10 mm., repeat the test at the appropriate temperature and average the four values as the change in base diameter.

(b) Calculate the change in hardness for each cup. The average of the two values for each pair is the change in hardness.

(c) Note disintegration as evidenced by stickiness, blisters, or sloughing.

S6.13 *Stroking properties.* Evaluate the lubricating properties, component compatibility, resistance to leakage, and related qualities of a brake fluid by running one sample according to the following procedures.

S6.13.1 *Summary of the procedure.* Brake fluid is stroked under controlled conditions at an elevated temperature in a simulated motor vehicle hydraulic braking system consisting of three slave wheel cylinders and an actuating master cylinder connected by steel tubing. Referee standard parts are used. All parts are carefully cleaned, examined, and certain measurements made immediately prior to assembly for test. During the test, temperature, rate of pressure rise, maximum pressure, and rate of stroking are specified and controlled. The system is examined periodically during stroking to assure that excessive leakage of fluid is not occurring. Afterwards, the system is torn down. Metal parts and SBR cups are examined and remeasured. The brake fluid and any resultant sludge and debris are collected, examined, and tested.

S6.13.2 *Apparatus and equipment.*

Either the drum and shoe type of stroking apparatus (see Figure 1 of SAE Standard J1703b) except using only three sets of drum and shoe assemblies, or the stroking fixture type apparatus as shown in Figure 2 of SAE J1703Nov83, with the components arranged as shown in Figure 1 of SAE J1703Nov83. The following components are required.

(a) *Brake assemblies.* With the drum and shoe apparatus: three drum and shoe assembly units (SAE RM–29a) consisting of three forward brake shoes and three reverse brake shoes with linings and three front wheel brake drum assemblies with assembly component

parts. With stroking fixture type apparatus: three fixture units including appropriate adapter mounting plates to hold brake wheel cylinder assemblies.

(b) *Braking pressure actuation mechanism.* An actuating mechanism for applying a force to the master cylinder pushrod without side thrust. The amount of force applied by the actuating mechanism shall be adjustable and capable of applying sufficient thrust to the master cylinder to create a pressure of at least 6895 kPa (1,000 p.s.i.) in the simulated brake system. A hydraulic gage or pressure recorder, having a range of at least 0 to 6895 kPa (0 to 1,000 p.s.i), shall be installed between the master cylinder and the brake assemblies and shall be provided with a shutoff valve and with a bleeding valve for removing air from the connecting tubing. The actuating mechanism shall be designed to permit adjustable stroking rates of approximately 1,000 strokes per hour. Use a mechanical or electrical counter to record the total number of strokes.

(c) *Heated air bath cabinet.* An insulated cabinet or oven having sufficient capacity to house the three mounted brake assemblies or stroking fixture assemblies, master cylinder, and necessary connections. A thermostatically controlled heating system is required to maintain a temperature of 70°±5 °C (158°±9 °F) or 120°±5 °C (248°±9 °F). Heaters shall be shielded to prevent direct radiation to wheel or master cylinder.

(d) *Master cylinder* (*MC*) *assembly* (*SAE RM–15a*). One cast iron housing hydraulic brake system cylinder having a diameter of approximately 28 mm. (1⅛ inch) and fitted for a filler cap and standpipe (see S6.13.2(e)). The MC piston shall be made from SAE CA360 copperbase alloy (half hard). A new MC assembly is required for each test.

(e) *Filler cap and standpipe.* MC filler cap provided with a glass or uncoated steel standpipe. Standpipe must provide adequate volume for thermal expansion, yet permit measurement and adjustment of the fluid level in the system to ±3 ml. Cap and standpipe may be cleaned and reused.

(f) *Wheel cylinder (WC) assemblies (SAE RM–14a).* Three unused cast iron housing straight bore hydraulic brake WC assemblies having diameters of approximately 28 mm (1⅛ inch) for each test. Pistons shall be made from unanodized SAE AA 2024 aluminum alloy.

(g) *Micrometer.* Same as S6.6.2(d).

S6.13.3 *Materials.*

(a) *Standard SBR brake cups.* Six standard SAE SBR wheel cylinder test cups, one primary MC test cup, and one secondary MC test cup, all as described in S7.6, for each test.

(b) *Steel tubing.* Double wall steel tubing meeting SAE specification J527. A complete replacement of tubing is essential when visual inspection indicates any corrosion or deposits on inner surface of tubing. Tubing from master cylinder to one wheel cylinder shall be replaced for each test (minimum length .9 m.) Uniformity in tubing size is required between master cylinder and wheel cylinder. The standard master cylinder has two outlets for tubing, both of which must be used.

S6.13.4 *Preparation of test apparatus.*

(a) *Wheel cylinder assemblies.* Use unused wheel cylinder assemblies. Disassemble cylinders and discard cups. Clean all metal parts with ethanol (isopropanol when testing DOT 5 fluids). Inspect the working surfaces of all metal parts for scoring, galling, or pitting and cylinder bore roughness, and discard all defective parts. Remove any stains on cylinder walls with crocus cloth and ethanol (isopropanol when testing DOT 5 fluids). If stains cannot be removed, discard the cylinder. Measure the internal diameter of each cylinder at a location approximately 19 mm. (0.75 inch) from each end of the cylinder bore, taking measurements in line with the hydraulic inlet opening and at right angles to this centerline. Discard the cylinder if any of these four readings exceeds the maximum or minimum limits of 28.66 to 28.60 mm. (1.128 to 1.126 inch). Measure the outside diameter of each piston at two points approximately 90° apart. Discard any piston if either reading exceeds the maximum or minimum limits of 28.55 to 28.52 mm. (1.124 to 1.123 inch). Select parts to insure that the clearance between each piston and mating cylinder is within 0.08 to 0.13 mm. (0.003 to 0.005 inch). Use unused SBR cups. To remove dirt and debris, rinse the cups in 90 percent ethyl alcohol for not more

than 30 seconds and wipe dry with a clean lint-free cloth. Discard any cups showing defects such as cuts, molding flaws, or blisters. Measure the lip and base diameters of all cups with an optical comparator or micrometer to the nearest 0.02 mm. (0.001 inch) along the centerline of the SAE and rubber-type identifications and at right angles to this centerline. Determine base diameter measurements at least 0.4 mm. (0.015 inch) above the bottom edge and parallel to the base of the cup. Discard any cup if the two measured lip or base diameters differ by more than 0.08 mm. (0.003 inch). Average the lip and base diameters of each cup. Determine the hardness of all cups according to S7.4. Dip the rubber and metal parts of wheel cylinders, except housing and rubber boots, in the fluid to be tested and install them in accordance with the manufacturer's instructions. Manually stroke the cylinders to insure that they operate easily. Install cylinders in the simulated brake system.

(b) *Master cylinder assembly*. Use an unused master cylinder and unused standard SBR primary and secondary MC cups which have been inspected, measured and cleaned in the manner specified in S6.13.4(a), omitting hardness of the secondary MC cup. However, prior to determining the lip and base diameters of the secondary cup, dip the cup in test brake fluid, assemble on the MC piston, and maintain the assembly in a vertical position at 23°±5 °C. (73.4°±9 °F.) for at least 12 hours. Inspect the relief and supply ports of the master cylinder; discard the cylinder if ports have burrs or wire edges. Measure the internal diameter of the cylinder at two locations (approximately midway between the relief and supply ports and approximately 19 mm. (0.75 inch) beyond the relief port toward the bottom or discharge end of the bore), taking measurements at each location on the vertical and horizontal centerline of the bore. Discard the cylinder if any reading exceeds the maximum or minimum limits of 28.65 to 28.57 mm. (1.128 to 1.125 inch). Measure the outside diameter of each end of the master cylinder piston at two points approximately 90° apart. Discard the piston if any of these four readings exceed the maximum or minimum limits of 28.55 to 28.52 mm. (1.124 to 1.123 inch). Dip the rubber and metal parts of the master cylinder, except the housing and push rod-boot assembly, in the brake fluid and install in accordance with manufacturer's instructions. Manually stroke the master cylinder to insure that it operates easily. Install the master cylinder in the simulated brake system.

(c) *Assembly and adjustment of test apparatus*.

(1) When using a shoe and drum type apparatus, adjust the brake shoe toe clearances to 1.0±0.1 mm (0.040±0.004 inch). Fill the system with brake fluid, bleeding all wheel cylinders and the pressure gage to remove entrapped air. Operate the actuator manually to apply a pressure greater than the required operating pressure and inspect the system for leaks. Adjust the actuator and/or pressure relief valve to obtain a pressure of 6895 kPa±345 kPa (1,000±50 p.s.i.). A smooth pressure stroke pattern is required when using a shoe and drum type apparatus. The pressure is relatively low during the first part of the stroke and then builds up smoothly to the maximum stroking pressure at the end of the stroke, to permit the primary cup to pass the compensating hole at a relatively low pressure. Using stroking fixtures, adjust the actuator and/or pressure relief valve to obtain a pressure of 6895 kPa±345 kPa (1,000±50 p.s.i.).

(2) Adjust the stroking rate to 1,000±100 strokes per hour. Record the fluid level in the master cylinder standpipe.

S6.13.5 *Procedure*. Operate the system for 16,000±1,000 cycles at 23°±5 °C. (73.4°±9 °F.). Repair any leakage, readjust the brake shoe clearances, and add fluid to the master cylinder standpipe to bring to the level originally recorded, if necessary. Start the test again and raise the temperature of the cabinet within 6±2 hours to 120°±5 °C. (248°±9 °F.). During the test observe operation of wheel cylinders for improper functioning and record the amount of fluid required to replenish any loss, at intervals of 24,000 strokes. Stop the test at the end of 85,000 total recorded strokes. These totals shall include the number of strokes during operation at 23°±5 °C. (73.4°±9 °F.) and the number of

strokes required to bring the system to the operating temperature. Allow equipment to cool to room temperature. Examine the wheel cylinders for leakage. Stroke the assembly an additional 100 strokes, examine wheel cylinders for leakage and record volume loss of fluid. Within 16 hours after stopping the test, remove the master and wheel cylinders from the system, retaining the fluid in the cylinders by immediately capping or plugging the ports. Disassemble the cylinders, collecting the fluid from the master cylinder and wheel cylinders in a glass jar. When collecting the stroked fluid, remove all residue which has deposited on rubber and metal internal parts by rinsing and agitating such parts in the stroked fluid and using a soft brush to assure that all loose adhering sediment is collected. Clean SBR cups in ethanol (isopropanol when testing DOT 5 fluids) and dry. Inspect the cups for stickiness, scuffing, blistering, cracking, chipping, and change in shape from original appearance. Within 1 hour after disassembly, measure the lip and base diameters of each cylinder cup by the procedures specified in S6.13.4 (a) and (b) with the exception that lip or base diameters of cups may now differ by more than 0.08 mm. (0.003 inch). Determine the hardness of each cup according to S7.4. Note any sludge or gel present in the test fluid. Within 1 hour after draining the cylinders, agitate the fluid in a glass jar to suspend and uniformly disperse sediment and transfer a 100 ml. portion of this fluid to a centrifuge tube and determine percent sediment as described in S7.5. Allow the tube and fluid to stand for 24 hours, recentrifuge and record any additional sediment recovered. Inspect cylinder parts, note any gumming or any pitting on pistons and cylinder walls. Disregard staining or discoloration. Rub any deposits adhering to cylinder walls with a clean soft cloth wetted with ethanol (isopropanol when testing DOT 5 fluids) to determine abrasiveness and removability. Clean cylinder parts in ethanol (isopropanol when testing DOT 5 fluids) and dry. Measure and record diameters of pistons and cylinders according to S6.13.4(a) and (b). Repeat the test if mechanical failure occurs that may affect the evaluation of the brake fluid.

S6.13.6 *Calculation*. (a) Calculate the changes in diameters of cylinders and pistons (see S5.1.13(b)).

(b) Calculate the average decrease in hardness of the seven cups tested, as well as the individual values (see S5.1.13(c)).

(c) Calculate the increases in base diameters of the eight cups (see S5.1.13(e)).

(d) Calculate the lip diameter interference set for each of the eight cups by the following formula and average the eight values (see S5.1.13(f)).

$$[(D_1 - D_2)/(D_1 - D_3)] \times 100 = \text{PERCENTAGE LIP DIAMETER INTERFERENCE SET}$$

where:

D_1=Original lip diameter.
D_2=Final lip diameter.
D_3=Original cylinder bore diameter.

S6.14 *Container information*. Each container with information marked directly on the container surface or on a label (labels) affixed to the container pursuant to S5.2.2.2 or S5.2.2.3 is subjected to the following procedure:

(a) If the container has a label affixed to it, make a single vertical cut all the way through the label with the container in the vertical position.

(b) Immerse the container in the same brake fluid or hydraulic system mineral oil contained therein for 15 minutes at room temperature (23±5 °C; 73.4±9 °F).

(c) Within 5 minutes after removing the container from the fluid or oil, remove excess liquid from the surface of the container by wiping with a clean dry cloth.

S7. *Auxiliary test methods and reagent standards*.

S7.1 *Distilled water*. Nonreferee reagent water as specified in ASTM D1193–70, ''Standard Specifications for Reagent Water,'' or water of equal purity.

S7.2 *Water content of motor vehicle brake fluids*. Use analytical methods based on ASTM D1123–59, ''Standard Method of Test for Water in Concentrated Engine Antifreezes by the Iodine Reagent Method,'' for determining the water content of brake fluids, or other methods of analysis yielding comparable results. To be acceptable

for use, such other method must measure the weight of water added to samples of the SAE RM–66–04 and TEGME Compatibility Fluids within ± 15 percent of the water added for additions up to 0.8 percent by weight, and within ± 5 percent of the water added for additions greater than 0.8 percent by weight. The SAE RM–66–04 Compatibility Fluid used to prepare the samples must have an original ERBP of not less than 205 °C (401 °F) when tested in accordance with S6.1. The SAE TEGME fluid used to prepare the samples must have an original ERBP of not less than 240 °C (464 °F) when tested in accordance with S6.1.

S7.3 *Ethanol.* 95 percent (190 proof) ethyl alcohol, USP or ACS, or Formula 3–A Specially Denatured Alcohol of the same concentration (as specified at 27 CFR 21.35). For pretest washings of equipment, use approximately 90 percent ethyl alcohol, obtained by adding 5 parts of distilled water to 95 parts of ethanol.

S7.4 *Measuring the hardness of SBR brake cups.* Hardness measurements on SBR wheel cylinder cups and master cylinder primary cups shall be made by using the following apparatus and the following procedure.

S7.4.1 *Apparatus.*

(a) *Anvil.* A rubber anvil having a flat circular top 20±1 mm. (13/16±1/16 inch) in diameter, a thickness of at least 9 mm. (3/8 inch) and a hardness within 5 IRHDs of the SBR test cup.

(b) *Hardness tester.* A hardness tester meeting the requirements for the standard instrument as described in ASTM D1415–68, ''Standard Method of Test for International Hardness of Vulcanized Natural and Synthetic Rubbers,'' and graduated directly in IRHD units.

S7.4.2 *Procedure.* Make hardness measurements at 23°±2 °C. (73.4°±4 °F.). Equilibrate the tester and anvils at this temperature prior to use. Center brake cups lip side down on an anvil of appropriate hardness. Following the manufacturer's operating instructions for the hardness tester, make one measurement at each of four points 6 mm from the center of the cup and spaced 90° apart. Average the four values, and round off to the nearest IRHD.

S7.5 *Sediment by centrifuging.* The amount of sediment in the test fluid shall be determined by the following procedure.

S7.5.1 *Apparatus.*

(a) *Centrifuge tube.* Cone-shaped centrifuge tubes conforming to the dimensions given in Figure 6, and made of thoroughly annealed glass. The graduations shall be numbered as shown in Figure 6, and shall be clear and distinct. Scale-error tolerances and smallest graduations between various calibration marks are given in Table V and apply to calibrations made with air-free water at 20 °C. (68 °F.).

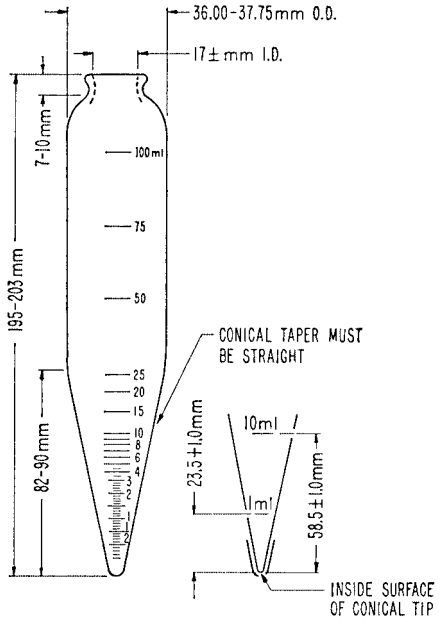

FIG. 6. ASTM 8-IN. CENTRIFUGE TUBE

TABLE V—CALIBRATION TOLERANCES FOR 8-INCH CENTRIFUGE TUBE

Range, ml	Subdivision, ml	Volume tolerance, ml
0 to 0.1	0.05	±0.02
Above 0.1 to 0.3	0.05	±0.03
Above 0.3 to 0.5	0.05	±0.05
Above 0.5 to 1	0.10	±0.05
Above 1 to 2	0.10	±0.10
Above 2 to 3	0.20	±0.10
Above 3 to 5	0.5	±0.20
Above 5 to 10	1.	±0.50
Above 10 to 25	5.	±1.00
Above 25 to 100	25.	±1.00

(b) *Centrifuge*. A centrifuge capable of whirling two or more filled centrifuge tubes at a speed which can be controlled to give a relative centrifugal force (r.c.f.) between 600 and 700 at the tip of the tubes. The revolving head, trunnion rings, and trunnion cups, including the rubber cushion, shall withstand the maximum centrifugal force capable of being delivered by the power source. The trunnion cups and cushions shall firmly support the tubes when the centrifuge is in motion. Calculate the speed of the rotating head using this equation:

$$r.p.m. = 265[\sqrt{25.4 \times r.c.f./d}]$$

Where:

r.c.f. = Relative centrifugal force, and

d = Diameter of swing, in millimeters, measured between tips of opposing tubes when in rotating position.

Table VI shows the relationship between diameter, swing, relative centrifugal force (r.c.f.), and revolutions per minute.

TABLE VI.—ROTATION SPEEDS FOR CENTRIFUGES OF VARIOUS DIAMETERS

Diameter of swing in millimeters [a]	r.p.m. at 600 r.c.f	r.p.m. at 700 r.c.f.
483	1490	1610
508	1450	1570
533	1420	1530
559	1390	1500

[a] Measured in millimeters between tips of opposite tubes when in rotating position.

S7.5.2 *Procedure*. Balance the corked centrifuge tubes with their respective trunnion cups in pairs by weight on a scale, according to the centrifuge manufacturer's instructions, and place them on opposite sides of the centrifuge head. Use a dummy assembly when one sample is tested. Then whirl them for 10 minutes, at a rate sufficient to produce a r.c.f. between 600 and 700 at the tips of the whirling tubes. Repeat until the volume of sediment in each tube remains constant for three consecutive readings.

S7.5.3 *Calculation*. Read the volume of the solid sediment at the bottom of the centrifuge tube and report the percent sediment by volume. Where replicate determinations are specified, report the average value.

S7.6 *Standard styrene-butadiene rubber (SBR) brake cups*. SBR brake cups for testing motor vehicle brake fluids shall be manufactured using the following formulation:

FORMULATION OF RUBBER COMPOUND

Ingredient	Parts by weight
SBR type 1503[a]	100
Oil furnace black (NBS 378)	40
Zinc oxide (NBS 370)	5
Sulfur (NBS 371)	0.25
Stearic Acid (NBS 372)	1
n-tertiary butyl-2-benzothiazole sulfenamide (NBS 384)	1
Symmetrical dibetanaphthyl-p-phenylenediamine	1.5
Dicumyl peroxide (40 percent on precipitated $CaCO_3$)[b]	4.5
Total	153.25

[a] Philprene 1503 has been found suitable.

[b] Use only within 90 days of manufacture and store at temperature below 27 °C. (80 °F.).

NOTE: The ingredients labeled (NBS) must have properties identical with those supplied by the National Bureau of Standards.

Compounding, vulcanization, physical properties, size of the finished cups, and other details shall be as specified in appendix B of SAE J1703b. The cups shall be used in testing brake fluids either within 6 months from date of manufacture when stored at room temperature below 30 °C. (86 °F.) or within 36 months from date of manufacture when stored at temperatures below minus 15 °C. (+5 °F.). After removal of cups from refrigeration they shall be conditioned base down on a flat surface for at least 12 hours at room temperature in order to allow cups to reach their true configuration before measurement.

S7.7 *Isopropanol*. ACS or reagent grade.

[36 FR 22902, Dec. 2, 1971]

EDITORIAL NOTE: For FEDERAL REGISTER citations affecting § 571.116, see the List of Sections Affected, which appears in the Finding Aids section of the printed volume and on GPO Access.

§ 571.117 Standard No. 117; Retreaded pneumatic tires.

S1. *Scope*. This standard specifies performance, labeling, and certification requirements for retreaded pneumatic passenger car tires.

S2. *Purpose*. The purpose of this standard is to require retreaded pneumatic passenger car tires to meet safety criteria similar to those for new pneumatic passenger car tires.

S3. *Application*. This standard applies to retreaded pneumatic tires for use on passenger cars manufactured after 1948.

S4. *Definitions*.

S4.1 *Casing* means a used tire to which additional tread may be attached for the purpose of retreading.

Retreaded means manufactured by a process in which a tread is attached to a casing.

S4.2 All terms defined in §§571.109 and 571.110 are used as defined therein.

S5. *Requirements*.

S5.1 *Retreaded tires*.

S5.1.1 Except as specified in S5.1.3, each retreaded tire, when mounted on a test rim of the width specified for the tire's size designation in appendix A of §571.109 shall comply with the following requirements of §571.109:

(a) S4.1 (Size and construction).

(b) S4.2.1 (General).

(c) S4.2.2.3 (Tubeless tire resistance to bead unseating).

(d) S4.2.2.4 (Tire strength).

S5.1.2 Except as specified in S5.1.3, each retreaded tire, when mounted on a test rim of the width specified for the tire's size designation in appendix A of §571.109, shall comply with the requirements of S4.2.2.2 of §571.109, except that the tire's section width shall not be more than 110 percent of the section width specified, and the tire's size factor shall be at least 97 percent of the size factor specified, in appendix A of §571.109 for the tire's size designation.

S5.1.3 Each retreaded tire shall be capable of meeting the requirements of S5.1.1 and S5.1.2 when mounted on any rim in accordance with those sections.

S5.1.4 No retreaded tire shall have a size designation, recommended maximum load rating, or maximum permissible inflation pressure that is greater than that originally specified on the casing pursuant to S4.3 of §571.109, or specified for the casing in Table I.

S5.2 *Casings*.

S5.2.1 No retreaded tire shall be manufactured with a casing—

(a) On which bead wire or cord fabric is exposed before processing.

(b) On which any cord fabric is exposed during processing, except that cord fabric that is located at a splice, i.e., where two or more segments of the same ply overlap, or cord fabric that is part of the belt material, may be exposed but shall not be penetrated or removed to any extent whatsoever.

S5.2.2 No retreaded tire shall be manufactured with a casing—

(a) From which a belt or ply, or part thereof, is removed during processing; or

(b) On which a belt or ply, or part thereof, is added or replaced during processing.

S5.2.3 Each retreaded tire shall be manufactured with a casing that bears, permanently molded at the time of its original manufacture into or onto the tire sidewall, each of the following:

(a) The symbol DOT;

(b) The size of the tire; and

(c) The actual number of plies or ply rating.

S5.2.4 [Reserved]

S6. *Certification and labeling*.

S6.1 Each manufacturer of a retreaded tire shall certify that its product complies with this standard pursuant to Section 30115 of Title 49, United States Code, by labeling the tire with the symbol DOT in the location specified in section 574.5 of this chapter.

S6.2 [Reserved]

S6.3 *Labeling*. Each retreaded tire shall bear permanent labeling through molding, branding, or other method that will produce a permanent label, or through the retention of the original casing labeling, in at least one location on the tire sidewall, in letters and numbers not less than 0.078 inch high, consisting of the following information:

(a) The tire's size designation;

(b) The tire's maximum permissible inflation pressure, either as it appears on the casing or as set forth in Table 1;

(c) The tire's maximum load, either as it appears on the casing or as set forth in Table 1;

(d) The actual number of plies in or the ply rating of the tire sidewall and, if different, the actual number of plies in or the ply rating of the tread area;

(e) The generic name of each cord material used in the plies of both sidewall and the tread area of the tire;

(f) The word ''tubeless'' if the tire is a tubeless tire, or the words ''tube-type'' if the tire is a tube-type tire;

(g) If the tire is of bias/belted construction, the words ''bias/belted;''

(h) If the tire is of radial construction, the word ''radial.''

The information shall either be retained from the casing used in the manufacture of the tire, or may be labeled onto the tire during the retreading process.

TABLE I—PLIES

Tire size	2 ply-4 ply (4 ply rating)		4 ply (6 ply rating)		4 ply (8 ply rating)	
	Maximum load	Maximum inflation pressure	Maximum load	Maximum inflation pressure	Maximum load	Maximum inflation pressure
6.00–13	1010	32	1080	36	1140	40
6.50–13	1150	32	1230	36	1300	40
7.00–13	1270	32	1360	36	1440	40
6.45–14	1120	32	1200	36	1270	40
6.95–14	1230	32	1310	36	1390	40
7.35–14	1360	32	1450	36	1540	40
7.75–14	1500	32	1600	36	1690	40
8.25–14	1620	32	1730	36	1830	40
8.55–14	1770	32	1890	36	2000	40
8.85–14	1860	32	1990	36	2100	40
5.60–15	970	32	1040	36	1105	40
5.90–15	1050	32	1130	36	1200	40
6.85–15	1230	32	1320	36	1390	40
7.35–15	1390	32	1480	36	1570	40
7.75–15	1490	32	1590	36	1690	40
8.15–15	1610	32	1720	36	1820	40
8.25–15	1620	32	1730	36	1830	40
8.45–15	1740	32	1860	36	1970	40
8.55–15	1770	32	1890	36	2000	40
8.85–15	1860	32	1980	36	2100	40
9.00–15	1900	32	2030	36	2150	40
9.15–15	1970	32	2100	36	2230	40
8.90–15	2210	32	2360	36	2500	40
A70–13	1060	32	1130	36	1200	40
D70–13	1320	32	1410	36	1490	40
D70–14	1320	32	1410	36	1490	40
E70–14	1400	32	1490	36	1580	40
F70–14	1500	32	1610	36	1700	40
G70–14	1620	32	1730	36	1830	40
H70–14	1770	32	1890	36	2010	40
J70–14	1860	32	1980	36	2100	40
L70–14	1970	32	2100	36	2230	40
C70–15	1230	32	1320	36	1390	40
D70–15	1320	32	1410	36	1490	40
E70–15	1400	32	1490	36	1580	40
F70–15	1500	32	1610	36	1700	40
G70–15	1620	32	1730	36	1830	40
H70–15	1770	32	1890	36	2010	40
J70–15	1860	32	1980	36	2100	40
K70–15	1900	32	2030	36	2150	40
L70–15	1970	32	2100	36	2230	40
165–13	1050	32	1130	36	1200	40
175–13	1150	32	1240	36	1350	40
185–13	1270	32	1390	36	1510	40
155R13	950	32	1015	36	1075	40
155R14	1010	32	1080	36	1140	40
155R15	1015	32	1085	36	1150	40
165R13	1010	32	1080	36	1140	40
165R14	1120	32	1200	36	1270	40
165R15	1130	32	1200	36	1270	40
175R14	1230	32	1310	36	1390	40
185R14	1360	32	1450	36	1540	40
185/70R13	1090	32	1140	36	1190	40
145–14 [1]	865	32	905	36	935	40
145–15	895	32	940	36	975	40
195–15	1550	32	1680	36	1820	40
205–15	1700	32	1840	36	2000	40

[1] Dash Radial—Not an ''R'' Radial.

[37 FR 5952, Mar. 23, 1972, as amended at 37 FR 11775, June 14, 1972; 38 FR 2982, Jan. 31, 1973; 38 FR 6999, Mar. 15, 1973; 38 FR 9688, Apr. 19, 1973; 39 FR 1443, Jan. 9, 1974; 39 FR 3553, Jan. 28, 1974; 39 FR 36016, Oct. 7, 1974; 39 FR 39884, Nov. 12, 1974; 61 FR 29494, June 11, 1996]

EDITORIAL NOTE: For an interpretation of §571.117, see 38 FR 10940, May 3, 1973.

EFFECTIVE DATE NOTE: At 63 FR 28920, May 27, 1998, §571.117 was amended by revising S6.3, and Table 1, effective May 27, 2003. The revised text is set forth as follows:

§571.117 Standard No. 117, Retreaded pneumatic tires.

* * * * *

S6.3 Each retreaded tire shall bear permanent labeling through molding, branding, or other method that will produce a permanent label, or through the retention of the original casing labeling, in at least one location on the tire sidewall, in letters and numbers not less than 2 mm (0.078 inch) high, consisting of the following information:

* * * * *

TABLE I.—PLIES

Tire Size	2ply–4ply (4 ply rating)				4 ply (6 ply rating)				4 ply (8 ply rating)			
	Maximum load		Maximum Inflation Pressure		Maximum load		Maximum Inflation Pressure		Maximum load		Maximum Inflation Pressure	
	lb	kg	psi	kPa	lb	kg	psi	kPa	lb	kg	psi	kPa
6.00–13	1010	458	32	220	1080	499	36	250	1140	517	40	275
6.50–13	1150	552	32	220	1230	558	36	250	1300	590	40	275
7.00–13	1270	576	32	220	1360	617	36	250	1440	653	40	275
6.45–14	1120	508	32	220	1200	544	36	250	1270	576	40	275
6.95–14	1230	558	32	220	1310	594	36	250	1390	630	40	275
7.35–14	1360	617	32	220	1450	658	36	250	1540	698	40	275
7.75–14	1500	680	32	220	1600	726	36	250	1690	767	40	275
8.25–14	1620	735	32	220	1730	785	36	250	1830	830	40	275
8.55–14	1770	803	32	220	1890	857	36	250	2000	907	40	275
8.85–14	1860	844	32	220	1990	903	36	250	2100	953	40	275
5.60–15	0970	440	32	220	1040	472	36	250	1105	501	40	275
5.90–15	1050	476	32	220	1130	513	36	250	1200	544	40	275
6.85–15	1230	558	32	220	1320	599	36	250	1390	630	40	275
7.35–15	1390	630	32	220	1480	671	36	250	1570	712	40	275
7.75–15	1490	676	32	220	1590	721	36	250	1690	767	40	275
8.15–15	1610	730	32	220	1720	780	36	250	1820	826	40	275
8.25–15	1620	735	32	220	1730	785	36	250	1830	830	40	275
8.45–15	1740	789	32	220	1860	844	36	250	1970	894	40	275
8.55–15	1770	803	32	220	1890	857	36	250	2000	907	40	275
8.85–15	1860	844	32	220	1980	898	36	250	2100	953	40	275
9.00–15	1900	862	32	220	2030	721	36	250	2150	975	40	275
9.15–15	1970	894	32	220	2100	953	36	250	2230	1012	40	275
8.90–15	2210	1002	32	220	2360	1070	36	250	2500	1134	40	275
A70–13	1060	481	32	220	1130	513	36	250	1200	544	40	275
D70–13	1320	599	32	220	1410	640	36	250	1490	676	40	275
D70–14	1320	599	32	220	1410	640	36	250	1490	676	40	275
E70–14	1400	635	32	220	1490	676	36	250	1580	717	40	275
F70–14	1500	680	32	220	1610	730	36	250	1700	771	40	275
G70–14	1620	735	32	220	1730	785	36	250	1830	830	40	275
H70–14	177	803	32	220	1890	857	36	250	2010	912	40	275
J70–14	1860	844	32	220	1980	898	36	250	2100	953	40	275
L70–14	1970	894	32	220	2180	989	36	250	2230	1012	40	275
C70–15	1230	558	32	220	1320	599	36	250	1390	630	40	275
D70–15	1320	599	32	220	1410	640	36	250	1490	676	40	275
E70–15	1400	635	32	220	1490	676	36	250	1580	717	40	275
F70–15	1500	680	32	220	1610	730	36	250	1700	771	40	275
G70–15	1620	735	32	220	1730	785	36	250	1830	830	40	275
H70–15	1770	803	32	220	1890	857	36	250	2010	912	40	275
J70–15	1860	844	32	220	1980	898	36	250	2100	953	40	275
K70–15	1900	862	32	220	2030	721	36	250	2150	975	40	275
L70–15	1970	894	32	220	2100	953	36	250	2230	1012	40	275
165–13	1050	476	32	220	1130	513	36	250	1200	544	40	275

175–13	1150	552	32	220	1240	562	36	250	1350	612	40	275
185–13	1270	576	32	220	1390	630	36	250	1510	685	40	275
155R13	950	431	32	220	1015	460	36	250	1075	488	40	275
155R14	1010	458	32	220	1080	499	36	250	1140	517	40	275
155R14	1015	460	32	220	1085	492	36	250	1150	552	40	275
165R13	1010	458	32	220	1080	499	36	250	1140	517	40	275
165R14	1120	508	32	220	1200	544	36	250	1370	621	40	275
165R15	1130	513	32	220	1200	544	36	250	1270	576	40	275
175R14	1230	558	32	220	1310	594	36	250	1390	630	40	275
185R14	1360	617	32	220	1450	658	36	250	1540	698	40	275
185/70R13	1090	494	32	220	1140	517	36	250	1190	540	40	275
145–14 [1]	865	392	32	220	905	411	36	250	935	424	40	275
145–15	895	406	32	220	940	426	36	250	975	442	40	275
195–15	1550	703	32	220	1680	762	36	250	1820	826	40	275
205–15	1770	803	32	220	1840	835	36	250	2000	907	40	275

[1] Dash Radial—Not an ''R'' Radial.

§ 571.118 Standard No. 118; Power-operated window, partition, and roof panel systems.

S1. *Purpose and scope.* This standard specifies requirements for power operated window, partition, and roof panel systems to minimize the likelihood of death or injury from their accidental operation.

S2. *Application.* This standard applies to passenger cars, multipurpose passenger vehicles, and trucks with a gross vehicle weight rating of 4536 kilograms or less. The standard's requirements for power-operated roof panel systems need not be met for vehicles manufactured before September 1, 1993.

S3. *Definition.* ''Power operated roof panel systems'' mean moveable panels in the vehicle roof which close by vehicle supplied power either by a sliding or hinged motion, and do not include convertible top systems.

S4. *Operating requirements.* Except as provided in S5, power operated window, partition, or roof panel systems may be closed only in the following circumstances:

(a) When the key that controls activation of the vehicle's engine is in the ''ON'', ''START'', or ''ACCESSORY'' position;

(b) By muscular force unassisted by vehicle supplied power;

(c) Upon continuous activation by a locking system on the exterior of the vehicle;

(d) Upon continuous activation of a remote actuation device, provided that the remote actuation device shall be incapable of closing the power window, partition or roof panel from a distance of more than 6 meters from the vehicle;

(e) During the interval between the time the locking device which controls the activation of the vehicle's engine is turned off and the opening of either of a two-door vehicle's doors or, in the case of a vehicle with more than two doors, the opening of either of its front doors;

(f) If the window, partition, or roof panel is in a static position before starting to close and in that position creates an opening so small that a 4 mm diameter semi-rigid cylindrical rod cannot be placed through the opening at any location around its edge in the manner described in S5(b); or

(g) Upon continuous activation of a remote actuation device, provided that the remote actuation device shall be incapable of closing the power window, partition or roof panel if the device and the vehicle are separated by an opaque surface and provided that the remote actuation device shall be incapable of closing the power window, partition or roof panel from a distance of more than 11 meters from the vehicle.

S5. (a) Notwithstanding S4, a power operated window, partition or roof panel system may close if it meets the following requirements—

(1) While closing, the window, partition or roof panel system must reverse direction before contacting, or before exerting a squeezing force of 100 newtons or more on, a semi-rigid cylindrical rod from 4 mm to 200 mm in diameter that has the force-deflection ratio described in S5(c), and that is placed through the window, partition or roof panel system opening at any location, in the manner described in S5(b); and

(2) Upon such reversal, the window, partition or roof panel system must open to one of the following positions, at the manufacturer's option:

(i) A position that is at least as open as the position at the time closing was initiated;

(ii) A position that is not less than 125 millimeters more open than the position at the time the window reversed direction; or

(iii) A position that permits a semi-rigid cylindrical rod that is 200 mm in diameter to be placed through the opening at the same contact point(s) as the rod described in S5(a)(1).

(b) The test rod is placed through the window, partition or roof panel opening from the inside of the vehicle such that the cylindrical surface of the rod contacts any part of the structure with which the window, partition or roof panel mates. Typical placements of test rods are illustrated in Figure 1.

(c) The force-deflection ratio of the test rod is at least 65 N/mm for a rod 25 mm or smaller in diameter, and at least 20 N/mm for a rod larger than 25 mm in diameter.

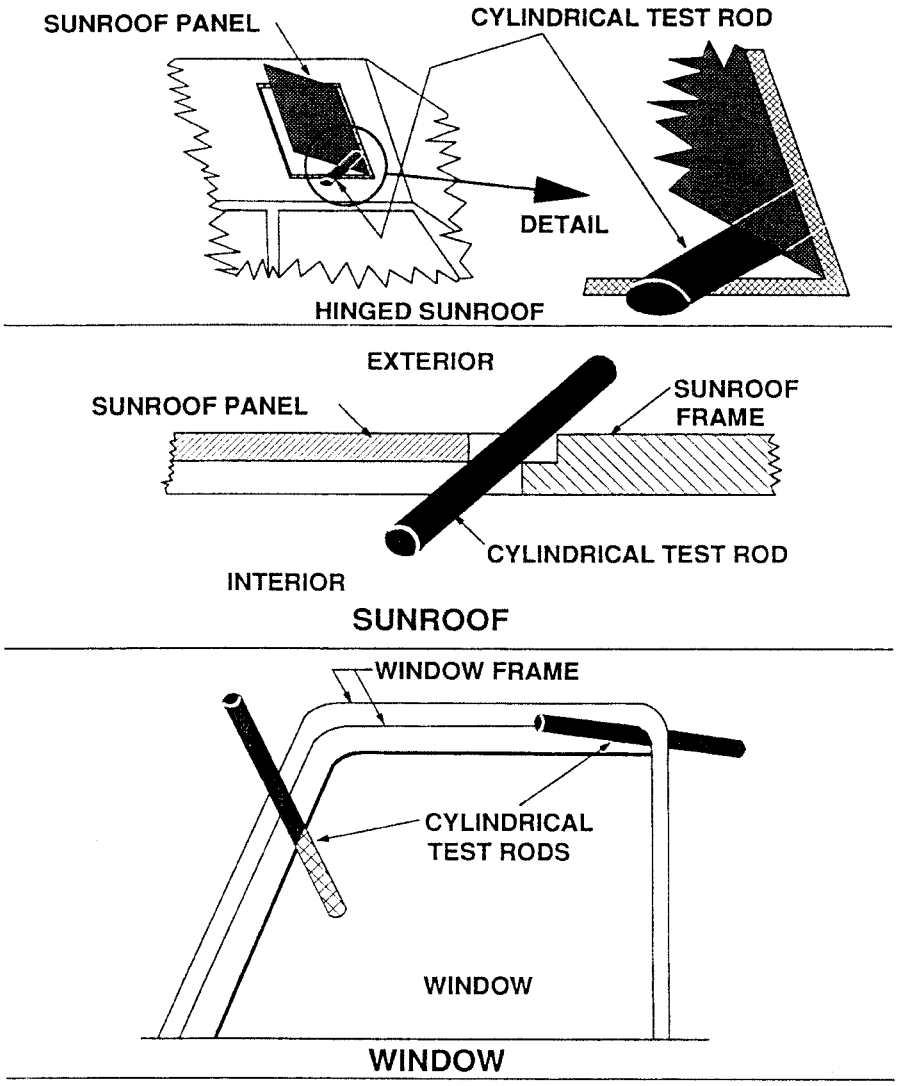

Figure 1 - Typical Cylindrical Test Rods Protruding through Sunroof and Window Daylight Openings

[56 FR 15294, Apr. 16, 1991, as amended at 57 FR 23963, June 5, 1992; 57 FR 28012, June 23, 1992; 58 FR 16785, Mar. 31, 1993; 60 FR 13644, Mar. 14, 1995]

§571.119 Standard No. 119; New pneumatic tires for vehicles other than passenger cars.

S1. *Scope.* This standard establishes performance and marking requirements for tires for use on multipurpose passenger vehicles, trucks, buses, trailers, and motorcycles.

S2. *Purpose.* The purpose of this standard is to provide safe operational

performance levels for tires used on motor vehicles other than passenger cars, and to place sufficient information on the tires to permit their proper selection and use.

S3. *Application*. This standard applies to new pneumatic tires designed for highway use on multipurpose passenger vehicles, trucks, buses, trailers, and motorcycles manufactured after 1948.

S4. *Definitions*. All terms defined in the Act and the rules and standards issued under its authority are used as defined therein.

Light truck tire means a tire designated by its manuafacturer as primarily intended for use on lightweight trucks or multipurpose passenger vehicles.

Model rim assembly means a test device that (a) includes a rim which conforms to the published dimensions of a commercially available rim, (b) includes an air valve assembly when used for testing tubeless tires or an innertube and flap (as required) when used for testing tubetype tires, and (c) undergoes no permanent rim deformation and allows no loss of air through the portion that it comprises of the tire-rim pressure chamber when a tire is properly mounted on the assembly and subjected to the requirements of this standard.

S5. *Tire and rim matching information*.

S5.1 Each manufacturer of tires shall ensure that a listing of the rims that may be used with each tire that he produces is provided to the public. For purposes of this section each rim listing shall include dimensional specifications and a diagram of the rim. However a listing compiled in accordance with paragraph (a) of this section need not include dimensional specifications or a diagram of a rim if the rim's dimensional specifications and diagram are contained in each listing published in accordance with paragraph (b) of this standard. The listing shall be in one of the following forms:

(a) Listed by manufacturer name or brand name in a document furnished to dealers of the manufacturer's tires, to any person upon request, and in duplicate to: Docket Section, National Highway Traffic Safety Administration, 400 Seventh Street SW., Washington, DC 20590; or

(b) Contained in publications, current at the date of manufacture of the tire or any later date, of at least one of the following organizations:

The Tire and Rim Association
The European Tyre and Rim Technical Organisation
Japan Automobile Tire Manufacturers' Association, Inc.
Deutsche Industrie Norm
British Standards Institution
Scandinavian Tire and Rim Organization
The Tyre and Rim Association of Australia

S5.2 Information contained in a publication specified in S5.1(b) which lists general categories of tires and rims by size designation, type of construction, and/or intended use, shall be considered to be manufacturer's information pursuant to S5.1 for the listed tires, unless the publication itself or specific information provided according to S5.1(a) indicates otherwise.

S6. *Requirements*. Each tire shall be capable of meeting any of the applicable requirements set forth below, when mounted on a model rim assembly corresponding to any rim designated by the tire manufacturer for use with the tire in accordance with S5. However, a particular tire need not meet further requirements after having been subjected to and met the endurance test (S6.1), strength test (S6.2), or high speed performance test (S6.3).

S6.1 *Endurance*.

S6.1.1 Prior to testing in accordance with the procedures of S7.2, a tire shall exhibit no visual evidence of tread, sidewall, ply, cord, innerliner, or bead separation, chunking, broken cords, cracking, or open splices.

S6.1.2 When tested in accordance with the procedures of S7.2:

(a) There shall be no visual evidence of tread, sidewall, ply, cord, innerliner, or bead separation, chunking, broken cords, cracking, or open splices.

(b) The tire pressure at the end of the test shall be not less than the initial pressure specified in S7.2(a).

S6.2 *Strength*. When tested in accordance with the procedures of S7.3 a tire's average breaking energy value shall be not less than the value specified in Table II for that tire's size and load range.

S6.3 *High speed performance*. When tested in accordance with the procedures of S7.4, a tire shall meet the requirements set forth in S6.1.1 and S6.1.2 (a) and (b). However, this requirement applies only to motorcycle tires and to non-speed-restricted tires of 14.5-in nominal rim diameter or less marked load range A, B, C, or D.

S6.4 *Treadwear indicators*. Except as specified below, each tire shall have at least six treadwear indicators spaced approximately equally around the circumference of the tire that enable a person inspecting the tire to determine visually whether the tire has worn to a tread depth of one-sixteenth of an inch. Tires with 12-inch or smaller rim diameter shall have at least three such treadwear indicators. Motorcycle tires shall have at least three such indicators which permit visual determination that the tire has worn to a tread depth of one-thirty-second of an inch.

S6.5 *Tire markings*. Except as specified below, each tire shall be marked on each sidewall with the information specified in paragraphs (a) through (j) of this section. The markings shall be placed between the maximum section width (exclusive of sidewall decorations or curb ribs) and the bead on at least one sidewall, unless the maximum section width of the tire is located in an area which is not more than one-fourth of the distance from the bead to the shoulder of the tire. If the maximum section width falls within that area, the markings shall appear between the bead and a point one-half the distance from the bead to the shoulder of the tire, on at least one sidewall. The markings shall be in letters and numerals not less than 0.078 inch high and raised above or sunk below the tire surface not less than 0.015 inch, except that the marking depth shall be not less than 0.010 inch in the case of motorcycle tires. The tire identification and the DOT symbol labeling shall comply with part 574 of this chapter. Markings may appear on only one sidewall and the entire sidewall area may be used in the case of motorcycle tires and recreational, boat, baggage, and special trailer tires.

(a) The symbol DOT, which shall constitute a certification that the tire conforms to applicable Federal motor vehicle safety standards. This symbol may be marked on only one sidewall.

(b) The tire identification number required by part 574 of this chapter. This number may be marked on only one sidewall.

(c) The tire size designation as listed in the documents and publications designated in S5.1.

(d) The maximum load rating and corresponding inflation pressure of the tire, shown as follows:

(Mark on tires rated for single and dual load):
Max load single _____ lbs at _____ psi cold.
Max load dual _____ lbs at _____ psi cold.
(Mark on tires rated only for single load:)
Max load _____ lbs at _____ psi cold.

(e) The speed restriction of the tire, if 55 mi/h or less, shown as follows:

Max speed _____ mph.

(f) The actual number of plies and the composition of the ply cord material in the sidewall and, if different, in the tread area;

(g) The words ''tubeless'' or ''tube type'' as applicable.

(h) The word ''regroovable'' if the tire is designed for regrooving.

(i) The word ''radial'' if a radial tire.

(j) The letter designating the tire load range.

S6.6 *Maximum load rating*. If the maximum load rating for a particular tire size is shown in one or more of the publications described in S5.1(b), each tire of that size designation shall have a maximum load rating that is not less than the published maximum load rating, or if there are differing published ratings for the same tire size designation, not less than the lowest published maximum load rating for the size designation.

S7. *Test procedures*.

S7.1 *General conditions*.

S7.1.1 The tests are performed using an appropriate new tube, tube valve and flap assembly (as required) that allows no loss of air for testing of tube-type tires under S7.2, S7.3, and S7.4, and tubeless tires under S7.3.

S7.1.2 The tire must be capable of meeting the requirements of S7.2 and S7.4 when conditioned to a temperature of 95 °F for 3 hours before the test is conducted, and with an ambient temperature maintained at 95 °F during all

phases of testing. The tire must be capable of meeting the requirements of S7.3 when conditioned at a temperature of 70 °F for 3 hours before the test is conducted.

S7.2 *Endurance.* (a) Mount the tire on a model rim assembly and inflate it to the inflation pressure corresponding to the maximum load rating marked on the tire. Use a single maximum load value when the tire is marked with both single and dual maximum load.

(b) After conditioning the tire-rim assembly in accordance with S7.1.2, adjust the tire pressure to that specified in (a) immediately before mounting the tire rim assembly.

(c) Mount the tire-rim assembly on an axle and press it against a flat-faced steel test wheel that is 67.23 inches in diameter and at least as wide as the tread of the tire.

(d) Apply the test load and rotate the test wheel as indicated in Table III for the type of tire tested conducting each successive phase of the test without interruption.

(e) Immediately after running the tire the required time, measure the tire inflation pressure. Remove the tire from the model rim assembly, and inspect the tire.

S7.3 *Strength.* (a) Mount the tire on a model rim assembly and inflate it to the pressure corresponding to the maximum load, or maximum dual load where there is both a single and dual load marked on the tire. If the tire is tubeless, a tube may be inserted to prevent loss of air during the test in the event of puncture.

(b) After conditioning the tire-rim assembly in accordance with S7.1.2, adjust the tire pressure to that specified in (a).

(c) Force a cylindrical steel plunger, with a hemispherical end and of the diameter specified in Table I for the tire size, perpendicularly into a raised tread element as near as possible to the centerline of the tread, at a rate of 2 inches per minute, until the tire breaks or the plunger is stopped by the rim.

(d) Record the force and the distance of penetration just before the tire breaks, or if it fails to break, just before the plunger is stopped by the rim.

(e) Repeat the plunger application at 72° intervals around the circumference of the tire, until five measurements are made. However, in the case of tires of 12-in rim diameter or less, repeat the plunger application at 120° intervals around the circumference of the tire, until three measurements are made.

(f) Compute the breaking energy for each test point by the following formula:

$$W = (FP / 2)$$

where:

W = Breaking energy,
F = Force in pounds, and
P = Penetration in inches.

(g) Determine the average breaking energy value for the tire by computing the average of the values obtained in accordance with paragraph (f).

S7.4 *High speed performance.* (a) Perform steps (a) through (c) of S7.2.

(b) Apply a force of 88 percent of the maximum load rating marked on the tire (use single maximum load value when the tire is marked with both single and dual maximum loads), and rotate the test wheel at 250 rpm for 2 hours.

(c) Remove the load, allow the tire to cool to 95 °F., and then adjust the pressure to that marked on the tire for single tire use.

(d) Reapply the same load, and without interruption or readjustment of inflation pressure, rotate the test wheel at 375 rpm for 30 minutes, then at 400 rpm for 30 minutes, and then at 425 rpm for 30 minutes.

(e) Immediately after running the tire the required time, measure the tire inflation pressure. Remove the tire from the model rim assembly, and inspect the tire.

TABLE I—STRENGTH TEST PLUNGER DIAMETER

	Plunger diameter (inches)
Tire type:	
Light truck	3/4
Motorcycle	5/16

TABLE I—STRENGTH TEST PLUNGER DIAMETER—Continued

	Plunger diameter (inches)
Tires for 12-inch or smaller rims, except motorcycle	¾
Tires other than the above types:	
Tubeless:	
17.5-inch or smaller rims	¾
Larger than 17.5-inch rims:	
Load range F or less	1¼
Load range over F	1½
Tube type:	
Load range F or less	1¼
Load range over F	1½

TABLE II—MINIMUM STATIC BREAKING ENERGY (INCH-POUNDS)

Load range							
Tire characteristic	Motorcycle	All 12 inch or smaller rim size	Light truck, 17.5 inch or smaller rim tubless	Tube type	Tubeless	Tube type	Tubeless
Plunger diameter (inch)		5/16	¾	1¼		1½	
A	150	600	2,000	...	...	...	...
B	300	1,200	2,600	...	...	...	...
C	400	1,800	3,200	6,800	5,100	...	...
D	...	2,400	4,550	7,900	6,500	...	...
E	...	3,000	5,100	12,500	8,600	...	...
F	...	3,600	5,700	15,800	12,500	...	...
G	...	...	6,300	...	...	20,200	15,000
H	...	...	6,800	...	...	23,000	18,500
J	...	...	...	...	...	25,000	19,500
L	...	...	...	...	...	27,000	...
M	...	...	...	...	...	28,500	...
N	...	...	...	...	...	30,000	...

NOTE: For rayon cord tires, applicable energy values are 60 percent of those in table.

TABLE III—ENDURANCE TEST SCHEDULE

Description	Load range	Test wheel speed (r/m)	Test load: Percent of maximum load rating			Total best revolutions (thousands)
			I—7 hours	II—16 hours	III—24 hours	
Speed-restricted service (miles per hour):						
55	All	125	66	84	101	352.0
50	C,D	150	75	97	114	423.0
	E,F,G,H,J,L	100	66	84	101	282.5
35	All	75	66	84	101	211.0
Motorcycle	All	250	[1] 100	[2] 108	117	510.0
All other	A,B,C,D	250	[1] 75	[2] 97	114	...
	E	200	70	88	106	564.0
	F	200	66	84	101	564.0
	G	175	66	84	101	493.5 —
	H,J,L,N	150	66	84	101	423.5

[1] 4 hr. for tire sizes subject to high speed requirements (S6.3).
[2] 6 hr. for tire sizes subject to high speed requirements (S6.3).

(Secs. 113, 201, 80 Stat. 718 (15 U.S.C. 1402, 1421); secs. 103, 112, 119, 201, 203, Pub. L. 89–563, 80 Stat. 718 (15 U.S.C. 1392, 1401, 1421, 1423); delegation of authority at 49 CFR 1.50)

[38 FR 31301, Nov. 13, 1973, as amended at 39 FR 4087, Feb. 1, 1974; 39 FR 5192, Feb. 11, 1974; 39 FR 12105, Apr. 3, 1974; 39 FR 19481, June 3, 1974; 40 FR 5530, Feb. 6, 1975; 43 FR 30542, July 17, 1978; 43 FR 50441, Oct. 30, 1978; 48 FR 25209, June 6, 1983; 50 FR 10773, Mar. 18, 1985; 54 FR 38386, Sept. 18, 1989; 61 FR 29494, June 11, 1996]

EFFECTIVE DATE NOTE:

EFFECTIVE DATE NOTE: At 63 FR 28921, May 27, 1998, § 571.119 was amended by revising S6.3 and S6.4; revising in S6.5, the introductory paragraph and paragraphs (d) and (e); revising S7.1.2; revising in S7.2, paragraph (c); revising in S7.3, paragraphs (c), (e), and (f); and revising in S7.4, paragraph (c), and by revising Table I—''Strength Test Plunger Diameter'', Table II—''Minimum Static Breaking Energy (Inch-Pounds)'', and Table III—''Endurance Test Schedule'' that follow paragraph (e) of S7.4, effective May 27, 2003. For the convenience of the user, the revised text follows:

§ 571.119 Standard No. 119, New pneumatic tires for vehicles other than passenger cars.

* * * * *

S6.3 *High speed performance.* When tested in accordance with the procedures of S7.3, a tire shall meet the requirements set forth in S6.1.1 and S6.1.2(a) and (b). However, this requirement applies only to motorcycle tires and to non-speed-restricted tires of nominal rim diameter code 14.5 or less marked load range A, B, C, or D.

S6.4 *Treadwear indicators.* Except as specified in this paragraph, each tire shall have at least six treadwear indicators spaced approximately equally around the circumference of the tire that enable a person inspecting the tire to determine visually whether the tire has worn to a tread depth of 1.6 mm (one-sixteenth of an inch). Tires with a rim diameter code of 12 or smaller shall have at least three such treadwear indicators. Motorcycle tires shall have at least three such indicators which permit visual determination that the tire has worn to a tread depth of 0.8 mm (one-thirty-second of an inch).

S6.5 *Tire markings.* Except as specified in this paragraph, each tire shall be marked on each sidewall with the information specified in paragraphs (a) through (j) of this section. The markings shall be placed between the maximum section width (exclusive of sidewall decorations or curb ribs) and the bead on at least one sidewall, unless the maximum section width of the tire is located in an area which is not more than one-fourth of the distance from the bead to the shoulder of the tire. If the maximum section width falls within that area, the markings shall appear between the bead and a point one-half the distance from the bead to the shoulder of the tire, on at least one sidewall. The markings shall be in letters and numerals not less than 2 mm (0.078 inch) high and raised above or sunk below the tire surface not less that 0.4 mm (0.015 inch), except that the marking depth shall be not less than 0.25mm (0.010 inch) in the case of motorcycle tires. The beling shall comply with part 574 of this chapter. Markings may appear on only one sidewall and the entire sidewall area may be used in the case of motorcycle tires and recreational, boat, baggage, and special trailer tires.

* * * * *

(d) The maximum load rating and corresponding inflation pressure of the tire, shown as follows:

(Mark on tires rated for single and dual load): Max load single ____kg (____lb) at ____kPa (____psi) cold. Max load dual ____kg (____lb) at ____kPa (____psi) cold.

(Mark on tires rated only for single load): Max load ____kg (____lb) at ____kPa (____psi) cold.

(e) The speed restriction of the tire, if 88 km/h (55 mph) or less, shown as follows:

Max speed ____km/h (____mph).

* * * * *

S7.1.2 The tire must be capable of meeting the requirements of S7.2 and S7.4 when conditioned to a temperature of 35 °C (95 °F) for 3 hours before the test is conducted, and with an ambient temperature maintained at 35 °C (95 °F) during all phases of testing. The tire must be capable of meeting the requirements of S7.3 when conditioned at a temperature of 21 °C (70 °F) for 3 hours before the test is conducted.

S7.2 *Endurance.*

* * * * *

(c) Mount the tire-rim assembly on an axle and press it against a flat-faced steel test wheel that is 1708 mm (67.23 inches) in diameter and at least as wide as the tread of the tire.

* * * * *

S7.3 *Strength.*

* * * * *

(c) Force a cylindrical steel plunger, with a hemispherical end and of the diameter specified in Table I for the tire size, perpendicularly into a raised tread element as near as possible to the centerline of the tread, at a rate of 50 mm (2 inches) per minute, until the tire breaks or the plunger is stopped by the rim.

* * * * *

(e) Repeat the plunger application at 72° intervals around the circumference of the tire, until five measurements are made.

However, in the case of tires of 12 inch rim diameter code or smaller, repeat the plunger application at 120° intervals around the circumference of the tire, until three measurements are made.

(f) Compute the breaking energy for each test point by one of the two following formulas:

(1) $W = [(F \times P)/2] \times 10^{-3}$ (joules)

Where:

W = Breaking energy (in joules) (kJ)
F = Force in newtons (N) and
P = Penetration in millimeters (mm), or;

(2) $W = (FP/2)$

Where:

W = Breaking energy in inch-pounds,
F = Force in pounds,
P = Penetration in inches.

* * * * *

S7.4 *High speed performance.*

* * * * *

(c) Remove the load, allow the tire to cool to 35 °C (95 °F), and then adjust the pressure to that marked on the tire for single tire use.

* * * * *

TABLE I.—STRENGTH TEST PLUNGER DIAMETER

	Plunger diameter	
	(mm)	(inches)
Tire type:		
Light truck	19.05	3/4
Motorcycle	.....	5/16
Tires for 12 rim diameter code or smaller rims except motorcycle	19.05	3/4
Tires other than the above types:		
Tubeless:		
17.5 diameter code or smaller rims	19.05	3/4
Larger than 17.5 rim diameter code rims:		
Load range F or less	31.75	1 1/4
Load range over F	38.10	1 1/2
Tube type:		
Load range F or less	31.75	1 1/4
Load range over F	38.10	1 1/2

TABLE II.—MINIMUM STATIC BREAKING ENERGY (JOULES (J) AND INCH-POUNDS (INCH-LBS))

Load range			All 12 rim diameter code or smaller rim size		Light truck 17.5 rim diameter code or smaller rim tubeless		Tube type		Tubeless		Tube type		Tubeless	
Tire characteristic	Motorcycle													
Plunger diameter (mm and inches)	7.94 J	5/16″ inch-lbs	19.05 J	3/4″ inch-lbs	19.05 J	3/4″ inch-lbs	31.75 J	1¼″ inch-lbs	J	inch-lbs	38.10 J	1½″ inch-lbs	J	inch-lbs
A	16	150	67	600	225	2,000	.....	.....	.....	.....	.....	.....	.....	.....
B	33	300	135	1,200	293	2,600	.....	.....	.....	.....	.....	.....	.....	.....
C	45	400	203	1,800	361	3,200	768	6,800	576	5,100	.....	.....	.....	.....
D	.....	.....	271	2,400	514	4,550	892	7,900	734	6,500	.....	.....	.....	.....
E	.....	.....	338	3,000	576	5,100	1,412	12,500	971	8,600	.....	.....	.....	.....
F	.....	.....	406	3,600	644	5,700	1,785	15,800	1,412	12,500	.....	.....	.....	.....
G	.....	.....	.....	.....	711	6,300	.....	.....	.....	.....	2,282	20,200	1,694	15,000
H	.....	.....	.....	.....	768	6,800	.....	.....	.....	.....	2,598	23,000	2,090	18,500
J	.....	.....	.....	.....	.....	.....	.....	.....	.....	.....	2,824	25,000	2,203	19,500
L	.....	.....	.....	.....	.....	.....	.....	.....	.....	.....	3,050	27,000	.....	.....
M	.....	.....	.....	.....	.....	.....	.....	.....	.....	.....	3,220	28,500	.....	.....
N	.....	.....	.....	.....	.....	.....	.....	.....	.....	.....	3,389	30,000	.....	.....

NOTE: For rayon cord tires, applicable energy values are 60 percent of those in table.
*J measurements are rounded down to the nearest whole number.

TABLE III.—ENDURANCE TEST SCHEDULE

Description	Load range	Test wheel speed (r/m)	Test load: Percent of maximum load rating			Total best revolutions (thousands)
			I—7 hours	II—16 hours	III—24 hours	
Speed restricted service:						
88 km/h (55 mph)						
80 km/h (50 mph)	All	125	66	84	101	352.0
	C, D	150	75	97	114	432.0
56 km/h (35 mph)	E, F, G, H, J, L	100	66	84	101	282.5
Motorcycle	All	75	66	84	101	211.0
All other	All	250	[1] 100	[2] 108	117	510.0
	A, B, C, D	250	75	[2] 97	114	
	E	200	70	88	106	546.0
	F	200	66	84	101	564.0
	G	175	66	84	101	493.5
	H, J, L, N	150	66	84	101	423.5

[1] 4 hr., for tire sizes subject to high speed requirements (S6.3).
[2] 6 hr., for tire sizes subject to high speed requirements (S6.3).

§571.120 Standard No. 120; Tire selection and rims for motor vehicles other than passenger cars.

S1. *Scope*. This standard specifies tire and rim selection requirements and rim marking requirements.

S2. *Purpose*. The purpose of this standard is to provide safe operational performance by ensuring that vehicles to which it applies are equipped with tires of adequate size and load rating and with rims of appropriate size and type designation.

S3. *Application*. This standard applies to multipurpose passenger vehicles, trucks, buses, trailers, and motorcycles, to rims for use on those vehicles, and to non-pneumatic spare tire assemblies for use on those vehicles.

S4. *Definitions*. All terms defined in the Act and the rules and standards issued under its authority are used as defined therein.

Rim base means the portion of a rim remaining after removal of all split or continuous rim flanges, side rings, and locking rings that can be detached from the rim.

Rim size designation means rim diameter and width.

Rim diameter means nominal diameter of the bead seat.

Rim width means nominal distance between rim flanges.

Rim type designation means the industry or manufacturer's designation for a rim by style or code.

Weather side means the surface area of the rim not covered by the inflated tire.

S5. *Requirements*.

S5.1 *Tire and rim selection*.

S5.1.1 Except as specified in S5.1.3, each vehicle equipped with pneumatic tires for highway service shall be equipped with tires that meet the requirements of §571.109, New pneumatic tires, or §571.119, New pneumatic tires for vehicles other than passenger cars, and rims that are listed by the manufacturer of the tires as suitable for use with those tires, in accordance with S4.4 of §571.109 or S5.1 of §571.119, as applicable, except that vehicles may be equipped with a non-pneumatic spare tire assembly that meets the requirements of §571.129, New non-pneumatic tires for passenger cars, and S8 of this standard. Vehicles equipped with such an assembly shall meet the requirements of S5.3.3, S7, and S9 of this standard.

S5.1.2 Except in the case of a vehicle which has a speed attainable in 3.2 kilometers of 80 kilometers per hour or less, the sum of the maximum load ratings of the tires fitted to an axle shall be not less than the gross axle weight rating (GAWR) of the axle system as specified on the vehicle's certification label required by 49 CFR part 567. Except in the case of a vehicle which has a speed attainable in 2 miles of 50 mph or less, the sum of the maximum load ratings of the tires fitted to an axle shall be not less than the gross axle weight rating (GAWR) of the axle system as specified on the vehicle's certification label required by 49 CFR part 567. If the certification label shows

more than one GAWR for the axle system, the sum shall be not less than the GAWR corresponding to the size designation of the tires fitted to the axle. If the size designation of the tires fitted to the axle does not appear on the certification label, the sum shall be not less than the lowest GAWR appearing on the label. When a tire subject to FMVSS No. 109 is installed on a multipurpose passenger vehicle, truck, bus, or trailer, the tire's load rating shall be reduced by dividing by 1.10 before calculating the sum (i.e., the sum of the load ratings of the tires on each axle, when the tires' load carrying capacity at the recommended tire cold inflation pressure is reduced by dividing by 1.10, must be appropriate for the GAWR).

S5.1.3 In place of tires that meet the requirements of Standard No. 119, a truck, bus, or trailer may at the request of a purchaser be equipped at the place of manufacture of the vehicle with retreaded or used tires owned or leased by the purchaser, if the sum of the maximum load ratings meets the requirements of S5.1.2. Used tires employed under this provision must have been originally manufactured to comply with Standard No. 119, as evidenced by the DOT symbol.

S5.2 *Rim marking*. Each rim or, at the option of the manufacturer in the case of a single-piece wheel, wheel disc shall be marked with the information listed in paragraphs (a) through (e) of this paragraph, in lettering not less than 3 millimeters high, impressed to a depth or, at the option of the manufacturer, embossed to a height of not less than 0.125 millimeters. The information listed in paragraphs (a) through (c) of this paragraph shall appear on the weather side. In the case of rims of multi piece construction, the information listed in paragraphs (a) through (e) of this paragraph shall appear on the rim base and the information listed in paragraphs (b) and (d) of this paragraph shall also appear on each other part of the rim.

(a) A designation which indicates the source of the rim's published nominal dimensions, as follows:

(1) ''T'' indicates The Tire and Rim Association.

(2) ''E'' indicates The European Tyre and Rim Technical Organisation

(3) ''J'' indicates Japan Automobile Tire Manufacturers' Association, Inc.

(4) ''D'' indicates Deutsche Industrie Norm.

(5) ''B'' indicates British Standards Institution.

(6) ''S'' indicates Scandinavian Tire and Rim Organization.

(7) ''A'' indicates The Tyre and Rim Association of Australia.

(8) ''N'' indicates an independent listing pursuant to S4.4.1(a) of Standard No. 109 or S5.1(a) of Standard No. 119.

(b) The rim size designation, and in case of multipiece rims, the rim type designation. For example: 20 x 5.50, or 20 x 5.5.

(c) The symbol DOT, constituting a certification by the manufacturer of the rim that the rim complies with all applicable motor vehicle safety standards.

(d) A designation that identifies the manufacturer of the rim by name, trademark, or symbol.

(e) The month, day and year or the month and year of manufacture, expressed either numerically or by use of a symbol, at the option of the manufacturer. For example:

''September 4, 1976'' may be expressed numerically as:

90476, 904, or 76
76 904

''September 1976'' may be expressed as:

976, 9, or 76
76 9

(1) Any manufacturer that elects to express the date of manufacture by means of a symbol shall notify NHTSA in writing of the full names and addresses of all manufacturers and brand name owners utilizing that symbol and the name and address of the trademark owner of that symbol, if any. The notification shall describe in narrative form and in detail how the month, day, and year or the month and year are depicted by the symbol. Such description shall include an actual size graphic depiction of the symbol, showing and/or explaining the interrelationship of the component parts of the symbol as they will appear on the rim or single piece wheel disc, including dimensional specifications, and where the symbol will

be located on the rim or single piece wheel disc. The notification shall be received by NHTSA at least 60 calendar days prior to first use of the symbol. The notification shall be mailed to the Office of Vehicle Safety Compliance, National Highway Traffic Safety Administration, 400 Seventh Street SW., Washington, DC 20590. All information provided to NHTSA under this paragraph will be placed in the public docket.

(2) Each manufacturer of wheels shall provide an explanation of its date of manufacture symbol to any person upon request.

S5.3 *Label information.* Each vehicle shall show the information specified in S5.3.1 and S5.3.2 and, in the case of a vehicle equipped with a non-pneumatic spare tire, the information specified in S5.3.3, in the English language, lettered in block capitals and numerals not less than 2.4 millimeters high and in the format set forth following this section. This information shall appear either—

(a) After each GAWR listed on the certification label required by §567.4 or §567.5 of this chapter; or, at the option of the manufacturer,

(b) On the tire information label affixed to the vehicle in the manner, location and form described in §567.4 (b) through (f) of this chapter, as appropriate for each GVWR–GAWR combination listed on the certification label.

S5.3.1 *Tires.* The size designation (not necessarily for the tires on the vehicle) and the recommended cold inflation pressure for those tires such that the sum of the load ratings of the tires on each axle (when the tires' load carrying capacity at the specified pressure is reduced by dividing by 1.10, in the case of a tire subject to FMVSS No. 109) is appropriate for the GAWR as calculated in accordance with S5.1.2.

S5.3.2. *Rims.* The size designation and, if applicable, the type designation of Rims (not necessarily those on the vehicle) appropriate for those tires.

TRUCK EXAMPLE—SUITABLE TIRE-RIM CHOICE

GVWR: 7,840 kilograms (17280 pounds)
GAWR: Front—2,850 kilograms (6,280 pounds) with 7.50–20(D) tires, 20 x 6.00 rims at 520 kPa (75 psi) cold single
GAWR: Rear—4990 kilograms (11,000 pounds) with 7.50–20(D) tires, 20 x 6.00 rims, at 450 kPa (65 psi) cold dual
GAWR: 13,280 kilograms (29,279 pounds)
GAWR: Front—4,826 kilograms (10,640 pounds) with 10.00–20(F) tires, 20 x 7.50 rims, at 620 kPa (90 psi) cold single
GAWR: Rear—8,454 kilograms (18,639 pounds) with 10.00–20(F) tires, 20 x 7.50 rims, at 550 kPa (80 psi) cold dual.

S5.3.3 The non-pneumatic tire identification code, with which that assembly is labeled pursuant to S4.3(a) of §571.129.

S6. *Load Limits for Non-Pneumatic Spare Tires.* The highest vehicle maximum load on the tire for the vehicle shall not be greater than the load rating for the non-pneumatic spare tire.

S7 *Labeling Requirements for Non-Pneumatic Spare Tires or Tire Assemblies.* Each non-pneumatic tire or, in the case of a non-pneumatic tire assembly in which the non-pneumatic tire is an integral part of the assembly, each non-pneumatic tire assembly shall include, in letters or numerals not less than 4 millimeters high, the information specified in paragraphs S7 (a) and (b). The information shall be permanently molded, stamped, or otherwise permanently marked into or onto the non-pneumatic tire or non-pneumatic tire assembly, or shall appear on a label that is permanently attached to the tire or tire assembly. If a label is used, it shall be subsurface printed, made of material that is resistant to fade, heat, moisture and abrasion, and attached in such a manner that it cannot be removed without destroying or defacing the label on the non-pneumatic tire or tire assembly. The information specified in paragraphs S7 (a) and (b) shall appear on both sides of the non-pneumatic tire or tire assembly, except, in the case of a non-pneumatic tire assembly which has a particular side that must always face outward when mounted on a vehicle, in which case the information specified in paragraphs S7 (a) and (b) shall only be required on the outward facing side. The information shall be positioned on the tire or tire assembly such that it is not placed on the tread or the outermost edge of the tire and is not obstructed by any portion of any non-pneumatic rim or wheel center member designated for

use with that tire in this standard or in Standard No. 129.

(a) FOR TEMPORARY USE ONLY; and

(b) MAXIMUM 80 KM/H (50 M.P.H.).

S8. *Requirements for Vehicles Equipped with Non-Pneumatic Spare Tire Assemblies*

S8.1 *Vehicle Placarding Requirements.* A placard, permanently affixed to the inside of the spare tire stowage area or equally accessible location adjacent to the non-pneumatic spare tire assembly, shall display the information set forth in S7 in block capitals and numerals not less than 6 millimeters high preceded by the words ''IMPORTANT—USE OF SPARE TIRE'' in letters not less than 9 millimeters high.

S8.2 *Supplementary Information.* The owner's manual of the vehicle shall contain, in writing in the English language and in not less than 10 point type, the following information under the heading ''IMPORTANT—USE OF SPARE TIRE'':

(a) A statement indicating the information related to appropriate use for the non-pneumatic spare tire including at a minimum the information set forth in S8 (a) and (b) and either the information set forth in S5.3.6 or a statement that the information set forth in S5.3.6 is located on the vehicle placard and on the non-pneumatic tire;

(b) An instruction to drive carefully when the non-pneumatic spare tire is in use, and to install the proper pneumatic tire and rim at the first reasonable opportunity; and

(c) A statement that operation of the vehicle is not recommended with more than one non-pneumatic spare tire in use at the same time.

S9 *Non-Pneumatic Rims and Wheel Center Members*

S9.1 *Non-Pneumatic Rim Requirements.* Each non-pneumatic rim that is part of a separable non-pneumatic spare tire assembly shall be constructed to the dimensions of a non-pneumatic rim that is listed pursuant to S4.4 of § 571.129 for use with the non-pneumatic tire, designated by its non-pneumatic tire identification code, with which the vehicle is equipped.

S9.2 *Wheel Center Member Requirements.* Each wheel center member that is part of a separable non-pneumatic spare tire assembly shall be constructed to the dimensions of a wheel center member that is listed pursuant to S4.4 of § 571.129 for use with the non-pneumatic tire, designated by its non-pneumatic tire identification code, with which the vehicle is equipped.

(Authority: Secs. 102, 119, and 202, Pub. L. 89–563, 80 Stat. 718 (15 U.S.C. 1392, 1407, and 1422); delegation of authority at 49 CFR 1.50)

[42 FR 7144, Feb. 7, 1977, as amended at 49 FR 20824, May 17, 1984; 54 FR 38386, Sept. 18, 1989; 55 FR 29589, July 20, 1990; 56 FR 19311, Apr. 26, 1991; 58 FR 13426, Mar. 11, 1993; 59 FR 25578, May 17, 1994; 60 FR 13644, Mar. 14, 1995; 61 FR 29495, June 11, 1996]

EFFECTIVE DATE NOTE: At 63 FR 28922, May 27, 1998, § 571.120 was amended by revising ''TRUCK EXAMPLE—SUITABLE TIRE-RIM CHOICE'' at the end of S5.3.2, and before S5.3.3, effective May 27, 2003. For the convenience of the user, the revised text follows:

§ 571.120 Standard No. 120; Tire selection and rims for motor vehicles other than passenger cars.

* * * * *

S5.3.2. Rims.

* * * * *

TRUCK EXAMPLE—SUITABLE TIRE–RIM CHOICE

GVWR: 7,840 KG (17,289 LB)

GAWR: FRONT—2,850 KG (6,280 LB) WITH 7.50–20(D) TIRES, 20 X 6.00 RIMS AT 520 KPA (75 PSI) COLD SINGLE

GAWR: REAR—4,990 KG (11,000 LB) WITH 7.50–20(D) TIRES, 20 X 6.00 RIMS, AT 450 KPA (65 PSI) COLD DUAL

GVWR: 13,280 KG (29,279 LB)

GAWR: FRONT—4,826 KG (10,640 LB) WITH 10.00–20(F) TIRES, 20 X 7.50 RIMS, AT 620 KPA (90 PSI) COLD SINGLE

GAWR: REAR—8,454 KG (18,639 LB) WITH 10.00–20(F) TIRES, 20 X 2.70 RIMS, AT 550 KPA (80 PSI) COLD DUAL

* * * * *

§ 571.121 Standard No. 121; Air brake systems.

S1. *Scope.* This standard establishes performance and equipment requirements for braking systems on vehicles equipped with air brake systems.

S2. *Purpose.* The purpose of this standard is to insure safe braking performance under normal and emergency conditions.

S3. *Application*. This standard applies to trucks, buses, and trailers equipped with air brake systems. However, it does not apply to:

(a) Any trailer that has a width of more than 102.36 inches with extendable equipment in the fully retracted position and is equipped with two short track axles in a line across the width of the trailer.

(b) Any vehicle equipped with an axle that has a gross axle weight rating (GAWR) of 29,000 pounds or more;

(c) Any truck or bus that has a speed attainable in 2 miles of not more than 33 mph;

(d) Any truck that has a speed attainable in 2 miles of not more than 45 mph, an unloaded vehicle weight that is not less than 95 percent of its gross vehicle weight rating (GVWR), and no capacity to carry occupants other than the driver and operating crew;

(e) Any trailer that has a GVWR of more than 120,000 pounds and whose body conforms to that described in the definition of heavy hauler trailer set forth in S4;

(f) Any trailer that has an unloaded vehicle weight which is not less than 95 percent of its GVWR; and

(g) Any load divider dolly.

S4. *Definitions*.

Agricultural commodity trailer means a trailer that is designed to transport bulk agricultural commodities in off-road harvesting sites and to a processing plant or storage location, as evidenced by skeletal construction that accommodates harvest containers, a maximum length of 28 feet, and an arrangement of air control lines and reservoirs that minimizes damage in field operations.

Air brake system means a system that uses air as a medium for transmitting pressure or force from the driver control to the service brake, including an air-over-hydraulic brake subsystem, but does not include a system that uses compressed air or vacuum only to assist the driver in applying muscular force to hydraulic or mechanical components.

Air-over-hydraulic brake subsystem means a subsystem of the air brake system that uses compressed air to transmit a force from the driver control to a hydraulic brake system to actuate the service brakes.

Antilock brake system or *ABS* means a portion of a service brake system that automatically controls the degree of rotational wheel slip during braking by:

(1) Sensing the rate of angular rotation of the wheels;

(2) Transmitting signals regarding the rate of wheel angular rotation to one or more controlling devices which interpret those signals and generate responsive controlling output signals; and

(3) Transmitting those controlling signals to one or more modulators which adjust brake actuating forces in response to those signals.

Auto transporter means a truck and a trailer designed for use in combination to transport motor vehicles, in that the towing vehicle is designed to carry cargo at a location other than the fifth wheel and to load this cargo only by means of the towed vehicle.

Common diaphragm means a single brake chamber diaphragm which is a component of the parking, emergency, and service brake systems.

Container chassis trailer means a semitrailer of skeleton construction limited to a bottom frame, one or more axles, specially built and fitted with locking devices for the transport of intermodal shipping containers, so that when the chassis and container are assembled, the units serve the same function as an over the road trailer.

Directly controlled wheel means a wheel for which the degree of rotational wheel slip is sensed, either at that wheel or on the axle shaft for that wheel and corresponding signals are transmitted to one or more modulators that adjust the brake actuating forces at that wheel. Each modulator may also adjust the brake actuating forces at other wheels that are on the same axle or in the same axle set in response to the same signal or signals.

Effective projected luminous lens area means that area of the projection on a plane perpendicular to the lamp axis of that portion of the light-emitting surface that directs light to the photometric test pattern, and does not include mounting hole bosses, reflex reflector area, beads or rims that may

glow or produce small areas of increased intensity as a result of uncontrolled light from small areas (½ degree radius around the test point).

Full-treadle brake application means a brake application in which the treadle valve pressure in any of the valve's output circuits reaches 85 pounds per square inch (psi) within 0.2 seconds after the application is initiated, or in which maximum treadle travel is achieved within 0.2 seconds after the application is initiated.

Heavy hauler trailer means a trailer which has one or more of the following characteristics, but which is not a container chassis trailer:

(1) Its brake lines are designed to adapt to separation or extension of the vehicle frame; or

(2) Its body consists only of a platform whose primary cargo-carrying surface is not more than 40 inches above the ground in an unloaded condition, except that it may include sides that are designed to be easily removable and a permanent ''front end structure'' as that term is used in § 393.106 of this title.

Independently controlled wheel means a directly controlled wheel for which the modulator does not adjust the brake actuating forces at any other wheel on the same axle.

Indirectly controlled wheel means a wheel at which the degree of rotational wheel slip is not sensed, but at which the modulator of an antilock braking system adjusts its brake actuating forces in response to signals from one or more sensed wheel(s).

Initial brake temperature means the average temperature of the service brakes on the hottest axle of the vehicle 0.2 mile before any brake application in the case of road tests, or 18 seconds before any brake application in the case of dynamometer testing.

Intermodal shipping container means a reusable, transportable enclosure that is especially designed with integral locking devices for securing the container to the trailer to facilitate the efficient and bulk shipping and transfer of goods by, or between various modes of transport, such as highway, rail, sea and air.

Load divider dolly means a trailer composed of a trailer chassis and one or more axles, with no solid bed, body, or container attached, and which is designed exclusively to support a portion of the load on a trailer or truck excluded from all the requirements of this standard.

Maximum drive-through speed means the highest possible constant speed at which the vehicle can be driven through 200 feet of a 500-foot radius curve arc without leaving the 12-foot lane.

Maximum treadle travel means the distance that the treadle moves from its position when no force is applied to its position when the treadle reaches a full stop.

Peak friction coefficient or *PFC* means the ratio of the maximum value of braking test wheel longitudinal force to the simultaneous vertical force occurring prior to wheel lockup, as the braking torque is progressively increased.

Pulpwood trailer means a trailer that is designed exclusively for harvesting logs or pulpwood and constructed with a skeletal frame with no means for attachment of a solid bed, body, or container, and with an arrangement of air control lines and reservoirs designed to minimize damage in off-road operations.

Tandem axle means a group or set of two or more axles placed in a close arrangement, one behind the other, with the centerlines of adjacent axles not more than 72 inches apart.

Straddle trailer means a trailer that is designed to transport bulk agricultural commodities from the harvesting location as evidenced by a framework that is driven over the cargo and lifting arms that suspend the cargo for transit.

Wheel lockup means 100 percent wheel slip.

S5. *Requirements*. Each vehicle shall meet the following requirements under the conditions specified in S6.

S5.1 *Required equipment for trucks and buses*. Each truck and bus shall have the following equipment:

S5.1.1 *Air compressor*. An air compressor of sufficient capacity to increase air pressure in the supply and service reservoirs from 85 psi to 100 psi

when the engine is operating at the vehicle manufacturer's maximum recommended r.p.m. within a time, in seconds, determined by the quotient (Actual reservoir capacity x 25) / Required reservoir capacity.

S5.1.1.1 *Air compressor cut-in pressure.* The air compressor governor cut-in pressure for each bus shall be 85 p.s.i. or greater. The air compressor governor cut-in pressure for each truck shall be 100 p.s.i. or greater.

S5.1.2 *Reservoirs.* One or more service reservoir systems, from which air is delivered to the brake chambers, and either an automatic condensate drain valve for each service reservoir or a supply reservoir between the service reservoir system and the source of air pressure.

S5.1.2.1 The combined volume of all service reservoirs and supply reservoirs shall be at least 12 times the combined volume of all service brake chambers. For each brake chamber type having a full stroke at least as great as the first number in Column 1 of Table V, but no more than the second number in Column 1 of Table V, the volume of each brake chamber for purposes of calculating the required combined service and supply reservoir volume shall be either that specified in Column 2 of Table V or the actual volume of the brake chamber at maximum travel of the brake piston or pushrod, whichever is lower. The volume of a brake chamber not listed in Table V is the volume of the brake chamber at maximum travel of the brake piston or pushrod. The reservoirs of the truck portion of an auto transporter need not meet this requirement for reservoir volume.

S5.1.2.2 Each reservoir shall be capable of withstanding an internal hydrostatic pressure of five times the compressor cutout pressure or 500 psi, whichever is greater, for 10 minutes.

S5.1.2.3 Each service reservoir system shall be protected against loss of air pressure due to failure or leakage in the system between the service reservoir and the source of air pressure, by check valves or equivalent devices whose proper functioning can be checked without disconnecting any air line or fitting.

S5.1.2.4 Each reservoir shall have a condensate drain valve that can be manually operated.

S5.1.3 *Towing vehicle protection system.* If the vehicle is intended to tow another vehicle equipped with air brakes, a system to protect the air pressure in the towing vehicle from the effects of a loss of air pressure in the towed vehicle.

S5.1.4 *Pressure gauge.* A pressure gauge in each service brake system, readily visible to a person seated in the normal driving position, that indicates the service reservoir system air pressure. The accuracy of the gauge shall be within plus or minus 7 percent of the compressor cut-out pressure.

S5.1.5 *Warning signal.* A signal, other than a pressure gauge, that gives a continuous warning to a person in the normal driving position when the ignition is in the ''on'' (''run'') position and the air pressure in the service reservoir system is below 60 psi. The signal shall be either visible within the driver's forward field of view, or both audible and visible.

S5.1.6 *Antilock brake system.*

S5.1.6.1(a) Each single-unit vehicle manufactured on or after March 1, 1998, shall be equipped with an antilock brake system that directly controls the wheels of at least one front axle and the wheels of at least one rear axle of the vehicle. Wheels on other axles of the vehicle may be indirectly controlled by the antilock brake system.

(b) Each truck tractor manufactured on or after March 1, 1997, shall be equipped with an antilock brake system that directly controls the wheels of at least one front axle and the wheels of at least one rear axle of the vehicle, with the wheels of at least one axle being independently controlled. Wheels on other axles of the vehicle may be indirectly controlled by the antilock brake system. A truck tractor shall have no more than three wheels controlled by one modulator.

S5.1.6.2 *Antilock malfunction signal and circuit.*

(a) Each truck tractor manufactured on or after March 1, 1997, and each single unit vehicle manufactured on or after March 1, 1998, shall be equipped with an indicator lamp, mounted in front of and in clear view of the driver,

which is activated whenever there is a malfunction that affects the generation or transmission of response or control signals in the vehicle's antilock brake system. The indicator lamp shall remain activated as long as such a malfunction exists, whenever the ignition (start) switch is in the ''on'' (''run'') position, whether or not the engine is running. Each message about the existence of such a malfunction shall be stored in the antilock brake system after the ignition switch is turned to the ''off'' position and automatically reactivated when the ignition switch is again turned to the ''on'' (''run'') position. The indicator lamp shall also be activated as a check of lamp function whenever the ignition is turned to the ''on'' (''run'') position. The indicator lamp shall be deactivated at the end of the check of lamp function unless there is a malfunction or a message about a malfunction that existed when the key switch was last turned to the ''off'' position.

(b) Each truck tractor manufactured on or after March 1, 2001, and each single unit vehicle manufactured on or after March 1, 2001, that is equipped to tow another air-braked vehicle, shall be equipped with an electrical circuit that is capable of transmitting a malfunction signal from the antilock brake system(s) on one or more towed vehicle(s) (e.g., trailer(s) and dolly(ies)) to the trailer ABS malfunction lamp in the cab of the towing vehicle, and shall have the means for connection of this electrical circuit to the towed vehicle. Each such truck tractor and single unit vehicle shall also be equipped with an indicator lamp, separate from the lamp required in S5.1.6.2(a), mounted in front of and in clear view of the driver, which is activated whenever the malfunction signal circuit described above receives a signal indicating an ABS malfunction on one or more towed vehicle(s). The indicator lamp shall remain activated as long as an ABS malfunction signal from one or more towed vehicle(s) is present, whenever the ignition (start) switch is in the ''on'' (''run'') position, whether or not the engine is running. The indicator lamp shall also be activated as a check of lamp function whenever the ignition is turned to the ''on'' (''run'') position. The indicator lamp shall be deactivated at the end of the check of lamp function unless a trailer ABS malfunction signal is present.

(c) [Reserved]

S5.1.6.3 *Antilock power circuit for towed vehicles.* Each truck tractor manufactured on or after March 1, 1997, and each single unit vehicle manufactured on or after March 1, 1998, that is equipped to tow another air-braked vehicle shall be equipped with one or more electrical circuits that provide continuous power to the antilock system on the towed vehicle or vehicles whenever the ignition (start) switch is in the ''on'' (''run'') position. Such a circuit shall be adequate to enable the antilock system on each towed vehicle to be fully operable.

S5.1.7 *Service brake stop lamp switch.* A switch that lights the stop lamps when the service brake control is statically depressed to a point that produces a pressure of 6 psi or less in the service brake chambers.

S5.1.8 *Brake distribution and automatic adjustment.* Each vehicle shall be equipped with a service brake system acting on all wheels.

(a) *Brake adjuster.* Wear of the service brakes shall be compensated for by means of a system of automatic adjustment. When inspected pursuant to S5.9, the adjustment of the service brakes shall be within the limits recommended by the vehicle manufacturer.

(b) *Brake indicator.* For each brake equipped with an external automatic adjustment mechanism and having an exposed pushrod, the condition of service brake under-adjustment shall be displayed by a brake adjustment indicator that is discernible when viewed with 20/40 vision from a location adjacent to or underneath the vehicle, when inspected pursuant to S5.9.

S5.2 *Required equipment for trailers.* Each trailer shall have the following equipment:

S5.2.1 *Reservoirs.* One or more reservoirs to which the air is delivered from the towing vehicle.

S5.2.1.1 The total volume of each service reservoir shall be at least eight times the combined volume of all service brake chambers serviced by that reservoir. For each brake chamber type

having a full stroke at least as great as the first number in Column 1 of Table V, but no more than the second number in column 1, the volume of each brake chamber for purposes of calculating the required total service reservoir volume shall be either the number specified in Column 2 of Table V or the actual volume of the brake chamber at maximum travel of the brake piston or pushrod, whichever is lower. The volume of a brake chamber not listed in Table V is the volume of the brake chamber at maximum travel of the brake piston or pushrod. The reservoirs on a heavy hauler trailer and the trailer portion of an auto transporter need not meet this requirement for reservoir volume.

S5.2.1.2 Each reservoir shall be capable of withstanding an internal hydrostatic pressure of 500 psi for 10 minutes.

S5.2.1.3 Each reservoir shall have a condensate drain valve that can be manually operated.

S5.2.1.4 Each service reservoir shall be protected against loss of air pressure due to failure or leakage in the system between the service reservoir and its source of air pressure by check valves or equivalent devices.

S5.2.2 *Brake distribution and automatic adjustment*. Each vehicle shall be equipped with a service brake system acting on all wheels.

(a) *Brake adjuster*. Wear of the service brakes shall be compensated for by means of a system of automatic adjustment. When inspected pursuant to S5.9, the adjustment of the service brakes shall be within the limits recommended by the vehicle manufacturer.

(b) *Brake indicator*. For each brake equipped with an external automatic adjustment mechanism and having an exposed pushrod, the condition of service brake under-adjustment shall be displayed by a brake adjustment indicator in a manner that is discernible when viewed with 20/40 vision from a location adjacent to or underneath the vehicle, when inspected pursuant to S5.9.

S5.2.3 *Antilock brake system*.

S5.2.3.1(a) Each semitrailer (including a trailer converter dolly) manufactured on or after March 1, 1998, shall be equipped with an antilock brake system that directly controls the wheels of at least one axle of the vehicle. Wheels on other axles of the vehicle may be indirectly controlled by the antilock brake system.

(b) Each full trailer manufactured on or after March 1, 1998, shall be equipped with an antilock brake system that directly controls the wheels of at least one front axle of the vehicle and at least one rear axle of the vehicle. Wheels on other axles of the vehicle may be indirectly controlled by the antilock brake system.

S5.2.3.2 *Antilock malfunction signal*. Each trailer (including a trailer converter dolly) manufactured on or after March 1, 2001, that is equipped with an antilock brake system shall be equipped with an electrical circuit that is capable of signaling a malfunction in the trailer's antilock brake system, and shall have the means for connection of this antilock brake system malfunction signal circuit to the towing vehicle. The electrical circuit need not be separate or dedicated exclusively to this malfunction signaling function. The signal shall be present whenever there is a malfunction that affects the generation or transmission of response or control signals in the trailer's antilock brake system. The signal shall remain present as long as the malfunction exists, whenever power is supplied to the antilock brake system. Each message about the existence of such a malfunction shall be stored in the antilock brake system whenever power is no longer supplied to the system, and the malfunction signal shall be automatically reactivated whenever power is again supplied to the trailer's antilock brake system. In addition, each trailer manufactured on or after March 1, 2001, that is designed to tow other air-brake equipped trailers shall be capable of transmitting a malfunction signal from the antilock brake systems of additional trailers it tows to the vehicle towing it.

S5.2.3.3 *Antilock malfunction indicator*.

(a) In addition to the requirements of S5.2.3.2, each trailer and trailer converter dolly manufactured on or after March 1, 1998, and before March 1, 2009, shall be equipped with an external antilock malfunction indicator lamp

that meets the requirements of S5.2.3.3 (b) through (d).

(b)(1) The lamp shall be designed to conform to the performance requirements of Society of Automotive Engineers (SAE) Recommended Practice J592 JUN92, or J592e, July 1972, *Clearance, Side Marker, and Identification Lamps*, for combination, clearance, and side marker lamps, which are marked with a ''PC'' or ''P2'' on the lens or housing, in accordance with SAE J759 Jan 95, *Lighting Identification Code*. SAE J592 June 92, SAE J592e July 1972, and SAE J759 January 1995, are incorporated by reference and thereby are made part of this standard. The Director of the Federal Register approved the material incorporated by reference in accordance with 5 U.S.C. 552(a) and 1 CFR part 51. Copies of the material may be inspected at NHTSA's Docket Section, 400 Seventh Street, SW., room 5109, Washington, DC, or at the Office of the Federal Register, 800 North Capitol Street, NW., Washington, DC.

(2) The color of the lamp shall be yellow.

(3) The letters ''ABS'' shall be permanently molded, stamped, or otherwise marked or labeled in letters not less than 10 mm (0.4 inches) high on the lamp lens or its housing to identify the function of the lamp. Alternatively, the letters ''ABS'' may be painted on the trailer body or dolly or a plaque with the letters ''ABS'' may be affixed to the trailer body or converter dolly; the letters ''ABS'' shall be not less than 25 mm (1 inch) high. A portion of one of the letters in the alternative identification shall be not more than 150 mm (5.9 inches) from the edge of the lamp lens.

(c) *Location requirements.* (1) Each trailer that is not a trailer converter dolly shall be equipped with a lamp mounted on a permanent structure on the left side of the trailer as viewed from the rear, no closer than 150 mm (5.9 inches), and no farther than 600 mm (23.6 inches) from the red rear side marker lamp, when measured between the closest edge of the effective projected luminous lens area of each lamp.

(2) Each trailer converter dolly shall be equipped with a lamp mounted on a permanent structure of the dolly so that the lamp is not less than 375 mm (14.8 inches) above the road surface when measured from the center of the lamp with the dolly at curb weight. When a person, standing 3 meters (9.8 feet) from the lamp, views the lamp from a perspective perpendicular to the vehicle's centerline, no portion of the lamp shall be obscured by any structure on the dolly.

(3) Each trailer that is not a trailer converter dolly and on which the malfunction indicator lamp cannot be placed within the location specified in S5.2.3.3(c)(1) shall be equipped with a lamp mounted on a permanent structure on the left side of the trailer as viewed from the rear, near the red rear side marker lamp or on the front face of the left rear fender of a trailer equipped with fenders.

(d) The lamp shall be illuminated whenever power is supplied to the antilock brake system and there is a malfunction that affects the generation or transmission of response or control signals in the trailer's antilock brake system. The lamp shall remain illuminated as long as such a malfunction exists and power is supplied to the antilock brake system. Each message about the existence of such a malfunction shall be stored in the antilock brake system whenever power is no longer supplied to the system. The lamp shall be automatically reactivated when power is again supplied to the trailer's antilock brake system. The lamp shall also be activated as a check of lamp function whenever power is first supplied to the antilock brake system and the vehicle is stationary. The lamp shall be deactivated at the end of the check of lamp function, unless there is a malfunction or a message about a malfunction that existed when power was last supplied to the antilock brake system.

S5.3 *Service brakes—road tests.* The service brake system on each truck tractor manufactured before March 1, 1997, shall, under the conditions of S6, meet the requirements of S5.3.3 and S5.3.4, when tested without adjustments other than those specified in this standard. The service brake system on each truck tractor manufactured on or after March 1, 1997, shall, under the conditions of S6, meet the requirements of S5.3.1, S5.3.3, S5.3.4, and

S5.3.6, when tested without adjustments other than those specified in this standard. The service brake system on each bus and truck (other than a truck tractor) manufactured before March 1, 1998, shall, under the conditions of S6, meet the requirements of S5.3.3, and S5.3.4, when tested without adjustments other than those specified in this standard. The service brake system on each bus and truck (other than a truck tractor) manufactured on or after March 1, 1998, shall, under the conditions of S6, meet the requirements of S5.3.1, S5.3.3, and S5.3.4 when tested without adjustments other than those specified in this standard. The service brake system on each trailer shall, under the conditions of S6, meet the requirements of S5.3.3, S5.3.4, and S5.3.5 when tested without adjustments other than those specified in this standard. However, a heavy hauler trailer and the truck and trailer portions of an auto transporter need not meet the requirements of S5.3.

S5.3.1 *Stopping distance—trucks and buses*. When stopped six times for each combination of vehicle type, weight, and speed specified in S5.3.1.1, in the sequence specified in Table I, each truck tractor manufactured on or after March 1, 1997, and each single unit vehicle manufactured on or after March 1, 1998, shall stop at least once in not more than the distance specified in Table II, measured from the point at which movement of the service brake control begins, without any part of the vehicle leaving the roadway, and with wheel lockup permitted only as follows:

(a) At vehicle speeds above 20 mph, any wheel on a nonsteerable axle other than the two rearmost nonliftable, nonsteerable axles may lock up, for any duration. The wheels on the two rearmost nonliftable, nonsteerable axles may lock up according to S5.3.1(b).

(b) At vehicle speeds above 20 mph, one wheel on any axle or two wheels on any tandem may lock up for any duration.

(c) At vehicle speeds above 20 mph, any wheel not permitted to lock in S5.3.1 (a) or (b) may lock up repeatedly, with each lockup occurring for a duration of one second or less.

(d) At vehicle speeds of 20 mph or less, any wheel may lock up for any duration.

S5.3.1.1 Stop the vehicle from 60 mph on a surface with a peak friction coefficient of 0.9 with the vehicle loaded as follows:

(a) Loaded to its GVWR so that the load on each axle, measured at the tire-ground interface, is most nearly proportional to the axles' respective GAWRs, without exceeding the GAWR of any axle.

(b) In the truck tractor only configuration plus up to 500 lbs. or, at the manufacturer's option, at its unloaded weight plus up to 500 lbs. (including driver and instrumentation) and plus not more than an additional 1,000 lbs. for a roll bar structure on the vehicle, and

(c) At its unloaded vehicle weight (except for truck tractors) plus up to 500 lbs. (including driver and instrumentation) or, at the manufacturer's option, at its unloaded weight plus up to 500 lbs. (including driver and instrumentation) plus not more than an additional 1,000 lbs. for a roll bar structure on the vehicle. If the speed attainable in two miles is less than 60 mph, the vehicle shall stop from a speed in Table II that is four to eight mph less than the speed attainable in two miles.

S5.3.2 [Reserved]

S5.3.3 *Brake actuation time*. Each service brake system shall meet the requirements of S5.3.3.1 (a) and (b).

S5.3.3.1(a) With an initial service reservoir system air pressure of 100 psi, the air pressure in each brake chamber shall, when measured from the first movement of the service brake control, reach 60 psi in not more than 0.45 second in the case of trucks and buses, 0.50 second in the case of trailers, other than trailer converter dollies, designed to tow another vehicle equipped with air brakes, 0.55 second in the case of trailer converter dollies, and 0.60 second in the case of trailers other than trailers designed to tow another vehicle equipped with air brakes. A vehicle designed to tow another vehicle equipped with air brakes shall meet the above actuation time requirement with a 50-cubic-inch test reservoir connected to the control line output coupling. A trailer, including a trailer converter

dolly, shall meet the above actuation time requirement with its control line input coupling connected to the test rig shown in Figure 1.

(b) For a vehicle that is designed to tow another vehicle equipped with air brakes, the pressure in the 50-cubic-inch test reservoir referred to in S5.3.3.1(a) shall, when measured from the first movement of the service brake control, reach 60 psi not later than the time the fastest brake chamber on the vehicle reaches 60 psi or, at the option of the manufacturer, in not more than 0.35 second in the case of trucks and buses, 0.55 second in the case of trailer converter dollies, and 0.50 second in the case of trailers other than trailer converter dollies.

S5.3.4 *Brake release time.* Each service brake system shall meet the requirements of S5.3.4.1 (a) and (b).

S5.3.4.1(a) With an initial service brake chamber air pressure of 95 psi, the air pressure in each brake chamber shall, when measured from the first movement of the service brake control, fall to 5 psi in not more than 0.55 second in the case of trucks and buses; 1.00 second in the case of trailers, other than trailer converter dollies, designed to tow another vehicle equipped with air brakes; 1.10 seconds in the case of trailer converter dollies; and 1.20 seconds in the case of trailers other than trailers designed to tow another vehicle equipped with air brakes. A vehicle designated to tow another vehicle equipped with air brakes shall meet the above release time requirement with a 50-cubic-inch test reservoir connected to the control line output coupling. A trailer, including a trailer converter dolly, shall meet the above release time requirement with its control line input coupling connected to the test rig shown in Figure 1.

(b) For vehicles designed to tow another vehicle equipped with air brakes, the pressure in the 50-cubic-inch test reservoir referred to in S5.3.4.1(a) shall, when measured from the first movement of the service brake control, fall to 5 psi in not more than 0.75 seconds in the case of trucks and buses, 1.10 seconds in the case of trailer converter dollies, and 1.00 seconds in the case of trailers other than trailer converter dollies.

S5.3.5 *Control signal pressure differential—converter dollies and trailers designed to tow another vehicle equipped with air brakes.*

(a) For a trailer designed to tow another vehicle equipped with air brakes, the pressure differential between the control line input coupling and a 50-cubic-inch test reservoir attached to the control line output coupling shall not exceed the values specified in S5.3.5(a) (1), (2), and (3) under the conditions specified in S5.3.5(b) (1) through (4):

(1) 1 psi at all input pressures equal to or greater than 5 psi, but not greater than 20 psi;

(2) 2 psi at all input pressures equal to or greater than 20 psi but not greater than 40 psi; and

(3) Not more than a 5-percent differential at any input pressure equal to or greater than 40 psi.

(b) The requirements in S5.3.5(a) shall be met—

(1) When the pressure at the input coupling is steady, increasing or decreasing;

(2) When air is applied to or released from the control line input coupling using the trailer test rig shown in Figure 1;

(3) With a fixed orifice consisting of a 0.0180 inch diameter hole (no. 77 drill bit) in a 0.032 inch thick disc installed in the control line between the trailer test rig coupling and the vehicle's control line input coupling; and

(4) Operating the trailer test rig in the same manner and under the same conditions as it is operated during testing to measure brake actuation and release times, as specified in S5.3.3 and S5.3.4, except for the installation of the orifice in the control line to restrict airflow rate.

S5.3.6 *Stability and control during braking—truck tractors.* When stopped four consecutive times for each combination of weight, speed, and road conditions specified in S5.3.6.1 and S5.3.6.2, each truck tractor manufactured on or after March 1, 1997, shall stop at least three times within the 12-foot lane, without any part of the vehicle leaving the roadway.

S5.3.6.1 Using a full-treadle brake application for the duration of the stop, stop the vehicle from 30 mph or 75

percent of the maximum drive-through speed, whichever is less, on a 500-foot radius curved roadway with a wet level surface having a peak friction coefficient of 0.5 when measured on a straight or curved section of the curved roadway using an American Society for Testing and Materials (ASTM) E1136 standard reference tire, in accordance with ASTM Method E1337–90, at a speed of 40 mph, with water delivery.

S5.3.6.2 Stop the vehicle with the vehicle

(a) Loaded to its GVWR, and

(b) At its unloaded weight plus up to 500 pounds (including driver and instrumentation), or at the manufacturer's option, at its unloaded weight plus up to 500 pounds (including driver and instrumentation) and plus not more than an additional 1000 pounds for a roll bar structure on the vehicle.

S5.4 *Service brake system—dynamometer tests*. When tested without prior road testing, under the conditions of S6.2, each brake assembly shall meet the requirements of S5.4.1, S5.4.2, and S5.4.3 when tested in sequence and without adjustments other than those specified in the standard. For purposes of the requirements of S5.4.2 and S5.4.3, an average deceleration rate is the change in velocity divided by the deceleration time measured from the onset of deceleration.

S5.4.1 *Brake retardation force*. The sum of the retardation forces exerted by the brakes on each vehicle designed to be towed by another vehicle equipped with air brakes shall be such that the quotient sum of the brake retardation forces / sum of GAWR's relative to brake chamber air pressure, and shall have values not less than those shown in Column 1 of Table III. Retardation force shall be determined as follows:

S5.4.1.1 After burnishing the brake pursuant to S6.2.6, retain the brake assembly on the inertia dynamometer. With an initial brake temperature between 125 °F. and 200 °F., conduct a stop from 50 m.p.h., maintaining brake chamber air pressure at a constant 20 psi. Measure the average torque exerted by the brake from the time the specified air pressure is reached until the brake stops and divide by the static loaded tire radius specified by the tire manufacturer to determine the retardation force. Repeat the procedure six times, increasing the brake chamber air pressure by 10 psi each time. After each stop, rotate the brake drum or disc until the temperature of the brake falls to between 125 °F. and 200 °F.

S5.4.2 *Brake power*. When mounted on an inertia dynamometer, each brake shall be capable of making 10 consecutive decelerations at an average rate of 9 f.p.s.p.s. from 50 m.p.h. to 15 m.p.h., at equal intervals of 72 seconds, and shall be capable of decelerating to a stop from 20 m.p.h. at an average deceleration rate of 14 f.p.s.p.s. 1 minute after the 10th deceleration. The series of decelerations shall be conducted as follows:

S5.4.2.1 With an initial brake temperature between 150 °F. and 200 °F. for the first brake application, and the drum or disc rotating at a speed equivalent to 50 m.p.h., apply the brake and decelerate at an average deceleration rate of 9 f.p.s.p.s. to 15 m.p.h. Upon reaching 15 m.p.h., accelerate to 50 m.p.h. and apply the brake for a second time 72 seconds after the start of the first application. Repeat the cycle until 10 decelerations have been made. The service line air pressure shall not exceed 100 psi during any deceleration.

S5.4.2.2 One minute after the end of the last deceleration required by S5.4.2.1 and with the drum or disc rotating at a speed of 20 m.p.h., decelerate to a stop at an average deceleration rate of 14 f.p.s.p.s.

S5.4.3 *Brake recovery*. Except as provided in S5.4.3(a) and (b), starting two minutes after completing the tests required by S5.4.2, a vehicle's brake shall be capable of making 20 consecutive stops from 30 mph at an average deceleration rate of 12 f.p.s.p.s., at equal intervals of one minute measured from the start of each brake application. The service line air pressure needed to attain a rate of 12 f.p.s.p.s. shall be not more than 85 lb/in^2, and not less than 20lb/in^2 for a brake not subject to the control of an antilock system, or 12 lb/in^2 for a brake subject to the control of an antilock system.

(a) Notwithstanding S5.4.3, neither front axle brake of a truck-tractor is subject to the requirements set forth in S5.4.3.

(b) Notwithstanding S5.4.3, neither front axle brake of a bus or a truck other than a truck-tractor is subject to the requirement set forth in S5.4.3 prohibiting the service line air pressure from being less than 20 lb/in^2 for a brake not subject to the control of an antilock system or 12 lb/in^2 for a brake subject to the control of an antilock system.

S5.5 *Antilock system.*

S5.5.1 *Antilock system malfunction.* On a truck tractor manufactured on or after March 1, 1997, that is equipped with an antilock brake system and a single unit vehicle manufactured on or after March 1, 1998, that is equipped with an antilock brake system, a malfunction that affects the generation or transmission of response or control signals of any part of the antilock system shall not increase the actuation and release times of the service brakes.

S5.5.2 *Antilock system power—trailers.* On a trailer (including a trailer converter dolly) manufactured on or after March 1, 1998, that is equipped with an antilock system that requires electrical power for operation, the power shall be obtained from the towing vehicle through one or more electrical circuits which provide continuous power whenever the powered vehicle's ignition (start) switch is in the ''on'' (''run'') position. The antilock system shall automatically receive power from the stoplamp circuit, if the primary circuit or circuits are not functioning. Each trailer (including a trailer converter dolly) manufactured on or after March 1, 1998, that is equipped to tow another air-braked vehicle shall be equipped with one or more circuits which provide continuous power to the antilock system on the vehicle(s) it tows. Such circuits shall be adequate to enable the antilock system on each towed vehicle to be fully operable.

S5.6 *Parking brakes.*

(a) Except as provided in S5.6(b) and S5.6(c), each vehicle other than a trailer converter dolly shall have a parking brake system that under the conditions of S6.1 meets the requirements of:

(1) S5.6.1 or S5.6.2, at the manufacturer's option, and

(2) S5.6.3, S5.6.4, S5.6.5, and S5.6.6.

(b) At the option of the manufacturer, for vehicles equipped with brake systems which incorporate a common diaphragm, the performance requirements specified in S5.6(a) which must be met with any single leakage-type failure in a common diaphragm may instead be met with the level of leakage-type failure determined in S5.6.7. The election of this option does not affect the performance requirements specified in S5.6(a) which apply with single leakage-type failures other than failures in a common diaphragm.

(c) At the option of the manufacturer, the trailer portion of any agricultural commodity trailer, heavy hauler trailer, or pulpwood trailer may meet the requirements of § 393.43 of this title instead of the requirements of S5.6(a).

S5.6.1 *Static retardation force.* With all other brakes made inoperative, during a static drawbar pull in a forward or rearward direction, the static retardation force produced by the application of the parking brakes shall be:

(a) In the case of a vehicle other than a truck-tractor that is equipped with more than two axles, such that the quotient static retardation force/GAWR is not less than 0.28 for any axle other than a steerable front axle; and

(b) In the case of a truck-tractor that is equipped with more than two axles, such that the quotient static retardation force/GVWR is not less than 0.14.

S5.6.2 *Grade holding.* With all parking brakes applied, the vehicle shall remain stationary facing uphill and facing downhill on a smooth, dry portland cement concrete roadway with a 20-percent grade, both

(a) When loaded to its GVWR, and

(b) At its unloaded vehicle weight plus 1500 pounds (including driver and instrumentation and roll bar).

S5.6.3 *Application and holding.* Each parking brake system shall meet the requirements of S5.6.3.1 through S5.6.3.4.

S5.6.3.1 The parking brake system shall be capable of achieving the minimum performance specified either in S5.6.1 or S5.6.2 with any single leakage-type failure, in any other brake system, of a part designed to contain compressed air or brake fluid (excluding failure of a component of a brake chamber housing but including failure of any brake chamber diaphragm that

is part of any other brake system including a diaphragm which is common to the parking brake system and any other brake system), when the pressures in the vehicle's parking brake chambers are at the levels determined in S5.6.3.4.

S5.6.3.2 A mechanical means shall be provided that, after a parking brake application is made with the pressures in the vehicle's parking brake chambers at the levels determined in S5.6.3.4, and all air and fluid pressures in the vehicle's braking systems are then bled down to zero, and without using electrical power, holds the parking brake application with sufficient parking retardation force to meet the minimum performance specified in S5.6.3.1 and in either S5.6.1 or S5.6.2.

S5.6.3.3 For trucks and buses, with an initial reservoir system pressure of 100 psi and, if designed to tow a vehicle equipped with air brakes, with a 50 cubic inch test reservoir connected to the supply line coupling, no later than three seconds from the time of actuation of the parking brake control, the mechanical means referred to in S5.6.3.2 shall be actuated. For trailers, with the supply line initially pressurized to 100 psi using the supply line portion of the trailer test rig (Figure 1) and, if designed to tow a vehicle equipped with air brakes, with a 50 cubic inch test reservoir connected to the rear supply line coupling, no later than three seconds from the time venting to the atmosphere of the front supply line coupling is initiated, the mechanical means referred to in S5.6.3.2 shall be actuated. This requirement shall be met for trucks, buses and trailers both with and without any single leakage-type failure, in any other brake system, of a part designed to contain compressed air or brake fluid (consistent with the parenthetical phrase specified in S5.6.3.1).

S5.6.3.4 The parking brake chamber pressures for S5.6.3.1 and S5.6.3.2 are determined as follows. For trucks and buses, with an initial reservoir system pressure of 100 psi and, if designed to tow a vehicle equipped with air brakes, with a 50 cubic inch test reservoir connected to the supply line coupling, any single leakage type failure, in any other brake system, of a part designed to contain compressed air or brake fluid (consistent with the parenthetical phrase specified in S5.6.3.1), is introduced in the brake system. The parking brake control is actuated and the pressures in the vehicle's parking brake chambers are measured three seconds after that actuation is initiated. For trailers, with the supply line initially pressurized to 100 psi using the supply line portion of the trailer test rig (Figure 1) and, if designed to tow a vehicle equipped with air brakes, with a 50 cubic inch test reservoir connected to the rear supply line coupling, any single leakage type failure, in any other brake system, of a part designed to contain compressed air or brake fluid (consistent with the parenthetical phrase specified in S5.6.3.1), is introduced in the brake system. The front supply line coupling is vented to the atmosphere and the pressures in the vehicle's parking brake chambers are measured three seconds after that venting is initiated.

S5.6.4 *Parking brake control—trucks and buses.* The parking brake control shall be separate from the service brake control. It shall be operable by a person seated in the normal driving position. The control shall be identified in a manner that specifies the method of control operation. The parking brake control shall control the parking brakes of the vehicle and of any air braked vehicle that it is designed to tow.

S5.6.5 *Release Performance.* Each parking brake system shall meet the requirements specified in S5.6.5.1 through S5.6.5.4.

S5.6.5.1 For trucks and buses, with initial conditions as specified in S5.6.5.2, at all times after an application actuation of the parking brake control, and with any subsequent level of pressure, or combination of levels of pressure, in the reservoirs of any of the vehicle's brake systems, no reduction in parking brake retardation force shall result from a release actuation of the parking brake control unless the parking brakes are capable, after such release, of being reapplied at a level meeting the minimum performance specified either in S5.6.1 or S5.6.2. This requirement shall be met both with and without the engine on, and with

and without single leakage-type failure, in any other brake system, of a part designed to contain compressed air or brake fluid (consistent with the parenthetical phrase specified in S5.6.3.1).

S5.6.5.2 The initial conditions for S5.6.5.1 are as follows: The reservoir system pressure is 100 psi. If the vehicle is designed to tow a vehicle equipped with air brakes, a 50 cubic inch test reservoir is connected to the supply line coupling.

S5.6.5.3 For trailers, with initial conditions as specified in S5.6.5.4, at all times after actuation of the parking brakes by venting the front supply line coupling to the atmosphere, and with any subsequent level of pressure, or combination of levels of pressure, in the reservoirs of any of the vehicle's brake systems, the parking brakes shall not be releasable by repressurizing the supply line using the supply line portion of the trailer test rig (Figure 1) to any pressure above 70 psi, unless the parking brakes are capable, after such release, of reapplication by subsequent venting of the front supply line coupling to the atmosphere, at a level meeting the minimum performance specified either in S5.6.1 or S5.6.2. This requirement shall be met both with and without any single leakage-type failure, in any other brake system, of a part designed to contain compressed air or brake fluid (consistent with the parenthetical phrase specified in S5.6.3.1).

S5.6.5.4 The initial conditions for S5.6.5.3 are as follows: The reservoir system and supply line are pressurized to 100 psi, using the supply line portion of the trailer test rig (Figure 1). If the vehicle is designed to tow a vehicle equipped with air brakes, a 50 cubic inch test reservoir is connected to the rear supply line coupling.

S5.6.6 *Accumulation of actuation energy*. Each parking brake system shall meet the requirements specified in S5.6.6.1 through S5.6.6.6.

S5.6.6.1 For trucks and buses, with initial conditions as specified in S5.6.6.2, the parking brake system shall be capable of meeting the minimum performance specified either in S5.6.1 or S5.6.2, with any single leakage-type failure, in any other brake system, of a part designed to contain compressed air or brake fluid (consistent with the parenthetical phrase specified in S5.6.3.1) at the conclusion of the test sequence specified in S5.6.6.3.

S5.6.6.2 The initial conditions for S5.6.6.1 are as follows: The engine is on. The reservoir system pressure is 100 psi. If the vehicle is designed to tow a vehicle equipped with air brakes, a 50 cubic inch test reservoir is connected to the supply line coupling.

S5.6.6.3 The test sequence for S5.6.6.1 is as follows: The engine is turned off. Any single leakage type failure, in any other brake system, of a part designed to contain compressed air or brake fluid (consistent with the parenthetical phrase specified in S5.6.3.1), is then introduced in the brake system. An application actuation of the parking brake control is then made. Thirty seconds after such actuation, a release actuation of the parking brake control is made. Thirty seconds after the release actuation, a final application actuation of the parking brake control is made.

S5.6.6.4 For trailers, with initial conditions as specified in S5.6.6.5, the parking brake system shall be capable of meeting the minimum performance specified either in S5.6.1 or S5.6.2, with any single leakage-type failure, in any other brake system, of a part designed to contain compressed air or brake fluid (consistent with the parenthetical phrase specified in S5.6.3.1), at the conclusion of the test sequence specified in S5.6.6.6.

S5.6.6.5 The initial conditions for S5.6.6.4 are as follows: The reservoir system and supply line are pressurized to 100 psi, using the supply line portion of the trailer test rig (Figure 1). If the vehicle is designed to tow a vehicle equipped with air brakes, a 50 cubic inch test reservoir is connected to the rear supply line coupling.

S5.6.6.6 The test sequence for S5.6.6.4 is as follows. Any single leakage type failure, in any other brake system, of a part designed to contain compressed air or brake fluid (consistent with the parenthetical phrase specified in S5.6.3.1), is introduced in the brake system. The front supply line coupling is vented to the atmosphere. Thirty seconds after the

initiation of such venting, the supply line is repressurized with the trailer test rig (Figure 1). Thirty seconds after the initiation of such repressurizing of the supply line, the front supply line is vented to the atmosphere. This procedure is conducted either by connection and disconnection of the supply line coupling or by use of a valve installed in the supply line portion of the trailer test rig near the supply line coupling.

S5.6.7 *Maximum level of common diaphragm leakage-type failure/ Equivalent level of leakage from the air chamber containing that diaphragm.* In the case of vehicles for which the option in S5.6(b) has been elected, determine the maximum level of common diaphragm leakage-type failure (or equivalent level of leakage from the air chamber containing that diaphragm) according to the procedures set forth in S5.6.7.1 through S5.6.7.2.3.

S5.6.7.1 *Trucks and buses.*

S5.6.7.1.1 According to the following procedure, determine the threshold level of common diaphragm leakage-type failure (or equivalent level of leakage from the air chamber containing that diaphragm) at which the vehicle's parking brakes become unreleasable. With an initial reservoir system pressure of 100 psi, the engine turned off, no application of any of the vehicle's brakes, and, if the vehicle is designed to tow a vehicle equipped with air brakes, a 50 cubic inch test reservoir connected to the supply line coupling, introduce a leakage-type failure of the common diaphragm (or equivalent leakage from the air chamber containing that diaphragm). Apply the parking brakes by making an application actuation of the parking brake control. Reduce the pressures in all of the vehicle's reservoirs to zero, turn on the engine and allow it to idle, and allow the pressures in the vehicle's reservoirs to rise until they stabilize or until the compressor shut-off point is reached. At that time, make a release actuation of the parking brake control, and determine whether all of the mechanical means referred to in S5.6.3.2 continue to be actuated and hold the parking brake applications with sufficient parking retardation force to meet the minimum performance specified in either S5.6.1 or S5.6.2. Repeat this procedure with progressively decreasing or increasing levels (whichever is applicable) of leakage-type diaphragm failures or equivalent leakages, to determine the minimum level of common diaphragm leakage-type failure (or equivalent level of leakage from the air chamber containing that diaphragm) at which all of the mechanical means referred to in S5.6.3.2 continue to be actuated and hold the parking brake applications with sufficient parking retardation forces to meet the minimum performance specified in either S5.6.1 or S5.6.2.

S5.6.7.1.2 At the level of common diaphragm leakage-type failure (or equivalent level of leakage from the air chamber containing that diaphragm) determined in S5.6.7.1.1, and using the following procedure, determine the threshold maximum reservoir rate (in psi per minute). With an initial reservoir system pressure of 100 psi, the engine turned off, no application of any of the vehicle's brakes and, if the vehicle is designed to tow a vehicle equipped with air brakes, a 50 cubic inch test reservoir connected to the supply line coupling, make an application actuation of the parking brake control. Determine the maximum reservoir leakage rate (in psi per minute), which is the maximum rate of decrease in air pressure of any of the vehicle's reservoirs that results after that parking brake application.

S5.6.7.1.3 Using the following procedure, introduce a leakage-type failure of the common diaphragm (or equivalent leakage from the air chamber containing that diaphragm) that results in a maximum reservoir leakage rate that is three times the threshold maximum reservoir leakage rate determined in S5.6.7.1.2. With an initial reservoir system pressure of 100 psi, the engine turned off, no application of any of the vehicle's brakes and, if the vehicle is designed to tow a vehicle equipped with air brakes, a 50 cubic inch test reservoir connected to the supply line coupling, make an application actuation of the parking brake control. Determine the maximum reservoir leakage rate (in psi per minute), which is the maximum rate of decrease in air pressure of any of the vehicle's reservoirs that results after that parking

brake application. The level of common diaphragm leakage-type failure (or equivalent level of leakage from the air chamber containing that diaphragm) associated with this reservoir leakage rate is the level that is to be used under the option set forth in S5.6(b).

S5.6.7.2 *Trailers.*

S5.6.7.2.1 According to the following procedure, determine the threshold level of common diaphragm leakage-type failure (or equivalent level of leakage from the air chamber containing that diaphragm) at which the vehicle's parking brakes become unreleasable. With an initial reservoir system and supply line pressure of 100 psi, no application of any of the vehicle's brakes, and, if the vehicle is designed to tow a vehicle equipped with air brakes, a 50 cubic inch test reservoir connected to the supply line coupling, introduce a leakage-type failure of the common diaphragm (or equivalent leakage from the air chamber containing that diaphragm). Make a parking brake application by venting the front supply line coupling to the atmosphere, and reduce the pressures in all of the vehicle's reservoirs to zero. Pressurize the supply line by connecting the trailer's front supply line coupling to the supply line portion of the trailer test rig (Figure 1) with the regulator of the trailer test rig set at 100 psi, and determine whether all of the mechanical means referred to in S5.6.3.2 continue to be actuated and hold the parking brake applications with sufficient parking retardation forces to meet the minimum performance specified in either S5.6.1 or S5.6.2. Repeat this procedure with progressively decreasing or increasing levels (whichever is applicable) of leakage-type diaphragm failures or equivalent leakages, to determine the minimum level of common diaphragm leakage-type failure (or equivalent level of leakage from the air chamber containing that diaphragm) at which all of the mechanical means referred to in S5.6.3.2 continue to be actuated and hold the parking brake applications with sufficient parking retardation forces to meet the minimum performance specified in either S5.6.1 or S5.6.2.

S5.6.7.2.2 At the level of common diaphragm leakage-type failure (or equivalent level of leakage from the air chamber containing that diaphragm) determined in S5.6.7.2.1, and using the following procedure, determine the threshold maximum reservoir leakage rate (in psi per minute). With an initial reservoir system and supply line pressure of 100 psi, no application of any of the vehicle's brakes and, if the vehicle is designed to tow a vehicle equipped with air brakes, a 50 cubic inch test reservoir connected to the rear supply line coupling, make a parking brake application by venting the front supply line coupling to the atmosphere. Determine the maximum reservoir leakage rate (in psi per minute), which is the maximum rate of decrease in air pressure of any of the vehicle's reservoirs that results after that parking brake application.

S5.6.7.2.3 Using the following procedure, a leakage-type failure of the common diaphragm (or equivalent leakage from the air chamber containing that diaphragm) that results in a maximum reservoir leakage rate that is three times the threshold maximum reservoir leakage rate determined in S5.6.7.2.2. With an initial reservoir system and supply line pressure of 100 psi, no application of any of the vehicle's brakes and, if the vehicle is designed to tow a vehicle equipped with air brakes, a 50 cubic inch test reservoir connected to the rear supply line coupling, make a parking brake application by venting the front supply line coupling to the atmosphere. Determine the maximum reservoir leakage rate (in psi per minute), which is the maximum rate of decrease in air pressure of any of the vehicle's reservoirs that results after that parking brake application. The level of common diaphragm leakage-type failure (or equivalent level of leakage from the air chamber containing that diaphragm) associated with this reservoir leakage rate is the level that is to be used under the option set forth in S5.6(b).

S5.7 *Emergency brake system for trucks and buses.* Each vehicle shall be equipped with an emergency brake system which, under the conditions of S6.1, conforms to the requirements of S5.7.1 through S5.7.3. However, the

truck portion of an auto transporter need not meet the road test requirements of S5.7.1 and S5.7.3.

S5.7.1 *Emergency brake system performance.* When stopped six times for each combination of weight and speed specified in S5.3.1.1, except for a loaded truck tractor with an unbraked control trailer, on a road surface having a PFC of 0.9, with a single failure in the service brake system of a part designed to contain compressed air or brake fluid (except failure of a common valve, manifold, brake fluid housing, or brake chamber housing), the vehicle shall stop at least once in not more than the distance specified in Column 5 of Table II, measured from the point at which movement of the service brake control begins, except that a truck-tractor tested at its unloaded vehicle weight plus up to 1500 pounds shall stop at least once in not more than the distance specified in Column 6 of Table II. The stop shall be made without any part of the vehicle leaving the roadway, and with unlimited wheel lockup permitted at any speed.

S5.7.2 *Emergency brake system operation.* The emergency brake system shall be applied and released, and be capable of modulation, by means of the service brake control.

S5.7.3 *Towing vehicle emergency brake requirements.* In addition to meeting the other requirements of S5.7, a vehicle designed to tow another vehicle equipped with air brakes shall—

(a) In the case of a truck-tractor in the unloaded condition and a single unit truck which is capable of towing an airbrake equipped vehicle and is loaded to GVWR, be capable of meeting the requirements of S5.7.1 by operation of the service brake control only, with the trailer air supply line and air control line from the towing vehicle vented to the atmosphere in accordance with S6.1.14;

(b) Be capable of modulating the air in the supply or control line to the trailer by means of the service brake control with a single failure in the towing vehicle service brake system as specified in S5.7.1.

(c) [Reserved]

S5.8 *Emergency brakes for trailers.* Each trailer shall meet the requirements of S5.8.1 through S5.8.3.

S5.8.1 *Emergency braking capability.* Each trailer other than a trailer converter dolly shall have a parking brake system that conforms to S5.6 and that applies with the force specified in S5.6.1 or S5.6.2 when the air pressure in the supply line is at atmospheric pressure. A trailer converter dolly shall have, at the manufacturer's option—

(a) A parking brake system that conforms to S5.6 and that applies with the force specified in S5.6.1 or S5.6.2 when the air pressure in the supply line is at atmospheric pressure, or

(b) An emergency system that automatically applies the service brakes when the service reservoir is at any pressure above 20 lb/in^2 and the supply line is at atmospheric pressure. However, any agricultural commodity trailer, heavy hauler trailer, or pulpwood trailer shall meet the requirements of S5.8.1 or, at the option of the manufacturer, the requirements of §393.43 of this title.

S5.8.2 *Supply line pressure retention.* Any single leakage type failure in the service brake system (except for a failure of the supply line, a valve directly connected to the supply line or a component of a brake chamber housing) shall not result in the pressure in the supply line falling below 70 psi, measured at the forward trailer supply coupling. A trailer shall meet the above supply line pressure retention requirement with its brake system connected to the trailer test rig shown in Figure 1, with the reservoirs of the trailer and test rig initially pressurized to 100 psi and the regulator of the trailer test rig set at 100 psi; except that a trailer equipped with an air-applied, mechanically-held parking brake system and not designed to tow a vehicle equipped with air brakes, at the manufacturer's option, may meet the requirements of S5.8.4 rather than those of S5.8.2 and S5.8.3.

S5.8.3 *Automatic application of parking brakes.* With an initial reservoir system pressure of 100 psi and initial supply line pressure of 100 psi, and if designed to tow a vehicle equipped with air brakes, with a 50 cubic inch test reservoir connected to the rear supply line coupling, and with any subsequent single leakage type failure in any other brake system, of a part designed to

contain compressed air or brake fluid (consistent with the parenthetical phrase specified in S5.6.3.1), whenever the air pressure in the supply line is 70 psi or higher, the parking brakes shall not provide any brake retardation as a result of complete or partial automatic application of the parking brakes.

S5.8.4 *Automatic application of air-applied, mechanically held parking brakes.* With its brake system connected to the supply line portion of the trailer test rig (Figure 1) and the regulator of the trailer test rig set at 100 psi, and with any single leakage type failure in the service brake system (except for a failure of the supply line, a valve directly connected to the supply line or a component of a brake chamber, but including failure of any common diaphragm), the parking brakes shall not provide any brake retardation as a result of complete or partial automatic application of the parking brakes.

S5.9 *Final inspection.* Inspect the service brake system for the condition of adjustment and for the brake indicator display in accordance with S5.1.8 and S5.2.2.

S6. *Conditions.* The requirements of S5 shall be met by a vehicle when it is tested according to the conditions set in this S6, without replacing any brake system part or making any adjustments to the brake system except as specified. Unless otherwise specified, where a range of conditions is specified, the vehicle must be capable of meeting the requirements at all points within the range. On vehicles equipped with automatic brake adjusters, the automatic brake adjusters must remain activated at all times. Compliance of vehicles manufactured in two or more stages may, at the option of the final-stage manufacturer, be demonstrated to comply with this standard by adherence to the instructions of the incomplete vehicle manufacturer provided with the vehicle in accordance with § 568.4(a)(7)(ii) and § 568.5 of title 49 of the Code of Federal Regulations.

S6.1 *Road test conditions.*

S6.1.1 Except as otherwise specified, the vehicle is loaded to its GVWR, distributed proportionally to its GAWRs. During the burnish procedure specified in S6.1.8, truck tractors shall be loaded to their GVWR, by coupling them to an unbraked flatbed semitrailer, which semitrailer shall be loaded so that the weight of the tractor-trailer combination equals the GVWR of the truck tractor. The load on the unbraked flatbed semitrailer shall be located so that the truck tractor's wheels do not lock during burnish.

S6.1.2 The inflation pressure is as specified by the vehicle manufacturer for the GVWR.

S6.1.3 Unless otherwise specified, the transmission selector control is in neutral or the clutch is disengaged during all decelerations and during static parking brake tests.

S6.1.4 All vehicle openings (doors, windows, hood, trunk, cargo doors, etc.) are in a closed position except as required for instrumentation purposes.

S6.1.5 The ambient temperature is between 32 °F. and 100 °F.

S6.1.6 The wind velocity is zero.

S6.1.7 Unless otherwise specified, stopping tests are conducted on a 12-foot wide level, straight roadway having a peak friction coefficient of 0.9. For road tests in S5.3, the vehicle is aligned in the center of the roadway at the beginning of a stop. Peak friction coefficient is measured using an ASTM E1136 standard reference test tire in accordance with ASTM method E1337–90, at a speed of 40 mph, without water delivery for the surface with PFC of 0.9, and with water delivery for the surface with PFC of 0.5.

S6.1.8 For vehicles with parking brake systems not utilizing the service brake friction elements, burnish the friction elements of such systems prior to the parking brake test according to the manufacturer's recommendations. For vehicles with parking brake systems utilizing the service brake friction elements, burnish the brakes as follows: With the transmission in the highest gear appropriate for a speed of 40 mph, make 500 snubs between 40 mph and 20 mph at a deceleration rate of 10 f.p.s.p.s., or at the vehicle's maximum deceleration rate if less than 10 f.p.s.p.s. Except where an adjustment is specified, after each brake application accelerate to 40 mph and maintain that speed until making the next brake application at a point 1 mile from the initial point of the previous brake application. If the vehicle cannot attain a

speed of 40 mph in 1 mile, continue to accelerate until the vehicle reaches 40 mph or until the vehicle has traveled 1.5 miles from the initial point of the previous brake application, whichever occurs first. Any automatic pressure limiting valve is in use to limit pressure as designed. The brakes may be adjusted up to three times during the burnish procedure, at intervals specified by the vehicle manufacturer, and may be adjusted at the conclusion of the burnishing, in accordance with the vehicle manufacturer's recommendation.

S6.1.9 Static parking brake tests for a semitrailer are conducted with the front-end supported by an unbraked dolly. The weight of the dolly is included as part of the trailer load.

S6.1.10 In a test other than a static parking test, a truck tractor is tested at its GVWR by coupling it to an unbraked flatbed semi-trailer (hereafter, control trailer) as specified in S6.1.10.2 to S6.1.10.4.

S6.1.10.1 [Reserved]

S6.1.10.2 The center of gravity height of the ballast on the loaded control trailer shall be less than 24 inches above the top of the tractor's fifth wheel.

S6.1.10.3 The control trailer has a single axle with a GAWR of 18,000 pounds and a length, measured from the transverse centerline of the axle to the centerline of the kingpin, of 258 ± 6 inches.

S6.1.10.4 The control trailer is loaded so that its axle is loaded at 4,500 pounds and the tractor is loaded to its GVWR, loaded above the kingpin only, with the tractor's fifth wheel adjusted so that the load on each axle measured at the tire-ground interface is most nearly proportional to the axles' respective GAWRs, without exceeding the GAWR of the tractor's axle or axles or control trailer's axle.

S6.1.11 *Special drive conditions.* A vehicle equipped with an interlocking axle system or a front wheel drive system that is engaged and disengaged by the driver is tested with the system disengaged.

S6.1.12 *Liftable axles.* A vehicle with a liftable axle is tested at GVWR with the liftable axle down and at unloaded vehicle weight with the liftable axle up.

S6.1.13 *Trailer test rig.*

The trailer test rig shown in Figure 1 is calibrated in accordance with the calibration curves shown in Figure 3. For the requirements of S5.3.3.1 and S5.3.4.1, the pressure in the trailer test rig reservoir is initially set at 100 psi for actuation tests and 95 psi for release tests.

S6.1.14 In testing the emergency braking system of towing vehicles under S5.7.3(a), the hose(s) is vented to the atmosphere at any time not less than 1 second and not more than 1 minute before the emergency stop begins, while the vehicle is moving at the speed from which the stop is to be made and any manual control for the towing vehicle protection system is in the position to supply air and brake control signals to the vehicle being towed. No brake application is made from the time the line(s) is vented until the emergency stop begins and no manual operation of the parking brake system or towing vehicle protection system occurs from the time the line(s) is vented until the stop is completed.

S6.1.15 *Initial brake temperature.* Unless otherwise specified, the initial brake temperature is not less than 150° F and not more than 200° F.

S6.1.16 *Thermocouples.*

The brake temperature is measured by plug-type thermocouples installed in the approximate center of the facing length and width of the most heavily loaded shoe or disc pad, one per brake, as shown in Figure 2. A second thermocouple may be installed at the beginning of the test sequence if the lining wear is expected to reach a point causing the first thermocouple to contact the rubbing surface of a drum or rotor. The second thermocouple shall be installed at a depth of .080 inch and located within 1 inch circumferentially of the thermocouple installed at .040 inch depth. For centergrooved shoes or pads, thermocouples are installed within one-eighth of an inch to one-quarter of an inch of the groove and as close to the center as possible.

S6.2 *Dynamometer test conditions.*

S6.2.1 The dynamometer inertia for each wheel is equivalent to the load on the wheel with the axle loaded to its

GAWR. For a vehicle having additional GAWRs specified for operation at reduced speeds, the GAWR used is that specified for a speed of 50 mph, or, at the option of the manufacturer, any speed greater than 50 mph.

S6.2.2 The ambient temperature is between 75° F. and 100° F.

S6.2.3 Air at ambient temperature is directed uniformly and continuously over the brake drum or disc at a velocity of 2,200 feet per minute.

S6.2.4 The temperature of each brake is measured by a single plug-type thermocouple installed in the center of the lining surface of the most heavily loaded shoe or pad as shown in Figure 2. The thermocouple is outside any center groove.

S6.2.5 The rate of brake drum or disc rotation on a dynamometer corresponding to the rate of rotation on a vehicle at a given speed is calculated by assuming a tire radius equal to the static loaded radius specified by the tire manufacturer.

S6.2.6 Brakes are burnished before testing as follows: place the brake assembly on an inertia dynamometer and adjust the brake as recommended by the vehicle manufacturer. Make 200 stops from 40 mph at a deceleration of 10 f.p.s.p.s., with an initial brake temperature on each stop of not less than 315° F and not more than 385° F. Make 200 additional stops from 40 mph at a deceleration of 10 f.p.s.p.s. with an initial brake temperature on each stop of not less than 450° F and not more than 550° F. The brakes may be adjusted up to three times during the burnish procedure, at intervals specified by the vehicle manufacturer, and may be adjusted at the conclusion of the burnishing, in accordance with the vehicle manufacturer's recommendation.

S6.2.7 The brake temperature is increased to a specified level by conducting one or more stops from 40 m.p.h. at a deceleration of 10 f.p.s.p.s. The brake temperature is decreased to a specified level by rotating the drum or disc at a constant 30 m.p.h.

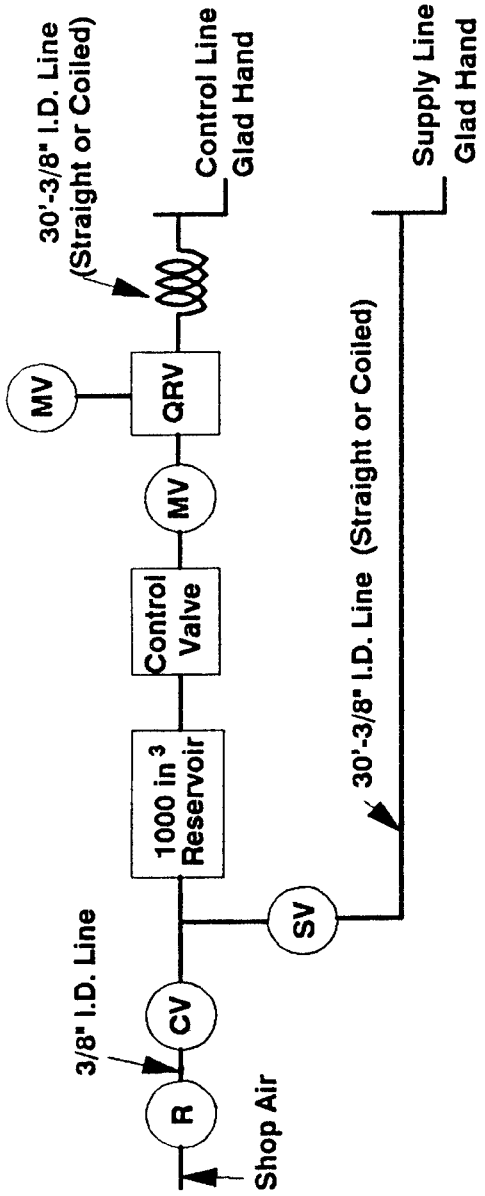

SV - Shut-off Valve

R - Regulator (set at 100 psi for service brake actuation tests; 95 psi for service brake release tests; 100 psi for parking brake tests in S5.6.3.3, S5.6.3.4, S5.6.5.4, and S5.6.6.5, and for the supply line pressure retention test in S5.8.2; and any pressure above 70 psi for parking brake test in S5.6.5.3.)

CV - Check Valve

MV - Metering Valve (Variable or Fixed)

QRV - Quick Release Valve

Figure 1. Trailer Test Rig.

FIGURE 2
THERMOCOUPLE INSTALLATION

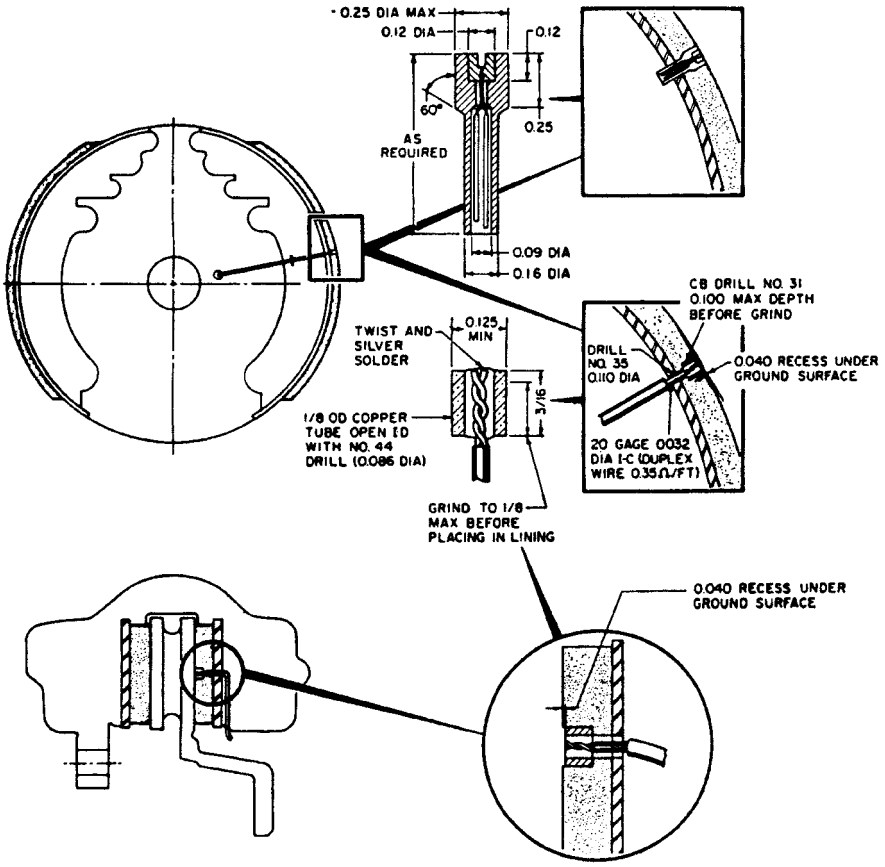

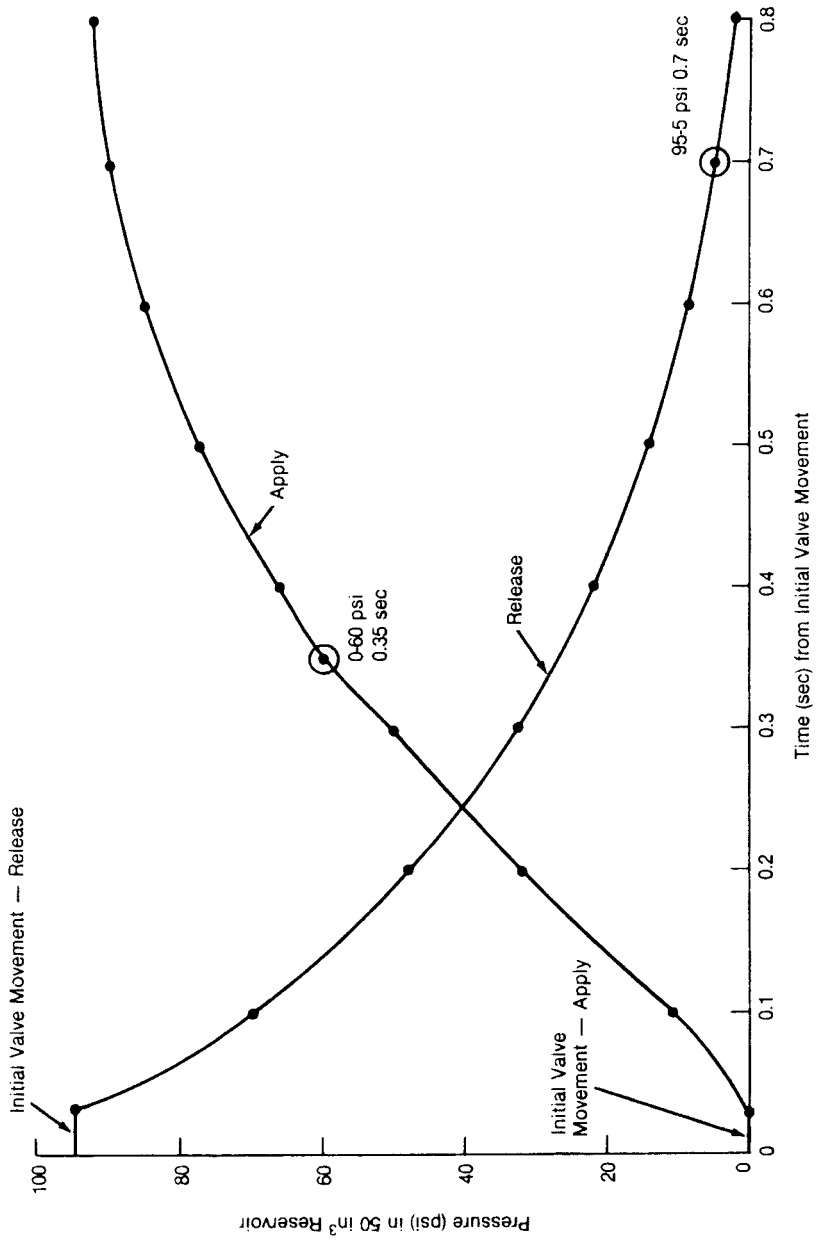

Figure 3. Pressure vs. Time for 50 in³ Test Reservoir.

TABLE I—STOPPING SEQUENCE

1. Burnish.
2. Stops on a peak friction coefficient surface of 0.5:

(a) With the vehicle at gross vehicle weight rating (GVWR), stop the vehicle from 30 mph using the service brake, for a truck tractor with a loaded unbraked control trailer.

(b) With the vehicle at unloaded weight plus up to 1500 lbs., stop the vehicle from 30 mph using the service brake, for a truck tractor.

3. Manual adjustment of the service brakes allowed for truck tractors, within the limits recommended by the vehicle manufacturer.

4. Other stops with vehicle at GVWR:

(a) 60 mph service brake stops on a peak friction coefficient surface of 0.9, for a truck tractor with a loaded unbraked control trailer, or for a single-unit vehicle.

(b) 60 mph emergency brake stops on a peak friction coefficient of 0.9, for a single-unit vehicle. Truck tractors are not required to be tested in the loaded condition.

5. Parking brake test with the vehicle loaded to GVWR.

6. Manual adjustment of the service brakes allowed for truck tractors and single-unit vehicles, within the limits recommended by the vehicle manufacturer.

7. Other stops with the vehicle at unloaded weight plus up to 1500 lbs.:

(a) 60 mph service brake stops on a peak friction coefficient surface of 0.9, for a truck tractor or for a single-unit vehicle.

(b) 60 mph emergency brake stops on a peak friction coefficient of 0.9, for a truck tractor or for a single-unit vehicle.

8. Parking brake test with the vehicle at unloaded weight plus up to 1500 lbs.

9. Final inspection of service brake system for condition of adjustment.

TABLE II—STOPPING DISTANCE IN FEET

Vehicle speed in miles per hour	Service brake				Emergency brake	
	PFC 0.9	PFC 0.9	PFC 0.9	PFC 0.9	PFC 0.9	PFC 0.9
	(1)	(2)	(3)	(4)	(5)	(6)
20	32	35	38	40	83	85
25	49	54	59	62	123	131
30	70	78	84	89	170	186
35	96	106	114	121	225	250
40	125	138	149	158	288	325
45	158	175	189	200	358	409
50	195	216	233	247	435	504
55	236	261	281	299	520	608
60	280	310	335	355	613	720

Note: (1) Loaded and unloaded buses; (2) Loaded single unit trucks; (3) Unloaded truck tractors and single unit trucks; (4) Loaded truck tractors tested with an unbraked control trailer; (5) All vehicles except truck tractors; (6) Unloaded truck tractors.

TABLE III.—BRAKE RETARDATION FORCE

Column 1 brake retardation force/GAWR	Column 2 brake chamber pressure, PSI
0.05	20
0.12	30
0.18	40
0.25	50
0.31	60
0.37	70
0.41	80

TABLE IV [RESERVED]

TABLE V.—BRAKE CHAMBER RATED VOLUMES

Brake Chamber type (nominal area of piston or diaphragm in square inches)	Column 1 full stroke (inches)	Column 2 rated volume (cubic inches)
Type 9	1.75/2.10	25
Type 12	1.75/2.10	30
Type 14	2.25/2.70	40
Type 16	2.25/2.70	46
Type 18	2.25/2.70	50
Type 20	2.25/2.70	54
Type 24	2.50/3.20	67
Type 30	2.50/3.20	89
Type 36	3.00/3.60	135

[61 FR 27290, May 31, 1996, as amended at 61 FR 49695, Sept. 23, 1996; 61 FR 60636, Nov. 29, 1996; 63 FR 7727, Feb. 17, 1998; 66 FR 64158, Dec. 12, 2001; 67 FR 36820, May 28, 2002]

§571.122 Standard No. 122; Motorcycle brake systems.

S1. *Scope*. This standard specifies performance requirements for motorcycle brake systems.

S2. *Purpose*. The purpose of the standard is to insure safe motorcycle braking performance under normal and emergency conditions.

S3. *Application*. This standard applies to motorcycles.

S4. *Definitions*.

Braking interval means the distance measured from the start of one brake application to the start of the next brake application.

Initial brake temperature means the temperature of the hottest service brake of the vehicle 0.2 mile before any brake application.

Skid number means the frictional resistance of a pavement measured in accordance with American Society for Testing and Materials (ASTM) Method E–274–70 (as revised July, 1974) at 40 mph, omitting water delivery as specified in paragraphs 7.1 and 7.2 of that method.

Stopping distance means the distance traveled by a vehicle from the start of the brake application to the point where the vehicle stops.

Split service brake system means a brake system consisting of two or more subsystems actuated by a single control designed so that a leakage-type failure of a pressure component in a single subsystem (except structural failure of a housing that is common to all subsystems) shall not impair the operation of the other subsystem(s).

S5. *Requirements*. Each motorcycle shall meet the following requirements under the conditions specified in S6, when tested according to the procedures and in the sequence specified in S7. Corresponding test procedures of S7 are indicated in parentheses. If a motorcycle is incapable of attaining a specified speed, its service brakes shall be capable of stopping the vehicle from the multiple of 5 m.p.h. that is 4 m.p.h. to 8 m.p.h. less than the speed attainable in 1 mile, within stopping distances that do not exceed the stopping distances specified in Table 1.

S5.1 *Required equipment—split service brake system*. Each motorcycle shall have either a split service brake system or two independently actuated service brake systems.

S5.1.1 *Mechanical service brake system*. Failure of any component in a mechanical service brake system shall not result in a loss of braking ability in the other service brake system on the vehicle.

S5.1.2 *Hydraulic service brake system*. A leakage failure in a hydraulic service brake system shall not result in a loss of braking ability in the other service brake system on the vehicle. Each motorcycle equipped with a hydraulic brake system shall have the equipment specified in S5.1.2.1 and S5.1.2.2.

S5.1.2.1 *Master cylinder reservoirs*. Each master cylinder shall have a separate reservoir for each brake circuit, with each reservoir filler opening having its own cover, seal, and cover retention device. Each reservoir shall have a minimum capacity equivalent to one and one-half times the total fluid displacement resulting when all the wheel cylinders or caliper pistons serviced by the reservoir move from a new lining, fully retracted position to a fully worn, fully applied position. Where adjustment is a factor, the worst condition of adjustment shall be used for this measurement.

S5.1.2.2 *Reservoir labeling*. Each motorcycle shall have a brake fluid warning statement that reads as follows, in letters at least three thirty-seconds of an inch high:

Warning: Clean filler cap before removing. Use only _____ fluid from a sealed container. (Inserting the recommended type of brake fluid as specified in 49 CFR 571.116, e.g., DOT 3.)

The lettering shall be:—

(a) Permanently affixed, engraved, or embossed;

(b) Located so as to be visible by direct view, either on or within 4 inches of the brake-fluid reservoir filler plug or cap; and

(c) Of a color that contrasts with its background, if it is not engraved or embossed.

S5.1.3 *Split service brake system*. In addition to the equipment required by S5.1.2 each motorcycle equipped with a split service brake system shall have a failure indicator lamp as specified in S5.1.3.1.

S5.1.3.1 *Failure indicator lamp*.

(a) One or more electrically operated service brake system failure indicator lamps that is mounted in front of and in clear view of the driver, and that is activated—

(1) In the event of pressure failure in any part of the service brake system, other than a structural failure of either a brake master cylinder body in a split integral body type master cylinder system or a service brake system failure indicator body, before or upon application of not more than 20 pounds of pedal force upon the service brake.

(2) Without the application of pedal force, when the level of brake fluid in a master cylinder reservoir drops to less than the recommended safe level specified by the manufacturer or to less than one-half the fluid reservoir capacity, whichever is the greater.

(b) All failure indicator lamps shall be activated when the ignition switch is turned from the ''off'' to the ''on'' or to the ''start'' position.

(c) Except for the momentary activation required by S5.1.3.1(b), each indicator lamp, once activated, shall remain activated as long as the condition exists, whenever the ignition switch is in the ''on'' position. An indicator lamp activated when the ignition is turned to the ''start'' position shall be deactivated upon return of the switch to the ''on'' position unless a failure exists in the service brake system.

(d) Each indicator lamp shall have a red lens with the legend ''Brake Failure'' on or adjacent to it in letters not less than three thirty-seconds of an inch high that shall be legible to the driver in daylight when lighted.

S5.1.4 *Parking brake.* Each three-wheeled motorcycle shall be equipped with a parking brake of a friction type with a solely mechanical means to retain engagement.

S5.1.5 *Other requirements.* The brake system shall be installed so that the lining thickness of drum brake shoes may be visually inspected, either directly or by use of a mirror without removing the drums, and so that disc brake friction lining thickness may be visually inspected without removing the pads.

S5.2 *Service brake system—first (preburnish) effectiveness.*

S5.2.1 *Service brake system.* The service brakes shall be capable of stopping the motorcycle from 30 m.p.h. and 60 m.p.h. within stopping distances which do not exceed the stopping distances specified in Column I of Table I (S7.3.1).

S5.2.2 *Partial service brake system.* Each independently actuated service brake system on each motorcycle shall be capable of stopping the motorcycle from 30 m.p.h. and 60 m.p.h. within stopping distances which do not exceed the stopping distances specified in Column II of Table I (S7.3.2).

S5.3 *Service brake system—second effectiveness.* The service brakes shall be capable of stopping the motorcycle from 30 m.p.h., 60 m.p.h., 80 m.p.h., and the multiple of 5 m.p.h. that is 4 m.p.h. to 8 m.p.h. less than the speed attainable in 1 mile if this speed is 95 m.p.h. or greater, within stopping distances that do not exceed the stopping distances specified in Column III of Table I (S7.5).

S5.4 *Service brake system—fade and recovery.* These requirements do not apply to a motor-driven cycle whose speed attainable in 1 mile is 30 m.p.h. or less.

S5.4.1 *Baseline check—minimum and maximum pedal forces.* The pedal and lever forces used in establishing the fade baseline check average shall be within the limits specified in S6.10 (S7.6.1).

S5.4.2 *Fade.* Each motorcycle shall be capable of making 10 fade stops from 60 m.p.h. at not less than 15 f.p.s.p.s. for each stop (S7.6.2).

S5.4.3 *Fade recovery.* Each motorcycle shall be capable of making five recovery stops with a pedal force that does not exceed 400 Newtons (90 pounds), and a hand lever force that does not exceed 245 Newtons (55 pounds) for any of the first four recovery stops and that for the fifth recovery stop, is within, plus 89 Newtons (20 pounds) and minus 44 Newtons (10 pounds) of the fade test baseline check average force (S7.6.3), but not less than 0 Newtons (0 pounds).

S5.5 *Service brake system—final effectiveness.* These requirements do not apply to a motor-driven cycle whose speed attainable in 1 mile is 30 mph or less.

S5.5.1 *Service brake system.* The service brakes shall be capable of stopping the motorcycle in a manner that complies with S5.3 (S7.8.1).

S5.5.2 *Hydraulic service brake system—partial failure.* In the event of a pressure component leakage failure, other than a structural failure of either a brake master cylinder body in a split integral body type master cylinder system or a service brake system failure indicator body, the remaining portion of the service brake system shall continue to operate and shall be capable of stopping the motorcycle from 30 m.p.h. and 60 m.p.h. within stopping distances that do not exceed the stopping distances specified in Column IV of Table I (S7.8.2).

S5.6 *Parking brake system.* The parking brake system shall be capable of holding the motorcycle stationary (to the limits of traction of the braked wheels), for 5 minutes, in both forward and reverse directions, on a 30 percent grade, with an applied force of not more than 90 pounds for a foot-operated system and 55 pounds for a hand-operated system (S7.9).

S5.7 *Service brake system—water recovery.*

S5.7.1 *Baseline check.* The pedal and lever forces used in establishing the water recovery baseline check average shall be within the limits specified in S6.10 (S7.10.1).

S5.7.2 *Water recovery test.* Each motorcycle shall be capable of making five recovery stops with a pedal force that does not exceed 400 Newtons (90 pounds), and hand lever force that does not exceed 245 Newtons (55 pounds), for any of the first four recovery stops, and that for the fifth recovery stop, is within, plus 89 Newtons (20 pounds) and minus 44 Newtons (10 pounds) of the water recovery baseline check average force (S7.10.2), but not less than 0 Newtons (0 pounds).

S5.8 *Service brake system design durability.* Each motorcycle shall be capable of completing all braking requirements of S5 without detachment of brake linings from the shoes or pad, detachment or fracture of any brake system components, or leakage of fluid or lubricant at the wheel cylinder, and master cylinder reservoir cover, seal, or retention device (S7.11).

S6 *Test conditions.* The requirements of S5 shall be met under the following conditions. Where a range of conditions is specified, the motorcycle shall be capable of meeting the requirements at all points within the range.

S6.1 *Vehicle weight.* Motorcycle weight is unloaded vehicle weight plus 200 pounds (including driver and instrumentation), with the added weight distributed in the saddle or carrier if so equipped.

S6.2 *Tire inflation pressure.* Tire inflation pressure is the pressure recommended by the manufacturer for the vehicle weight specified in paragraph S6.1.

S6.3 *Transmission.* Unless otherwise specified, all stops are made with the clutch disengaged.

S6.4 *Engine.* Engine idle speed and ignition timing settings are according to the manufacturer's recommendations. If the vehicle is equipped with an adjustable engine speed governor, it is adjusted according to the manufacturer's recommendation.

S6.5 *Ambient temperature.* The ambient temperature is between 32 °F. and 100 °F.

S6.6 *Wind velocity.* The wind velocity is zero.

S6.7 *Road surface.* Road tests are conducted on level roadway having a skid number of 81. The roadway is 8 feet wide for two-wheeled motorcycles, and overall vehicle width plus 5 feet for three-wheeled motorcycles. The parking brake test surface is clean, dry, smooth portland cement concrete.

S6.8 *Vehicle position.* The motorcycle is aligned in the center of the roadway at the start of each brake application. Stops are made without any part of the motorcycle leaving the roadway and without lockup of any wheel.

S6.9 *Thermocouples.* The brake temperature is measured by plug-type thermocouples installed in the approximate center of the facing length and width of the most heavily loaded shoe or disc pad, one per brake, as shown in Figure 1.

S6.10 *Brake actuation forces.* Except for the requirements of the fifth recovery stop in S5.4.3 and S5.7.2 (S7.6.3 and S7.10.2), the hand lever force is not less than 10 Newtons (2.3 pounds) and not more than 245 Newtons (55 pounds) and

the foot pedal force is not less than 25 Newtons (5.6 pounds) and not more than 400 Newtons (90 pounds). The point of initial application of the lever forces is 1.2 inches from the end of the brake lever grip. The direction of the force is perpendicular to the handle grip on the plane along which the brake lever rotates, and the point of application of the pedal force is the center of the foot contact pad of the brake pedal. The direction of the force is perpendicular to the foot contact pad on the plane along which the brake pedal rotates, as shown in Figure 2.

S7. *Test procedures and sequence.* Each motorcycle shall be capable of meeting all the requirements of this standard when tested according to the procedures and in the sequence set forth below without replacing any brake system part, or making any adjustments to the brake system other than as permitted in S7.4. A motorcycle shall be deemed to comply with S5.2, S5.3 and S5.5 if at least one of the stops specified in S7.3, S7.5 and S7.8 is made within the stopping distances specified in Table I.

S7.1 *Braking warming.* If the initial brake temperature for the first stop in a test procedure (other than S7.10) has not been reached, heat the brakes to the initial brake temperature by making up to 10 stops from 30 m.p.h. at a deceleration of not more than 10 f.p.s.p.s. On independently operated brake systems, the coldest brake shall be within 10 °F. of the hottest brake.

S7.2 *Pretest instrumentation check.* Conduct a general check of test instrumentation by making not more than 10 stops from a speed of not more than 30 m.p.h. at a deceleration of not more than 10 f.p.s.p.s. If test instrument repair, replacement, or adjustment is necessary, make not more than 10 additional stops after such repair, replacement or adjustment.

S7.3 *Service brake system—first (preburnished) effectiveness test.*

S7.3.1 *Service brake system.* Make six stops from 30 m.p.h. and then six stops from 60 m.p.h. with an initial brake temperature between 130 °F. and 150 °F.

S7.3.2 *Partial service brake system.* For a motorcycle with two independently actuated service brake systems, repeat S7.3.1 using each service brake system individually.

S7.4 *Service brake system—burnish procedure.* Burnish the brakes by making 200 stops from 30 m.p.h. at 12 f.p.s.p.s. The braking interval shall be either the distance necessary to reduce the initial brake temperature to between 130 °F. and 150 °F. or 1 mile, whichever occurs first. Accelerate at maximum rate to 30 m.p.h. immediately after each stop and maintain that speed until making the next stop. After burnishing adjust the brakes in accordance with the manufacturer's recommendation.

S7.5 *Service brake system—second effectiveness test.* Repeat S7.3.1. Then, make four stops from 80 m.p.h. and four stops from the multiple of 5 m.p.h. that is 4 m.p.h. to 8 m.p.h. less than the speed attainable in 1 mile if that speed is 95 m.p.h. or greater.

S7.6 *Service brake system—fade and recovery test.* These requirements do not apply to a motor-driven cycle whose speed attainable in 1 mile is 30 m.p.h. or less.

S7.6.1 *Baseline check stops.* Make three stops from 30 m.p.h. at 10 to 11 f.p.s.p.s. for each stop. Compute the average of the maximum brake pedal forces and the maximum brake lever forces required for the three stops.

S7.6.2 *Fade stops.* Make 10 stops from 60 m.p.h. at not less than 15 f.p.s.p.s. for each stop. The initial brake temperature before the first brake application shall be between 130 °F. and 150 °F. Initial brake temperatures before brake applications for subsequent stops shall be those occurring at the distance intervals. Attain the required deceleration as quickly as possible and maintain at least this rate for not less than three-fourths of the total stopping distance for each stop. The interval between the starts of service brake applications shall be 0.4 mile. Drive 1 mile at 30 m.p.h. after the last fade stop and immediately conduct the recovery test specified in S7.6.3.

S7.6.3 *Recovery test.* Make five stops from 30 m.p.h. at 10 to 11 f.p.s.p.s. for each stop. The braking interval shall not be more than 1 mile. Immediately after each stop accelerate at maximum rate to 30 m.p.h. and maintain that speed until making the next stop.

S7.7 *Service brake system—reburnish.* Repeat S7.4 except make 35 burnish stops instead of 200 stops. Brakes may be adjusted after reburnish if no tools are used. These requirements do not apply to a motor-driven cycle whose speed attainable in 1 mile is 30 m.p.h. or less.

S7.8 *Service brake system—final effectiveness test.* These requirements do not apply to a motor-driven cycle whose speed attainable in 1 mile is 30 m.p.h. or less.

S7.8.1 *Service brake system.* Repeat S7.5 including S7.3.1.

S7.8.2 *Partial service brake system test.* Alter the service brake system on three-wheeled motorcycles to induce a complete loss of braking in any one subsystem. Determine the line pressure or pedal force necessary to cause the brake system failure indicator to operate. Make six stops from 30 m.p.h. and then six stops from 60 m.p.h. with an initial brake temperature between 130 °F. and 150 °F. Repeat for each subsystem. Determine that the brake failure indicator is operating when the master cylinder fluid level is less than the level specified in S5.1.3.1(a)(2), and that it complies with S5.1.3.1(c). Check for proper operation with each reservoir in turn at a low level. Restore the service brake system to normal at completion of this test.

S7.9 *Parking brake test.* Starting with an initial brake temperature of not more than 150 °F., drive the motorcycle downhill on the 30 percent grade with the longitudinal axis of the motorcycle in the direction of the grade. Apply the service brakes with a force not exceeding 90 pounds to stop the motorcycle and place the transmission in neutral. Apply the parking brake by exerting a force not exceeding those specified in S5.6. Release the service brake and allow the motorcycle to remain at rest (to the limit of traction of the braked wheels) for 5 minutes. Repeat the test with the motorcycle parked in the reversed (uphill) position on the grade.

S7.10 *Service brake system—water recovery test.*

S7.10.1 *Baseline check stops.* Make three stops from 30 m.p.h. at 10 to 11 f.p.s.p.s. for each stop. Compute the average of the maximum brake pedal forces and of the maximum brake lever forces required for the three stops.

S7.10.2 *Wet brake recovery stops.* Completely immerse the rear brake assembly of the motorcycle in water for 2 minutes with the brake fully released. Next completely immerse the front brake assembly of the motorcycle in water for 2 minutes with the brake fully released. Perform the entire wetting procedure in not more than 7 minutes. Immediately after removal of the front brake from water, accelerate at a maximum rate to 30 mi/h without a brake application. Immediately upon reaching that speed make five stops, each from 30 mi/h at 10 to 11 ft/s^2 for each stop. After each stop (except the last) accelerate the motorcycle immediately at a maximum rate to 30 mi/h and begin the next stop.

S7.11 *Final inspection.* Upon completion of all the tests inspect the brake system in an assembled condition, for compliance with the brake lining inspection requirements. Disassemble all brakes and inspect:

(a) The entire brake system for detachment or fracture of any component.

(b) Brake linings for detachment from the shoe or pad.

(c) Wheel cylinder, master cylinder, and axle seals for fluid or lubricant leakage.

(d) Master cylinder for reservoir capacity and retention device.

(e) Master cylinder label for compliance with S5.1.2.2.

TABLE I—STOPPING DISTANCES FOR EFFECTIVENESS, FADE AND PARTIAL SYSTEM TESTS

Vehicle test speed, m.p.h.	Stopping distance, feet—Effectiveness tests			
	Preburnish effectiveness total system (S5.2.1)—I	Preburnish effectiveness partial mechanical systems (S5.2.2)—II	Effectiveness total system (S5.4) (SS5.7.1)—III	Effectiveness partial hydraulic systems (S5.7.2)—IV
15	13	30	11	25
20	24	54	19	44
25	37	84	30	68

TABLE I—STOPPING DISTANCES FOR EFFECTIVENESS, FADE AND PARTIAL SYSTEM TESTS—Continued

Vehicle test speed, m.p.h.	Stopping distance, feet—Effectiveness tests			
	Preburnish effectiveness total system (S5.2.1)—I	Preburnish effectiveness partial mechanical systems (S5.2.2)—II	Effectiveness total system (S5.4) (SS5.7.1)—III	Effectiveness partial hydraulic systems (S5.7.2)—IV
30	54	121	43	97
35	74	165	58	132
40	96	216	75	173
45	121	273	95	218
50	150	337	128	264
55	181	407	155	326
60	216	484	185	388
65			217	455
70			264	527
75			303	606
80			345	689
85			389	778
90			484	872
95			540	971
100			598	1076
105			659	1188
110			723	1302
115			791	1423
120			861	1549

TABLE II—BRAKE TEST SEQUENCE AND REQUIREMENTS

Sequence L.C.	Test procedure	Requirements
1. Instrumentation check	S7.2	
2. First (Preburnish) effectiveness test:		
(a) Service brake system	S7.3.1	S5.2.1
(b) Partial service brake system	S7.3.2	S5.2.2
3. Burnish procedure	S7.4	
4. Second effectiveness test	S7.5	S5.3
5. First fade and recovery test	S7.6	S5.4
6. Reburnish	S7.7	
7. Final effectiveness test:		
(a) Service brake system	S7.8.1	S5.5.1
(b) Partial service brake system	S7.8.2	S5.5.2
8. Parking brake test (three-wheeled motorcycles only)	S7.9	S5.6
9. Water recovery test	S7.10	S5.7
10. Design durability	S7.11	S5.8

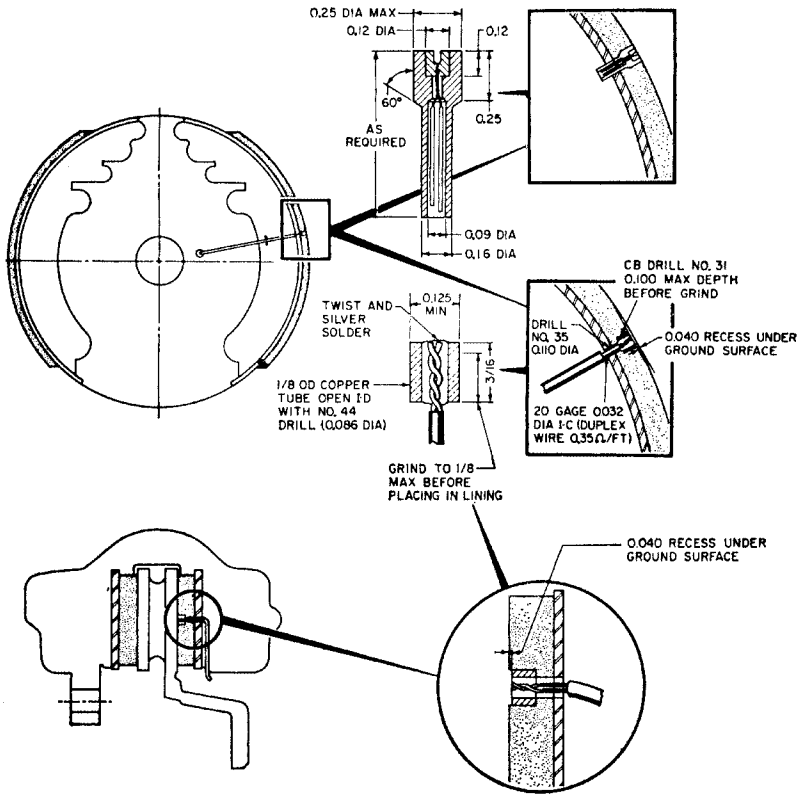

FIGURE 1 - TYPICAL PLUG TYPE THERMOCOUPLE INSTALLATIONS

FIG. 2 DIRECTION OF FORCE

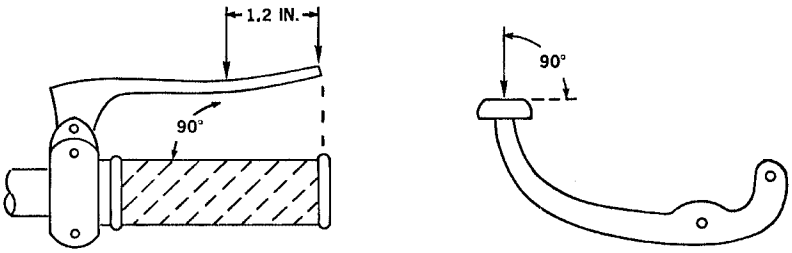

(BRAKE LEVER) (BRAKE PEDAL)

(Authority: Delegation of authority at 38 FR 12147; secs. 102, 103, 119, Pub. L. 89–563, 80 Stat. 718 (15 U.S.C. 1391, 1392, 1407); delegations of authority at 49 CFR 1.50 and 49 CFR 501.8)

[37 FR 5034, Mar. 9, 1972, as amended at 37 FR 11974, June 16, 1972; 38 FR 14753, June 5, 1973; 39 FR 32914, Sept. 12, 1974; 39 FR 43075, Dec. 10, 1974; 41 FR 24593, June 17, 1976; 43 FR 9606, Mar. 9, 1978; 43 FR 46548, Oct. 10, 1978; 66 FR 42617, Aug. 14, 2001]

§ 571.123 Standard No. 123; Motorcycle controls and displays.

S1. *Scope*. This standard specifies requirements for the location, operation, identification, and illumination of motorcycle controls and displays, and requirements for motorcycle stands and footrests.

S2. *Purpose*. The purpose of this standard is to minimize accidents caused by operator error in responding to the motoring environment, by standardizing certain motorcycle controls and displays.

S3. *Application*. This standard applies to motorcycles equipped with handlebars, except for motorcycles that are designed, and sold exclusively for use by law enforcement agencies.

S4. *Definitions*. *Clockwise* and *counterclockwise* mean opposing directions of rotation around the following axes, as applicable.

(a) The operational axis of the ignition control, viewed from in front of the ignition lock opening;

(b) The axis of the right handlebar on which the twist-grip throttle is located, viewed from the end of that handlebar;

(c) The axis perpendicular to the center of the speedometer, viewed from the operator's normal eye position.

S5. *Requirements*.

S5.1. Each motorcycle shall be equipped with a supplemental engine stop control, located and operable as specified in Table 1.

S5.2 Each motorcycle to which this standard applies shall meet the following requirements:

S5.2.1 *Control location and operation*. If any item of equipment listed in Table 1, Column 1, is provided, the control for such item shall be located as specified in Column 2, and operable as specified in Column 3. Each control located on a right handlebar shall be operable by the operator's right hand throughout its full range without removal of the operator's right hand from the throttle. Each control located on a left handlebar shall be operable by the operator's left hand throughout its full range without removal of the operator's left hand from the handgrip. If a motorcycle with an automatic clutch is equipped with a supplemental rear brake control, the control shall be located on the left handlebar. If a motorcycle is equipped with self-proportioning or antilock braking devices utilizing a single control for front and rear brakes, the control shall be located and operable in the same manner as a rear brake control.

S5.2.2 *Display illumination and operation*. If an item of equipment listed in Table 2, Column 1, is provided, the display for such item shall be visible to a seated operator under daylight conditions, shall illuminate as specified in Column 2, and shall operate as specified in Column 3.

S5.2.3 *Control and display identification*. If an item of equipment in Table 3, Column 1, is provided, the item and its operational function shall be identified by:

(a) A symbol substantially in the form shown in Column 3; or

(b) Wording shown in both Column 2 and Column 4; or

(c) A symbol substantially in the form shown in Column 3 and wording shown in both Column 2 and Column 4.

(d) The abbreviations ''M.P.H.'', ''km/h'', ''r/min'', ''Hi'', ''Lo'', ''L'', ''R'', and ''Res'' appearing in Column 2 and Column 4 may be spelled in full. Symbols and words may be provided for equipment items where none are shown in Column 2, Column 3, and Column 4. Any identification provided shall be placed on or adjacent to the control or display position, and shall appear upright to the operator.

S5.2.4 *Stands*. A stand shall fold rearward and upward if it contacts the ground when the motorcycle is moving forward.

S5.2.5 *Footrests*. Footrests shall be provided for each designated seating position. Each footrests for a passenger other than an operator shall fold rearward and upward when not in use.

TABLE 1—MOTORCYCLE CONTROL LOCATION AND OPERATION REQUIREMENTS

Equipment control—Column 1	Location—Column 2	Operation—Column 3
1. Manual clutch or integrated clutch and gear change.	Left handlebar	Squeeze to disengage clutch.
2. Foot operated gear change	Left foot control	An upward motion of the operator's toe shifts transmission toward lower numerical gear ratios (commonly referred to as ''higher gears''), and a downward motion toward higher numerical gear ratios (commonly referred to as ''lower gears''). If three or more gears are provided it shall not be possible to shift from the highest gear directly to the lowest gear, or vice versa.
3. Headlamp upper-lower beam control	Left handlebar	Up for upper beam, down for lower beam. If combined with the headlight on-off switch, means shall be provided to prevent inadvertent actuation of the ''off'' function.
4. Horn	.....do	Push to activate.
5. Turn signal lamps	Handlebars.	
6. Ignition		''Off''—counterclockwise from other positions.
7. Manual fuel shutoff control		Rotate to operate. ''On'' and ''Off'' are separated by 90 degrees of rotation. ''Off'' and ''Reserve'' (if provided) are separated by 90 degrees of rotation. Sequence order: ''On''—''Off''—''Reserve''.
8. Twist-grip throttle	Right handlebar	Self-closing to idle in a clockwise direction after release of hand.
9. Supplemental engine stop	.....do.	
10. Front wheel brake	.....do	Squeeze to engage.
11. Rear wheel brakes	Right foot control [1] Left handlebar permissible for motor-driven cycles.	Depress to engage.

[1] See S5.2.1 for requirements for vehicles with a single control for front and rear brakes, and with a supplemental rear brake control.

TABLE 2—MOTORCYCLE DISPLAY ILLUMINATION AND OPERATION REQUIREMENTS

Display—Column 1	Illumination—Column 2	Operation—Column 3
1. Speedometer	Yes	The display is illuminated whenever the headlamp is activated.
2. Neutral indication	Green display lamp	The display lamp illuminates when the gear selector is in neutral position.

Table 3
Motorcycle Control and Display Identification Requirements

No.	Column 1	Column 2	Column 3	Column 4
	Equipment	*Control and Display Identification Word*	*Control and Display Identification Symbol*	*Identification at Appropriate Position of Control and Display*
1	Ignition	Ignition	—	Off
2	Supplemental Engine Stop (Off, Run)	Engine Stop		Off, Run
3	Manual Choke or Mixture Enrichment	Choke or Enrichener		—
4	Electric Starter	—		Start [1]
5	Headlamp Upper-Lower Beam Control	Lights	[2]	Hi, Ho
6	Horn	Horn		—
7	Turn Signal	Turn	[2] [3]	L, R
8	Speedometer	km/h [5] M.P.H.	—	km/h [5] M.P.H. [4]
9	Neutral Indicator	Neutral	N	—
10	Upper Beam Indicator	High Beam	[2]	—
11	Tachometer	R.P.M. or r/min.	—	—
12	Fuel Tank Shutoff Valve (Off, On, Res.)	Fuel	[2] [2]	Off, On, Res.

1 Required only if electric starter is separate from ignition switch.

2 Framed areas may be filled.

3 The pair of arrows is a single symbol. When the indicators for left and right turn operate independently, however, the two arrows will be considered separate symbols and may be spaced acdordingly.

4 M.P.H. increase in a clockwise direction. Major graduations and numerals appear at 10 mph intervals, minor graduations at the 5 mph intervals. (37 F.R. 17474–August 29, 1972. Effective: 9/1/74)

5 If the speedometer is graduated in miles per hour (MPH) and in kilometers per hour (km/h), the identifying words or abbreviation shall be MPH and km/h in any combination of upper or lower case letters.

[37 FR 7207, Apr. 12, 1972, as amended at 37 FR 17475, Aug. 29, 1972; 39 FR 32915, Sept. 12, 1974; 48 FR 42819, Sept. 20, 1983; 49 FR 35381, Sept. 7, 1984; 49 FR 35504, Sept. 10, 1984; 56 FR 61387, Dec. 3, 1991; 63 FR 28933, May 27, 1998; 63 FR 51001, Sept. 24, 1998]

§571.124 Standard No. 124; Accelerator control systems.

S1. *Scope*. This standard establishes requirements for the return of a vehicle's throttle to the idle position when the driver removes the actuating force from the accelerator control, or in the event of a severance or disconnection in the accelerator control system.

S2. *Purpose*. The purpose of this standard is to reduce deaths and injuries resulting from engine overspeed caused by malfunctions in the accelerator control system.

S3. *Application*. This standard applies to passenger cars, multi-purpose passenger vehicles, trucks, and buses.

S4. *Definitions*.

S4.1 *Driver-operated accelerator control system* means all vehicle components, except the fuel metering device, that regulate engine speed in direct response to movement of the driver-operated control and that return the throttle to the idle position upon release of the actuating force.

Fuel metering device means the carburetor, or in the case of certain engines the fuel injector, fuel distributor or fuel injection pump.

Throttle means the component of the fuel metering device that connects to the driver-operated accelerator control system and that by input from the driver-operated accelerator control system controls the engine speed.

Idle position means the position of the throttle at which it first comes in contact with an engine idle speed control appropriate for existing conditions according to the manufacturers' recommendations. These conditions include, but are not limited to, engine speed adjustments for cold engine, air conditioning, and emission control, and the use of throttle setting devices.

Ambient temperature means the surrounding air temperature, at a distance such that it is not significantly affected by heat from the vehicle under test.

S4.2 In the case of vehicles powered by electric motors, the words *throttle* and *idle* refer to the motor speed controller and motor shutdown, respectively.

S5. *Requirements*. The vehicle shall meet the following requirements when the engine is running under any load condition, and at any ambient temperature between −40 degrees Celsius and +52 degrees Celsius after 12 hours of conditioning at any temperature within that range.

S5.1 There shall be at least two sources of energy capable of returning the throttle to the idle position within the time limit specified by S5.3 from any accelerator position or speed whenever the driver removes the opposing actuating force. In the event of failure of one source of energy by a single severance or disconnection, the throttle shall return to the idle position within the time limits specified by S5.3, from any accelerator position or speed whenever the driver removes the opposing actuating force.

S5.2 The throttle shall return to the idle position from any accelerator position or any speed of which the engine is capable whenever any one component of the accelerator control system is disconnected or severed at a single point. The return to idle shall occur within the time limit specified by S5.3, measured either from the time of severance or disconnection or from the first removal of the opposing actuating force by the driver.

S5.3 Except as provided below, maximum time to return to idle position shall be 1 second for vehicles of 4536 kilograms or less GVWR, and 2 seconds for vehicles of more than 4536 kilograms GVWR. Maximum time to return to idle position shall be 3 seconds for any vehicle that is exposed to ambient air at −18 degrees Celsius to −40 degrees Celsius during the test or for any portion of the 12-hour conditioning period.

[38 FR 2980, Jan. 31, 1973; as amended at 60 FR 13645, Mar. 14, 1995]

§571.125 Standard No. 125; Warning devices.

S1. *Scope*. This standard establishes requirements for devices, without self-contained energy sources, that are designed to be carried in motor vehicles and used to warn approaching traffic of the presence of a stopped vehicle, except for devices designed to be permanently affixed to the vehicle.

S2. *Purpose*. The purpose of this standard is to reduce deaths and injuries due to rear end collisions between moving traffic and disabled vehicles.

S3. *Application*. This standard applies to devices, without self-contained energy sources, that are designed to be carried in buses and trucks that have a gross vehicle weight rating (GVWR) greater than 10,000 pounds. These devices are used to warn approaching traffic of the presence of a stopped vehicle, except for devices designed to be permanently affixed to the vehicle.

S4. *Definitions*. *Entrance angle* means the angle having as its sides the line through the center, and normal to the face, of the object to be tested, and the line from the center of the object to the center of the source of illumination (Figure 2).

Fluorescent means the property of emitting visible light due to the absorption of radiation of a shorter wavelength which may be outside the visible spectrum.

Observation angle means the angle having as its sides the line from the observation point to the center of the object to be tested and the line from the center of that object to the center of the source of illumination (Figure 2).

Reflex reflective means reflective of light in directions close to the direction of incident light, over a wide range of variations in the direction of incident light.

S5. *Requirements*.

S5.1 *Equipment*.

S5.1.1 Reflex reflective material and fluorescent material that meet the requirements of this standard shall be affixed to both faces of the warning device. Alternatively, a dual purpose orange fluorescent and red reflective material that meets the requirements of this standard (hereafter referred to as ''dual purpose material'') may be affixed to both faces in places of the reflective and fluorescent materials.

S5.1.2 Each warning device shall be protected from damage and deterioration—

(a) By enclosure in an opaque protective reusable container, except that two or three warning devices intended to be sold for use as a set with a single vehicle may be enclosed in a single container; or

(b) By secure attachment to any light-tight, enclosed, and easily accessible compartment of a new motor vehicle with which it is supplied by the vehicle manufacturer.

S5.1.3 The warning device shall be designed to be erected, and replaced in its container, without the use of tools.

S5.1.4 The warning device shall be permanently and legibly marked with:

(a) Name of manufacturer;

(b) Month and year of manufacture, which may be expressed numerically, as ''6/72''; and

(c) The symbol DOT, or the statement that the warning device complies with all applicable Federal motor vehicle safety standards.

S5.1.5 Each warning device shall have instructions for its erection and display.

(a) The instructions shall be either indelibly printed on the warning device or attached in such a manner that they cannot be easily removed.

(b) Instructions for each warning device shall include a recommendation that the driver activate the vehicular hazard warning signal lamps before leaving the vehicle to erect the warning device.

(c) Instructions shall include the illustration depicted in Figure 3 indicating recommended positioning.

S5.2 *Configuration*.

S5.2.1 When the warning device is erected on level ground:

(a) Part of the warning device shall form an equilateral triangle that stands in a plane not more than 10° from the vertical, with the lower edge of the base of the triangle horizontal and not less than 1 inch above the ground.

(b) None of the required portion of the reflective material and fluorescent material shall be obscured by any other part of the warning device except for any portion of the material over which it is necessary to provide fasteners, pivoting beads or other means to allow collapsibility or support of the device. In any event, sufficient reflective and fluorescent material shall be used on the triangle to meet the requirements of S5.4 and S5.5.

S5.2.2 Each of the three sides of the triangular portion of the warning device shall not be less than 17 and not

more than 22 inches long, and not less than 2 and not more than 3 inches wide (Figure 1).

S5.2.3 Each face of the triangular portion of the warning device shall have an outer border of red reflex reflective material of uniform width and not less than 0.75 and not more than 1.75 inches wide, and an inner border of orange fluorescent material of uniform width and not less than 1.25 and not more than 1.30 inches wide (Figure 1). However, this requirement shall not apply if the dual purpose material is used.

S5.2.4 Each vertex of the triangular portion of the warning device shall have a radius of not less than 0.25 inch and not more than 0.50 inch.

S5.2.5 All edges shall be rounded or chamfered, as necessary, to reduce the possibility of cutting or harm to the user.

S5.2.6 The device shall consist entirely of the triangular portion and attachments necessary for its support and enclosure, without additional visible shapes or attachments.

S5.3 *Color*.

S5.3.1 The color of the red reflex reflective material on the warning device shall have the following characteristics, both before and after the warning device has been conditioned in accordance with S6.1, when the source of illumination is a lamp with a tungsten filament operating at 2856° Kelvin color temperature. Expressed in terms of the International Commission on Illumination (CIE) 1931 standard colorimetric observer system (CIE chromaticity diagram, Figure 4), the chromaticity coordinates of the red reflex reflective material shall lie within the region bounded by the spectrum locus and the lines on the diagram defined by the following equations:

Boundary	Equations
Yellow	y=0.33
White	x+y=0.98

S5.3.2 The color of the orange fluorescent material on the warning device shall have the following characteristics, both before and after the warning device has been conditioned in accordance with S6.1, when the source of illumination is a 150-watt high pressure xenon compact arc lamp. Expressed in terms of the International Commission on Illumination (CIE) 1931 standard colorimetric observer system, the chromaticity coordinates of the orange fluorescent material shall lie within the region bounded by the spectrum locus and the lines on the diagram defined by the following equations:

Boundary	Equations
Yellow	y=0.49 x+0.17
White	x+y=0.93
Red	y=0.35

The 150-watt high pressure xenon compact arc lamp shall illuminate the sample using the unmodified spectrum at an angle of incidence of 45° and an angle of observation of 90°. If dual purpose material is being tested, it shall be illuminated by a 150-watt high pressure xenon compact arc lamp, whose light is diffused by an integrating sphere.

S5.4 *Reflectivity*. When the red reflex reflective material on the warning device is tested in accordance with S6.2, both before and after the warning device has been conditioned in accordance with S6.1, its total candlepower per incident foot candle shall be not less than the values specified in Table I for each of the listed entrance angles.

S5.5 *Luminance*. When the orange fluorescent material on the warning device is tested in accordance with S6.3, both before and after the warning device has been conditioned in accordance with S6.1, it shall have a minimum relative luminance of 25 percent of a flat magnesium oxide surface and a minimum product of that relative luminance and width in inches of 44.

S5.6 *Stability*. When the warning device is erected on a horizontal brushed concrete surface both with and against the brush marks and subjected to a horizontal wind of 40 miles per hour in any direction for 3 minutes—

(a) No part of it shall slide more than 3 inches from its initial position;

(b) Its triangular portion shall not tilt to a position that is more than 10° from the vertical; and

(c) Its triangular position shall not turn through a horizontal angle of more than 10° in either direction from the initial position.

S5.7 *Durability*. When the warning device is conditioned in accordance with S6.1, no part of the warning device shall become warped or separated from the rest of the warning device.

S6. *Test Procedures*.

S6.1 *Conditions*.

S6.1.1 Submit the warning device to the following conditioning sequence, returning the device after each step in the sequence to ambient air at 68 °F. for at least 2 hours.

(a) Minus 40 °F. for 16 hours in a circulating air chamber using ambient air which would have not less than 30 percent and not more than 70 percent relative humidity at 70 °F.;

(b) 150 °F. for 16 hours in a circulating air oven using ambient air which would have not less than 30 percent and not more than 70 percent relative humidity at 70 °F.;

(c) 100 °F. and 90 percent relative humidity for 16 hours;

(d) Salt spray (fog) test in accordance with American Society of Testing and Materials Standard B–117, Standard Method of Salt Spray (fog) testing, August 1964, except that the test shall be for 4 hours rather than 40 hours; and

(e) Immersion for 2 hours in water at a temperature of 100 °F.

S6.2 *Reflectivity Test*. Test the red reflex reflective materials as follows:

(a) Unless dual purpose material is used, prevent the orange fluorescent material from affecting the photometric measurement of the reflectivity of the red reflex reflective material, either by separation or masking.

(b) Use a lamp with a tungsten filament operating at 2856° Kelvin color temperature as the source of illumination.

(c) Place the source of illumination 100 feet from the red reflex reflective material (Figure 2).

(d) Place the observation point directly above the source of illumination (Figure 2).

(e) Calculate the total candlepower per incident foot candle of the red reflex reflective material at each of the entrance and observation angles specified in Table 1.

S6.3 *Luminance Test*. Test the orange fluorescent material as follows:

(a) Unless dual purpose material is used, prevent the red reflex reflective material from affecting the photometric measurement of the luminance of the orange fluorescent material.

(b) Using a 150-watt high pressure xenon compact arc lamp as the light source, illuminate the test sample at an angle of incidence of 45° and an angle of observation of 90°. If dual purpose material is being tested, illuminate the sample diffusely through an integrating sphere.

(c) Measure the luminance of the material at a perpendicular viewing angle, with no ray of the viewing beam more than 5° from the perpendicular to the specimen.

(d) Repeat the procedure for a flat magnesium oxide surface, and compute the quotient (percentage) of the luminance of the material relative to that of the magnesium oxide surface.

WARNING DEVICE

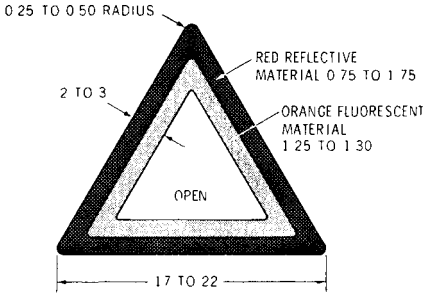

FIG. 1. DIMENSIONS OF WARNING DEVICE (INCHES)

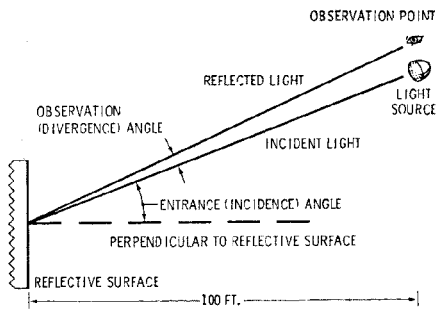

REFLECTIVITY TEST DIAGRAM

Figure 2

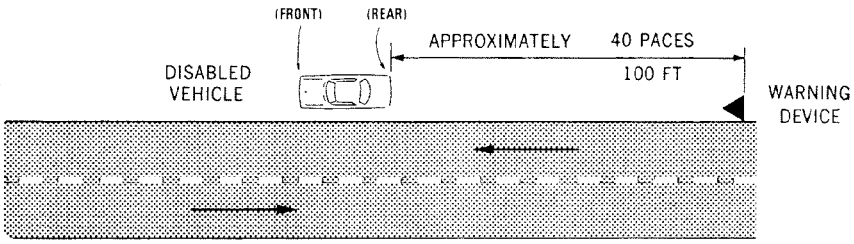

RECOMMENDED WARNING DEVICE POSITIONING

Figure 3

TOTAL MINIMUM CANDLEPOWER PER INCIDENT FOOT CANDLE

Observation Angles - Degrees	Entrance Angles - Degrees						
	0	10 up	10 down	20 left	20 right	30 left	30 right
0.2	80	80	80	40	40	8.0	8.0
1.5	0.8	0.8	0.8	0.4	0.4	0.08	0.08

TABLE 1

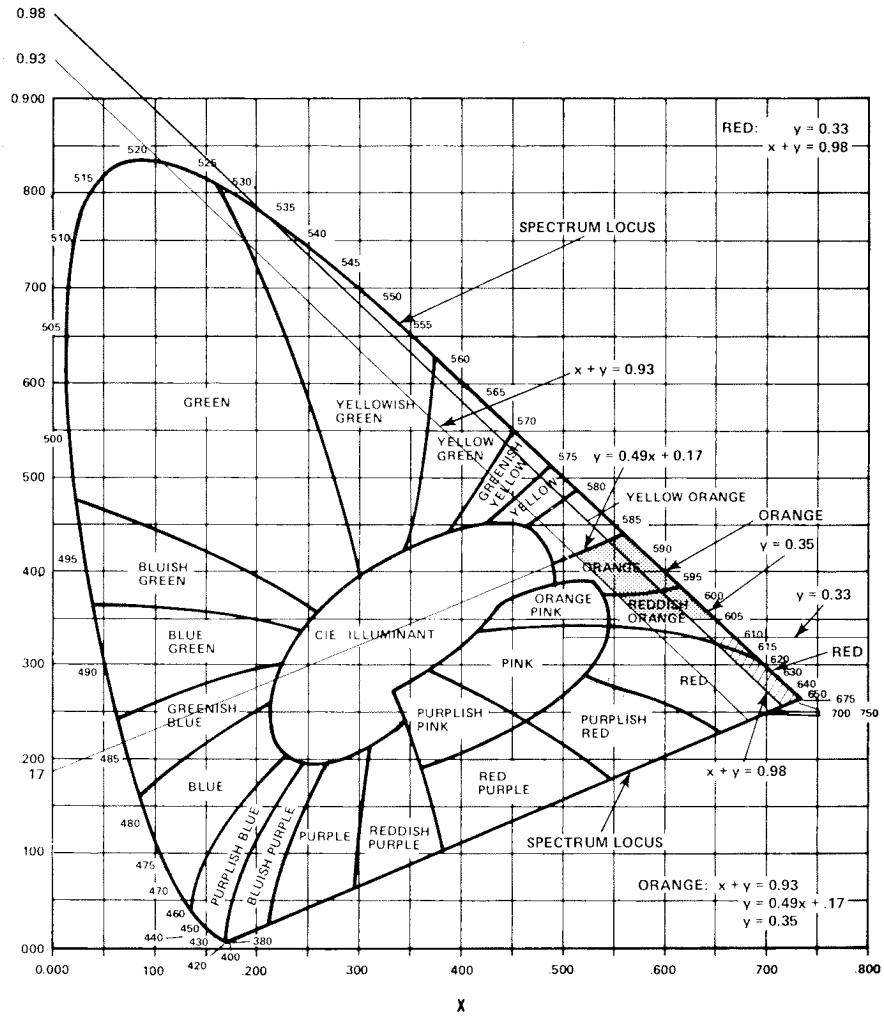

Figure 4. CIE Chromaticity Diagram.

[39 FR 28636, Aug. 9, 1974, as amended at 40 FR 4, Jan. 2, 1975; 59 FR 49591, Sept. 29, 1994]

§§ 571.126–571.128 [Reserved]

§ 571.129 Standard No. 129; New non-pneumatic tires for passenger cars.

S1 *Scope*. This standard specifies tire dimensions and laboratory test requirements for lateral strength, strength, endurance, and high speed performance; defines the tire load rating; and specifies labeling requirements for non-pneumatic spare tires.

S2 *Application*. This standard applies to new temporary spare non-pneumatic tires for use on passenger cars.

S3 *Definitions*.

Carcass means the tire structure except for the tread which provides the major portion of the tire's capability to deflect in response to the vertical

loads and tractive forces that the tire transmits from the roadway to the non-pneumatic rim, the wheel center member, or the vehicle and which attaches to the vehicle or attaches, either integrally or separably, to the wheel center member or non-pneumatic rim.

Carcass separation means the pulling away of the carcass from the non-pneumatic rim or wheel center member.

Chunking means the breaking away of pieces of the carcass or tread.

Cracking means any parting within the carcass, tread, or any components that connect the tire to the non-pneumatic rim or wheel center member and, if the non-pneumatic tire is integral with the non-pneumatic rim or wheel center member, any parting within the non-pneumatic rim, or wheel center member.

Load rating means the maximum load a tire is rated to carry.

Maximum tire width means the greater of either the linear distance between the exterior edges of the carcass or the linear distance between the exterior edges of the tread, both being measured parallel to the rolling axis of the tire.

Non-pneumatic rim means a mechanical device which, when a non-pneumatic tire assembly incorporates a wheel, supports the tire, and attaches, either integrally or separably, to the wheel center member and upon which the tire is attached.

Non-pneumatic test rim means with reference to a tire to be tested, any non-pneumatic rim that is listed as appropriate for use with that tire in accordance with S4.4.

Non-pneumatic tire means a mechanical device which transmits, either directly or through a wheel or wheel center member, the vertical load and tractive forces from the roadway to the vehicle, generates the tractive forces that provide the directional control of the vehicle and does not rely on the containment of any gas or fluid for providing those functions.

Non-pneumatic tire assembly means a non-pneumatic tire, alone or in combination with a wheel or wheel center member, which can be mounted on a vehicle.

Non-pneumatic tire identification code means an alphanumeric code that is assigned by the manufacturer to identify the tire with regard to its size, application to a specific non-pneumatic rim or wheel center member or application to a specific vehicle.

Test wheel center member means with reference to a tire to be tested, any wheel center member that is listed as appropriate for use with that tire in accordance with S4.4.

Tread means that portion of the tire that comes in contact with the road.

Tread separation means pulling away of the tread from the carcass.

Wheel means a mechanical device which consists of a non-pneumatic rim and wheel center member and which, in the case of a non-pneumatic tire assembly incorporating a wheel, provides the connection between the tire and the vehicle.

Wheel center member means, in the case of a non-pneumatic tire assembly incorporating a wheel, a mechanical device which attaches, either integrally or separably, to the non-pneumatic rim and provides the connection between the non-pneumatic rim and the vehicle; or in the case of a non-pneumatic tire assembly not incorporating a wheel, a mechanical device which attaches, either integrally or separably, to the non-pneumatic tire and provides the connection between the tire and the vehicle.

S4 *Requirements.*

S4.1 *Size and Construction.* Each tire shall be designed to fit each non-pneumatic rim or wheel center member specified for its non-pneumatic tire identification code designation in a listing in accordance with section S4.4.

S4.2 *Performance Requirements*

S4.2.1 *General.* Each tire shall conform to the following:

(a) Its load rating shall be that specified in a submission made by a manufacturer, pursuant to S4.4(a), or in one of the publications described in S4.4(b) for its non-pneumatic tire identification code designation.

(b) It shall incorporate a tread wear indicator that will provide a visual indication that the tire has worn to a tread depth of 1/16 inch.

(c) It shall, before being subjected to either the endurance test procedure specified in S5.4 or the high speed performance procedure specified in S5.5,

exhibit no visual evidence of tread or carcass separation, chunking or cracking.

(d) It shall meet the requirements of S4.2.2.5 and S4.2.2.6 when tested on a test wheel described in S5.4.2.1 either alone or simultaneously with up to 5 tires.

S4.2.2 *Test Requirements.*

S.4.2.2.1 *Test Sample.* For each test sample use:

(a) One tire for physical dimensions, lateral strength, and strength in sequence;

(b) A second tire for tire endurance; and

(c) A third tire for high speed performance.

S4.2.2.2 *Physical Dimensions.* For a non-pneumatic tire assembly in which the tire is separable from the non-pneumatic rim or wheel center member, the dimensions, measured in accordance with S5.1, for that portion of the tire that attaches to that non-pneumatic rim or wheel center member shall satisfy the dimensional specifications contained in the submission made by an individual manufacturer, pursuant to S4.4(a), or in one of the publications described in S4.4(b) for that tire's non-pneumatic tire identification code designation.

S4.2.2.3 *Lateral Strength.* There shall be no visual evidence of tread or carcass separation, cracking or chunking, when a tire is tested in accordance with S5.2 to a load of:

(a) 1,500 pounds for tires with a load rating less than 880 pounds;

(b) 2,000 pounds for tires with a load rating of 880 pounds or more but less than 1,400 pounds.

(c) 2,500 pounds for tires with a load rating of 1,400 pounds or more, using the load rating marked on the tire or tire assembly.

S4.2.2.4 *Tire Strength.* There shall be no visual evidence of tread carcass separation, cracking or chunking, when a tire is tested in accordance with S5.3 to a minimum energy level of:

Load rating	Minimum energy level
Below 880 pounds	1950 inch pounds.
880 pounds and above	2600 inch pounds.

S4.2.2.5 *Tire Endurance.* When the tire has been subjected to the laboratory endurance test specified in S5.4, using, if applicable, a non-pneumatic test rim or test wheel center member that undergoes no permanent deformation, there shall be no visual evidence of tread or carcass separation, cracking or chunking. In the case of a non-pneumatic tire assembly in which the non-pneumatic tire is an integral part of the assembly, the assembly shall undergo no permanent deformation with the exception of wear of the tread.

S4.2.2.6 *High Speed Performance.* When the tire has been subjected to the laboratory high speed performance test specified in S5.5, using if applicable, a non-pneumatic test rim or test wheel center member that undergoes no permanent deformation, there shall be no visual evidence of tread or carcass separation, cracking or chunking. In the case of a non-pneumatic tire assembly in which the non-pneumatic tire is an integral part of the assembly, the assembly shall undergo no permanent deformation with the exception of wear of the tread.

S4.3 *Labeling Requirements.* Each non-pneumatic tire or, in the case of a non-pneumatic tire assembly in which the non-pneumatic tire is an integral part of the assembly, each non-pneumatic tire assembly shall include, in letters or numerals not less than 0.078 inches high, the information specified in paragraphs S4.3 (a) through (f). The information shall be permanently molded, stamped or otherwise permanently marked into or onto the non-pneumatic tire or non-pneumatic tire assembly, except that the information specified in S4.3(d) and S4.3(g) may appear on a label that is permanently attached to the tire or tire assembly. If a label is used, it shall be subsurface printed, made of a material that is resistant to fade, heat, moisture, and abrasion, and attached in such a manner that it cannot be removed without destroying or defacing the label on the non-pneumatic tire or tire assembly. The information shall appear on both sides of the non-pneumatic tire or non-pneumatic tire assembly, except, in the case of a non-pneumatic tire assembly which has a particular side that must always face outward when mounted on a vehicle, in which case the information shown in paragraphs S4.3 (a) through (g) shall only be required on

the outward facing side. The information shall be positioned on the tire or tire assembly such that it is not placed on the tread or the outermost edge of the tire and is not obstructed by any portion of any non-pneumatic rim or wheel center member designated for use with that tire in S4.4 of this standard or in 49 CFR 571.110 or 49 CFR 571.120.

(a) The non-pneumatic tire identification code (''NPTIC'');

(b) Load rating, which, if expressed in kilograms, shall be followed in parenthesis by the equivalent load rating in pounds, rounded to the nearest whole pound;

(c) For a non-pneumatic tire that is not an integral part of a non-pneumatic tire assembly, the size and type designation of the non-pneumatic rim or wheel center member that is contained in the submission made by a manufacturer, pursuant to S4.4(a), or in one of the publications described in S4.4(b) for that tire's non-pneumatic tire identification code designation;

(d) The name of the manufacturer or brand name;

(e) The symbol DOT in the manner specified in part 574 of this chapter, which shall constitute a certification that the tire conforms to applicable Federal motor vehicle safety standards;

(f) The tire identification number required by §574.5 of this chapter;

(g) The labeling requirements set forth in S6 of Standard No. 110 (§571.110), or S8 of Standard No. 120 (§571.120).

S4.4 *Non-Pneumatic Tire Identification Code and Non-Pneumatic Rim/Wheel Center Member Matching Information.* For purposes of this standard, S8 of 49 CFR 571.110 and S10 of 49 CFR 571.120, each manufacturer of a non-pneumatic tire that is not an integral part of a non-pneumatic tire assembly shall ensure that it provides a listing to the public for each non-pneumatic tire that it produces. The listing shall include the non-pneumatic tire identification code, tire load rating, dimensional specifications and a diagram of the portion of the tire that attaches to the non-pneumatic rim or wheel center member, and a list of the non-pneumatic rims or wheel center members that may be used with that tire. For each non-pneumatic rim or wheel center member included in such a listing, the information provided shall include a size and type designation for the non-pneumatic rim or wheel center member, and dimensional specifications and a diagram of the non-pneumatic rim or portion of the wheel center member that attaches to the tire. A listing compiled in accordance with paragraph (a) of this section need not include dimensional specifications or a diagram of the non-pneumatic rim or portion of the wheel center member that attaches to the tire if the non-pneumatic rim's or portion of the wheel center member's dimensional specifications and diagram are contained in each listing published in accordance with paragraph (b) of this section. The listing shall be in one of the following forms:

(a) Listed by manufacturer name or brand name in a document furnished to dealers of the manufacturer's tires or, in the case of non-pneumatic tires supplied only as a temporary spare tire on a vehicle, in a document furnished to dealers of vehicles equipped with the tires, to any person upon request, and in duplicate to the Office of Vehicle Safety Standards, Crash Avoidance Division, National Highway Traffic Safety Administration, U.S. Department of Transportation, Washington, DC 20590; or

(b) Contained in publications, current at the date of manufacture of the tire or any later date, of at least one of the following organizations:

The Tire and Rim Association
The European Tyre and Rim Technical Organization
Japan Automobile Tire Manufacturers' Association, Inc.
Deutche Industrie Norm
British Standards Institute
Scandinavian Tire and Rim Organization
Tyre and Rim Association of Australia

S5. *Test Procedures.*

S5.1 *Physical Dimensions.* After conditioning the tire at room temperature for at least 24 hours, using equipment with minimum measurement capabilities of one-half the smallest tolerance specified in the listing contained in the

submission made by a manufacturer pursuant to S4.4(a), or in one of the publications described in S4.4(b) for that tire's non-pneumatic tire identification code designation, measure the portion of the tire that attaches to the non-pneumatic rim or the wheel center member. For any inner diameter dimensional specifications, or other dimensional specifications that are uniform or uniformly spaced around some circumference of the tire, these measurements shall be taken at least six points around the tire, or, if specified, at the points specified in the listing contained in the submission made by an individual manufacturer, pursuant to S4.4(a), or in one of the publications described in S4.4(b) for that tire's non-pneumatic tire identification code designation.

S5.2 *Lateral Strength.*

S5.2.1 *Preparation of the tire.*

S5.2.1.1 If applicable, mount a new tire on a non-pneumatic test rim or test wheel center member.

S5.2.1.2 Mount the tire assembly in a fixture as shown in Figure 1 with the surface of the tire assembly that would face outward when mounted on a vehicle facing toward the lateral strength test block shown in Figure 2 and force the lateral strength test block against the tire.

S5.2.2 *Test Procedure.*

S5.2.2.1 Apply a load through the block to the tire at a rate of 2 inches per minute, with the load arm parallel to the tire assembly at the time of engagement and the first point of contact with the test block being the test block centerline shown in Figure 2, at the following distances, B, in sequence, as shown in Figure 1:

B=A—1 inch
B=A—2 inches
B=A—3 inches
B=A—4 inches
B=A—5 inches, and
B=A—6 inches.

However, if at any time during the conduct of the test, the test block comes in contact with the non-pneumatic test rim or test wheel center member, the test shall be suspended and no further testing at smaller values of the distance B shall be conducted. When tested to the above procedure, satisfying the requirements of S4.2.2.3 for all values of B greater than that for which contact between the non-pneumatic test rim or test wheel center member and the test block is made, shall constitute compliance to the requirements set forth in S4.2.2.3.

S5.3 *Tire Strength.*

S5.3.1 *Preparation of the Tire.*

S5.3.1.1 If applicable, mount the tire on a non-pneumatic test rim or test wheel center member.

S5.3.1.2 Condition the tire assembly at room temperature for at least three hours.

S5.3.2 *Test Procedures.*

S5.3.2.1 Force the test cleat, as defined in S5.3.2.2, with its length axis (see S5.3.2.2(a)) parallel to the rolling axis of the non-pneumatic tire assembly, and its height axis (see S5.3.2.2(c)), coinciding with a radius of the non-pneumatic tire assembly, into the tread of the tire at five test points equally spaced around the circumference of the tire. At each test point, the test cleat is forced into the tire at a rate of two inches per minute until the applicable minimum energy level, as shown in S4.2.2.4, calculated using the formula contained in S5.3.2.3, is reached.

S5.3.2.2 The test cleat is made of steel and has the following dimensions;

(a) Minimum length of one inch greater than the maximum tire width of the tire,

(b) Width of one-half inch with the surface which contacts the tire's tread having one-quarter inch radius, and

(c) Minimum height of one inch greater than the difference between the unloaded radius of the non-pneumatic tire assembly and the maximum radius of the non-pneumatic rim or wheel center member, if used with the non-pneumatic tire assembly being tested.

S5.3.2.3 The energy level is calculated by the following formula:

$$E = \frac{F \times P}{2}$$

where

E=Energy level, inch-pounds;
F=Force, pounds; and
P=Penetration, inches

S5.4 *Tire Endurance.*

S5.4.1 *Preparation of the tire.*

S5.4.1.1 If applicable, mount a new tire on a non-pneumatic test rim or test wheel center member.

S5.4.1.2 Condition the tire assembly to 100±5 °F. for at least three hours.

S5.4.2 *Test Procedure.*

S5.4.2.1 Mount the tire assembly on a test axle and press it against a flat-faced steel test wheel 67.23 inches in diameter and at least as wide as the maximum tire width of the tire to be tested or an approved equivalent test wheel, with the applicable test load specified in the table in S5.4.2.3 for the tire's non-pneumatic tire identification code designation.

S5.4.2.2 During the test, the air surrounding the test area shall be 100±5 °F.

S5.4.2.3 Conduct the test at 50 miles per hour (m.p.h.) in accordance with the following schedule without interruption: The loads for the following periods are the specified percentage of the load rating marked on the tire or tire assembly:

	Percent
4 hours	85
86 hours	90
24 hours	100

S5.4.2.4 Immediately after running the tire the required time, allow the tire to cool for one hour, then, if applicable, detach it from the non-pneumatic test rim or test wheel center member, and inspect it for the conditions specified in S4.2.2.5.

S5.5 *High Speed Endurance.*

S5.5.1 After preparing the tire in accordance with S5.4.1, if applicable, mount the tire assembly in accordance with S5.4.2.1, and press it against the test wheel with a load of 88 percent of the tire's load rating as marked on the tire or tire assembly.

S5.5.2 Break in the tire by running it for 2 hours at 50 m.p.h.

S5.5.3 Allow to cool to 100±5 °F.

S5.5.4 Test at 75 m.p.h. for 30 minutes, 80 m.p.h. for 30 minutes and 85 m.p.h. for 30 minutes.

S5.5.5 Immediately after running the tire for the required time, allow the tire to cool for one hour, then, if applicable, detach it from the non-pneumatic test rim or test wheel center member, and inspect it for the conditions specified in S4.2.2.6.

S6. *Nonconforming tires.* Any non-pneumatic tire that is designed for use on passenger cars that does not conform to all the requirements of this standard, shall not be sold, offered for sale, introduced or delivered for introduction into interstate commerce, or imported into the United States, for any purpose.

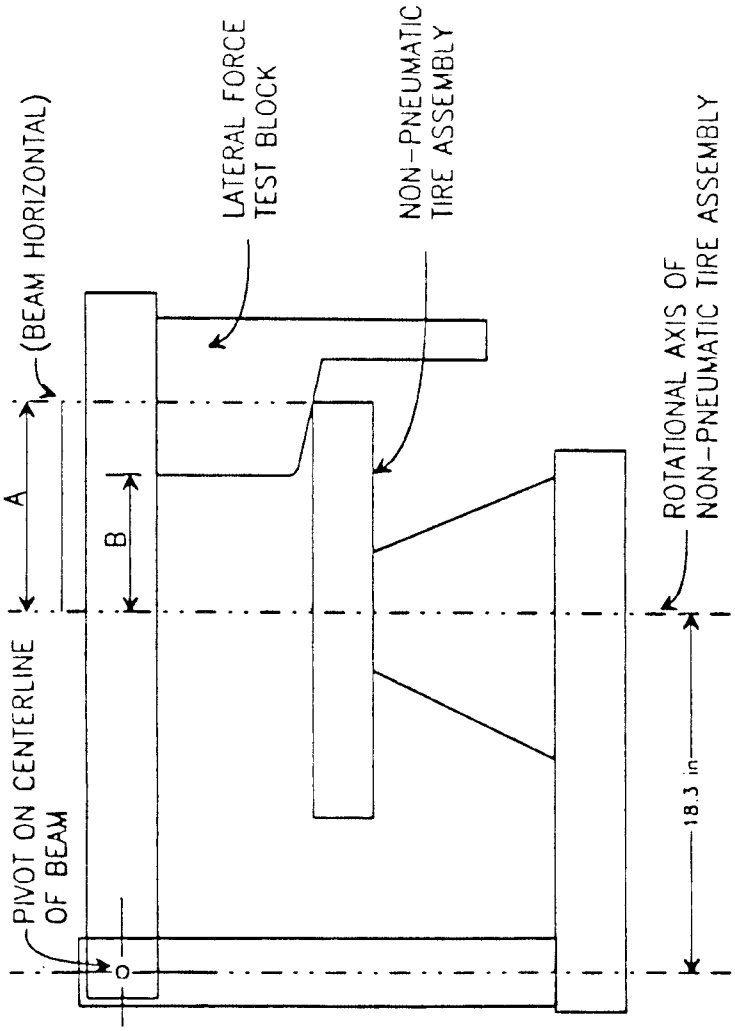

FIGURE 1 – LATERAL FORCE TEST FIXTURE (DIMENSIONS IN INCHES)

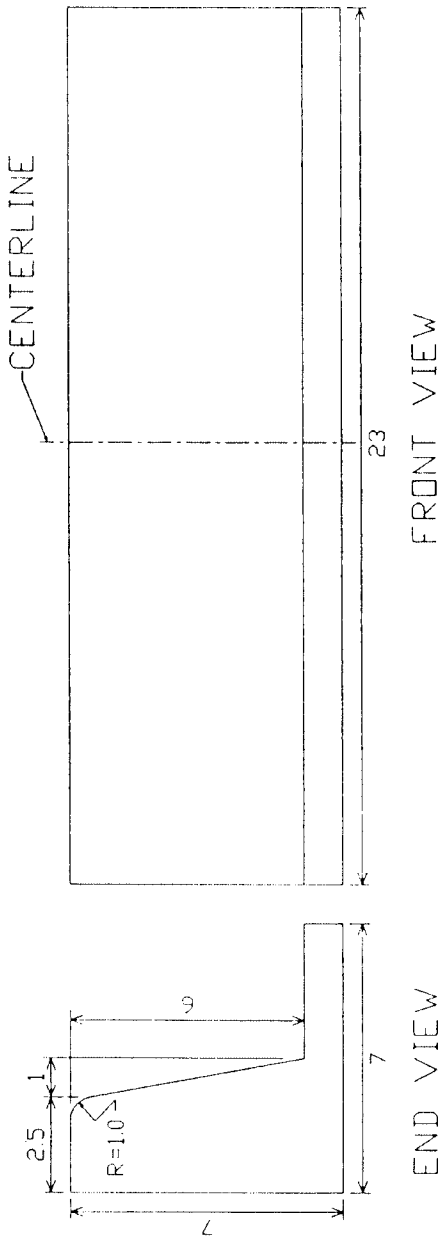

FIGURE 2 - LATERAL FORCE TEST BLOCK

DIMENSIONAL TOLERANCE IS +/- 0.050 INCH

DIMENSIONS ARE IN INCHES

[55 FR 29590, July 20, 1990, as amended at 56 FR 19312, Apr. 26, 1991]

§ 571.131 Standard No. 131; School bus pedestrian safety devices.

S1. *Scope.* This standard establishes requirements for devices that can be installed on school buses to improve the safety of pedestrians in the vicinity of stopped school buses.

S2. *Purpose.* The purpose of this standard is to reduce deaths and injuries by minimizing the likelihood of vehicles passing a stopped school bus and striking pedestrians in the vicinity of the bus.

S3. *Application.* This standard applies to school buses.

S4. *Definitions.*

Stop signal arm means a device that can be extended outward from the side of a school bus to provide a signal to other motorists not to pass the bus because it has stopped to load or discharge passengers.

S5. *Requirements.* Each school bus shall be equipped with a stop signal arm meeting the requirements of S5.1 through S5.5 as depicted in Figure 1.

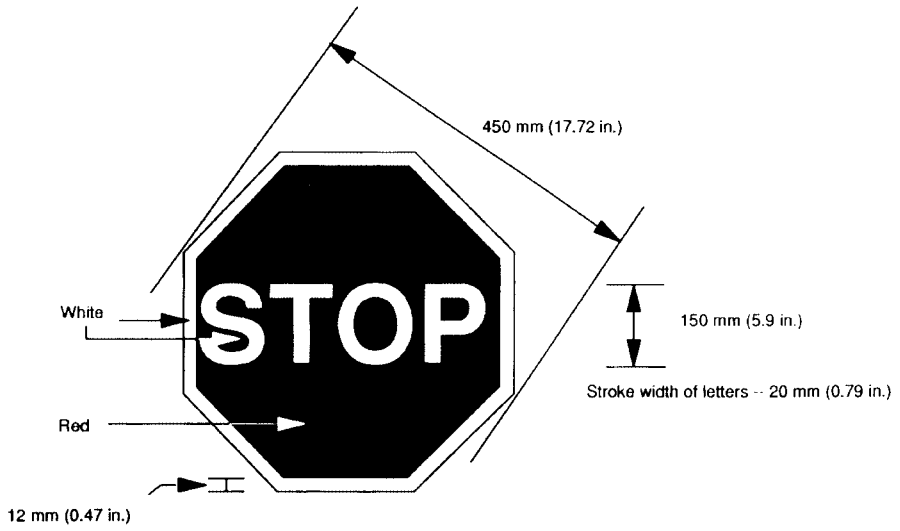

Figure 1. Characteristics of Stop Signal Device

S5.1 The stop signal arm shall be a regular octagon which is at least 450 mm×450 mm (17.72 inches×17.72 inches) in diameter.

S5.2 The stop signal arm shall be red on both sides, except as provided in S5.2.1 and S5.2.2, and S5.2.3.

S5.2.1 The stop signal arm shall have a white border at least 12 mm (0.47 inches) wide on both sides, except as provided in S5.2.3. Mounting brackets, clips, bolts, or other components necessary to the mechanical or electrical operation of the stop signal arm may not obscure more than 15 percent of the border on each side of the stop arm. The portion of the border that may be obscured is in addition to that portion which may be obscured by the two red lamps specified in S5.3.2.

S.5.2.2 The stop signal arm shall have the word ''STOP'' displayed in white upper-case letters on both sides, except as provided in S5.2.3. The letters shall be at least 150 mm (5.9 inches) in height. The letters shall have a stroke width of at least 20 mm (0.79 inches), except as provided in S.5.3.1.1.

S5.2.3 When two stop signal arms are installed on a school bus, the rearmost

stop signal arm shall not contain any lettering, symbols, or markings on the forward side.

S5.3 *Conspicuity*. The stop signal arm shall comply with either S5.3.1 or S5.3.2, or both.

S5.3.1 Except as provided in S5.3.1.1, S5.3.1.2, or S5.3.1.3, the entire surface of both sides of each stop signal arm shall be reflectorized with Type III retroreflectorized material that meets the minimum specific intensity requirements of S6.1 and Table I.

S.5.3.1.1 The legend of the retroreflective stop arm may be illuminated in a manner such that light is emitted from the surface of each letter or from the area immediately surrounding each letter. Only red lamps may be used. They shall form the complete shape of each letter of the legend, and shall be affixed to all letters (or to the areas immediately surrounding all letters) in the legend. The shape of each letter shall remain constant and, if the lamps are contained within each letter, the net stroke width (stroke width minus the width of the lamp(s)) of each letter of the legend, specified in S5.2.2, shall not be less than 15 mm (0.59 inch). When the stop arm is extended, the lamps shall flash at the rate specified in S6.2.2, with a current ''on'' time specified in S6.2.2.1. All lamps shall be positioned in one of the two following ways:

(1) centered within the stroke of each letter of the legend, or

(2) outlining each letter of the legend.

S5.3.1.2 Nonreflectorized mounting brackets, clips, bolts, or other components necessary to the mechanical or electrical operation of the stop signal arm shall not obscure more than 7.5 percent of the total surface area of either side of the stop signal arm.

S5.3.1.3 When two stop signal arms are installed on a school bus, the forward side of the rearmost stop signal arm shall not be reflectorized.

S5.3.2 Each side of the stop signal arm shall have at least two red lamps that meet the requirements of S6.2. The lamps shall be centered on the vertical centerline of the stop arm. One of the lamps shall be located at the extreme top of the stop arm and the other at its extreme bottom.

S5.4 The stop signal arm shall be installed on the left side of the bus.

S5.4.1 The stop signal arm shall be located such that, when in the extended position:

(a) The stop signal arm is perpendicular to the side of the bus, plus or minus five degrees;

(b) The top edge of the stop signal arm is parallel to and not more than 6 inches from a horizontal plane tangent to the lower edge of the frame of the passenger window immediately behind the driver's window; and

(c) The vertical centerline of the stop signal arm is not less than 9 inches away from the side of the school bus.

S5.4.2 A second stop signal arm may be installed on a school bus. That stop signal arm shall comply with S5.4 and S5.4.1.

S5.5 The stop signal arm shall be automatically extended in such a manner that it complies with S5.4.1, at a minimum whenever the red signal lamps required by S5.1.4 of Standard No. 108 are activated; except that a device may be installed that prevents the automatic extension of a stop signal arm. The mechanism for activating the device shall be within the reach of the driver. While the device is activated, a continuous or intermittent signal audible to the driver shall sound. The audible signal may be equipped with a timing device requiring the signal to sound for at least 60 seconds. If a timing device is used, it shall automatically recycle every time the service entry door is opened while the engine is running and the manual override is engaged.

S6 *Test Procedures*.

S6.1 *Reflectivity Test*. When tested under the conditions specified in S6.2 (b), (c), and (d) of Federal motor vehicle safety standard 125, Warning Devices, (49 CFR 571.125), the retroreflective materials shall meet the criteria specified in table 1.

TABLE 1—MINIMUM SPECIFIC INTENSITY PER UNIT AREA (SIA)

(Candelas per Footcandle Per Square Foot)

Observation Angle (°)	Entrance Angle (°)	White	Red
Type III Retroreflective Element Material			
A—Glass Bead Retroreflective Element Material			
0.2	−4	250	45

TABLE 1—MINIMUM SPECIFIC INTENSITY PER UNIT AREA (SIA)—Continued

(Candelas per Footcandle Per Square Foot)

Observation Angle (°)	Entrance Angle (°)	White	Red
0.2	+30	150	25
0.5	−4	95	15
0.5	+30	65	10
B—Prismatic Retroreflective Element Material			
0.2	−4	250	45
0.2	+30	95	13.3
0.5	−4	200	28
0.5	+30	65	10

S6.2 *Lighting Tests.*

S6.2.1 *Color.* The procedure shall be done in accordance with the Society of Automotive Engineers (SAE) J578, Color Specification (May 1988), 1990 SAE Handbook, Society of Automotive Engineers, Inc. Along with the incorporation by reference in S6.2.3, this incorporation by reference was approved by the Director of the Federal Register in accordance with 5 U.S.C. 552(a) and 1 CFR part 51. Copies may be obtained from the Society of Automotive Engineers, 400 Commonwealth Drive, Warrendale, PA 15096–0001. Copies may be inspected at Docket Room, National Highway Traffic Safety Administration, 400 Seventh Street, SW., Washington, DC 20590 or at the Office of the Federal Register, 800 North Capitol Street, NW., suite 700, Washington, DC. When visually compared to the light emitted from a filter/source with a combination of chromaticity coordinates as explained in SAE J578, Color Specification (May 1988), within specific boundaries [y=0.33 (yellow boundary) and y=0.98—×(purple boundary)] the color of light emitted from the test object shall not be less saturated (paler), yellower, or purpler. The test object shall be placed perpendicular to the light source to simulate lamps on stop signal arms. In making visual comparisons, the light from the test object shall light one portion of a comparison field and the light from the filter/source standard shall light an adjacent area. To make a valid visual comparison, the two fields to be viewed shall be of near equal luminance.

S6.2.2. *Flash rate.* The lamps on each side of the stop signal arm, when operated at the manufacturer's design load, shall flash alternately at a rate of 60 to 120 flashes per minute.

S6.2.2.1 Lamps, except those subject to S6.2.2.2, shall have a current ''on'' time of 30 to 75 percent of the total flash cycle. The total current ''on'' time for the two terminals shall be between 90 and 110 percent of the total flash cycle.

S6.2.2.2 Xenon short-arc gaseous discharge lamps shall have an ''off'' time before each flash of at least 50 percent of the total flash cycle.

S6.2.3 *Vibration, Moisture, Dust, Corrosion, Photometry, and Warpage Tests.* The procedure shall be done in accordance with the Society of Automotive Engineers (SAE) J575, Tests for Motor Vehicle Lighting Devices and Components, (July 1983) and Society of Automotive Engineers (SAE) J1133, School Bus Stop Arm, (April 1984), 1990 SAE Handbook, Society of Automotive Engineers, Inc. Lamps and lighting components shall meet the criteria for vibration, moisture, dust, corrosion, photometry, and warpage in SAE J575, Tests for Motor Vehicle Lighting Devices and Components, (July 1983) and SAE J1133, School Bus Stop Arm, (April 1984) under the test conditions specified herein.

[56 FR 20370, May 3, 1991, as amended at 57 FR 40134, Sept. 2, 1992; 59 FR 26761, May 24, 1994; 63 FR 29143, May 28, 1998]

§ 571.135 Standard No. 135; Passenger car brake systems.

S1. *Scope.* This standard specifies requirements for service brake and associated parking brake systems.

S2. *Purpose.* The purpose of this standard is to ensure safe braking performance under normal and emergency driving conditions.

S3. Application. This standard applies to passenger cars manufactured on or after September 1, 2000 and to multi-purpose passenger vehicles, trucks and buses with a gross vehicle weight rating (GVWR) of 3,500 kilograms (7,716 pounds) or less, manufactured on or after September 1, 2002. In addition, at the option of the manufacturer, passenger cars manufactured before September 1, 2000, and multi-purpose passenger vehicles, trucks and buses with a GVWR of 3,500 kilograms

(7,716 pounds) or less, manufactured before September 1, 2002, may meet the requirements of this standard instead of Federal Motor Vehicle No. 105, Hydraulic Brake Systems.

S4. *Definitions.*

Adhesion utilization curves means curves showing, for specified load conditions, the adhesion utilized by each axle of a vehicle plotted against the braking ratio of the vehicle.

Antilock brake system or *ABS* means a portion of a service brake system that automatically controls the degree of rotational wheel slip during braking by:

(1) Sensing the rate of angular rotation of the wheels;

(2) Transmitting signals regarding the rate of wheel angular rotation to one or more controlling devices which interpret those signals and generate responsive controlling output signals; and

(3) Transmitting those controlling signals to one or more modulator devices which adjust brake actuating forces in response to those signals.

Backup system means a portion of a service brake system, such as a pump, that automatically supplies energy in the event of a primary brake power source failure.

Brake factor means the slope of the linear least squares regression equation best representing the measured torque output of a brake as a function of the measured applied line pressure during a given brake application for which no wheel lockup occurs.

Brake hold-off pressure means the maximum applied line pressure for which no brake torque is developed, as predicted by the pressure axis intercept of the linear least squares regression equation best representing the measured torque output of a brake as a function of the measured applied line pressure during a given brake application.

Brake power assist unit means a device installed in a hydraulic brake system that reduces the amount of muscular force that a driver must apply to actuate the system, and that, if inoperative, does not prevent the driver from braking the vehicle by a continued application of muscular force on the service brake control.

Brake power unit means a device installed in a brake system that provides the energy required to actuate the brakes, either directly or indirectly through an auxiliary device, with driver action consisting only of modulating the energy application level.

Braking ratio means the deceleration of the vehicle divided by the gravitational acceleration constant.

Electric vehicle or *EV* means a motor vehicle that is powered by an electric motor drawing current from rechargeable storage batteries, fuel cells, or other portable sources of electrical current, and which may include a nonelectrical source of power designed to charge batteries and components thereof.

Electrically-actuated service brakes means service brakes that utilize electrical energy to actuate the foundation brakes.

Functional failure means a failure of a component (either electrical or mechanical in nature) which renders the system totally or partially inoperative yet the structural integrity of the system is maintained.

Hydraulic brake system means a system that uses hydraulic fluid as a medium for transmitting force from a service brake control to the service brake and that may incorporate a brake power assist unit, or a brake power unit.

Initial brake temperature or *IBT* means the average temperature of the service brakes on the hottest axle of the vehicle 0.32 km (0.2 miles) before any brake application.

Lightly loaded vehicle weight or *LLVW* means unloaded vehicle weight plus the weight of a mass of 180 kg (396 pounds), including driver and instrumentation.

Maximum speed of a vehicle or *VMax* means the highest speed attainable by accelerating at a maximum rate from a standing start for a distance of 3.2 km (2 miles) on a level surface, with the vehicle at its lightly loaded vehicle weight, and, if an EV, with the propulsion batteries at a state of charge of not less than 95 percent at the beginning of the run.

Objective brake factor means the arithmetic average of all the brake factors

measured over the twenty brake applications defined in S7.4, for all wheel positions having a given brake configuration.

Peak friction coefficient or *PFC* means the ratio of the maximum value of braking test wheel longitudinal force to the simultaneous vertical force occurring prior to wheel lockup, as the braking torque is progressively increased.

Pressure component means a brake system component that contains the brake system fluid and controls or senses the fluid pressure.

Regenerative braking system or *RBS* means an electrical energy system that is installed in an EV for recovering or dissipating kinetic energy, and which uses the propulsion motor(s) as a retarder for partial braking of the EV while returning electrical energy to the propulsion battery(s) or dissipating electrical energy.

Snub means the braking deceleration of a vehicle from a higher reference speed to a lower reference speed that is greater than zero.

Split service brake system means a brake system consisting of two or more subsystems actuated by a single control, designed so that a single failure in any subsystem (such as a leakage-type failure of a pressure component of a hydraulic subsystem except structural failure of a housing that is common to two or more subsystems, or an electrical failure in an electric subsystem) does not impair the operation of any other subsystem.

Stopping distance means the distance traveled by a vehicle from the point of application of force to the brake control to the point at which the vehicle reaches a full stop.

Variable brake proportioning system means a system that has one or more proportioning devices which automatically change the brake pressure ratio between any two or more wheels to compensate for changes in wheel loading due to static load changes and/or dynamic weight transfer, or due to deceleration.

Wheel lockup means 100 percent wheel slip.

S5. *Equipment requirements.*

S5.1. *Service brake system.* Each vehicle shall be equipped with a service brake system acting on all wheels.

S5.1.1. *Wear adjustment.* Wear of the service brakes shall be compensated for by means of a system of automatic adjustment.

S5.1.2. *Wear status.* The wear condition of all service brakes shall be indicated by either:

(a) Acoustic or optical devices warning the driver at his or her driving position when lining replacement is necessary, or

(b) A means of visually checking the degree of brake lining wear, from the outside or underside of the vehicle, utilizing only the tools or equipment normally supplied with the vehicle. The removal of wheels is permitted for this purpose.

S5.1.3 *Regenerative braking system.* (a) For an EV equipped with RBS, the RBS is considered to be part of the service brake system if it is automatically activated by an application of the service brake control, if there is no means provided for the driver to disconnect or otherwise deactivate it, and if it is activated in all transmission positions, including neutral.

(b) For an EV that is equipped with both ABS and RBS that is part of the service brake system, the ABS must control the RBS.

S5.2. *Parking brake system.* Each vehicle shall be equipped with a parking brake system of a friction type with solely mechanical means to retain engagement.

S5.3. *Controls.*

S5.3.1. The service brakes shall be activated by means of a foot control. The control of the parking brake shall be independent of the service brake control, and may be either a hand or foot control.

S5.3.2. For vehicles equipped with ABS, a control to manually disable the ABS, either fully or partially, is prohibited.

S5.4. *Reservoirs.*

S5.4.1. *Master cylinder reservoirs.* A master cylinder shall have a reservoir compartment for each service brake subsystem serviced by the master cylinder. Loss of fluid from one compartment shall not result in a complete

loss of brake fluid from another compartment.

S5.4.2. *Reservoir capacity*. Reservoirs, whether for master cylinders or other type systems, shall have a total minimum capacity equivalent to the fluid displacement resulting when all the wheel cylinders or caliper pistons serviced by the reservoirs move from a new lining, fully retracted position (as adjusted initially to the manufacturer's recommended setting) to a fully worn, fully applied position, as determined in accordance with S7.17(c) of this standard. Reservoirs shall have completely separate compartments for each subsystem except that in reservoir systems utilizing a portion of the reservoir for a common supply to two or more subsystems, individual partial compartments shall each have a minimum volume of fluid equal to at least the volume displaced by the master cylinder piston servicing the subsystem, during a full stroke of the piston. Each brake power unit reservoir servicing only the brake system shall have a minimum capacity equivalent to the fluid displacement required to charge the system piston(s) or accumulator(s) to normal operating pressure plus the displacement resulting when all the wheel cylinders or caliper pistons serviced by the reservoir or accumulator(s) move from a new lining, fully retracted position (as adjusted initially to the manufacturer's recommended setting) to a fully worn, fully applied position.

S5.4.3. *Reservoir labeling*. Each vehicle equipped with hydraulic brakes shall have a brake fluid warning statement that reads as follows, in letters at least 3.2 mm (⅛ inch) high: ''WARNING: Clean filler cap before removing. Use only _____ fluid from a sealed container.'' (Inserting the recommended type of brake fluid as specified in 49 CFR 571.116, *e.g.*, ''DOT 3.'') The lettering shall be:

(a) Permanently affixed, engraved or embossed;

(b) Located so as to be visible by direct view, either on or within 100 mm (3.94 inches) of the brake fluid reservoir filler plug or cap; and

(c) Of a color that contrasts with its background, if it is not engraved or embossed.

S5.4.4. *Fluid level indication*. Brake fluid reservoirs shall be so constructed that the level of fluid can be checked without need for the reservoir to be opened. This requirement is deemed to have been met if the vehicle is equipped with a transparent brake fluid reservoir or a brake fluid level indicator meeting the requirements of S5.5.1(a)(1).

S5.5. *Brake system warning indicator*. Each vehicle shall have one or more visual brake system warning indicators, mounted in front of and in clear view of the driver, which meet the requirements of S5.5.1 through S5.5.5. In addition, a vehicle manufactured without a split service brake system shall be equipped with an audible warning signal that activates under the conditions specified in S5.5.1(a).

S5.5.1. *Activation*. An indicator shall be activated when the ignition (start) switch is in the ''on'' (''run'') position and whenever any of conditions (a) through (g) occur:

(a) A gross loss of fluid or fluid pressure (such as caused by rupture of a brake line but not by a structural failure of a housing that is common to two or more subsystems) as indicated by one of the following conditions (chosen at the option of the manufacturer):

(1) A drop in the level of the brake fluid in any master cylinder reservoir compartment to less than the recommended safe level specified by the manufacturer or to one-fourth of the fluid capacity of that reservoir compartment, whichever is greater.

(2) For vehicles equipped with a split service brake system, a differential pressure of 1.5 MPa (218 psi) between the intact and failed brake subsystems measured at a master cylinder outlet or a slave cylinder outlet.

(3) A drop in the supply pressure in a brake power unit to one-half of the normal system pressure.

(b) Any electrical functional failure in an antilock or variable brake proportioning system.

(c) Application of the parking brake.

(d) Brake lining wear-out, if the manufacturer has elected to use an electrical device to provide an optical warning to meet the requirements of S5.1.2(a).

(e) For a vehicle with electrically-actuated service brakes, failure of the source of electric power to those brakes, or diminution of state of charge of the batteries to less than a level specified by the manufacturer for the purpose of warning a driver of degraded brake performance.

(f) For a vehicle with electric transmission of the service brake control signal, failure of a brake control circuit.

(g) For an EV with a regenerative braking system that is part of the service brake system, failure of the RBS.

S5.5.2. *Function check.* (a) All indicators shall be activated as a check function by either:

(1) Automatic activation when the ignition (start) switch is turned to the ''on'' (''run'') position when the engine is not running, or when the ignition (''start'') switch is in a position between ''on'' (''run'') and ''start'' that is designated by the manufacturer as a check position, or

(2) A single manual action by the driver, such as momentary activation of a test button or switch mounted on the instrument panel in front of and in clear view of the driver, or, in the case of an indicator for application of the parking brake, by applying the parking brake when the ignition is in the ''on'' (''run'') position.

(b) In the case of a vehicle that has an interlock device that prevents the engine from being started under one or more conditions, check functions meeting the requirements of S5.5.2(a) need not be operational under any condition in which the engine cannot be started.

(c) The manufacturer shall explain the brake check function test procedure in the owner's manual.

S5.5.3. *Duration.* Each indicator activated due to a condition specified in S5.5.1 shall remain activated as long as the condition exists, whenever the ignition (''start'') switch is in the ''on'' (''run'') position, whether or not the engine is running.

S5.5.4. *Function.* When a visual warning indicator is activated, it may be continuous or flashing, except that the visual warning indicator on a vehicle not equipped with a split service brake system shall be flashing. The audible warning required for a vehicle manufactured without a split service brake system may be continuous or intermittent.

S5.5.5. *Labeling.* (a) Each visual indicator shall display a word or words in accordance with the requirements of Standard No. 101 (49 CFR 571.101) and this section, which shall be legible to the driver under all daytime and nighttime conditions when activated. Unless otherwise specified, the words shall have letters not less than 3.2 mm (⅛ inch) high and the letters and background shall be of contrasting colors, one of which is red. Words or symbols in addition to those required by Standard No. 101 and this section may be provided for purposes of clarity.

(b) Vehicles manufactured with a split service brake system may use a common brake warning indicator to indicate two or more of the functions described in S5.5.1(a) through S5.5.1(d). If a common indicator is used, it shall display the word ''Brake.''

(c) A vehicle manufactured without a split service brake system shall use a separate indicator to indicate the failure condition in S5.5.1(a). This indicator shall display the words ''STOP—BRAKE FAILURE'' in block capital letters not less than 6.4 mm (¼ inch) in height.

(d) If separate indicators are used for one or more of the conditions described in S5.5.1(a) through S5.5.1(g), the indicators shall display the following wording:

(1) If a separate indicator is provided for the low brake fluid condition in S5.5.1(a)(1), the words ''Brake Fluid'' shall be used except for vehicles using hydraulic system mineral oil.

(2) If a separate indicator is provided for the gross loss of pressure condition in S5.5.1(a)(2), the words ''Brake Pressure'' shall be used.

(3) If a separate indicator is provided for the condition specified in S5.5.1(b), the letters and background shall be of contrasting colors, one of which is yellow. The indicator shall be labeled with the words ''Antilock'' or ''Anti-lock'' or ''ABS''; or ''Brake Proportioning,'' in accordance with Table 2 of Standard No. 101.

(4) If a separate indicator is provided for application of the parking brake as specified for S5.5.1(c), the single word

''Park'' or the words ''Parking Brake'' may be used.

(5) If a separate indicator is provided to indicate brake lining wear-out as specified in S5.5.1(d), the words ''Brake Wear'' shall be used.

(6) If a separate indicator is provided for the condition specified in S5.5.1(g), the letters and background shall be of contrasting colors, one of which is yellow. The indicator shall be labeled with the symbol ''RBS.'' RBS failure in a system that is part of the service brake system may also be indicated by a yellow lamp that also indicates ''ABS'' failure and displays the symbol ''ABS/RBS.''

(7) If a separate indicator is provided for any other function, the display shall include the word ''Brake'' and the appropriate additional labeling.

S5.6. *Brake system integrity*. Each vehicle shall meet the complete performance requirements of this standard without:

(a) Detachment or fracture of any component of the braking system, such as brake springs and brake shoes or disc pad facings other than minor cracks that do not impair attachment of the friction facings. All mechanical components of the braking system shall be intact and functional. Friction facing tearout (complete detachment of lining) shall not exceed 10 percent of the lining on any single frictional element.

(b) Any visible brake fluid or lubricant on the friction surface of the brake, or leakage at the master cylinder or brake power unit reservoir cover, seal, and filler openings.

S6. *General test conditions*. Each vehicle must meet the performance requirements specified in S7 under the following test conditions and in accordance with the test procedures and test sequence specified. Where a range of conditions is specified, the vehicle must meet the requirements at all points within the range.

S6.1. *Ambient conditions*.

S6.1.1. *Ambient temperature*. The ambient temperature is any temperature between 0 °C (32 °F) and 40 °C (104 °F).

S6.1.2. *Wind speed*. The wind speed is not greater than 5 m/s (11.2 mph).

S6.2. *Road test surface*.

S6.2.1. *Pavement friction*. Unless otherwise specified, the road test surface produces a peak friction coefficient (PFC) of 0.9 when measured using an American Society for Testing and Materials (ASTM) E1136 standard reference test tire, in accordance with ASTM Method E 1337–90, at a speed of 64.4 km/h (40 mph), without water delivery.

S6.2.2. *Gradient*. Except for the parking brake gradient holding test, the test surface has no more than a 1% gradient in the direction of testing and no more than a 2% gradient perpendicular to the direction of testing.

S6.2.3. *Lane width*. Road tests are conducted on a test lane 3.5 m (11.5 ft) wide.

S6.3. *Vehicle conditions*.

S6.3.1. *Vehicle weight*.

S6.3.1.1. For the tests at GVWR, the vehicle is loaded to its GVWR such that the weight on each axle as measured at the tire-ground interface is in proportion to its GAWR, with the fuel tank filled to 100% of capacity. However, if the weight on any axle of a vehicle at LLVW exceeds the axle's proportional share of the GVWR, the load required to reach GVWR is placed so that the weight on that axle remains the same as at LLVW.

S6.3.1.2. For the test at LLVW, the vehicle is loaded to its LLVW such that the added weight is distributed in the front passenger seat area.

S6.3.2. *Fuel tank loading*. The fuel tank is filled to 100% of capacity at the beginning of testing and may not be less than 75% of capacity during any part of the testing.

S6.3.3. *Lining preparation*. At the beginning of preparation for the road tests, the brakes of the vehicle are in the same condition as when the vehicle was manufactured. No burnishing or other special preparation is allowed, unless all vehicles sold to the public are similarly prepared as a part of the manufacturing process.

S6.3.4. *Adjustments and repairs*. These requirements must be met without replacing any brake system parts or making any adjustments to the brake system except as specified in this standard. Where brake adjustments are

specified (S7.1.3), adjust the brakes, including the parking brakes, in accordance with the manufacturer's recommendation. No brake adjustments are allowed during or between subsequent tests in the test sequence.

S6.3.5. *Automatic brake adjusters.* Automatic adjusters are operational throughout the entire test sequence. They may be adjusted either manually or by other means, as recommended by the manufacturer, only prior to the beginning of the road test sequence.

S6.3.6. *Antilock brake system (ABS).* If a car is equipped with an ABS, the ABS is fully operational for all tests, except where specified in the following sections.

S6.3.7. *Variable brake proportioning valve.* If a car is equipped with a variable brake proportioning system, the proportioning valve is fully operational for all tests except the test for failed variable brake proportioning system.

S6.3.8. *Tire inflation pressure.* Tires are inflated to the pressure recommended by the vehicle manufacturer for the GVWR of the vehicle.

S6.3.9. *Engine.* Engine idle speed and ignition timing are set according to the manufacturer's recommendations. If the vehicle is equipped with an adjustable engine speed governor, it is adjusted according to the manufacturer's recommendations.

S6.3.10. *Vehicle openings.* All vehicle openings (doors, windows, hood, trunk, convertible top, cargo doors, etc.) are closed except as required for instrumentation purposes.

S6.3.11 *State of charge of batteries for EVs.*

S6.3.11.1 The state of charge of the propulsion batteries is determined in accordance with SAE Recommended Practice J227a, *Electric Vehicle Test Procedure,* February 1976. The applicable sections of J227a are 3.2.1 through 3.2.4, 3.3.1 through 3.3.2.2, 3.4.1 and 3.4.2, 4.2.1, 5.2, 5.2.1 and 5.3.

S6.3.11.2 At the beginning of the burnish procedure (S7.1 of this standard) in the test sequence, each propulsion battery is at the maximum state of charge recommended by the manufacturer, as stated in the vehicle operator's manual or on a label that is permanently attached to the vehicle, of, if the manufacturer has made no recommendation, not less than 95 percent. During the 200-stop burnish procedure, the propulsion batteries are restored to the maximum state of charge determined as above, after each increment of 40 burnish stops until the burnish procedure is complete. The batteries may be charged at a more frequent interval during a particular 40-stop increment only if the EV is incapable of achieving the initial burnish test speed during that increment. During the burnish procedure, the propulsion batteries may be charged by external means or replaced by batteries that are at a state of charge of not less than 95 percent. For an EV having a manual control for setting the level of regenerative braking, the manual control, at the beginning of the burnish procedure, is set to provide maximum regenerative braking throughout the burnish.

S6.3.11.3 At the beginning of each performance test in the test sequence (S7.2 through S7.17 of this standard), unless otherwise specified, an EV's propulsion batteries are at the state of charge recommended by the manufacturer, as stated in the vehicle operator's manual or on a label that is permanently attached to the vehicle, or, if the manufacturer has made no recommendation, at a state of charge of not less than 95 percent. No further charging of any propulsion battery occurs during any of the performance tests in the test sequence of this standard. If the propulsion batteries are depleted during a test sequence such that the vehicle reaches automatic shut-down, will not accelerate, or the low state of charge brake warning lamp is illuminated, the vehicle is to be accelerated to brake test speed by auxiliary means. If a battery is replaced rather than recharged, the replacement battery shall be charged and measured for state of charge in accordance with these procedures.

S6.3.12 *State of charge of batteries for electrically-actuated service brakes.* A vehicle equipped with electrically-actuated service brakes also performs the following test series. Conduct 10 stopping tests from a speed of 100 kph or the maximum vehicle speed, whichever is less. At least two of the 10 stopping distances must be less than or equal to 70 meters. The vehicle is loaded to

GVWR and the transmission is in the neutral position when the service brake control is actuated and throughout the remainder of the test. Each battery providing power to the electrically-actuated service brakes, shall be in a depleted state of charge for conditions (a), (b), or (c) of this paragraph as appropriate. An auxiliary means may be used to accelerate an EV to test speed.

(a) For an EV equipped with electrically-actuated service brakes deriving power from the propulsion batteries and with automatic shut-down capability of the propulsion motor(s), the propulsion batteries are at not more than five percent above the EV actual automatic shut-down critical value. The critical value is determined by measuring the state-of-charge of each propulsion battery at the instant that automatic shut-down occurs.

(b) For an EV equipped with electrically-actuated service brakes deriving power from the propulsion batteries and with no automatic shut-down capability of the propulsion motor(s), the propulsion batteries are at an average of not more than five percent above the actual state of charge at which the brake failure warning signal, required by S5.5.1(e) of this standard, is illuminated.

(c) For a vehicle which has one or more auxiliary batteries that provides electrical energy to operate the electrically-actuated service brakes, each auxiliary battery is at not more than five percent above the actual state of charge at which the brake failure warning signal, required by S5.5.1(e) of this standard, is illuminated.

S6.3.13 *Electric vehicles.*

S6.3.13.1 (a) For an EV equipped with an RBS that is part of the service brake system, the RBS is operational during the burnish and all tests, except for the test of a failed RBS.

(b) For an EV equipped with an RBS that is not part of the service brake system, the RBS is operational and set to produce the maximum regenerative braking effect during the burnish, and is disabled during the test procedures. If the vehicle is equipped with a neutral gear that automatically disables the RBS, the test procedures which are designated to be conducted in gear may be conducted in neutral.

S6.3.13.2 For tests conducted ''in neutral'', the operator of an EV with no ''neutral'' position (or other means such as a clutch for disconnecting the drive train from the propulsion motor(s)) does not apply any electromotive force to the propulsion motor(s). Any electromotive force that is applied to the propulsion motor(s) automatically remains in effect unless otherwise specified by the test procedure.

S6.4. *Instrumentation.*

S6.4.1. *Brake temperature measurement.* The brake temperature is measured by plug-type thermocouples installed in the approximate center of the facing length and width of the most heavily loaded shoe or disc pad, one per brake, as shown in Figure 1. A second thermocouple may be installed at the beginning of the test sequence if the lining wear is expected to reach a point causing the first thermocouple to contact the metal rubbing surface of a drum or rotor. For center-grooved shoes or pads, thermocouples are installed within 3 mm (.12 in) to 6 mm (.24 in) of the groove and as close to the center as possible.

S6.4.2. *Brake line pressure measurement for the torque wheel test.* The vehicle shall be fitted with pressure transducers in each hydraulic circuit. On hydraulically proportioned circuits, the pressure transducer shall be downstream of the operative proportioning valve.

S6.4.3. *Brake torque measurement for the torque wheel test.* The vehicle shall be fitted with torque wheels at each wheel position, including slip ring assemblies and wheel speed indicators to permit wheel lock to be detected.

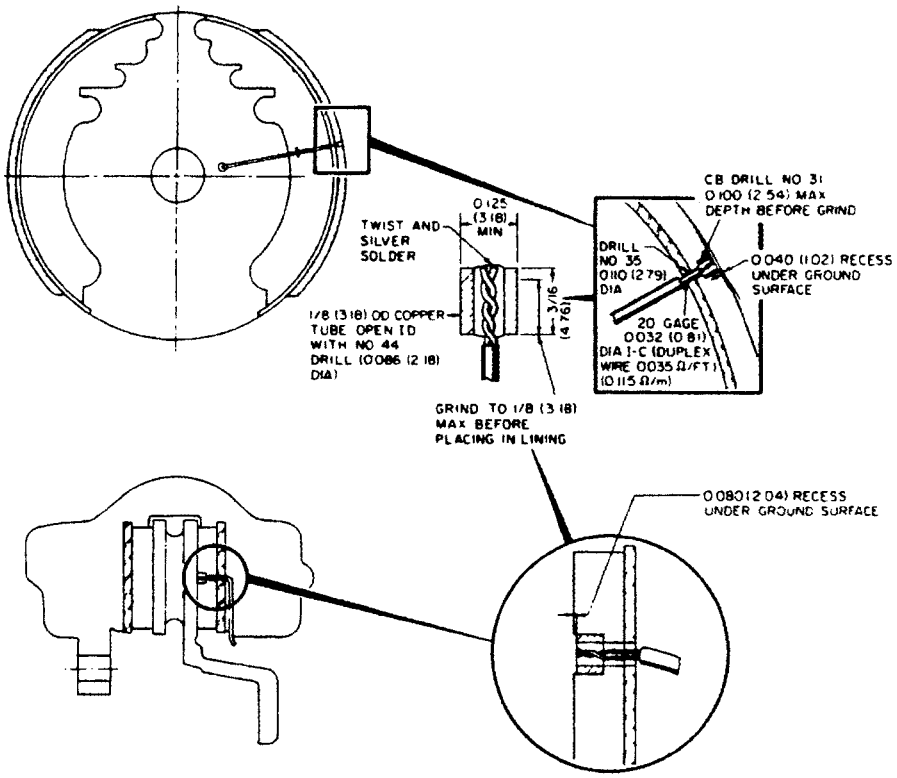

DIMENSIONS ARE IN (mm)

Figure 1–Typical Plug-Type Thermocouple Installations

S6.5. *Procedural conditions.*

S6.5.1. *Brake control.* All service brake system performance requirements, including the partial system requirements of S7.7, S7.10 and S7.11, must be met solely by use of the service brake control.

S6.5.2. *Test speeds.* If a vehicle is incapable of attaining the specified normal test speed, it is tested at a speed that is a multiple of 5 km/h (3.1 mph) that is 4 to 8 km/h (2.5 to 5.0 mph) less than its maximum speed and its performance must be within a stopping distance given by the formula provided for the specific requirement.

S6.5.3. *Stopping distance.*

S6.5.3.1. The braking performance of a vehicle is determined by measuring the stopping distance from a given initial speed.

S6.5.3.2. Unless otherwise specified, the vehicle is stopped in the shortest distance achievable (best effort) on all stops. Where more than one stop is required for a given set of test conditions, a vehicle is deemed to comply with the corresponding stopping distance requirements if at least one of the stops is made within the prescribed distance.

S6.5.3.3. In the stopping distance formulas given for each applicable test (such as $S \leq 0.10V + 0.0060V^2$), S is the maximum stopping distance in meters, and V is the test speed in km/h.

S6.5.4. *Vehicle position and attitude.*

S6.5.4.1. The vehicle is aligned in the center of the lane at the start of each brake application. Steering corrections are permitted during each stop.

S6.5.4.2. Stops are made without any part of the vehicle leaving the lane and without rotation of the vehicle about its vertical axis of more than ±15° from the center line of the test lane at any time during any stop.

S6.5.5. *Transmission selector control.*

S6.5.5.1. For tests in neutral, a stop or snub is made in accordance with the following procedures:

(a) Exceed the test speed by 6 to 12 km/h (3.7 to 7.5 mph);

(b) Close the throttle and coast in gear to approximately 3 km/h (1.9 mph) above the test speed;

(c) Shift to neutral; and

(d) When the test speed is reached, apply the brakes.

S6.5.5.2. For tests in gear, a stop or snub is made in accordance with the following procedures:

(a) With the transmission selector in the control position recommended by the manufacturer for driving on a level surface at the applicable test speed, exceed the test speed by 6 to 12 km/h (3.7 to 7.5 mph);

(b) Close the throttle and coast in gear; and

(c) When the test speed is reached apply the brakes.

(d) To avoid engine stall, a manual transmission may be shifted to neutral (or the clutch disengaged) when the vehicle speed is below 30 km/h (18.6 mph).

S6.5.6. *Initial brake temperature (IBT).* If the lower limit of the specified IBT for the first stop in a test sequence (other than a parking brake grade holding test) has not been reached, the brakes are heated to the IBT by making one or more brake applications from a speed of 50 km/h (31.1 mph), at a deceleration rate not greater than 3 m/s^2 (9.8 fps^2).

S7. *Road test procedures and performance requirements.* Each vehicle shall meet all the applicable requirements of this section, when tested according to the conditions and procedures set forth below and in S6, in the sequence specified in Table 1:

TABLE 1.—ROAD TEST SEQUENCE

Testing order	Section No.
Vehicle loaded to GVWR:	
1 Burnish	S7.1
2 Wheel lock sequence	S7.2
Vehicle loaded to LLVW:	
3 Wheel lock sequence	S7.2
4 ABS performance	S7.3
5 Torque wheel	S7.4
Vehicle loaded to GVWR:	
6 Torque wheel	S7.4
7 Cold effectiveness	S7.5
8 High speed effectiveness	S7.6
9 Stops with engine off	S7.7
Vehicle loaded to LLVW:	
10 Cold effectiveness	S7.5
11 High speed effectiveness	S7.6
12 Failed antilock	S7.8
13 Failed proportioning valve	S7.9
14 Hydraulic circuit failure	S7.10
Vehicle loaded to GVWR:	
15 Hydraulic circuit failure	S7.10
16 Failed antilock	S7.8
17 Failed proportioning valve	S7.9
18 Power brake unit failure	S7.11
19 Parking brake	S7.12
20 Heating Snubs	S7.13
21 Hot Performance	S7.14
22 Brake cooling	S7.15
23 Recovery Performance	S7.16
24 Final Inspection	S7.17

S7.1. *Burnish.*

S7.1.1. *General information.* Any pretest instrumentation checks are conducted as part of the burnish procedure, including any necessary rechecks after instrumentation repair, replacement or adjustment. Instrumentation check test conditions must be in accordance with the burnish test procedure specified in S7.1.2 and S7.1.3.

S7.1.2. *Vehicle conditions.* (a) Vehicle load: GVWR only.

(b) Transmission position: In gear.

S7.1.3. *Test conditions and procedures.* The road test surface conditions specified in S6.2 do not apply to the burnish procedure.

(a) IBT: ≤100 °C (212 °F).

(b) Test speed: 80 km/h (49.7 mph).

(c) Pedal force: Adjust as necessary to maintain specified constant deceleration rate.

(d) Deceleration rate: Maintain a constant deceleration rate of 3.0 m/s^2 (9.8 fps^2).

(e) Wheel lockup: No lockup of any wheel allowed for longer than 0.1 seconds at speeds greater than 15 km/h (9.3 mph).

(f) Number of runs: 200 stops.

(g) Interval between runs: The interval from the start of one service brake application to the start of the next is either the time necessary to reduce the IBT to 100 °C (212 °F) or less, or the distance of 2 km (1.24 miles), whichever occurs first.

(h) Accelerate to 80 km/h (49.7 mph) after each stop and maintain that speed until making the next stop.

(i) After burnishing, adjust the brakes as specified in S6.3.4.

S7.2 *Wheel lockup sequence.*

S7.2.1 *General information.* (a) The purpose of this test is to ensure that lockup of both front wheels occurs either simultaneously with, or at a lower deceleration rate than, the lockup of both rear wheels, when tested on road surfaces affording adhesion such that wheel lockup of the first axle occurs at a braking ratio of between 0.15 and 0.80, inclusive.

(b) This test is for vehicles without antilock brake systems.

(c) This wheel lock sequence test is to be used as a screening test to evaluate a vehicle's axle lockup sequence and to determine whether the torque wheel test in S7.4 must be conducted.

(d) For this test, a simultaneous lockup of the front and rear wheels refers to the conditions when the time interval between the first occurrence of lockup of the last (second) wheel on the rear axle and the first occurrence of lockup of the last (second) wheel on the front axle is ≤ 0.1 second for vehicle speeds > 15 km/h (9.3 mph).

(e) A front or rear axle lockup is defined as the point in time when the last (second) wheel on an axle locks up.

(f) Vehicles that lock their front axle simultaneously or at lower deceleration rates than their rear axle need not be tested to the torque wheel procedure.

(g) Vehicles which lock their rear axle at deceleration rates lower than the front axle shall also be tested in accordance with the torque wheel procedure in S7.4.

(h) Any determination of noncompliance for failing adhesion utilization requirements shall be based on torque wheel test results.

S7.2.2 *Vehicle conditions.* (a) Vehicle load: GVWR and LLVW.

(b) Transmission position: In neutral.

S7.2.3. *Test Conditions and Procedures.* (a) IBT: ≤65 °C (149 °F), ≤100 °C (212 °F).

(b) Test speed: 65 km/h (40.4 mph) for a braking ratio ≤ 0.50; 100 km/h (62.1 mph) for a braking ratio > 0.50.

(c) Pedal force:

(1) Pedal force is applied and controlled by the vehicle driver or by a mechanical brake pedal actuator.

(2) Pedal force is increased at a linear rate such that the first axle lockup occurs no less than one-half (0.5) second and no more than one and one-half (1.5) seconds after the initial application of the pedal.

(3) The pedal is released when the second axle locks, or when the pedal force reaches 1kN (225 lbs), or 0.1 seconds after first axle lockup, whichever occurs first.

(d) Wheel lockup: Only wheel lockups above a vehicle speed of 15 km/h (9.3 mph) are considered in determining the results of this test.

(e) Test surfaces: This test is conducted, for each loading condition, on two different test surfaces that will result in a braking ratio of between 0.15 and 0.80, inclusive. NHTSA reserves the right to choose the test surfaces to be used based on adhesion utilization curves or any other method of determining ''worst case'' conditions.

(f) The data recording equipment shall have a minimum sampling rate of 40 Hz.

(g) Data to be recorded. The following information must be automatically recorded in phase continuously throughout each test run such that values of the variables can be cross referenced in real time.

(1) Vehicle speed.

(2) Brake pedal force.

(3) Angular velocity at each wheel.

(4) Actual instantaneous vehicle deceleration or the deceleration calculated by differentiation of the vehicle speed.

(h) Speed channel filtration. For analog instrumentation, the speed channel shall be filtered by using a low-pass filter having a cut-off frequency of less than one fourth the sampling rate.

(i) Test procedure. For each test surface, three runs meeting the pedal force application and time for wheel lockup requirements shall be made. Up to a total of six runs will be allowed to obtain three valid runs. Only the first three valid runs obtained shall be used for data analysis purposes.

S7.2.4. *Performance requirements.* (a) In order to pass this test a vehicle shall be capable of meeting the test requirements on all test surfaces that will result in a braking ratio of between 0.15 and 0.80, inclusive.

(b) If all three valid runs on each surface result in the front axle locking before or simultaneously with the rear axle, or the front axle locks up with only one or no wheels locking on the rear axle, the torque wheel procedure need not be run, and the vehicle is considered to meet the adhesion utilization requirements of this Standard. This performance requirement shall be met for all vehicle braking ratios between 0.15 and 0.80.

(c) If any one of the three valid runs on any surface results in the rear axle locking before the front axle or the rear axle locks up with only one or no wheels locking on the front axle the torque wheel procedure shall be performed. This performance requirement shall be met for all vehicle braking ratios between 0.15 and 0.80.

(d) If any one of the three valid runs on any surface results in neither axle locking (i.e., only one or no wheels locked on each axle) before a pedal force of 1kN (225 lbs) is reached, the vehicle shall be tested to the torque wheel procedure.

(e) If the conditions listed in paragraph (c) or (d) of this section occur, vehicle compliance shall be determined from the results of a torquesults of a torque wheel test performed in accordance with S7.4.

(f) An EV with RBS that is part of the service brake system shall meet the performance requirements over the entire normal operating range of the RBS.

S7.3. *ABS performance.* [Reserved]

S7.4. *Adhesion utilization (Torque Wheel Method).*

S7.4.1. *General information.* This test is for vehicles without any ABS. The purpose of the test is to determine the adhesion utilization of a vehicle.

S7.4.2. *Vehicle conditions.* (a) Vehicle load: GVWR and LLVW.

(b) Transmission position: In neutral.

(c) Tires: For this test, a separate set of tires, identical to those used for all other tests under Section 7.0, may be used.

S7.4.3. *Test conditions and procedures.* (a) IBT: ≤65 °C (149 °F), ≤100 °C (212 °F).

(b) Test speeds: 100 km/h (62.1 mph), and 50 km/h (31.1 mph).

(c) Pedal force: Pedal force is increased at a linear rate between 100 and 150 N/sec (22.5 and 33.7 lbs/sec) for the 100 km/h test speed, or between 100 and 200 N/sec (22.5 and 45.0 lbs/sec) for the 50 km/h test speed, until the first axle locks or until a pedal force of 1 kN (225 lbs) is reached, whichever occurs first.

(d) Cooling: Between brake applications, the vehicle is driven at speeds up to 100 km/h (62.1 mph) until the IBT specified in S7.4.3(a) is reached.

(e) Number of runs: With the vehicle at LLVW, run five stops from a speed of 100 km/h (62.1 mph) and five stops from a speed of 50 km/h (31.1 mph), while alternating between the two test speeds after each stop. With the vehicle at GVWR, repeat the five stops at each test speed while alternating between the two test speeds.

(f) Test surface: PFC of at least 0.9.

(g) Data to be recorded. The following information must be automatically recorded in phase continuously throughout each test run such that values of the variables can be cross referenced in real time:

(1) Vehicle speed.

(2) Brake pedal force.

(3) Angular velocity at each wheel.

(4) Brake torque at each wheel.

(5) Hydraulic brake line pressure in each brake circuit. Hydraulically proportioned circuits shall be fitted with transducers on at least one front wheel and one rear wheel downstream of the operative proportioning or pressure limiting valve(s).

(6) Vehicle deceleration.

(h) Sample rate: All data acquisition and recording equipment shall support a minimum sample rate of 40 Hz on all channels.

(i) Determination of front versus rear brake pressure. Determine the front

versus rear brake pressure relationship over the entire range of line pressures. Unless the vehicle has a variable brake proportioning system, this determination is made by static test. If the vehicle has a variable brake proportioning system, dynamic tests are run with the vehicle both empty and loaded. 15 snubs from 50 km/h (31.1 mph) are made for each of the two load conditions, using the same initial conditions specified in this section.

S7.4.4. *Data reduction*. (a) The data from each brake application under S7.4.3 is filtered using a five-point, on-center moving average for each data channel.

(b) For each brake application under S7.4.3 determine the slope (brake factor) and pressure axis intercept (brake hold-off pressure) of the linear least squares equation best describing the measured torque output at each braked wheel as a function of measured line pressure applied at the same wheel. Only torque output values obtained from data collected when the vehicle deceleration is within the range of 0.15g to 0.80g are used in the regression analysis.

(c) Average the results of paragraph (b) of this section to calculate the average brake factor and brake hold-off pressure for all brake applications for the front axle.

(d) Average the results of paragraph (b) of this section to calculate the average brake factor and brake hold-off pressure for all brake applications for the rear axle.

(e) Using the relationship between front and rear brake line pressure determined in S7.4.3(i) and the tire rolling radius, calculate the braking force at each axle as a function of front brake line pressure.

(f) Calculate the braking ratio of the vehicle as a function of the front brake line pressure using the following equation:

$$z = \frac{T_1 + T_2}{P}$$

where z = braking ratio at a given front line pressure;

T_1, T_2 = Braking forces at the front and rear axles, respectively, corresponding to the same front brake line pressure, and

P = total vehicle weight.

(g) Calculate the adhesion utilized at each axle as a function of braking ratio using the following equations:

$$f_1 = \frac{T_1}{P_1 + zhP / E}$$

$$f_2 = \frac{T_2}{P_2 - zhP / E}$$

where f_i = adhesion utilized by axle i

T_i = braking force at axle i (from (e))

P_i = static weight on axle i

i = 1 for the front axle, or 2 for the rear axle

z = braking ratio (from (f))

h = height of center of gravity of the vehicle

P = total vehicle weight

E = wheelbase

(h) Plot f_1 and f_2 obtained in (g) as a function of z, for both GVWR and LLVW load conditions. These are the adhesion utilization curves for the vehicle, which are compared to the performance requirements in S7.4.5. shown graphically in Figure 2:

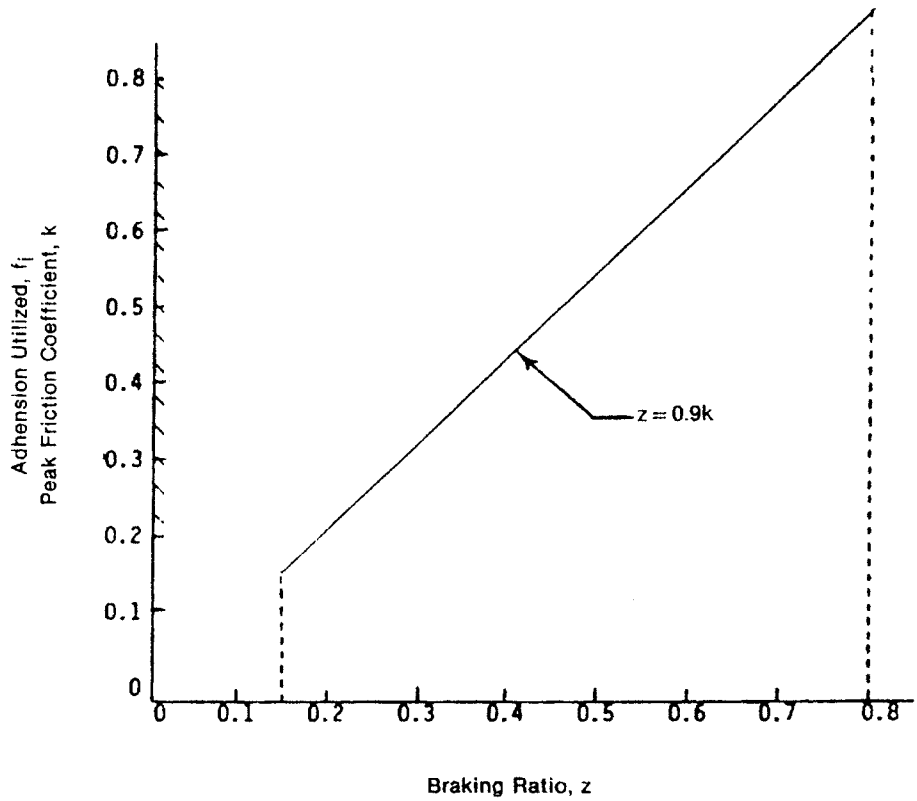

Figure 2-Adhesion Utilization Requirements

S7.4.5. *Performance requirements.* For all braking ratios between 0.15 and 0.80, each adhesion utilization curve for a rear axle shall be situated below a line defined by z=0.9k where z is the braking ratio and k is the PFC.

S7.4.5.1 An EV with RBS that is part of the service brake system shall meet the performance requirement over the entire normal operating range of the RBS.

S7.5. *Cold effectiveness.*

S7.5.1. *Vehicle conditions.* (a) Vehicle load: GVWR and LLVW.

(b) Transmission position: In neutral.

S7.5.2. *Test conditions and procedures.* (a) IBT: ≤65 °C (149 °F), ≤100 °C (212 °F).

(b) Test speed: 100 km/h (62.1 mph).

(c) Pedal force: ≤65N (14.6 lbs), ≤500N (112.4 lbs).

(d) Wheel lockup: No lockup of any wheel for longer than 0.1 seconds allowed at speeds greater than 15 km/h (9.3 mph).

(e) Number of runs: 6 stops.

(f) Test surface: PFC of 0.9.

(g) For each stop, bring the vehicle to test speed and then stop the vehicle in the shortest possible distance under the specified conditions.

S7.5.3. *Performance requirements.* (a) Stopping distance for 100 km/h test speed: ≤70m (230 ft).

(b) Stopping distance for reduced test speed: $S \leq 0.10V + 0.0060V^2$.

S7.6. *High speed effectiveness.* This test is not run if vehicle maximum speed is less than or equal to 125 km/h (77.7 mph).

S7.6.1. *Vehicle conditions.* (a) Vehicle load: GVWR and LLVW.

(b) Transmission position: In gear.

S7.6.2. *Test conditions and procedures.* (a) IBT: ≤65 °C (149 °F), ≤100 °C (212 °F).

(b) Test speed: 80% of vehicle maximum speed if 125 km/h (77.7 mph) < vehicle maximum speed < 200 km/h (124.3 mph), or 160 km/h (99.4 mph) if vehicle maximum speed ≤ 200 km/h (124.3 mph).

(c) Pedal force: ≤65N (14.6 lbs), ≤500N (112.4 lbs).

(d) Wheel lockup: No lockup of any wheel for longer than 0.1 seconds allowed at speeds greater than 15 km/h (9.3 mph).

(e) Number of runs: 6 stops.

(f) Test surface: PFC of 0.9.

S7.6.3. *Performance requirements.*

Stopping distance: $S \leq 0.10V + 0.0067V^2$.

S7.7. *Stops with Engine Off.*

S7.7.1. *General information.* This test is for vehicles equipped with one or more brake power units or brake power assist units. This test is also for EVs.

S7.7.2. *Vehicle conditions.* (a) Vehicle load: GVWR only.

(b) Transmission position: In neutral.

(c) Vehicle engine: Off (not running).

(d) Ignition key position: May be returned to ''on'' position after turning engine off, or a device may be used to ''kill'' the engine while leaving the ignition key in the ''on'' position.

S7.7.3. *Test conditions and procedures.* (a) IBT: ≤65 °C (149 °F), ≤100 °C (212 °F).

(b) Test speed: 100 km/h (62.1 mph).

(c) Pedal force: ≤65N (14.6 lbs), ≤500N (112.4 lbs).

(d) Wheel lockup: No lockup of any wheel allowed for longer than 0.1 seconds at speeds greater than 15 km/h (9.3 mph).

(e) Number of runs: 6 stops.

(f) Test surface: PFC of 0.9.

(g) All system reservoirs (brake power and/or assist units) are fully charged and the vehicle's engine is off (not running) at the beginning of each stop.

(h) For an EV, this test is conducted with no electrical power supplied to the vehicle's propulsion motor(s), but with the RBS and brake power or power assist still operating, unless cutting off the supply of electrical power to the propulsion motor(s) also disables those systems.

S7.7.4. *Performance requirements.* (a) Stopping distance for 100 km/h test speed: ≤70m (230 ft.)

(b) Stopping distance for reduced test speed: $S \leq 0.10V + 0.0060V^2$.

S7.8. *Antilock functional failure.*

S7.8.1. *Vehicle conditions.* (a) Vehicle loading: LLVW and GVWR.

(b) Transmission position: In neutral.

S7.8.2. *Test conditions and procedures.* (a) IBT: ≤65 °C (149 °F), ≤100 °C (212 °F).

(b) Test speed: 100 km/h (62.1 mph).

(c) Pedal force: ≤ 65 N (14.6 lbs), ≤ 500 N (112.4 lbs).

(d) Wheel lockup: No lockup of any wheel for more than 0.1 seconds allowed at speeds greater than 15 km/h (9.3 mph).

(e) Number of runs: 6 stops.

(f) Test surface: PFC of 0.9.

(g) Functional failure simulation:

(1) Disconnect the functional power source, or any other electrical connector that creates a functional failure.

(2) Determine whether the brake system indicator is activated when any electrical functional failure of the antilock system is created.

(3) Restore the system to normal at the completion of this test.

(h) If more than one antilock brake subsystem is provided, repeat test for each subsystem.

S7.8.3. *Performance requirements.* For service brakes on a vehicle equipped with one or more antilock systems, in the event of any single functional failure in any such system, the service brake system shall continue to operate and shall stop the vehicle as specified in S7.8.3(a) or S7.8.3(b).

(a) Stopping distance for 100 km/h test speed: ≤ 85 m (279 ft).

(b) Stopping distance for reduced test speed: $S \leq 0.10V + 0.0075V^2$.

S7.9. *Variable brake proportioning system functional failure.*

S7.9.1. *Vehicle conditions.* (a) Vehicle load: LLVW and GVWR.

(b) Transmission position: In neutral.

S7.9.2. *Test conditions and procedures.* (a) IBT: ≤65 °C (149 °F), ≤100 °C (212 °F).

(b) Test speed: 100 km/h (62.1 mph).

(c) Pedal force: ≤ 65 N (14.6 lbs), ≤ 500 N (112.4 lbs).

(d) Wheel lockup: No lockup of any wheel for longer than 0.1 seconds allowed at speeds greater than 15 km/h (9.3 mph).

(e) Number of runs: 6 stops.

(f) Test surface: PFC of 0.9.

(g) Functional failure simulation:

(1) Disconnect the functional power source or mechanical linkage to render the variable brake proportioning system inoperative.

(2) If the system utilizes electrical components, determine whether the brake system indicator is activated when any electrical functional failure of the variable proportioning system is created.

(3) Restore the system to normal at the completion of this test.

(h) If more than one variable brake proportioning subsystem is provided, repeat the test for each subsystem.

S7.9.3. *Performance requirements.* The service brakes on a vehicle equipped with one or more variable brake proportioning systems, in the event of any single functional failure in any such system, shall continue to operate and shall stop the vehicle as specified in S7.9.3(a) or S7.9.3(b).

(a) Stopping distance for 100 km/h test speed: ≤ 110 m (361 ft).

(b) Stopping distance for reduced test speed: $S \leq 0.10V + 0.0100V^2$.

S7.10. *Hydraulic circuit failure.*

S7.10.1. *General information.* This test is for vehicles manufactured with or without a split service brake system.

S7.10.2. *Vehicle conditions.* (a) Vehicle load: LLVW and GVWR.

(b) Transmission position: In neutral.

S7.10.3. *Test conditions and procedures.* (a) IBT: ≤65 °C (149 °F), ≤100 °C (212 °F).

(b) Test speed: 100 km/h (62.1 mph).

(c) Pedal force: ≤65N (14.6 lbs), ≤500 N (112.4 lbs).

(d) Wheel lockup: No lockup of any wheel for longer than 0.1 seconds allowed at speeds greater than 15 km/h (9.3 mph).

(e) Test surface: PFC of 0.9.

(f) Alter the service brake system to produce any single failure. For a hydraulic circuit, this may be any single rupture or leakage type failure, other than a structural failure of a housing that is common to two or more subsystems. For a vehicle in which the brake signal is transmitted electrically between the brake pedal and some or all of the foundation brakes, regardless of the means of actuation of the foundation brakes, this may be any single failure in any circuit that electrically transmits the brake signal. For an EV with RBS that is part of the service brake system, this may be any single failure in the RBS.

(g) Determine the control force pressure level or fluid level (as appropriate for the indicator being tested) necessary to activate the brake warning indicator.

(h) Number of runs: After the brake warning indicator has been activated, make the following stops depending on the type of brake system:

(1) 4 stops for a split service brake system.

(2) 10 consecutive stops for a non-split service brake system.

(i) Each stop is made by a continuous application of the service brake control.

(j) Restore the service brake system to normal at the completion of this test.

(k) Repeat the entire sequence for each of the other subsystems.

S7.10.4 *Performance requirements.* For vehicles manufactured with a split service brake system, in the event of any failure in a single subsystem, as specified in S7.10.3(f) of this standard, and after activation of the brake system indicator as specified in S5.5.1, the remaining portions of the service brake system shall continue to operate and shall stop the vehicle as specified in S7.10.4(a) or S7.10.4(b). For vehicles not manufactured with a split service brake system, in the event of any failure in any component of the service brake system, as specified in S7.10.3(f), and after activation of the brake system indicator as specified in S5.5.1 of this standard, the vehicle shall, by operation of the service brake control, stop 10 times consecutively as specified in S7.10.4(a) or S7.10.4(b).

(a) Stopping distance from 100 km/h test speed: ≤ 168 m (551 ft).

(b) Stopping distance for reduced test speed: $S \leq 0.10V + 0.0158V^2$.

S7.11. *Brake power unit or brake power assist unit inoperative (System depleted).*

S7.11.1. *General information.* This test is for vehicles equipped with one or more brake power units or brake power assist units.

S7.11.2. *Vehicle conditions.* (a) Vehicle load: GVWR only.

(b) Transmission position: In neutral.

S7.11.3. *Test conditions and procedures.* (a) IBT: ≤65 °C (149 °F), ≤100 °C (212 °F).

(b) Test speed: 100 km/h (62.1 mph).

(c) Pedal force: ≤ 65 N (14.6 lbs), ≤ 500 N (112.4 lbs).

(d) Wheel lockup: No lockup of any wheel for longer than 0.1 seconds allowed at speeds greater than 15 km/h (9.3 mph).

(e) Number of runs: 6 stops.

(f) Test surface: PFC of 0.9.

(g) Disconnect the primary source of power for one brake power assist unit or brake power unit, or one of the brake power unit or brake power assist unit subsystems if two or more subsystems are provided.

(h) If the brake power unit or power assist unit operates in conjunction with a backup system and the backup system is automatically activated in the event of a primary power service failure, the backup system is operative during this test.

(i) Exhaust any residual brake power reserve capability of the disconnected system.

(j) Make each of the 6 stops by a continuous application of the service brake control.

(k) Restore the system to normal at completion of this test.

(l) For vehicles equipped with more than one brake power unit or brake power assist unit, conduct tests for each in turn.

(m) For vehicles with electrically-actuated service brakes (brake power unit), this test is conducted with any single electrical failure in the electrically-actuated service brakes instead of a failure of any other brake power or brake power assist unit, and all other systems intact.

S7.11.4. *Performance requirements.* The service brakes on a vehicle equipped with one or more brake power assist units or brake power units, with one such unit inoperative and depleted of all reserve capability, shall stop the vehicle as specified in S7.11.4(a) or S7.11.4(b).

(a) Stopping distance from 100 km/h test speed: ≤ 168 m (551 ft).

(b) Stopping distance for reduced test speed: $S \leq 0.10V + 0.0158V^2$.

S7.12. *Parking brake.*

S7.12.1. *Vehicle conditions.* (a) Vehicle load: GVWR only.

(b) Transmission position: In neutral.

(c) Parking brake burnish:

(1) For vehicles with parking brake systems not utilizing the service friction elements, the friction elements of such a system are burnished prior to the parking brake test according to the published recommendations furnished to the purchaser by the manufacturer.

(2) If no recommendations are furnished, the vehicle's parking brake system is tested in an unburnished condition.

(d) Parking brake applications: 1 application and up to 2 reapplications, if necessary.

S7.12.2. *Test conditions and procedures.* (a) IBT:

(1) Parking brake systems utilizing service brake friction materials shall be tested with the IBT ≤ 100 °C (212 °F) and shall have no additional burnishing or artificial heating prior to the start of the parking brake test.

(2) Parking brake systems utilizing non-service brake friction materials shall be tested with the friction materials at ambient temperature at the start of the test. The friction materials shall have no additional burnishing or artificial heating prior to or during the parking brake test.

(b) Parking brake control force: Hand control ≤ 400 N (89.9 lbs); foot control ≤ 500 N (112.4 lbs).

(c) Hand force measurement locations: The force required for actuation of a hand-operated brake system is measured at the center of the hand grip area or at a distance of 40 mm (1.57 in) from the end of the actuation lever as illustrated in Figure 3.

(d) Parking brake applications: 1 application and up to 2 reapplications, if necessary.

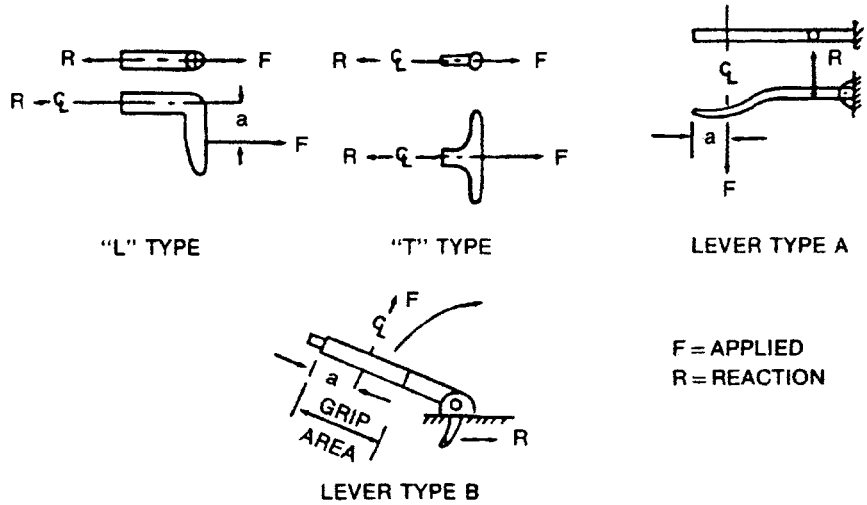

Dimension a = 40 mm (1.57in)

Figure 3–Location for Measuring Brake Application Force (Hand Brake)

(e) Test surface gradient: 20% grade.

(f) Drive the vehicle onto the grade with the longitudinal axis of the vehicle in the direction of the slope of the grade.

(g) Stop the vehicle and hold it stationary by applying the service brake control and place the transmission in neutral.

(h) With the service brake applied sufficiently to just keep the vehicle from rolling, apply the parking brake as specified in S7.12.2(i) or S7.12.2(j).

(i) For a vehicle equipped with mechanically-applied parking brakes, make a single application of the parking brake control with a force not exceeding the limits specified in S7.12.2(b). For a vehicle using an electrically-activated parking brake, apply the parking brake by activating the parking brake control.

(j) In the case of a parking brake system that does not allow application of the specified force in a single application, a series of applications may be made to achieve the specified force.

(k) Following the application of the parking brakes, release all force on the service brake control and, if the vehicle remains stationary, start the measurement of time.

(l) If the vehicle does not remain stationary, reapplication of a force to the parking brake control at the level specified in S7.12.2(b) as appropriate for the vehicle being tested (without release of the ratcheting or other holding mechanism of the parking brake) is used up to two times to attain a stationary position.

(m) Verify the operation of the parking brake application indicator.

(n) Following observation of the vehicle in a stationary condition for the specified time in one direction, repeat

the same test procedure with the vehicle orientation in the opposite direction on the same grade.

S7.12.3. *Performance requirement*. The parking brake system shall hold the vehicle stationary for 5 minutes in both a forward and reverse direction on the grade.

S7.13. *Heating Snubs*.

S7.13.1. *General information*. The purpose of the snubs is to heat up the brakes in preparation for the hot performance test which follows immediately.

S7.13.2. *Vehicle conditions*. (a) Vehicle load: GVWR only.

(b) Transmission position: In gear.

S7.13.3. *Test conditions and procedures*. (a) IBT:

(1) Establish an IBT before the first brake application (snub) of ≤55 °C (131 °F), ≤65 °C (149 °F).

(2) IBT before subsequent snubs are those occurring at the distance intervals.

(b) Number of snubs: 15.

(c) Test speeds: The initial speed for each snub is 120 km/h (74.6 mph) or 80% of Vmax, whichever is slower. Each snub is terminated at one-half the initial speed.

(d) Deceleration rate:

(1) Maintain a constant deceleration rate of 3.0 m/s^2 (9.8 fps^2).

(2) Attain the specified deceleration within one second and maintain it for the remainder of the snub.

(e) Pedal force: Adjust as necessary to maintain the specified constant deceleration rate.

(f) Time interval: Maintain an interval of 45 seconds between the start of brake applications (snubs).

(g) Accelerate as rapidly as possible to the initial test speed immediately after each snub.

(h) Immediately after the 15th snub, accelerate to 100 km/h (62.1 mph) and commence the hot performance test.

S7.14. *Hot performance*.

S7.14.1. *General information*. The hot performance test is conducted immediately after completion of the 15th heating snub.

S7.14.2. *Vehicle conditions*. (a) Vehicle load: GVWR only.

(b) Transmission position: In neutral.

S7.14.3. *Test conditions and procedures*. (a) IBT: Temperature achieved at completion of heating snubs.

(b) Test speed: 100 km/h (62.1 mph).

(c) Pedal force:

(1) The first stop is done with an average pedal force not greater than the average pedal force recorded during the shortest GVWR cold effectiveness stop.

(2) The second stop is done with a pedal force not greater than 500 N (112.4 lbs).

(d) Wheel lockup: No lockup of any wheel for longer than 0.1 seconds allowed at speeds greater than 15 km/h (9.3 mph).

(e) Number of runs: 2 stops.

(f) Immediately after the 15th heating snub, accelerate to 100 km/h (62.1 mph) and commence the first stop of the hot performance test.

(g) If the vehicle is incapable of attaining 100 km/h, it is tested at the same speed used for the GVWR cold effectiveness test.

(h) Immediately after completion of the first hot performance stop, accelerate as rapidly as possible to the specified test speed and conduct the second hot performance stop.

(i) Immediately after completion of the second hot performance stop, drive 1.5 km (0.93 mi) at 50 km/h (31.1 mph) before the first cooling stop.

S7.14.4. *Performance requirements*. (a) For the first hot stop, the stopping distance must be less than or equal to a calculated distance which is based on 60 percent of the deceleration actually achieved on the shortest GVWR cold effectiveness stop. The following equations shall be used in calculating the performance requirement:

$$d_c = \frac{0.0386V^2}{S_c - 0.10V}$$

$$S = 0.10V + \frac{0.0386V^2}{0.60(d_c)}$$

where d_c = the average deceleration actually achieved during the shortest cold effectiveness stop at GVWR (m/s^2),

S_c = actual stopping distance measured on the shortest cold effectiveness stop at GVWR (m), and

V = cold effectiveness test speed (km/h).

(b) In addition to the requirement in S7.14.4(a), the stopping distance for at least one of the two hot stops must be $S \leq 89$ m (292 ft) from a test speed of 100 km/h (62.1 mph) or, for reduced test speed, $S \leq 0.10V + 0.0079V^2$. The results of the second stop may not be used to meet the requirements of S7.14.4(a).

S7.15. *Brake cooling stops.*

S7.15.1. *General information.* The cooling stops are conducted immediately after completion of the hot performance test.

S7.15.2. *Vehicle conditions.* (a) Vehicle load: GVWR only.

(b) Transmission position: In gear.

S7.15.3. *Test conditions and procedures.* (a) IBT: Temperature achieved at completion of hot performance.

(b) Test speed: 50 km/h (31.1 mph).

(c) Pedal force: Adjust as necessary to maintain specified constant deceleration rate.

(d) Deceleration rate: Maintain a constant deceleration rate of 3.0 m/s^2 (9.8 fps^2).

(e) Wheel lockup: No lockup of any wheel for longer than 0.1 seconds allowed at speeds greater than 15 km/h (9.3 mph).

(f) Number of runs: 4 stops.

(g) Immediately after the hot performance stops drive 1.5 km (0.93 mi) at 50 km/h (31.1 mph) before the first cooling stop.

(h) For the first through the third cooling stops:

(1) After each stop, immediately accelerate at the maximum rate to 50 km/h (31.1 mph).

(2) Maintain that speed until beginning the next stop at a distance of 1.5 km (0.93 mi) from the beginning of the previous stop.

(i) For the fourth cooling stop:

(1) Immediately after the fourth stop, accelerate at the maximum rate to 100 km/h (62.1 mph).

(2) Maintain that speed until beginning the recovery performance stops at a distance of 1.5 km (0.93 mi) after the beginning of the fourth cooling stop.

S7.16. *Recovery performance.*

S7.16.1. *General information.* The recovery performance test is conducted immediately after completion of the brake cooling stops.

S7.16.2. *Vehicle conditions.* (a) Vehicle load: GVWR only.

(b) Transmission position: In neutral.

S7.16.3. *Test conditions and procedures.* (a) IBT: Temperature achieved at completion of cooling stops.

(b) Test speed: 100 km/h (62.1 mph).

(c) Pedal force: The average pedal force shall not be greater than the average pedal force recorded during the shortest GVWR cold effectiveness stop.

(d) Wheel lockup: No lockup of any wheel for longer than 0.1 seconds allowed at speeds greater than 15 km/h (9.3 mph).

(e) Number of runs: 2 stops.

(f) Immediately after the fourth cooling stop, accelerate at the maximum rate to 100 km/h (62.1 mph).

(g) Maintain that speed until beginning the first recovery performance stop at a distance of 1.5 km (0.93 mi) after the beginning of the fourth cooling stop.

(h) If the vehicle is incapable of attaining 100 km/h, it is tested at the same speed used for the GVWR cold effectiveness test.

(i) Immediately after completion of the first recovery performance stop accelerate as rapidly as possible to the specified test speed and conduct the second recovery performance stop.

S7.16.4. *Performance requirements.*

The stopping distance, S, for at least one of the two stops must be within the following limits:

$$\frac{0.0386V^2}{1.50d_c} \leq S - 0.10V \leq \frac{0.0386V^2}{0.70d_c}$$

where d_c and V are defined in S7.14.4(a).

S7.17. *Final Inspection.* Inspect:

(a) The service brake system for detachment or fracture of any components, such as brake springs and brake shoes or disc pad facings.

(b) The friction surface of the brake, the master cylinder or brake power unit reservoir cover, and seal and filler openings, for leakage of brake fluid or lubricant.

(c) The master cylinder or brake power unit reservoir for compliance with the volume and labeling requirements of S5.4.2 and S5.4.3. In determining the fully applied worn condition, assume that the lining is worn to

(1) rivet or bolt heads on riveted or bolted linings or (2) within 0.8 mm (1/32 inch) of shoe or pad mounting surface on bonded linings or (3) the limit recommended by the manufacturer, whichever is larger relative to the total possible shoe or pad movement. Drums or rotors are assumed to be at nominal design drum diameter or rotor thickness. Linings are assumed adjusted for normal operating clearance in the released position.

(d) The brake system indicators, for compliance with operation in various key positions, lens color, labeling, and location, in accordance with S5.5.

[60 FR 6434, Feb. 2, 1995; as amended at 60 FR 37847, July 24, 1995; 60 FR 44548, Aug. 28, 1995; 62 FR 46917, Sept. 5, 1997; 62 FR 51070, Sept. 30, 1997; 65 FR 6332, Feb. 9, 2000]

§ 571.138 Standard No. 138; Tire pressure monitoring systems.

S1. *Purpose and scope*. This standard specifies performance requirements for tire pressure monitoring systems to prevent significant under-inflation of tires and the resulting safety problems.

S2. *Application*. This standard applies to passenger cars, multipurpose passenger vehicles, trucks, and buses that have a gross vehicle weight rating of 4,536 kilograms (10,000 pounds) or less, except those vehicles with dual wheels on an axle, according to the phase-in schedule specified in S7 of this standard.

S3. *Definitions*. The following definitions apply to this standard:

Lightly loaded vehicle weight means unloaded vehicle weight plus the weight of a mass of 180 kg (396 pounds), including test driver and instrumentation.

Tire pressure monitoring system means a system that detects when one or more of a vehicle's tires are under-inflated and illuminates a low tire pressure warning telltale.

S4. *Requirements*.

S4.1 *General*. To the extent provided in S7.1 through S7.3, each vehicle must be equipped with a tire pressure monitoring system that meets the requirements specified in S4 under the test procedures specified in S6 of this standard. Prior to November 1, 2006, each tire pressure monitoring system must conform, at the manufacturer's option, to either S4.2.1 or S4.2.2 of this standard. The manufacturer must select the option by the time it certifies the vehicle and may not thereafter select a different option for the vehicle.

S4.2 *Tire pressure monitoring systems: vehicles manufactured after October 31, 2003 and before November 1, 2006*.

S4.2.1 *Option 1: Four tires; 25 percent under-inflation*. The tire pressure monitoring system must:

(a) Illuminate a low tire pressure warning telltale not more than 10 minutes after the inflation pressure in one or more of the vehicle's tires, up to a total of four tires, is equal to or less than either the pressure 25 percent below the vehicle manufacturer's recommended cold inflation pressure, or the pressure specified in the 3rd column of Table 1 of this standard for the corresponding type of tire, whichever is higher; and

(b) Continue to illuminate the low tire pressure warning telltale as long as the pressure in any of the vehicle's tires is equal to or less than the pressure specified in (a), and the key locking system is in the ''On'' (''Run'') position, whether or not the engine is running, or until manually reset in accordance with the vehicle manufacturer's instructions.

S4.2.2 *Option 2: One tire; 30 percent under-inflation*. The tire pressure monitoring system must:

(a) Illuminate a low tire pressure warning telltale not more than 10 minutes after the inflation pressure in one of the vehicle's tires is equal to or less than either the pressure 30 percent below the vehicle manufacturer's recommended cold inflation pressure, or the pressure specified in the 3rd column of Table 1 of this standard for the corresponding type of tire, whichever is higher; and

(b) Continue to illuminate the low tire pressure warning telltale as long as the pressure in that tire is equal to or less than the pressure specified in (a), and the key locking system is in the ''On'' (''Run'') position, whether or not the engine is running, or until manually reset in accordance with the vehicle manufacturer's instructions.

S4.3 *Low tire pressure warning telltale*.

S4.3.1 Each tire pressure monitoring system must include a low tire pressure warning telltale that:

(a) Is mounted inside the occupant compartment in front of and in clear view of the driver;

(b) Is identified by one of the symbols shown for the ''Low Tire Pressure Telltale'' in Table 2 of Standard No. 101 (§571.101); and

(c) Is illuminated under the conditions specified in S4.2.1 or S4.2.2.

S4.3.2 In the case of a telltale that identifies which tire(s) is (are) under-inflated, each tire in the symbol for that telltale must illuminate when the tire it represents is under-inflated to the extent specified in either S4.2.1 or S4.2.2.

S4.3.3 (a) Except as provided in paragraph (b) of this section, each low tire pressure warning telltale must be activated as a check of lamp function either when the key locking system is turned to the ''On'' (''Run'') position when the engine is not running, or when the key locking system is in a position between ''On'' (''Run'') and ''Start'' that is designated by the manufacturer as a check position.

(b) The low tire pressure warning telltale need not be activated when a starter interlock is in operation.

S4.4 *Replacement tires*. Each tire pressure monitoring system must continue to meet the requirements of this standard when the vehicle's original tires are replaced with tires of any optional or replacement size(s) recommended for the vehicle by the vehicle manufacturer.

S4.5 *Written instructions*.

S4.5.1 *Vehicles certified to Option 1: Four tires; 25 percent under-inflation*. The owner's manual in each vehicle certified as complying with S4.2.1 must provide an image of the Low Tire Pressure Telltale symbol with the following statement, in English: ''When the tire pressure monitoring system warning light is lit, one or more of your tires is significantly under-inflated. You should stop and check your tires as soon as possible, and inflate them to the proper pressure as indicated on the vehicle's tire information placard. Driving on a significantly under-inflated tire causes the tire to overheat and can lead to tire failure. Under-inflation also reduces fuel efficiency and tire tread life, and may affect the vehicle's handling and stopping ability. Each tire, including the spare, should be checked monthly when cold and set to the recommended inflation pressure as specified in the vehicle placard and owner's manual.'' Each vehicle manufacturer may, at its discretion, provide additional information about the significance of the low tire pressure warning telltale illuminating, description of corrective action to be undertaken, whether the tire pressure monitoring system functions with the vehicle's spare tire, and how to use the reset button, if one is provided.

S4.5.2 *Vehicles manufactured after October 31, 2003 and before November 1, 2006, and certified to Option 2: One tire; 30 percent under-inflation*. The owner's manual in each vehicle certified as complying with S4.2.2 must comply with S4.5.1 and provide the following statement, in English:

''NOTE: The tire pressure monitoring system on your vehicle will warn you when one of your tires is significantly under-inflated and when some combinations of your tires are significantly under-inflated. However, there are other combinations of significantly under-inflated tires for which your tire pressure monitoring system may *not* warn you. These other combinations are relatively common, accounting for approximately half the instances in which vehicles have significantly under-inflated tires. For example, your system may not warn you when both tires on the same side or on the same axle of your vehicle are significantly under-inflated. It is particularly important, therefore, for you to check the tire pressure in all of your tires regularly and maintain proper pressure.''

S5. *Test conditions*.

S5.1 *Ambient temperature*. The ambient temperature is between 0 °C (32 °F) and 40 °C (104 °F).

S5.2 *Road test surface*. Road tests are conducted on a dry, smooth roadway.

S5.3 *Vehicle conditions*.

S5.3.1 *Test weight*. The vehicle is tested at its lightly loaded vehicle weight and at its gross vehicle weight rating without exceeding any of its gross axle weight ratings.

S5.3.2 *Vehicle speed*. The vehicle is tested at a speed between 50 km/h (31.1 mph) and 100 km/h (62.2 mph).

S6. *Test procedures*.

(a) Inflate the vehicle's tires to the vehicle manufacturer's recommended cold inflation pressure for the applicable vehicle load conditions specified in paragraph S5.3.1 of this standard. If the vehicle manufacturer has not recommended an inflation pressure for the lightly loaded condition, the inflation pressure specified by the vehicle manufacturer for the gross vehicle weight rating is used.

(b) With the vehicle stationary and the key locking system in the ''Lock'' or ''Off'' position, turn the key locking system to the ''On'' or ''Run'' position. The tire pressure monitoring system must perform a check of telltale lamp function as specified in paragraph S4.3.3 of this standard.

(c) If applicable, reset the tire pressure monitoring system in accordance with the instructions specified in the vehicle owner's manual.

(d) Drive the vehicle at any speed specified in paragraph S5.3.2 of this standard for 20 minutes.

(e)(1) For vehicles complying with S4.2.1, stop the vehicle and deflate any combination of one to four tires until the deflated tire(s) is (are) at 7 kPa (1 psi) below the inflation pressure at which the low tire pressure monitoring system is required to activate the low tire pressure warning telltale for that vehicle.

(2) For vehicles complying with S4.2.2, stop the vehicle and deflate any one tire until the deflated tire is at 7 kPa (1 psi) below the inflation pressure at which the low tire pressure monitoring system is required to activate the low tire pressure warning telltale for that vehicle.

(f) Drive the vehicle at any speed specified in paragraph S5.3.2 of this standard. Record the time from when the vehicle speed reaches 50 km/h until the time the low tire pressure warning telltale illuminates. The telltale must illuminate within 10 minutes as required in paragraph S4.2.1(a) or S4.2.2(a) of this standard.

(g) Stop the vehicle and turn the key locking system to the ''Off'' or ''Lock'' position. After a 5 minute period, turn the vehicle's key locking system to the ''On'' or ''Run'' position. The telltale must remain illuminated.

(h) Keep the vehicle stationary for a period of one hour.

(i) Inflate all of the vehicle's tires to the vehicle manufacturer's recommended cold inflation pressure. If the vehicle's tire pressure monitoring system has a manual reset feature, reset the system in accordance with the instructions specified in the vehicle owner's manual.

(j) Drive the vehicle at any speed specified in paragraph S5.3.2 of this standard. The telltale must extinguish as specified in paragraph S4.2.1(b) or S4.2.2(b).

(k)(1) For vehicles complying with S4.2.1, if additional combinations of tires are tested, repeat the test procedures in paragraphs S6(a) through (j).

(2) For vehicles complying with S4.2.2, if the other individual tires are tested, repeat the test procedures in paragraphs S6(a) through (j).

(l) Utilizing the existing vehicle rims, repeat the test procedures in paragraphs S6(a) through (k) for each tire size recommended for the vehicle by the vehicle manufacturer. Note: If a different rim size is required, OEM rim and tire assemblies appropriate for the tire pressure monitoring system are used for testing.

S7. *Phase-In Schedule.*

S7.1 *Vehicles manufactured on or after November 1, 2003, and before November 1, 2004.* For vehicles manufactured on or after November 1, 2003, and before November 1, 2004, the number of vehicles complying with this standard must not be less than 10 percent of:

(a) The manufacturer's average annual production of vehicles manufactured on or after November 1, 2000, and before November 1, 2003; or

(b) The manufacturer's production on or after November 1, 2003, and before November 1, 2004.

S7.2 *Vehicles manufactured on or after November 1, 2004, and before November 1, 2005.* For vehicles manufactured on or after November 1, 2004, and before November 1, 2005, the number of vehicles complying with this standard must not be less than 35 percent of:

(a) The manufacturer's average annual production of vehicles manufactured on or after November 1, 2001, and before November 1, 2004; or

(b) The manufacturer's production on or after November 1, 2004, and before November 1, 2005.

S7.3 *Vehicles manufactured on or after November 1, 2005, and before November 1, 2006*. For vehicles manufactured on or after November 1, 2005, and before November 1, 2006, the number of vehicles complying with this standard must not be less than 65 percent of:

(a) The manufacturer's average annual production of vehicles manufactured on or after November 1, 2002, and before November 1, 2005; or

(b) The manufacturer's production on or after November 1, 2005, and before November 1, 2006.

S7.4 *Calculation of complying vehicles*.

(a) For purposes of complying with S7.1, a manufacturer may count a vehicle if it:

(1) Is manufactured on or after November 1, 2003, but before November 1, 2004; or

(2) Complies with S4.2.1 or S4.2.2 of this standard.

(b) For purposes of complying with S7.2, a manufacturer may count a vehicle if it:

(1)(i) Is manufactured on or after November 1, 2003, but before November 1, 2005;

(ii) Is not counted toward compliance with S7.1; and

(iii) Complies with S4.2.1 of this standard, or

(2)(i) Is manufactured on or after November 1, 2004, but before November 1, 2005; and

(ii) Complies with S4.2.2 of this standard.

(c) For purposes of complying with S7.3, a manufacturer may count a vehicle if it:

(1)(i) Is manufactured on or after November 1, 2003, but before November 1, 2006;

(ii) Is not counted toward compliance with S7.1 or S7.2; and

(iii) Complies with S4.2.1 of this standard, or

(2)(i) Is manufactured on or after November 1, 2005, but before November 1, 2006; and

(ii) Complies with S4.2.2 of this standard.

S7.5 *Vehicles produced by more than one manufacturer*.

S7.5.1 For the purpose of calculating average annual production of vehicles for each manufacturer and the number of vehicles manufactured by each manufacturer under S7.1 through S7.3, a vehicle produced by more than one manufacturer must be attributed to a single manufacturer as follows, subject to 7.5.2:

(a) A vehicle that is imported must be attributed to the importer.

(b) A vehicle manufactured in the United States by more than one manufacturer, one of which also markets the vehicle, must be attributed to the manufacturer that markets the vehicle.

S7.5.2 A vehicle produced by more than one manufacturer must be attributed to any one of the vehicle's manufacturers specified by an express written contract, reported to the National Highway Traffic Safety Administration under 49 CFR Part 590, between the manufacturer so specified and the manufacturer to which the vehicle would otherwise be attributed under S7.5.1.

S7.6 *Small volume manufacturers*. Vehicles manufactured during any of the three years of the November 1, 2003 to October 31, 2006 phase-in by a manufacturer that produces fewer than 5,000 vehicles worldwide during that year are not required to comply with the standard.

Tables to §571.138

TABLE 1.—LOW TIRE PRESSURE WARNING TELLTALE—MINIMUM ACTIVATION PRESSURE

Tire type	Maximum or rated inflation pressure		Minimum activation pressure	
	(kPa)	(psi)	(kPa)	(psi)
P-metric—Standard Load	240, 300, or 350	35, 44, or 51	140	20
P-metric—Extra Load	280 or 340	41 or 49	160	23
Load Range C	350	51	200	29
Load Range D	450	65	260	38
Load Range E	550	80	320	46

[67 FR 38746, June 5, 2002]

§ 571.201 Standard No. 201; Occupant protection in interior impact.

S1. *Purpose and scope.* This standard specifies requirements to afford impact protection for occupants.

S2. *Application.* This standard applies to passenger cars and to multipurpose passenger vehicles, trucks, and buses with a GVWR of 4,536 kilograms or less, except that the requirements of S6 do not apply to buses with a GVWR of more than 3,860 kilograms.

S3. *Definitions.*

A-pillar means any pillar that is entirely forward of a transverse vertical plane passing through the seating reference point of the driver's seat.

Ambulance means a motor vehicle designed exclusively for the purpose of emergency medical care, as evidenced by the presence of a passenger compartment to accommodate emergency medical personnel, one or more patients on litters or cots, and equipment and supplies for emergency care at a location or during transport.

B-pillar means the forwardmost pillar on each side of the vehicle that is, in whole or part, rearward of a transverse vertical plane passing through the seating reference point of the driver's seat, unless there is only one pillar rearward of that plane and it is also a rearmost pillar.

Brace means a fixed diagonal structural member in an open body vehicle that is used to brace the roll-bar and that connects the roll-bar to the main body of the vehicle structure.

Convertible means a vehicle whose A-pillars are not joined with the B-pillars (or rearmost pillars) by a fixed, rigid structural member.

Convertible roof frame means the frame of a convertible roof.

Convertible roof linkage mechanism means any anchorage, fastener, or device necessary to deploy a convertible roof frame.

Daylight opening means, for openings on the side of the vehicle, other than a door opening, the locus of all points where a horizontal line, perpendicular to the vehicle longitudinal centerline, is tangent to the periphery of the opening. For openings on the front and rear of the vehicle, other than a door opening, *daylight opening* means the locus of all points where a horizontal line, parallel to the vehicle longitudinal centerline, is tangent to the periphery of the opening. If the horizontal line is tangent to the periphery at more than one point at any location, the most inboard point is used to determine the daylight opening.

Door opening means, for door openings on the side of the vehicle, the locus of all points where a horizontal line, perpendicular to the vehicle longitudinal centerline, is tangent to the periphery of the side door opening. For door openings on the back end of the vehicle, *door opening* means the locus of all points where a horizontal line, parallel to the vehicle longitudinal centerline, is tangent to the periphery of the back door opening. If the horizontal line is tangent to the periphery at more than one point at any location, the most inboard point is the door opening.

Dynamically deployed upper interior head protection system means a protective device or devices which are integrated into a vehicle and which, when activated by an impact, provide, through means requiring no action from occupants, protection against head impacts with upper interior structures and components of the vehicle in crashes.

Forehead impact zone means the part of the free motion headform surface area that is determined in accordance with the procedure set forth in S8.10.

Free motion headform means a test device which conforms to the specifications of part 572, subpart L of this chapter.

Mid-sagittal plane of a dummy means a longitudinal vertical plane passing through the seating reference point of a designated seating position.

Motor Home means a motor vehicle with motive power that is designed to provide temporary residential accommodations, as evidenced by the presence of at least four of the following facilities: Cooking; refrigeration or ice box; self-contained toilet; heating and/or air conditioning; a potable water supply system including a faucet and a sink; and a separate 110–125 volt electrical power supply and/or an LP gas supply.

Other pillar means any pillar which is not an A-pillar, a B-pillar, or a rearmost pillar.

Pillar means any structure, excluding glazing and the vertical portion of door window frames, but including accompanying moldings, attached components such as safety belt anchorages and coat hooks, which:

(1) Supports either a roof or any other structure (such as a roll-bar) that is above the driver's head, or

(2) Is located along the side edge of a window.

Roll-bar means a fixed overhead structural member, including its vertical support structure, that extends from the left to the right side of the passenger compartment of any open body vehicles and convertibles. It does not include a header.

Seat belt anchorage means any component involved in transferring seat belt loads to the vehicle structure, including, but not limited to, the attachment hardware, but excluding webbing or straps, seat frames, seat pedestals, and the vehicle structure itself, whose failure causes separation of the belt from the vehicle structure.

Sliding door track means a track structure along the upper edge of a side door opening that secures the door in the closed position and guides the door when moving to and from the open position.

Stiffener means a fixed overhead structural member that connects one roll-bar to another roll-bar or to a header of any open body vehicle or convertible.

Upper roof means the area of the vehicle interior that is determined in accordance with the procedure set forth in S8.15.

Windshield trim means molding of any material between the windshield glazing and the exterior roof surface, including material that covers a part of either the windshield glazing or exterior roof surface.

S4 *Requirements*

S4.1 Except as provided in S4.2, each vehicle shall comply with either:

(a) The requirements specified in S5, or,

(b) The requirements specified in S5 and S6.

S4.2 Vehicles manufactured on or after September 1, 1998 shall comply with the requirements of S5 and S6.

S5 *Requirements for instrument panels, seat backs, interior compartment doors, sun visors, and armrests.* Each vehicle shall comply with the requirements specified in S5.1 through S5.5.2.

S5.1 *Instrument panels.* Except as provided in S5.1.1, when that area of the instrument panel that is within the head impact area is impacted in accordance with S5.1.2 by a 6.8 kilogram, 165 mm diameter head form at—

(a) A relative velocity of 24 kilometers per hour for all vehicles except those specified in paragraph (b) of this section,

(b) A relative velocity of 19 kilometers per hour for vehicles that meet the occupant crash protection requirements of S5.1 of 49 CFR 571.208 by means of inflatable restraint systems and meet the requirements of S4.1.5.1(a)(3) by means of a Type 2 seat belt assembly at the right front designated seating position, the deceleration of the head form shall not exceed 80 g continuously for more than 3 milliseconds.

S5.1.1 The requirements of S5.1 do not apply to:

(a) Console assemblies;

(b) Areas less than 125 mm inboard from the juncture of the instrument panel attachment to the body side inner structure;

(c) Areas closer to the windshield juncture than those statically contactable by the head form with the windshield in place;

(d) Areas outboard of any point of tangency on the instrument panel of a 165 mm diameter head form tangent to and inboard of a vertical longitudinal plane tangent to the inboard edge of the steering wheel; or

(e) Areas below any point at which a vertical line is tangent to the rearmost surface of the panel.

S5.1.2 *Demonstration procedures.* Tests shall be performed as described in Society of Automotive Engineers Recommended Practice J921, ''Instrument Panel Laboratory Impact Test Procedure,'' June 1965, using the specified instrumentation or instrumentation that meets the performance requirements specified in Society of

Automotive Engineers Recommended Practice J977, ''Instrumentation for Laboratory Impact Tests,'' November 1966, except that:

(a) The origin of the line tangent to the instrument panel surface shall be a point on a transverse horizontal line through a point 125 mm horizontally forward of the seating reference point of the front outboard passenger designated seating position, displaced vertically an amount equal to the rise which results from a 125 mm forward adjustment of the seat or 19 mm; and

(b) Direction of impact shall be either:

(1) In a vertical plane parallel to the vehicle longitudinal axis; or

(2) In a plane normal to the surface at the point of contact.

S5.2 *Seat Backs.* Except as provided in S5.2.1, when that area of the seat back that is within the head impact area is impacted in accordance with S5.2.2 by a 6.8 kilogram, 165 mm diameter head form at a relative velocity of 24 kilometers per hour, the deceleration of the head form shall not exceed 80g continuously for more than 3 milliseconds.

S5.2.1 The requirements of S5.2 do not apply to seats installed in school buses which comply with the requirements of Standard No. 222, *School Bus Passenger Seating and Occupant Protection* (49 CFR 571.222) or to rearmost side-facing, back-to-back, folding auxiliary jump, and temporary seats.

S5.2.2 *Demonstration procedures.* Tests shall be performed as described in Society of Automotive Engineers Recommended Practice J921, ''Instrument Panel Laboratory Impact Test Procedure,'' June 1965, using the specified instrumentation or instrumentation that meets the performance requirements specified in Society of Automotive Engineers Recommended Practice J977, ''Instrumentation for Laboratory Impact Tests,'' November 1966, except that:

(a) The origin of the line tangent to the uppermost seat back frame component shall be a point on a transverse horizontal line through the seating reference point of the right rear designated seating position, with adjustable forward seats in their rearmost design driving position and reclinable forward seat backs in their nominal design driving position;

(b) Direction of impact shall be either:

(1) In a vertical plane parallel to the vehicle longitudinal axis; or

(2) In a plane normal to the surface at the point of contact.

(c) For seats without head restraints installed, tests shall be performed for each individual split or bucket seat back at points within 100 mm left and right of its centerline, and for each bench seat back between points 100 mm outboard of the centerline of each outboard designated seating position;

(d) For seats having head restraints installed, each test shall be conducted with the head restraints in place at its lowest adjusted position, at a point on the head restraint centerline; and

(e) For a seat that is installed in more than one body style, tests conducted at the fore and aft extremes identified by application of subparagraph (a) shall be deemed to have demonstrated all intermediate conditions.

S5.3 *Interior compartment doors.* Each interior compartment door assembly located in an instrument panel, console assembly, seat back, or side panel adjacent to a designated seating position shall remain closed when tested in accordance with either S5.3.1(a) and S5.3.1(b) or S5.3.1(a) and S5.3.1(c). Additionally, any interior compartment door located in an instrument panel or seat back shall remain closed when the instrument panel or seat back is tested in accordance with S5.1 and S5.2. All interior compartment door assemblies with a locking device must be tested with the locking device in an unlocked position.

S5.3.1 *Demonstration procedures.*

(a) Subject the interior compartment door latch system to an inertia load of 10g in a horizontal transverse direction and an inertia load of 10g in a vertical direction in accordance with the procedure described in section 5 of SAE Recommended Practice J839b, ''Passenger Car Side Door Latch Systems,'' May 1965, or an approved equivalent.

(b) Impact the vehicle perpendicularly into a fixed collision barrier at a forward longitudinal velocity of 48 kilometers per hour.

(c) Subject the interior compartment door latch system to a horizontal inertia load of 30g in a longitudinal direction in accordance with the procedure described in section 5 of SAE Recommended Practice J839b, ''Passenger Car Side Door Latch Systems,'' May 1965, or an approved equivalent.

S5.4 *Sun visors.*

S5.4.1 A sun visor that is constructed of or covered with energy-absorbing material shall be provided for each front outboard designated seating position.

S5.4.2 Each sun visor mounting shall present no rigid material edge radius of less than 3.2 mm that is statically contactable by a spherical 165 mm diameter head form.

S5.5 *Armrests.*

S5.5.1 *General.* Each installed armrest shall conform to at least one of the following:

(a) It shall be constructed with energy-absorbing material and shall deflect or collapse laterally at least 50 mm without permitting contact with any underlying rigid material.

(b) It shall be constructed with energy-absorbing material that deflects or collapses to within 32 mm of a rigid test panel surface without permitting contact with any rigid material. Any rigid material between 13 and 32 mm from the panel surface shall have a minimum vertical height of not less than 25 mm.

(c) Along not less than 50 continuous mm of its length, the armrest shall, when measured vertically in side elevation, provide at least 50 mm of coverage within the pelvic impact area.

S5.5.2 *Folding armrests.* Each armrest that folds into the seat back or between two seat backs shall either:

(a) Meet the requirements of S5.5.1; or

(b) Be constructed of or covered with energy-absorbing material.

S6 *Requirements for upper interior components.*

S6.1 *Vehicles manufactured on or after September 1, 1998 and before September 1, 2002.* Except as provided in S6.3, for vehicles manufactured on or after September 1, 1998 and before September 1, 2002, a percentage of the manufacturer's production, as specified in S6.1.1, S6.1.2, S6.1.3, or S6.1.4, shall conform, at the manufacturer's option, to either S6.1(a) or S6.1(b). The manufacturer shall select the option by the time it certifies the vehicle and may not thereafter select a different option for the vehicle.

(a) When tested under the conditions of S8, comply with the requirements specified in S7 at the target locations specified in S10 when impacted by the free motion headform specified in S8.9 at any speed up to and including 24 km/h (15 mph). The requirements do not apply to any target that cannot be located using the procedures of S10.

(b) When equipped with a dynamically deployed upper interior head protection system and tested under the conditions of S8, comply with the requirements specified in S7 at the target locations specified in S10 as follows:

(1) Targets that are not located over any point inside the area measured along the contour of the vehicle surface within 50 mm (2.0 inch) of the periphery of the stowed system projected perpendicularly onto the vehicle interior surface, including mounting and inflation components but exclusive of any cover or covers, shall be impacted by the free motion headform specified in S8.9 at any speed up to and including 24 km/h (15 mph). The requirements do not apply to any targets that can not be located by using the procedures of S10.

(2) Targets that are over any point inside the area measured along the contour of the vehicle interior within 50 mm (2.0 inch) of the periphery of the stowed system projected perpendicularly onto the vehicle interior surface, including mounting and inflation components but exclusive of any cover or covers, when the dynamically deployed upper interior head protection system is not deployed, shall be impacted by the free motion headform specified in S8.9 at any speed up to and including 19 km/h (12 mph) with the system undeployed. The requirements do not apply to any target that can not be located using the procedures of S10.

(3) Each vehicle shall, when equipped with a dummy test device specified in Part 572, Subpart M, and tested as specified in S8.16 through S8.28, comply with the requirements specified in S7 when crashed into a fixed, rigid pole of

254 mm in diameter, at any velocity between 24 kilometers per hour (15 mph) and 29 kilometers per hour (18 mph).

S6.1.1 *Phase-in Schedule #1*

S6.1.1.1 *Vehicles manufactured on or after September 1, 1998 and before September 1, 1999.* Subject to S6.1.5(a), for vehicles manufactured by a manufacturer on or after September 1, 1998 and before September 1, 1999, the amount of vehicles complying with S7 shall be not less than 10 percent of:

(a) The manufacturer's average annual production of vehicles manufactured on or after September 1, 1996 and before September 1, 1999, or

(b) The manufacturer's production on or after September 1, 1998 and before September 1, 1999.

S6.1.1.2 *Vehicles manufactured on or after September 1, 1999 and before September 1, 2000.* Subject to S6.1.5(b), for vehicles manufactured by a manufacturer on or after September 1, 1999 and before September 1, 2000, the amount of vehicles complying with S7 shall be not less than 25 percent of:

(a) The manufacturer's average annual production of vehicles manufactured on or after September 1, 1997 and before September 1, 2000, or

(b) The manufacturer's production on or after September 1, 1999 and before September 1, 2000.

S6.1.1.3 *Vehicles manufactured on or after September 1, 2000 and before September 1, 2001.* Subject to S6.1.5(c), for vehicles manufactured by a manufacturer on or after September 1, 2000 and before September 1, 2001, the amount of vehicles complying with S7 shall be not less than 40 percent of:

(a) The manufacturer's average annual production of vehicles manufactured on or after September 1, 1998 and before September 1, 2001, or

(b) The manufacturer's production on or after September 1, 2000 and before September 1, 2001.

S6.1.1.4 *Vehicles manufactured on or after September 1, 2001 and before September 1, 2002.* Subject to S6.1.5(d), for vehicles manufactured by a manufacturer on or after September 1, 2001 and before September 1, 2002, the amount of vehicles complying with S7 shall be not less than 70 percent of:

(a) The manufacturer's average annual production of vehicles manufactured on or after September 1, 1999 and before September 1, 2002, or

(b) The manufacturer's production on or after September 1, 2001 and before September 1, 2002.

S6.1.2 *Phase-in Schedule #2*

S6.1.2.1 *Vehicles manufactured on or after September 1, 1998 and before September 1, 1999.* Subject to S6.1.5(a), for vehicles manufactured by a manufacturer on or after September 1, 1998 and before September 1, 1999, the amount of vehicles complying with S7 shall be not less than seven percent of:

(a) The manufacturer's average annual production of vehicles manufactured on or after September 1, 1996 and before September 1, 1999, or

(b) The manufacturer's production on or after September 1, 1998 and before September 1, 1999.

S6.1.2.2 *Vehicles manufactured on or after September 1, 1999 and before September 1, 2000.* Subject to S6.1.5(b), for vehicles manufactured by a manufacturer on or after September 1, 1999 and before September 1, 2000, the amount of vehicles complying with S7 shall be not less than 31 percent of:

(a) The manufacturer's average annual production of vehicles manufactured on or after September 1, 1997 and before September 1, 2000, or

(b) The manufacturer's production on or after September 1, 1999 and before September 1, 2000.

S6.1.2.3 *Vehicles manufactured on or after September 1, 2000 and before September 1, 2001.* Subject to S6.1.5(c), for vehicles manufactured by a manufacturer on or after September 1, 2000 and before September 1, 2001, the amount of vehicles complying with S7 shall be not less than 40 percent of:

(a) The manufacturer's average annual production of vehicles manufactured on or after September 1, 1998 and before September 1, 2001, or

(b) The manufacturer's production on or after September 1, 2000 and before September 1, 2001.

S6.1.2.4 *Vehicles manufactured on or after September 1, 2001 and before September 1, 2002.* Subject to S6.1.5(d), for vehicles manufactured by a manufacturer on or after September 1, 2001 and before September 1, 2002, the amount of vehicles complying with S7 shall be not less than 70 percent of:

(a) The manufacturer's average annual production of vehicles manufactured on or after September 1, 1999 and before September 1, 2002, or

(b) The manufacturer's production on or after September 1, 2001 and before September 1, 2002.

S6.1.3 *Phase-in Schedule #3*

S6.1.3.1 Vehicles manufactured on or after September 1, 1998 and before September 1, 1999 are not required to comply with the requirements specified in S7.

S6.1.3.2 Vehicles manufactured on or after September 1, 1999 shall comply with the requirements specified in S7.

S6.1.4 *Phase-in Schedule #4* A final stage manufacturer or alterer may, at its option, comply with the requirements set forth in S6.1.4.1 and S6.1.4.2.

S6.1.4.1 Vehicles manufactured on or after September 1, 1998 and before September 1, 2003 are not required to comply with the requirements specified in S7.

S6.1.4.2 Vehicles manufactured on or after September 1, 2003 shall comply with the requirements specified in S7.

S6.1.5 *Calculation of complying vehicles.*

(a) For the purposes of complying with S6.1.1.1 or S6.1.2.1, a manufacturer may count a vehicle if it is manufactured on or after May 8, 1997, but before September 1, 1999.

(b) For the purposes of complying with S6.1.1.2 or S6.1.2.2, a manufacturer may count a vehicle if it:

(1) Is manufactured on or after May 8, 1997, but before September 1, 2000, and

(2) Is not counted toward compliance with S6.1.1.1 or S6.1.2.1, as appropriate.

(c) For the purposes of complying with S6.1.1.3 or S6.1.2.3, a manufacturer may count a vehicle if it:

(1) Is manufactured on or after May 8, 1997, but before September 1, 2001, and

(2) Is not counted toward compliance with S6.1.1.1, S6.1.1.2, S6.1.2.1, or S6.1.2.2, as appropriate.

(d) For the purposes of complying with S6.1.1.4 or S6.1.2.4, a manufacturer may count a vehicle if it:

(1) Is manufactured on or after May 8, 1997, but before September 1, 2002, and

(2) Is not counted toward compliance with S6.1.1.1, S6.1.1.2, S6.1.1.3, S6.1.2.1, S6.1.2.2, or S6.1.2.3, as appropriate.

S6.1.6 *Vehicles produced by more than one manufacturer.*

S6.1.6.1 For the purpose of calculating average annual production of vehicles for each manufacturer and the number of vehicles manufactured by each manufacturer under S6.1.1 through S6.1.4, a vehicle produced by more than one manufacturer shall be attributed to a single manufacturer as follows, subject to S6.1.6.2.

(a) A vehicle which is imported shall be attributed to the importer.

(b) A vehicle manufactured in the United States by more than one manufacturer, one of which also markets the vehicle, shall be attributed to the manufacturer which markets the vehicle.

S6.1.6.2 A vehicle produced by more than one manufacturer shall be attributed to any one of the vehicle's manufacturers specified by an express written contract, reported to the National Highway Traffic Safety Administration under 49 CFR part 589, between the manufacturer so specified and the manufacturer to which the vehicle would otherwise be attributed under S6.1.6.1.

S6.2 *Vehicles manufactured on or after September 1, 2002.* Except as provided in S6.3, vehicles manufactured on or after September 1, 2002 shall, when tested under the conditions of S8, conform, at the manufacturer's option, to either S6.2(a) or S6.2(b). The manufacturer shall select the option by the time it certifies the vehicle and may not thereafter select a different option for the vehicle.

(a) When tested under the conditions of S8, comply with the requirements specified in S7 at the target locations specified in S10 when impacted by the free motion headform specified in S8.9 at any speed up to and including 24 km/h (15 mph). The requirements do not apply to any target that cannot be located using the procedures of S10.

(b) When equipped with a dynamically deployed upper interior head protection system and tested under the conditions of S8, comply with the requirements specified in S7 at the target locations specified in S10 as follows:

(1) Targets that are not located over any point inside the area measured

along the contour of the vehicle surface within 50 mm (2.0 inch) of the periphery of the stowed system projected perpendicularly onto the vehicle interior surface, including mounting and inflation components but exclusive of any cover or covers, shall be impacted by the free motion headform specified in S8.9 at any speed up to and including 24 km/h (15 mph). The requirements do not apply to any targets that cannot be located by using the procedures of S10.

(2) Targets that are over any point inside the area measured along the contour of the vehicle interior within 50 mm (2.0 inch) of the periphery of the stowed system projected perpendicularly onto the vehicle interior surface, including mounting and inflation components but exclusive of any cover or covers, when the dynamically deployed upper interior head protection system is not deployed, shall be impacted by the free motion headform specified in S8.9 at any speed up to and including 19 km/h (12 mph) with the system undeployed. The requirements do not apply to any target that cannot be located using the procedures of S10.

(3) Each vehicle shall, when equipped with a dummy test device specified in Part 572, Subpart M, and tested as specified in S8.16 through S8.28, comply with the requirements specified in S7 when crashed into a fixed, rigid pole of 254 mm in diameter, at any velocity between 24 kilometers per hour (15 mph) and 29 kilometers per hour (18 mph).

S6.3 A vehicle need not meet the requirements of S6.1 through S6.2 for:

(a) Any target located on a convertible roof frame or a convertible roof linkage mechanism.

(b) Any target located rearward of a vertical plane 600 mm behind the seating reference point of the rearmost designated seating position.

(c) Any target located rearward of a vertical plane 600 mm behind the seating reference point of the driver's seating position in an ambulance or a motor home.

(d) Any target in a walk-in van-type vehicles.

S7 *Performance Criterion*. The HIC(d) shall not exceed 1000 when calculated in accordance with the following formula:

$$\mathrm{HIC} = \left[\frac{1}{(t_2 - t_1)} \int_{t_1}^{t_2} a\,dt \right]^{2.5} (t_2 - t_1)$$

Where the term *a* is the resultant head acceleration expressed as a multiple of *g* (the acceleration of gravity), and t1 and t2 are any two points in time during the impact which are separated by not more than a 36 millisecond time interval.

(a) For the free motion headform; HIC(d)=0.75446 (free motion headform HIC)+166.4.

(b) For the part 572, subpart M, anthropomorphic test dummy; HIC(d)=HIC.

S8 *Target location and test conditions*. The vehicle shall be tested and the targets specified in S10 located under the following conditions.

S8.1 *Vehicle test attitude*.

(a) The vehicle is supported off its suspension at an attitude determined in accordance with S8.1(b).

(b) Directly above each wheel opening, determine the vertical distance between a level surface and a standard reference point on the test vehicle's body under the conditions of S8.1(b)(1) through S8.1(b)(3).

(1) The vehicle is loaded to its unloaded vehicle weight, plus its rated cargo and luggage capacity or 136 kg, whichever is less, secured in the luggage area. The load placed in the cargo area is centered over the longitudinal centerline of the vehicle.

(2) The vehicle is filled to 100 percent of all fluid capacities.

(3) All tires are inflated to the manufacturer's specifications listed on the vehicle's tire placard.

S8.2 *Windows and Sunroofs*.

(a) Movable vehicle windows are placed in the fully open position.

(b) For testing, any window on the opposite side of the longitudinal centerline of the vehicle from the target to be impacted may be removed.

(c) For testing, movable sunroofs are placed in the fully open position.

S8.3 *Convertible tops*. The top, if any, of convertibles and open-body type vehicles is in the closed passenger compartment configuration.

S8.4 *Doors*.

(a) Except as provided in S8.4(b) or S8.4(c), doors, including any rear hatchback or tailgate, are fully closed and latched but not locked.

(b) During testing, any side door on the opposite side of the longitudinal centerline of the vehicle from the target to be impacted may be open or removed.

(c) During testing, any rear hatchback or tailgate may be open or removed for testing any target except targets on the rear header, rearmost pillars, or the rearmost other side rail on either side of the vehicle.

S8.5 *Sun visors.* Each sun visor shall be placed in any position where one side of the visor is in contact with the vehicle interior surface (windshield, side rail, front header, roof, etc.).

S8.6 *Steering wheel and seats.*

(a) During targeting, the steering wheel and seats may be placed in any position intended for use while the vehicle is in motion.

(b) During testing, the steering wheel and seats may be removed from the vehicle.

S8.7 *Seat belt anchorages.* If a target is on a seat belt anchorage, and if the seat belt anchorage is adjustable, tests are conducted with the anchorage adjusted to a point midway between the two extreme adjustment positions. If the anchorage has distinct adjustment positions, none of which is midway between the two extreme positions, tests are conducted with the anchorage adjusted to the nearest position above the midpoint of the two extreme positions.

S8.8 *Temperature and humidity.*

(a) The ambient temperature is between 19 degrees C. and 26 degrees C., at any relative humidity between 10 percent and 70 percent.

(b) Tests are not conducted unless the headform specified in S8.9 is exposed to the conditions specified in S8.8(a) for a period not less than four hours.

S8.9 *Headform.* The headform used for testing conforms to the specifications of part 572, subpart L of this chapter.

S8.10 *Forehead impact zone.* The forehead impact zone of the headform is determined according to the procedure specified in (a) through (f).

(a) Position the headform so that the baseplate of the skull is horizontal. The midsagittal plane of the headform is designated as Plane S.

(b) From the center of the threaded hole on top of the headform, draw a 69 mm line forward toward the forehead, coincident with Plane S, along the contour of the outer skin of the headform. The front end of the line is designated as Point P. From Point P, draw a 100 mm line forward toward the forehead, coincident with Plane S, along the contour of the outer skin of the headform. The front end of the line is designated as Point O.

(c) Draw a 125 mm line which is coincident with a horizontal plane along the contour of the outer skin of the forehead from left to right through Point O so that the line is bisected at Point O. The end of the line on the left side of the headform is designated as Point a and the end on the right as Point b.

(d) Draw another 125 mm line which is coincident with a vertical plane along the contour of the outer skin of the forehead through Point P so that the line is bisected at Point P. The end of the line on the left side of the headform is designated as Point c and the end on the right as Point d.

(e) Draw a line from Point a to Point c along the contour of the outer skin of the headform using a flexible steel tape. Using the same method, draw a line from Point b to Point d.

(f) The forehead impact zone is the surface area on the FMH forehead bounded by lines a-O-b and c-P-d, and a-c and b-d.

S8.11 *Target circle.* The area of the vehicle to be impacted by the headform is marked with a solid circle 12.7 mm in diameter, centered on the targets specified in S10, using any transferable opaque coloring medium.

S8.12 *Location of head center of gravity.*

(a) *Location of head center of gravity for front outboard designated seating positions (CG–F).* For determination of head center of gravity, all directions are in reference to the seat orientation.

(1) *Location of rearmost CG–F (CG–F2).* For front outboard designated seating positions, the head center of gravity with the seat in its rearmost normal

design driving or riding position (CG–F2) is located 160 mm rearward and 660 mm upward from the seating reference point.

(2) *Location of forwardmost CG–F (CG–F1).* For front outboard designated seating positions, the head center of gravity with the seat in its forwardmost adjustment position (CG–F1) is located horizontally forward of CG–F2 by the distance equal to the fore-aft distance of the seat track.

(b) *Location of head center of gravity for rear outboard designated seating positions (CG–R).* For rear outboard designated seating positions, the head center of gravity (CG–R) is located 160 mm rearward, relative to the seat orientation, and 660 mm upward from the seating reference point.

S8.13 *Impact configuration.*

S8.13.1 The headform is launched from any location inside the vehicle which meets the conditions of S8.13.4. At the time of launch, the midsagittal plane of the headform is vertical and the headform is upright.

S8.13.2 The headform travels freely through the air, along a velocity vector that is perpendicular to the headform's skull cap plate, not less than 25 mm before making any contact with the vehicle.

S8.13.3 At the time of initial contact between the headform and the vehicle interior surface, some portion of the forehead impact zone of the headform must contact some portion of the target circle.

S8.13.4 *Approach Angles.* The headform launching angle is as specified in Table 1. For components for which Table 1 specifies a range of angles, the headform launching angle is within the limits determined using the procedures specified in S8.13.4.1 and S8.13.4.2, and within the range specified in Table I, using the orthogonal reference system specified in S9.

TABLE 1.—APPROACH ANGLE LIMITS

[In degrees]

Target component	Horizontal angle	Vertical angle
Front Header	180	0–50
Rear Header	0 or 360	0–50
Left Side Rail	270	0–50
Right Side Rail	90	0–50
Left Sliding Door Track	270	0–50
Right Sliding Door Track	90	0–50

TABLE 1.—APPROACH ANGLE LIMITS—Continued

[In degrees]

Target component	Horizontal angle	Vertical angle
Left A-Pillar	195–255	−5–50
Right A-Pillar	105–165	−5–50
Left B-Pillar	195–345	−10–50
Right B-Pillar	15–165	−10–50
Other Left Pillars	270	−10–50
Other Right Pillars	90	−10–50
Left Rearmost Pillar	270–345	−10–50
Right Rearmost Pillar	15–90	−10–50
Upper Roof	Any	0–50
Overhead Rollbar	0 or 180	0–50
Brace or Stiffener	90 or 270	0–50
Seat Belt Anchorages	Any	0–50

S8.13.4.1 *Horizontal Approach Angles for Headform Impacts.*

(a) *Left A-Pillar Horizontal Approach Angles.*

(1) Locate a line formed by the shortest horizontal distance between CG–F1 for the left seat and the right A-pillar. The maximum horizontal approach angle for the left A-pillar equals 360 degrees minus the angle formed by that line and the X-axis of the vehicle, measured counterclockwise.

(2) Locate a line formed by the shortest horizontal distance between CG–F2 for the left seat and the left A-pillar. The minimum horizontal approach angle for the left A-pillar impact equals the angle formed by that line and the X-axis of the vehicle, measured counterclockwise.

(b) *Right A-Pillar Horizontal Approach Angles.*

(1) Locate a line formed by the shortest horizontal distance between CG–F1 for the right seat and the left A-pillar. The minimum horizontal approach angle for the right A-pillar equals 360 degrees minus the angle formed by that line and the X-axis of the vehicle, measured counterclockwise.

(2) Locate a line formed by the shortest horizontal distance between CG–F2 for the right seat and the right A-pillar. The maximum horizontal approach angle for the right A-pillar impact equals the angle formed by that line and the X-axis of the vehicle measured counterclockwise.

(c) *Left B-Pillar Horizontal Approach Angles.*

(1) Locate a line formed by the shortest horizontal distance between CG–F2 for the left seat and the left B-pillar.

The maximum horizontal approach angle for the left B-pillar equals the angle formed by that line and the X-axis of the vehicle measured counterclockwise, or 270 degrees, whichever is greater.

(2) Locate a line formed by the shortest horizontal distance between CG–R for the left seat and the left B-pillar. The minimum horizontal approach angle for the left B-pillar equals the angle formed by that line and the X-axis of the vehicle measured counterclockwise.

(d) *Right B-Pillar Horizontal Approach Angles.*

(1) Locate a line formed by the shortest horizontal distance between CG–F2 for the right seat and the right B-pillar. The minimum horizontal approach angle for the right B-pillar equals the angle formed by that line and the X-axis of the vehicle measured counterclockwise, or 90 degrees, whichever is less.

(2) Locate a line formed by the shortest horizontal distance between CG–R for the right seat and the right B-pillar. The maximum horizontal approach angle for the right B-pillar equals the angle between that line and the X-axis of the vehicle measured counterclockwise.

S8.13.4.2 *Vertical Approach Angles*

(a) Position the forehead impact zone in contact with the selected target at the prescribed horizontal approach angle. If a range of horizontal approach angles is prescribed, position the forehead impact zone in contact with the selected target at any horizontal approach angle within the range which may be used for testing.

(b) Keeping the forehead impact zone in contact with the target, rotate the FMH upward until the lip, chin or other part of the FMH contacts the component or other portion of the vehicle interior.

(1) Except as provided in S8.13.4.2(b)(2), keeping the forehead impact zone in contact with the target, rotate the FMH downward by 5 degrees for each target to determine the maximum vertical angle.

(2) For all pillars except A-Pillars, keeping the forehead impact zone in contact with the target, rotate the FMH downward by 10 degrees for each target to determine the maximum vertical angle.

S8.14 *Multiple impacts.*

(a) A vehicle being tested may be impacted multiple times, subject to the limitations in S8.14 (b) and (c).

(b) As measured as provided in S8.14(d), impacts within 300 mm of each other may not occur less than 30 minutes apart.

(c) As measured as provided in S8.14(d), no impact may occur within 150 mm of any other impact.

(d) For S8.14(b) and S8.14(c), the distance between impacts is the distance between the centers of the target circle specified in S8.11 for each impact, measured along the vehicle interior.

S8.15 *Upper Roof.* The upper roof of a vehicle is determined according to the procedure specified in S8.15 (a) through (h).

(a) Locate the transverse vertical plane A at the forwardmost point where it contacts the interior roof (including trim) at the vehicle centerline.

(b) Locate the transverse vertical plane B at the rearmost point where it contacts the interior roof (including trim) at the vehicle centerline.

(c) Measure the horizontal distance (D1) between Plane A and Plane B.

(d) Locate the vertical longitudinal plane C at the leftmost point at which a vertical transverse plane, located 300 mm rearward of the A-pillar reference point described in S10.1(a), contacts the interior roof (including trim).

(e) Locate the vertical longitudinal plane D at the rightmost point at which a vertical transverse plane, located 300 mm rearward of the A-pillar reference point described in S10.1(a), contacts the interior roof (including trim).

(f) Measure the horizontal distance (D2) between Plane C and Plane D.

(g) Locate a point (Point M) on the interior roof surface, midway between Plane A and Plane B along the vehicle longitudinal centerline.

(h) The upper roof zone is the area of the vehicle upper interior surface bounded by the four planes described in S8.15(h)(1) and S8.15(h)(2):

(1) A transverse vertical plane E located at a distance of (.35 D1) forward of Point M and a transverse vertical

plane F located at a distance of (.35 D1) rearward of Point M, measured horizontally.

(2) A longitudinal vertical plane G located at a distance of (.35 D2) to the left of Point M and a longitudinal vertical plane H located at a distance of (.35 D2) to the right of Point M, measured horizontally.

S8.16 *Test weight—vehicle to pole test.* Each vehicle shall be loaded to its unloaded vehicle weight, plus 136 kilograms (300 pounds) or its rated cargo and luggage capacity (whichever is less), secured in the luggage or load-carrying area, plus the weight of the necessary anthropomorphic test dummy. Any added test equipment shall be located away from impact areas in secure places in the vehicle.

S8.17 *Vehicle test attitude—vehicle to pole test.* Determine the distance between a level surface and a standard reference point on the test vehicle's body, directly above each wheel opening, when the vehicle is in its ''as delivered'' condition. The ''as delivered'' condition is the vehicle as received at the test site, filled to 100 percent of all fluid capacities and with all tires inflated to the manufacturer's specifications listed on the vehicle's tire placard. Determine the distance between the same level surface and the same standard reference points in the vehicle's ''fully loaded condition.'' The ''fully loaded condition'' is the test vehicle loaded in accordance with S8.16. The load placed in the cargo area shall be centered over the longitudinal centerline of the vehicle. The pretest vehicle attitude shall be the same as either the ''as delivered'' or ''fully loaded'' attitude or is between the ''as delivered'' attitude and the ''fully loaded'' attitude. If the test configuration requires that the vehicle be elevated off the ground, the pretest vehicle attitude must be maintained.

S8.18 *Adjustable seats—vehicle to pole test.* Initially, adjustable seats shall be adjusted as specified in S6.3 of Standard 214 (49 CFR 571.214).

S8.19 *Adjustable seat back placement—vehicle to pole test.* Initially, position adjustable seat backs in the manner specified in S6.4 of Standard 214 (49 CFR 571.214).

S8.20 *Adjustable steering wheels—vehicle to pole test.* Adjustable steering controls shall be adjusted so that the steering wheel hub is at the geometric center of the locus it describes when it is moved through its full range of driving positions.

S8.21 *Windows and sunroof—vehicle to pole test.* Movable windows and vents shall be placed in the fully open position. Any sunroof shall be placed in the fully closed position.

S8.22 *Convertible tops—vehicle to pole test.* The top, if any, of convertibles and open-body type vehicles shall be in the closed passenger compartment configuration.

S8.23 *Doors—vehicle to pole test.* Doors, including any rear hatchback or tailgate, shall be fully closed and latched but not locked.

S8.24 *Impact reference line—vehicle to pole test.* On the striking side of the vehicle, place an impact reference line at the intersection of the vehicle exterior and a transverse vertical plane passing through the center of gravity of the head of the dummy seated in accordance with S8.28, in the front outboard designated seating position.

S8.25 *Rigid Pole—vehicle to pole test.* The rigid pole is a vertical metal structure beginning no more than 102 millimeters (4 inches) above the lowest point of the tires on the striking side of the test vehicle when the vehicle is loaded as specified in S8.16 and extending above the highest point of the roof of the test vehicle. The pole is 254 mm ±3 mm (10 inches) in diameter and set off from any mounting surface, such as a barrier or other structure, so that the test vehicle will not contact such a mount or support at any time within 100 milliseconds of the initiation of vehicle to pole contact.

S8.26 *Impact configuration—vehicle to pole test.* The rigid pole shall be stationary. The test vehicle shall be propelled sideways so that its line of forward motion forms an angle of 90 degrees (±3 degrees) with the vehicle's longitudinal center line. The impact reference line shall be aligned with the center line of the rigid pole so that, when the vehicle-to-pole contact occurs, the center line of the pole contacts the vehicle area bounded by two transverse vertical planes 38 mm (1.5

inches) forward and aft of the impact reference line.

S8.27 *Anthropomorphic test dummy—vehicle to pole test.*

S8.27.1 The anthropomorphic test dummy used for evaluation of a vehicle's head impact protection shall conform to the requirements of subpart M of part 572 of this chapter (49 CFR part 572, subpart M). In a test in which the test vehicle is striking its left side, the dummy is to be configured and instrumented to strike on its left side, in accordance with subpart M of part 572. In a test in which the test vehicle is striking its right side, the dummy is to be configured and instrumented to strike its right side, in accordance with subpart M of part 572.

S8.27.2 The part 572, subpart M, test dummy specified is clothed in form fitting cotton stretch garments with short sleeves and midcalf length pants. Each foot of the test dummy is equipped with a size 11EEE shoe, which meets the configuration size, sole, and heel thickness specifications of MIL–S–13192 (1976) and weighs 0.57 ±0.09 kilograms (1.25 ±0.2 pounds).

S8.27.3 Limb joints shall be set at between 1 and 2 g's. Leg joints are adjusted with the torso in the supine position.

S8.27.4 The stabilized temperature of the test dummy at the time of the side impact test shall be at any temperature between 20.6 degrees C. and 22.2 degrees C.

S8.27.5 The acceleration data from the accelerometers installed inside the skull cavity of the test dummy are processed according to the practices set forth in SAE Recommended Practice J211, March 1995, ''Instrumentation for Impact Tests,'' Class 1000.

S8.28 *Positioning procedure for the Part 572 Subpart M Test Dummy—vehicle to pole test.* The part 572, subpart M, test dummy shall be initially positioned in the front outboard seating position on the struck side of the vehicle in accordance with the provisions of S7 of Standard 214, 49 CFR 571.214, and the vehicle seat shall be positioned as specified in S6.3 and S6.4 of that standard. The position of the dummy shall then be measured as follows. Locate the horizontal plane passing through the dummy head center of gravity. Identify the rearmost point on the dummy head in that plane. Construct a line in the plane that contains the rearward point of the front door daylight opening and is perpendicular to the longitudinal vehicle centerline. Measure the longitudinal distance between the rearmost point on the dummy head and this line. If this distance is less than 50 mm (2 inches) or the point is not forward of the line, then the seat and/or dummy positions shall be adjusted as follows. First, the seat back angle is adjusted, a maximum of 5 degrees, until a 50 mm (2 inches) distance is achieved. If this is not sufficient to produce the 50 mm (2 inches) distance, the seat is moved forward until the 50 mm (2 inches) distance is achieved or until the knees of the dummy contact the dashboard or knee bolster, whichever comes first. If the required distance cannot be achieved through movement of the seat, the seat back angle shall be adjusted even further forward until the 50mm (2 inches) distance is obtained or until the seat back is in its full upright locking position.

S9. *Orthogonal Reference System.* The approach angles specified in S8.13.4 are determined using the reference system specified in S9.1 through S9.4.

S9.1 An orthogonal reference system consisting of a longitudinal X axis and a transverse Y axis in the same horizontal plane and a vertical Z axis through the intersection of X and Y is used to define the horizontal direction of approach of the headform. The X–Z plane is the vertical longitudinal zero plane and is parallel to the longitudinal centerline of the vehicle. The X–Y plane is the horizontal zero plane parallel to the ground. The Y–Z plane is the vertical transverse zero plane that is perpendicular to the X–Y and X–Z planes. The X coordinate is negative forward of the Y–Z plane and positive to the rear. The Y coordinate is negative to the left of the X–Z plane and positive to the right. The Z coordinate is negative below the X–Y plane and positive above it. (See Figure 1.)

S9.2 The origin of the reference system is the center of gravity of the headform at the time immediately prior to launch for each test.

S9.3 The horizontal approach angle is the angle between the X axis and the headform impact velocity vector projected onto the horizontal zero plane, measured in the horizontal zero plane in the counter-clockwise direction. A 0 degree horizontal vector and a 360 degree horizontal vector point in the positive X direction; a 90 degree horizontal vector points in the positive Y direction; a 180 degree horizontal vector points in the negative X direction; and a 270 horizontal degree vector points in the negative Y direction. (See Figure 2.)

S9.4 The vertical approach angle is the angle between the horizontal plane and the velocity vector, measured in the midsagittal plane of the headform. A 0 degree vertical vector in Table I coincides with the horizontal plane and a vertical vector of greater than 0 degrees in Table I makes a upward angle of the same number of degrees with that plane.

S10 *Target Locations.*

(a) The target locations specified in S10.1 through S10.13 are located on both sides of the vehicle and, except as specified in S10(b), are determined using the procedures specified in those paragraphs.

(b) Except as specified in S10(c), in instances in which there is no combination of horizontal and vertical angles specified in S8.13.4 at which the forehead impact zone of the free motion headform can contact one of the targets located using the procedures in S10.1 through S10.13, the center of that target is moved to any location that is within a sphere with a radius of 25 mm, centered on the center of the original target, and that can be contacted by the forehead impact zone at one or more combination of angles.

(c) If there is no point within the sphere specified in S10(b) which the forehead impact zone of the free motion headform can contact at one or more combination of horizontal and vertical angles specified in S8.13.4, the radius of the sphere is increased by 25 mm increments until the sphere contains at least one point that can be contacted at one or more combination of angles.

S10.1 *A-pillar targets*

(a) *A-pillar reference point and target AP1.* On the vehicle exterior, locate a transverse vertical plane (Plane 1) which contacts the rearmost point of the windshield trim. The intersection of Plane 1 and the vehicle exterior surface is Line 1. Measuring along the vehicle exterior surface, locate a point (Point 1) on Line 1 that is 125 mm inboard of the intersection of Line 1 and a vertical plane tangent to the vehicle at the outboardmost point on Line 1 with the vehicle side door open. Measuring along the vehicle exterior surface in a longitudinal vertical plane (Plane 2) passing through Point 1, locate a point (Point 2) 50 mm rearward of Point 1. Locate the A-pillar reference point (Point APR) at the intersection of the interior roof surface and a line that is perpendicular to the vehicle exterior surface at Point 2. Target AP1 is located at point APR.

(b) *Target AP2.* Locate the horizontal plane (Plane 3) which intersects point APR. Locate the horizontal plane (Plane 4) which is 88 mm below Plane 3. Target AP2 is the point in Plane 4 and on the A-pillar which is closest to CG–F2 for the nearest seating position.

(c) *Target AP3.* Locate the horizontal plane (Plane 5) containing the highest point at the intersection of the dashboard and the A-pillar. Locate a horizontal plane (Plane 6) half-way between Plane 3 and Plane 5. Target AP3 is the point on Plane 6 and the A-pillar which is closest to CG–F1 for the nearest seating position.

S10.2 *B-pillar targets.*

(a) *B-pillar reference point and target BP1.* Locate the point (Point 3) on the vehicle interior at the intersection of the horizontal plane passing through the highest point of the forwardmost door opening and the centerline of the width of the B-pillar, as viewed laterally. Locate a transverse vertical plane (Plane 7) which passes through Point 3. Locate the point (Point 4) at the intersection of the interior roof surface, Plane 7, and the plane, described in S8.15(h), defining the nearest edge of the upper roof. The B-pillar reference point (Point BPR) is the point located at the middle of the line from Point 3 to Point 4 in Plane 7, measured along the vehicle interior surface. Target BP1 is located at Point BPR.

(b) *Target BP2*. If a seat belt anchorage is located on the B-pillar, Target BP2 is located at any point on the anchorage.

(c) *Target BP3*. Target BP3 is located in accordance with this paragraph. Locate a horizontal plane (Plane 8) which intersects Point BPR. Locate a horizontal plane (Plane 9) which passes through the lowest point of the daylight opening forward of the pillar. Locate a horizontal plane (Plane 10) halfway between Plane 8 and Plane 9. Target BP3 is the point located in Plane 10 and on the interior surface of the B-pillar, which is closest to CG–F(2) for the nearest seating position.

(d) *Target BP4*. Locate a horizontal plane (Plane 11) half-way between Plane 9 and Plane 10. Target BP4 is the point located in Plane 11 and on the interior surface of the B-pillar which is closest to CG–R for the nearest seating position.

S10.3 *Other pillar targets*.

(a) *Target OP1*.

(1) Except as provided in S10.3(a)(2), target OP1 is located in accordance with this paragraph. Locate the point (Point 5), on the vehicle interior, at the intersection of the horizontal plane through the highest point of the highest adjacent door opening or daylight opening (if no adjacent door opening) and the centerline of the width of the other pillar, as viewed laterally. Locate a transverse vertical plane (Plane 12) passing through Point 5. Locate the point (Point 6) at the intersection of the interior roof surface, Plane 12 and the plane, described in S8.15(h), defining the nearest edge of the upper roof. The other pillar reference point (Point OPR) is the point located at the middle of the line between Point 5 and Point 6 in Plane 12, measured along the vehicle interior surface. Target OP1 is located at Point OPR.

(2) If a seat belt anchorage is located on the pillar, Target OP1 is any point on the anchorage.

(b) *Target OP2*. Locate the horizontal plane (Plane 13) intersecting Point OPR. Locate a horizontal plane (Plane 14) passing through the lowest point of the daylight opening forward of the pillar. Locate a horizontal plane (Plane 15) half-way between Plane 13 and Plane 14. Target OP2 is the point located on the interior surface of the pillar at the intersection of Plane 15 and the centerline of the width of the pillar, as viewed laterally.

S10.4 *Rearmost pillar targets*

(a) *Rearmost pillar reference point and target RP1*. Locate the point (Point 7) at the corner of the upper roof nearest to the pillar. The distance between Point M, as described in S8.15(g), and Point 7, as measured along the vehicle interior surface, is D. Extend the line from Point M to Point 7 along the vehicle interior surface in the same vertical plane by (3*D/7) beyond Point 7 or until the edge of a daylight opening, whichever comes first, to locate Point 8. The rearmost pillar reference point (Point RPR) is at the midpoint of the line between Point 7 and Point 8, measured along the vehicle interior. Target RP1 is located at Point RPR.

(b) *Target RP2*.

(1) Except as provided in S10.4(b)(2), target RP2 is located in accordance with this paragraph. Locate the horizontal plane (Plane 16) through Point RPR. Locate the horizontal plane (Plane 17) 150 mm below Plane 16. Target RP2 is located in Plane 17 and on the pillar at the location closest to CG–R for the nearest designated seating position.

(2) If a seat belt anchorage is located on the pillar, Target RP2 is any point on the anchorage.

S10.5 *Front header targets*.

(a) *Target FH1*. Locate the contour line (Line 2) on the vehicle interior trim which passes through the APR and is parallel to the contour line (Line 3) at the upper edge of the windshield on the vehicle interior. Locate the point (Point 9) on Line 2 that is 125 mm inboard of the APR, measured along that line. Locate a longitudinal vertical plane (Plane 18) that passes through Point 9. Target FH1 is located at the intersection of Plane 18 and the upper vehicle interior, halfway between a transverse vertical plane (Plane 19) through Point 9 and a transverse vertical plane (Plane 20) through the intersection of Plane 18 and Line 3.

(b) *Target FH2*.

(1) Except as provided in S10.5(b)(2), target FH2 is located in accordance with this paragraph. Locate a point (Point 10) 275 mm inboard of Point

APR, along Line 2. Locate a longitudinal vertical plane (Plane 21) that passes through Point 10. Target FH2 is located at the intersection of Plane 21 and the upper vehicle interior, halfway between a transverse vertical plane (Plane 22) through Point 10 and a transverse vertical plane (Plane 23) through the intersection of Plane 21 and Line 3.

(2) If a sun roof opening is located forward of the front edge of the upper roof and intersects the mid-sagittal plane of a dummy seated in either front outboard seating position, target FH2 is the nearest point that is forward of a transverse vertical plane (Plane 24) through CG–F(2) and on the intersection of the mid-sagittal plane and the interior sunroof opening.

S10.6 *Targets on the side rail between the A-pillar and the B-pillar or rearmost pillar in vehicles with only two pillars on each side of the vehicle.*

(a) *Target SR1.* Locate a transverse vertical plane (Plane 25) 150 mm rearward of Point APR. Locate the point (Point 11) at the intersection of Plane 25 and the upper edge of the forwardmost door opening. Locate the point (Point 12) at the intersection of the interior roof surface, Plane 25 and the plane, described in S8.15(h), defining the nearest edge of the upper roof. Target SR1 is located at the middle of the line between Point 11 and Point 12 in Plane 25, measured along the vehicle interior.

(b) *Target SR2.* Locate a transverse vertical plane (Plane 26) 300 mm rearward of the APR or 300 mm forward of the BPR (or the RPR in vehicles with no B-pillar). Locate the point (Point 13) at the intersection of Plane 26 and the upper edge of the forwardmost door opening. Locate the point (Point 14) at the intersection of the interior roof surface, Plane 26 and the plane, described in S8.15(h), defining the nearest edge of the upper roof. Target SR2 is located at the middle of the line between Point 13 and Point 14 in Plane 26, measured along the vehicle interior.

S10.7 *Other side rail target (target SR3).*

(a) Except as provided in S10.7(b), target SR3 is located in accordance with this paragraph. Locate a transverse vertical plane (Plane 27) 150 mm rearward of either Point BPR or Point OPR. Locate the point (Point 15) as provided in either S10.7(a)(1) or S10.7(a)(2), as appropriate. Locate the point (Point 16) at the intersection of the interior roof surface, Plane 27 and the plane, described in S8.15(h), defining the nearest edge of the upper roof. Target SR3 is located at the middle of the line between Point 15 and Point 16 in Plane 27, measured along the vehicle interior surface.

(1) If Plane 27 intersects a door or daylight opening, the Point 15 is located at the intersection of Plane 27 and the upper edge of the door opening or daylight opening.

(2) If Plane 27 does not intersect a door or daylight opening, the Point 15 is located on the vehicle interior at the intersection of Plane 27 and the horizontal plane through the highest point of the door or daylight opening nearest Plane 27. If the adjacent door(s) or daylight opening(s) are equidistant to Plane 27, Point 15 is located on the vehicle interior at the intersection of Plane 27 and either horizontal plane through the highest point of each door or daylight opening.

(b) Except as provided in S10.7(c), if a grab handle is located on the side rail, target SR3 is located at any point on the anchorage of the grab-handle. Folding grab-handles are in their stowed position for testing.

(c) If a seat belt anchorage is located on the side rail, target SR3 is located at any point on the anchorage.

S10.8 *Rear header target (target RH).* Locate the point (Point 17) at the intersection of the surface of the upper vehicle interior, the mid-sagittal plane (Plane 28) of the outboard rearmost dummy and the plane, described in S8.15(h), defining the rear edge of the upper roof. Locate the point (Point 18) as provided in S10.8(a) or S10.8(b), as appropriate. Except as provided in S10.8(c), Target RH is located at the mid-point of the line that is between Point 17 and Point 18 and is in Plane 28, as measured along the surface of the vehicle interior.

(a) If Plane 28 intersects a rear door opening or daylight opening, then Point 18 is located at the intersection of Plane 28 and the upper edge of the door opening or the daylight opening (if no door opening).

(b) If Plane 28 does not intersect a rear door opening or daylight opening, then Point 18 is located on the vehicle interior at the intersection of Plane 28 and a horizontal plane through the highest point of the door or daylight opening nearest to Plane 28. If the adjacent door(s) or daylight opening(s) are equidistant to Plane 28, Point 18 is located on the vehicle interior at the intersection of Plane 28 and either horizontal plane through the highest point of each door or daylight opening.

(c) If Target RH is more than 112 mm from Point 18 on the line that is between Point 17 and Point 18 and is in Plane 28, as measured along the surface of the vehicle interior, then Target RH is the point on that line which is 112 mm from Point 18.

S10.9 *Upper roof target (target UR).* Target UR is any point on the upper roof.

S10.10 *Sliding door track target (target SD).* Locate the transverse vertical plane (Plane 29) passing through the middle of the widest opening of the sliding door, measured horizontally and parallel to the vehicle longitudinal centerline. Locate the point (Point 19) at the intersection of the surface of the upper vehicle interior, Plane 29 and the plane, described in S8.15(h), defining the nearest edge of the upper roof. Locate the point (Point 20) at the intersection of Plane 29 and the upper edge of the sliding door opening. Target SD is located at the middle of the line between Point 19 and Point 20 in Plane 29, measured along the vehicle interior.

S10.11 *Roll-bar targets.*

(a) *Target RB1.* Locate a longitudinal vertical plane (Plane 30) at the midsagittal plane of a dummy seated in any outboard designated seating position. Target RB1 is located on the roll-bar and in Plane 30 at the location closest to either CG–F2 or CG–R, as appropriate, for the same dummy.

(b) *Target RB2.* If a seat belt anchorage is located on the roll-bar, Target RB2 is any point on the anchorage.

S10.12 *Stiffener targets.*

(a) *Target ST1.* Locate a transverse vertical plane (Plane 31) containing either CG–F2 or CG–R, as appropriate, for any outboard designated seating position. Target ST1 is located on the stiffener and in Plane 31 at the location closest to either CG–F2 or CG–R, as appropriate.

(b) *Target ST2.* If a seat belt anchorage is located on the stiffener, Target ST2 is any point on the anchorage.

S10.13 *Brace target (target BT)* Target BT is any point on the width of the brace as viewed laterally from inside the passenger compartment.

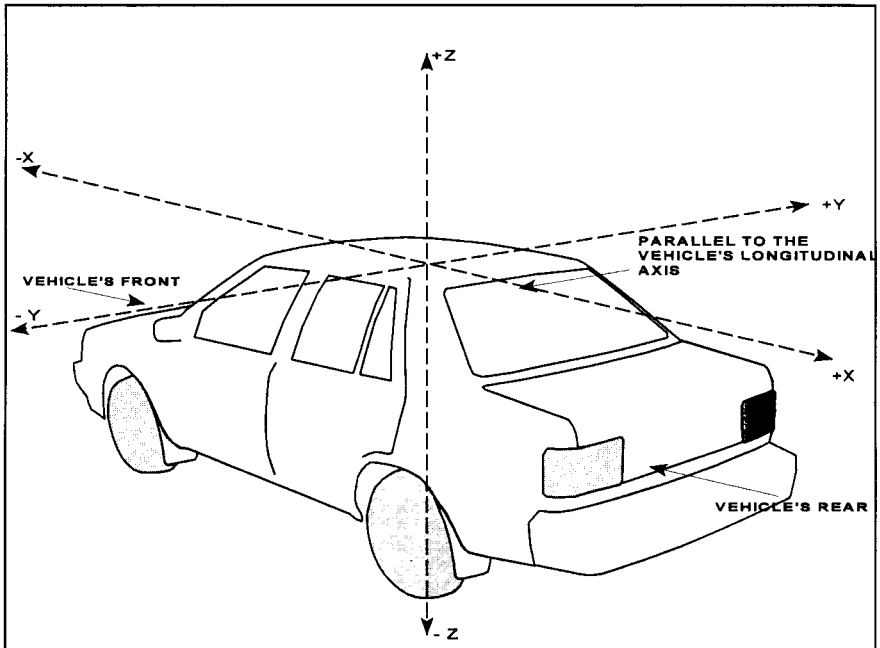

FIGURE 1 - ORTHOGONAL REFERENCE SYSTEM

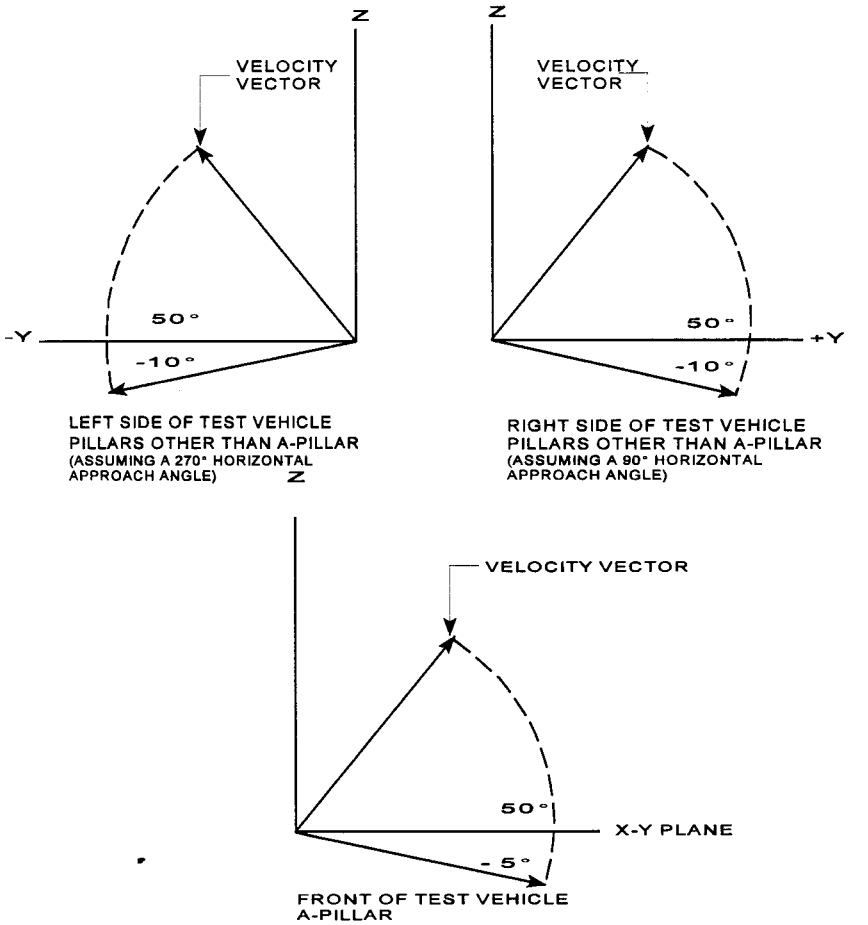

VERTICAL AND HORIZONTAL APPROACH ANGLE PLANE
FIGURE 2

[62 FR 16725, Apr. 8, 1997; 63 FR 28, Jan. 2, 1998; 63 FR 41464, Aug. 4, 1998; 63 FR 45965, Aug. 28, 1998; 64 FR 7140, Feb. 12, 1999; 64 FR 69671, Dec. 14, 1999; 67 FR 41354, June 18, 2002]

§571.202 Standard No. 202; Head restraints.

S1. *Purpose and scope.* This standard specifies requirements for head restraints to reduce the frequency and severity of neck injury in rear-end and other collisions.

S2. *Application.* This standard applies to passenger cars, and to multipurpose passenger vehicles, trucks and buses with a GVWR of 4,536 kg or less.

S3. *Definitions. Head restraint* means a device that limits rearward angular displacement of the occupant's head relative to his torso line.

S4. *Requirements.*

S4.1 Each passenger car shall comply with S4.3.

S4.2 Each truck, multipurpose passenger vehicle and bus with a GVWR of 4,536 kg or less, shall comply with S4.3.

S4.3 *Performance levels*. Except for school buses, a head restraint that conforms to either (a) or (b) shall be provided at each outboard front designated seating position. For school buses, a head restraint that conforms to either (a) or (b) shall be provided for the driver's seating position.

(a) It shall, when tested in accordance with S5.1, during a forward acceleration of at least 78 m/s² on the seat supporting structure, limit rearward angular displacement of the head reference line to 45° from the torso reference line; or

(b) It shall, when adjusted to its fully extended design position, conform to each of the following—

(1) When measured parallel to torso line, the top of the head restraint shall not be less than 700 mm above the seating reference point;

(2) When measured either 64 mm below the top of the head restraint or 635 mm above the seating reference point, the lateral width of the head restraint shall be not less than—

(i) 254 mm for use with bench-type seats; and

(ii) 171 mm for use with individual seats:

(3) When tested in accordance with S5.2, the rearmost portion of the head form shall not be displaced to more than 102 mm perpendicularly rearward of the displaced extended torso reference line during the application of the load specified in S5.2(c); and

(4) When tested in accordance with S5.2, the head restraint shall withstand an increasing load until one of the following occurs:

(i) Failure of the seat or seat back; or

(ii) Application of a load of 890 N.

S5. *Demonstration procedures*.

S5.1 Compliance with S4.3(a) shall be demonstrated in accordance with the following with the head restraint in its fully extended design position:

(a) On the exterior profile of the head and torso of a dummy having the weight and seated height of a 95th percentile adult male with an approved representation of a human, articulated neck structure, or an approved equivalent test device, establish reference lines by the following method:

(1) Position the dummy's back on a horizontal flat surface with the lumbar joints in a straight line.

(2) Rotate the head of the dummy rearward until the back of the head contacts the same flat horizontal surface in paragraph (1).

(3) Position the SAE J–826 two-dimensional manikin's back against the flat surface in S5.1(a)(1), alongside the dummy with the h-point of the manikin aligned with the h-point of the dummy.

(4) Establish the torso line of the manikin as defined in SAE Aerospace-Automotive Drawing Standards, sec. 2.3.6, P.E1.01, September 1963.

(5) Establish the dummy torso reference line by superimposing the torso line of the manikin on the torso of the dummy.

(6) Establish the head reference line by extending the dummy torso reference line onto the head.

(b) At each designated seating position having a head restraint, place the dummy, snugly restrained by a Type 1 seat belt, in the manufacturer's recommended design seated position.

(c) During forward acceleration applied to the structure supporting the seat as described in this paragraph, measure the maximum rearward angular displacement between the dummy torso reference line and head reference line. When graphically depicted, the magnitude of the acceleration curve shall not be less than that of a half-sine wave having the amplitude of 78 m/s² and a duration of 80 milliseconds and not more than that of a half-sine wave curve having an amplitude of 94 m/s² and a duration of 96 milliseconds.

S5.2 Compliance with S4.3(b) shall be demonstrated in accordance with the following with the head restraint in its fully extended design position:

(a) Place a test device, having the back plan dimensions and torso line (centerline of the head room probe in full back position), of the three dimensional SAE J826 manikin, at the manufacturer's recommended design seated position.

(b) Establish the displaced torso reference line by applying a rearward moment of 373 Nm moment about the

seating reference point to the seat back through the test device back pan located in (a).

(c) After removing the back pan, using a 165 mm diameter spherical head form or cylindrical head form having a 165 mm diameter in plan view and a 152 mm height in profile view, apply, perpendicular to the displaced torso reference line, a rearward initial load 64 mm below the top of the head restraint that will produce a 373 Nm moment about the seating reference point.

(d) Gradually increase this initial load to 890 N or until the seat or seat back fails, whichever occurs first.

[36 FR 22902, Dec. 2, 1971, as amended at 54 FR 39187, Sept. 25, 1989; 61 FR 27025, May 30, 1996; 63 FR 28935, May 27, 1998]

§ 571.203 Standard No. 203; Impact protection for the driver from the steering control system.

S1. *Purpose and scope.* This standard specifies requirements for steering control systems that will minimize chest, neck, and facial injuries to the driver as a result of impact.

S2. *Application.* This standard applies to passenger cars and to multipurpose passenger vehicles, trucks and buses with a gross vehicle weight rating of 4,536 kg or less. However, it does not apply to vehicles that conform to the frontal barrier crash requirements (S5.1) of Standard No. 208 (49 CFR 571.208) by means of other than seat belt assemblies. It also does not apply to walk-in vans.

S3. *Definitions. Steering control system* means the basic steering mechanism and its associated trim hardware, including any portion of a steering column assembly that provides energy absorption upon impact.

S4. *Requirements.* Each passenger car and each multipurpose passenger vehicle, truck and bus with a gross vehicle weight rating of 4,536 kg or less manufactured on or after September 1, 1981 shall meet the requirements of S5.1 and S5.2.

S5. *Impact protection requirements.*

S5.1 Except as provided in this paragraph, the steering control system of any vehicle to which this standard applies shall be impacted in accordance with S5.1(a). However, the steering control system of any such vehicle manufactured on or before August 31, 1996, may be impacted in accordance with S5.1(b).

(a) When the steering control system is impacted by a body block in accordance with SAE Recommended Practice J944 JUN80 Steering Control System—Passenger Car—Laboratory Test Procedure, at a relative velocity of 24 km/h, the impact force developed on the chest of the body block transmitted to the steering control system shall not exceed 11,120 N, except for intervals whose cumulative duration is not more than 3 milliseconds.

(b) When the steering control system is impacted in accordance with Society of Automotive Engineers Recommended Practice J944, ''Steering Wheel Assembly Laboratory Test Procedure,'' December 1965, or an approved equivalent, at a relative velocity of 24 km/h, the impact force developed on the chest of the body block transmitted to the steering control system shall not exceed 11,120 N, except for intervals whose cumulative duration is not more than 3 milliseconds.

S5.2 The steering control system shall be so constructed that no components or attachments, including horn actuating mechanisms and trim hardware, can catch the driver's clothing or jewelry during normal driving maneuvers.

NOTE: The term jewelry refers to watches, rings, and bracelets without loosely attached or dangling members.

[36 FR 22902, Dec. 2, 1971, as amended at 44 FR 68475, Nov. 29, 1979; 47 FR 47842, Oct. 28, 1982; 58 FR 26527, May 4, 1993; 58 FR 63304, Dec. 1, 1993; 63 FR 28935, May 27, 1998; 63 FR 51003, Sept. 24, 1998]

§ 571.204 Standard No. 204; Steering control rearward displacement.

S1. *Purpose and scope.* This standard specifies requirements limiting the rearward displacement of the steering control into the passenger compartment to reduce the likelihood of chest, neck, or head injury.

S2. *Application.* This standard applies to passenger cars and to multipurpose passenger vehicles, trucks, and buses. However, it does not apply to walk-in vans.

S3. *Definitions.*

Steering column means a structural housing that surrounds a steering shaft.

Steering shaft means a component that transmits steering torque from the steering wheel to the steering gear.

S4 *Requirements.*

S4.1 *Vehicles manufactured before September 1, 1991.* When a passenger car or a truck, bus, or multipurpose passenger vehicle with a gross vehicle weight rating of 10,000 pounds or less and an unloaded vehicle weight of 4,000 pounds or less is tested under the conditions of S5 in a 30 mile per hour perpendicular impact into a fixed collision barrier, the upper end of the steering column and shaft in the vehicle shall not be displaced more than 5 inches in a horizontal rearward direction parallel to the longitudinal axis of the vehicle. The amount of displacement shall be measured relative to an undisturbed point on the vehicle and shall represent the maximum dynamic movement of the upper end of the steering column and shaft during the crash test.

S4.2 *Vehicles manufactured on or after September 1, 1991.* When a passenger car or a truck, bus or multipurpose passenger vehicle with a gross vehicle weight rating of 4,536 kg or less and an unloaded vehicle weight of 2,495 kg or less is tested under the conditions of S5 in a 48 km/h perpendicular impact into a fixed collision barrier, the upper end of the steering column and shaft in the vehicle shall not be displaced more than 127 mm in a horizontal rearward direction parallel to the longitudinal axis of the vehicle. The amount of displacement shall be measured relative to an undisturbed point on the vehicle and shall represent the maximum dynamic movement of the upper end of the steering column and shaft during the crash test.

S5. *Test conditions.* The requirements of S4 shall be met when the vehicle is tested in accordance with the following conditions.

S5.1 The vehicle, including test devices and instrumentation, is loaded to its unloaded vehicle weight.

S5.2 Adjustable steering controls are adjusted so that a tilting steering wheel hub is at the geometric center of the locus it describes when it is moved through its full range of driving positions. A telescoping steering control is set at the adjustment position midway between the forwardmost and rearwardmost position.

S5.3 Convertibles and open-body type vehicles have the top, if any, in place in the closed passenger compartment configuration.

S5.4 Doors are fully closed and latched but not locked.

S5.5 The fuel tank is filled to any level from 90 to 95 percent of capacity.

S5.6 The parking brake is disengaged and the transmission is in neutral.

S5.7 Tires are inflated to the vehicle manufacturer's specifications.

[52 FR 44897, Nov. 23, 1987, as amended at 63 FR 28935, May 27, 1998; 63 FR 51003, Sept. 24, 1998]

§ 571.205 Standard No. 205, Glazing materials.

S1. *Scope.* This standard specifies requirements for glazing materials for use in motor vehicles and motor vehicle equipment.

S2. *Purpose.* The purpose of this standard is to reduce injuries resulting from impact to glazing surfaces, to ensure a necessary degree of transparency in motor vehicle windows for driver visibility, and to minimize the possibility of occupants being thrown through the vehicle windows in collisions.

S3. *Application.* This standard applies to glazing materials for use in passenger cars, multipurpose passenger vehicles, trucks, buses, motorcycles, slide-in campers, and pickup covers designed to carry persons while in motion.

S4. *Definitions.*

Bullet resistant shield means a shield or barrier that is installed completely inside a motor vehicle behind and separate from glazing materials that independently comply with the requirements of this standard.

Camper means a structure designed to be mounted in the cargo area of a truck, or attached to an incomplete vehicle with motive power, for the purpose of providing shelter for persons.

Glass-plastic glazing material means a laminate of one or more layers of glass and one or more layers of plastic in

which a plastic surface of the glazing faces inward when the glazing is installed in a vehicle.

Motor home means a multipurpose passenger vehicle that provides living accommodations for persons.

Pickup cover means a camper having a roof and sides but without a floor, designed to be mounted on and removable from the cargo area of a truck by the user.

Slide-in camper means a camper having a roof, floor, and sides, designed to be mounted on and removable from the cargo area of a truck by the user.

S5. *Requirements.*

S5.1 *Materials.*

S5.1.1 Glazing materials for use in motor vehicles, expect as otherwise provided in this standard shall conform to the American National Standard ''Safety Code for Safety Glazing Materials for Glazing Motor Vehicles Operating on Land Highways'' Z–26.1–1977, January 26, 1977, as supplemented by Z26.1a, July 3, 1980 (hereinafter referred to as ''ANS Z26''). However, Item 11B glazing as specified in that standard may not be used in motor vehicles at levels requisite for driving visibility, and Item 11B glazing is not required to pass Test Nos. 17, 30, and 31.

S5.1.1.1 The chemicals specified for testing chemical resistance in Tests Nos. 19 and 20 of ANS Z26 shall be:

(a) One percent solution of nonabrasive soap.

(b) Kerosene.

(c) Undiluted denatured alcohol, Formula SD No. 30 (1 part 100-percent methyl alcohol in 10 parts 190-proof ethyl alcohol by volume).

(d) Gasoline, ASTM Reference Fuel C, which is composed of Isooctane 50 volume percentage and Toluene 50 volume percentage. Isooctane must conform to A2.7 in Annex 2 of the Motor Fuels Section of the *1985 Annual Book of ASTM Standards*, Vol. 05.04, and Toluene must conform to ASTM Specification D362–84, *Standard Specification for Industrial Grade Toluene*. ASTM Reference Fuel C must be used as specified in:

(1) Paragraph A2.3.2 and A2.3.3 of Annex 2 of Motor Fuels, Section 1 in the *1985 Annual Book of ASTM Standards;* and

(2) OSHA Standard 29 CFR 1910.106—''Handling Storage and Use of Flammable Combustible Liquids.''

This incorporation by reference was approved by the Director of the Federal Register in accordance with 5 U.S.C. 552(a) and 1 CFR part 51. Copies may be inspected at the Technical Reference Library, NHTSA, 400 Seventh Street, SW., Room 5108, Washington, DC 20590, or at the Office of the Federal Register, 800 North Capitol Street, NW., suite 700, Washington, DC.

S5.1.1.2 The following locations are added to the lists specified in ANS Z26 in which item 4, item 5, item 8, and item 9 safety glazing may be used:

(a)–(i) [Reserved]

(j) Windows and doors in motor homes, except for the windshield and windows to the immediate right or left of the driver.

(k) Windows and doors in slide-in campers and pickup covers.

(l) Windows and doors in buses except for the windshield, windows to the immediate right or left of the driver, and rearmost windows if used for driving visibility.

(m) For Item 5 safety glazing only: Motorcycle windscreens below the intersection of a horizontal plane 380 millimeters vertically above the lowest seating position.

S5.1.1.3 The following locations are added to the lists specified in ANS Z26 in which item 6 and item 7 safety glazing may be used:

(a)–(i) [Reserved]

(j) Windows and doors in motor homes, except for the windshield, forward-facing windows, and windows to the immediate right or left of the driver.

(k) Windows, except forward-facing windows, and doors in slide-in campers and pickup covers.

(l) For item 7 safety glazing only:

(1) Standee windows in buses.

(2) Interior partitions.

(3) Openings in the roof.

S5.1.1.4 The following locations are added to the lists specified in ANS Z26 in which item 8 and item 9 safety glazing may be used:

(a)–(e) [Reserved]

(f) Windows and doors in motor homes, except for the windshield and

windows to the immediate right or left of the driver.

(g) Windows and doors in slide-in campers and pickup covers.

S5.1.1.5 The phrase ''readily removable'' windows as defined in ANS Z26, for the purposes of this standard, in buses having a GVWR of more than 4536 kilograms, shall include pushout windows and windows mounted in emergency exists that can be manually pushed out of their location in the vehicle without the use of tools, regardless of whether such windows remain hinged at one side to the vehicle.

S5.1.1.6 *Multipurpose passenger vehicles.* Except as otherwise specifically provided by this standard, glazing for use in multipurpose passenger vehicles shall conform to the requirements for glazing for use in trucks as specified in ANS Z26.

S5.1.1.7 Test No. 17 is deleted from the list of tests specified in ANS Z26 for Item 5 glazing material and Test No. 18 is deleted from the lists of tests specified in ANS Z26 for Item 3 and Item 9 glazing material.

S5.1.2 In addition to the glazing materials specified in ANS Z26, materials conforming to S5.1.2.1, S5.1.2.2, S5.1.2.3, S5.1.2.4, S5.1.2.5, S5.1.2.6, S5.1.2.7, S5.1.2.8 and S5.1.2.11 may be used in the locations of motor vehicles specified in those sections.

S5.1.2.1 *Item 11C—Safety Glazing Material for Use in Bullet Resistant Shields.* Bullet resistant glazing that complies with Test Nos. 2, 17, 19, 20, 21, 24, 27, 28, 29, 30 and 32 of ANS Z26 and the labeling requirements of S5.1.2.5 may be used only in bullet resistant shields that can be removed from the motor vehicle easily for cleaning and maintenance. A bullet resistant shield may be used in areas requisite for driving visibility only if the combined parallel luminous transmittance with perpendicular incidence through both the shield and the permanent vehicle glazing is at least 60 percent.

S5.1.2.2 *Item 12—Rigid Plastics.* Safety plastics materials that comply with Test Nos. 10, 13, 16, 19, 20, 21 and 24 of ANS Z26, with the exception of the test for resistance to undilated denatured alcohol Formula SD No. 30, and that comply with the labeling requirements of S5.1.2.5, may be used in a motor vehicle only in the following specified locations at levels not requisite for driving visibility.

(a) Window and doors in slide-in campers and pick-up covers.

(b) Motorcycle windscreens below the intersection of a horizontal plane 380 millimeters vertically above the lowest seating position.

(c) Standee windows in buses.

(d) Interior partitions.

(e) Openings in the roof.

(f) Flexible curtains or readily removable windows or in ventilators used in conjunction with readily removable windows.

(g) Windows and doors in motor homes, except for the windshield and windows to the immediate right or left of the driver.

(h) Windows and doors in buses except for the windshield and window to the immediate right and left of the driver.

S5.1.2.3 *Item 13—Flexible plastics.* Safety plastic materials that comply with Tests Nos. 16, 19, 20, 22, and 23 or 24 of ANS Z26, with the exception of the test for resistance to undiluted denatured alcohol Formula SD No. 30, and that comply with the labeling requirements of S5.1.2.5 may be used in the following specific locations at levels not requisite for driving visibility.

(a) Windows, except forward-facing windows, and doors in slide-in campers and pick-up covers.

(b) Motorcycle windscreens below the intersection of a horizontal plane 380 millimeters vertically above the lowest seating position.

(c) Standee windows in buses.

(d) Interior partitions.

(e) Openings in the roof.

(f) Flexible curtains or readily removable windows or in ventilators used in conjunction with readily removable windows.

(g) Windows and doors in motor homes, except for the windshield, forward-facing windows, and windows to the immediate right or left of the driver.

S5.1.2.4. Item 14—*Glass Plastics.* Glass-plastic glazing materials that comply with the labeling requirements of S5.1.2.10 and Test Nos. 1, 2, 3, 4, 9, 12, 15, 16, 17, 18, 19, 24, 26, and 28, as those

tests are modified in S5.1.2.9, *Test Procedures for Glass-Plastics*, may be used anywhere in a motor vehicle, except that it may not be used in windshields of any of the following vehicles: convertibles, vehicles that have no roof, vehicles whose roofs are completely removable.

S5.1.2.5. *Item 15A—Annealed Glass-Plastic for use in all Positions in a Vehicle Except the Windshield*. Glass-plastic glazing materials that comply with Test Nos. 1, 2, 3, 4, 9, 12, 16, 17, 18, 19, 24, and 28, as those tests are modified in S5.1.2.9 *Test Procedures for Glass-Plastics*, may be used anywhere in a motor vehicle except the windshield.

S5.1.2.6 *Item 15B—Tempered Glass-Plastic for Use in All Positions In a Vehicle Except the Windshield*. Glass-plastic glazing materials that comply with Tests Nos. 1, 2, 3, 4, 6, 7, 8, 16, 17, 18, 19, 24, and 28, as those tests are modified in S5.1.2.9 *Test Procedures for Glass-Plastics*, may be used anywhere in a motor vehicle except the windshield.

S5.1.2.7. *Item 16A—Annealed Glass-Plastic for Use in all Positions in a Vehicle not Requisite for Driving Visibility*. Glass-plastic glazing materials that comply with Test Nos. 3, 4, 9, 12, 16, 19, 24, and 28, as those tests are modified in S5.1.2.9 *Test Procedures for Glass-Plastics*, may be used in a motor vehicle in all locations not requisite for driving visibility.

S5.1.2.8. *Item 16B—Tempered Glass-Plastic for Use in all Positions in a Vehicle not Requisite for Driving Visibility*. Glass-plastic glazing materials that comply with Test Nos. 3, 4, 6, 7, 8, 16, 19, 24, and 28, as those tests are modified in S5.1.2.9 *Test Procedures for Glass-Plastics*, may be used in a motor vehicle in all locations not requisite for driving visibility.

S5.1.2.9 *Test Procedures for Glass-Plastics*. (a) Tests Nos. 6, 7, 8, 9, 12, 16, and 18 shall be conducted on the glass side of the specimen, i.e., the surface which would face the exterior of the vehicle. Tests Nos. 17, 19, 24, and 26 shall be conducted on the plastic side of the specimen, i.e., the surface which would face the interior of the vehicle. Test No. 15 should be conducted with the glass side of the glazing facing the illuminated box and the screen, respectively. For Test No. 19, add the following to the specified list: an aqueous solution of isopropanol and glycol ether solvents in concentration no greater than 10% or less than 5% by weight and ammonium hydroxide no greater than 5% or less than 1% by weight, simulating typical commercial windshield cleaner.

(b) Glass-plastic specimens shall be exposed to an ambient air temperature of −40 degrees Celsius (plus or minus 5 degrees Celsius), for a period of 6 hours at the commencement of Test No. 28, rather than at the initial temperature specified in that test. After testing, the glass-plastic specimens shall show no evidence of cracking, clouding, delaminating, or other evidence of deterioration.

(c) Glass-plastic specimens tested in accordance with Test No. 17 shall be carefully rinsed with distilled water following the abrasion procedure and wiped dry with lens paper. After this procedure, the arithmetic means of the percentage of light scattered by the three specimens as a result of abrasion shall not exceed 4.0 percent.

(d) Data obtained from Test No. 1 should be used when conducting Test No. 2.

(e)(1) Except as provided in S5.1.2.9(e)(2), glass-plastic glazing specimens tested in accordance with Test Nos. 9, 12 and 26 shall be clamped in the test fixture in Figure 1 of this standard in the manner shown in that figure. The clamping gasket shall be made of rubber 3 millimeters (mm) thick of hardness 50 IRHD (International Rubber Hardness Degrees), plus or minus five degrees. Movement of the test specimen, measured after the test, shall not exceed 2 mm at any point along the inside periphery of the fixture. Movement of the test specimen beyond the 2 mm limit shall be considered an incomplete test, not a test failure. A specimen used in such an incomplete test shall not be retested.

(2) At the option of the manufacturer, glass-plastic glazing specimens tested in accordance with Test Nos. 9 and 12 may be tested unclamped. Such specimens shall be tested using the fixture in Figure 1 of the standard, including the upper frame (unclamped) which holds the specimen in place.

S5.1.2.10 *Cleaning instructions.* (a) Each manufacturer of glazing materials designed to meet the requirements of S5.1.2.1, S5.1.2.2, S5.1.2.3, S5.1.2.4, S5.1.2.5, S5.1.2.6, S5.1.2.7, S5.1.2.8, or S5.1.2.11 shall affix a label, removable by hand without tools, to each item of glazing materials. The label shall identify the product involved, specify instructions and agents for cleaning the material that will minimize the loss of transparency, and instructions for removing frost and ice, and, at the option of the manufacturer, refer owners to the vehicle's Owners Manual for more specific cleaning and other instructions.

(b) Each manufacturer of glazing materials designed to meet the requirements of paragraphs S5.1.2.4, S5.1.2.5, S5.1.2.6, S5.1.2.7, or S5.1.2.8 may permanently and indelibly mark the lower center of each item of such glazing material, in letters not less than 4.5 millimeters nor more than 6 millimeters high, the following words, GLASS PLASTIC MATERIAL—SEE OWNER'S MANUAL FOR CARE INSTRUCTIONS.

S5.1.2.11 *Test procedures for Item 4A—Rigid Plastic for Use in Side Windows Rearward of the ''C'' pillar.* (a) Glazing materials that comply with Tests Nos. 2, 10, 13, 16, 17, as that test is modified in S5.1.2.9(c) (on the interior side only), 17, as that test is modified in paragraph (b) of this section (on the exterior side only), 19, 20, 21, and 24 of ANS Z26.1, may be used in the following specific locations:

(1) All areas in which Item 4 safety glazing may be used.

(2) Any side window that meets the criteria in S5.1.2.11(a)(2)(i) and (ii):

(i) Is in a vehicle whose rearmost designated seating position is forward-facing and cannot be adjusted so that it is side or rear-facing; and

(ii) The forwardmost point on its visible interior surface is rearward of the vertical transverse plane that passes through the shoulder reference point (as described in Figure 1 of § 571.210 *Seat belt assembly anchorages*) of that rearmost seating position.

(b)(1) The initial maximum haze level shall not exceed 1.0 percent. The specimens are subjected to abrasion for 100 cycles and then carefully wiped with dry lens paper (or its equivalent). The light scattered by the abraded track is measured in accordance with Test 17. The arithmetic mean of the percentages of light scattered by the three specimens shall not exceed 4.0 percent after being subjected to abrasion for 100 cycles.

(2) The specimen is remounted on the specimen holder so that it rotates substantially in a plane and subjected to abrasion for an additional 400 cycles on the same track already abraded for 100 cycles. Specimens are carefully wiped after abrasion with dry lens paper (or its equivalent). The light scattered by the abraded track is then measured as specified in Test 17. The arithmetic mean of the percentages of light scattered by the three specimens shall not exceed 10.0 percent after being subjected to abrasion for 500 cycles.

S5.2 *Edges.* In vehicles except schoolbuses, exposed edges shall be treated in accordance with SAE Recommended Practice J673a, ''Automotive Glazing'', August 1967. In schoolbuses, exposed edges shall be banded.

S6. *Certification and marking.*

S6.1 Each prime glazing material manufacturer, except as specified below, shall mark the glazing materials it manufactures in accordance with section 6 of ANS Z26. The materials specified in S5.1.2.1, S5.1.2.2, S5.1.2.3, S5.1.2.4, S5.1.2.5, S5.1.2.6, S5.1.2.7, S5.1.2.8, and S5.1.2.11 shall be identified by the marks ''AS 11C'', ''AS 12'', ''AS 13'', ''AS 14'', ''AS 15A'', ''AS 15B'', ''AS 16A'', ''AS 16B'', and ''AS 4A'', respectively. A prime glazing material manufacturer is one which fabricates, laminates, or tempers the glazing material.

S6.2 Each prime glazing material manufacturer shall certify each piece of glazing material to which this standard applies that is designed as a component of any specific motor vehicle or camper, pursuant to section 114 of the National Traffic and Motor Vehicle Safety Act of 1966, by adding to the mark required by S6.1 in letters and numerals of the size specified in section 6 of ANS Z26, the symbol ''DOT'' and a manufacturer's code mark, which will be assigned by the NHTSA on the written request of the manufacturer.

S6.3 Each prime glazing material manufacturer shall certify each piece of glazing material to which this standard applies that is designed to be cut into components for use in motor vehicles or items of motor vehicle equipment, pursuant to section 114 of the National Traffic and Motor Vehicle Safety Act.

S6.4 Each manufacturer or distributor who cuts a section of glazing material to which this standard applies, for use in a motor vehicle or camper, shall mark that material in accordance with section 6 of ANS Z26.

S6.5 Each manufacturer or distributor who cuts a section of glazing material to which this standard applies, for use in a motor vehicle or camper, shall certify that his product complies with this standard in accordance with section 114 of the National Traffic and Motor Vehicle Safety Act.

Dimensions in millimeters

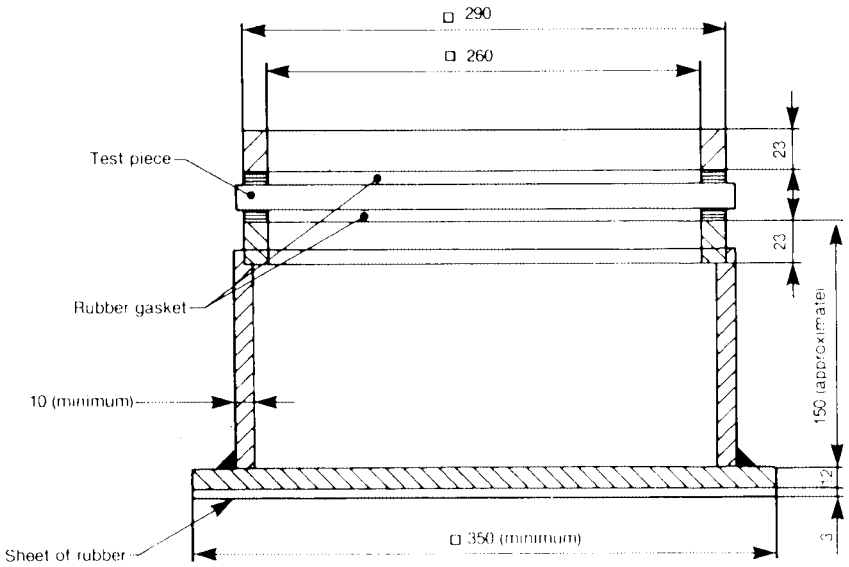

Figure 1 — Test Fixture For Clamped Specimens

[37 FR 12239, June 21, 1972, as amended at 37 FR 13097, July 1, 1972; 37 FR 24036, Nov. 11, 1972; 37 FR 24826, Nov. 22, 1972; 42 FR 61466, Dec. 5, 1977; 45 FR 47151, July 14, 1980; 46 FR 43690, Aug. 31, 1981; 48 FR 52065, Nov. 16, 1983; 49 FR 6734, Feb. 23, 1984; 56 FR 12674, Mar. 27, 1991; 56 FR 18531, Apr. 23, 1991; 56 FR 49149, Sept. 27, 1991; 57 FR 1654, Jan. 15, 1992; 57 FR 13656, Apr. 17, 1992; 57 FR 30164, July 8, 1992; 57 FR 58150, Dec. 9, 1992; 60 FR 13646, Mar. 14, 1995; 61 FR 41743, Aug. 12, 1996]

§571.206 Standard No. 206; Door locks and door retention components.

S1. *Purpose and Scope.* This standard specifies requirements for door locks and door retention components including latches, hinges, and other supporting means, to minimize the likelihood of occupants being thrown from the vehicle as a result of impact.

S2. *Application.* This standard applies to passenger cars, multipurpose passenger vehicles, and trucks.

S3. *Definitions.*

Auxiliary door latch means a latch or latches, other than the primary latch or latches, fitted to a back door or back door system that is equipped with more than one latch.

Back door means a door or door system on the back end of a motor vehicle through which passengers can enter or depart the vehicle, or cargo can be loaded or unloaded; but does not include:

(a) A trunk lid; or

(b) A door or window that is composed entirely of glazing material and whose latches and/or hinges are attached directly onto the glazing material.

Cargo-Type Door means a door designed primarily to accommodate cargo loading including, but not limited to, a two-part door that latches to itself.

Fork-bolt means the part of the door latch that engages the striker when in a latched position.

Fork-bolt opening means the direction opposite to that in which the striker enters to engage the fork-bolt.

Primary door latch means, with respect to a back door or back door system, the latch or latches equipped with both the fully latched position and the secondary latched position.

Side front door means a door that in a side view, has 50 percent or more of its opening area forward of the rearmost point on the driver's seatback, when the driver's seat is adjusted to its most vertical and rearward position.

Side rear door means a door that, in a side view, has more than 50 percent of its opening area to the rear of the rearmost point on the driver's seatback, when the driver's seat is adjusted to its most vertical and rearward position.

Trunk lid means a movable body panel that provides access from outside the vehicle to a space wholly partitioned from the occupant compartment by a permanently attached partition or a fixed or fold-down seat back.

S4. *Requirments.*

(a) *Components on side doors.* Components on any side door that leads directly into a compartment that contains one or more seating accommodations shall conform to this standard.

(b) *Components on back doors.* Components on any back door of a passenger car or multipurpose passenger vehicle with a gross vehicle weight rating (GVWR) of 4,536 kilograms (10,000 pounds) or less that leads directly into a compartment that contains one or more seating accommodations shall conform to this standard, subject to the following compliance schedule:

(1)(i) For those affected passenger cars and multipurpose passenger vehicles manufactured on or after September 1, 1997, and before September 1, 1998, the amount of such vehicles complying with this standard shall be not less than 60 percent of the combined total production of passenger cars and multipurpose passenger vehicles, based on:

(A) The manufacturer's average annual production of such vehicles manufactured on or after September 1, 1996 and before September 1, 1998; or

(B) The manufacturer's production of such vehicles on or after September 1, 1997 and before September 1, 1998.

(ii) For calculating average annual production of affected passenger cars and multipurpose passenger vehicles for each manufacturer and the number of such vehicles manufactured by each manufacturer, a vehicle produced by more than one manufacturer shall be attributed to a single manufacturer as follows:

(A) A vehicle that is imported shall be attributed to the importer;

(B) A vehicle manufactured in the United States by more than one manufacturer, one of which also markets the vehicle, shall be attributed to the manufacturer that markets the vehicle.

(C) A vehicle produced by more than one manufacturer shall be attributed to any one of the vehicle's manufacturers specified by an express written contract between the manufacturer so specified and the manufacturer to which the vehicle would otherwise be attributed under paragraph (b)(1)(ii)(A) or (B) of this section.

(2) Components on the back doors of affected passenger cars and multipurpose passenger vehicles manufactured on and after September 1, 1998 shall conform to all applicable requirements of this standard.

(c) Components on folding doors, roll-up doors, doors that are designed to be easily attached to or detached from motor vehicles manufactured for operation without doors, and doors that are equipped with the wheelchair lifts and that are linked to an alarm system consisting of either a flashing visible signal located in the driver's compartment or an alarm audible to the driver that is activated when the door is open, need not conform to this standard.

(d) A particular latch or hinge assembly utilized as a test specimen need not meet further requirements after having been subjected to and having met any one of the requirements of S4 or S5.1 through S5.4.

S4.1 *Hinged Side Doors, Except Cargo-Type Doors.*

S4.1.1 *Door Latches.* Each door latch and striker assembly shall be provided with two positions consisting of—

(a) A fully latched position; and

(b) A secondary latched position.

S4.1.1.1 *Longitudinal Load.* The door latch and striker assembly, when in the fully latched position, shall not separate when a longitudinal load of 11,000 Newtons (2,500 pounds) is applied. When in the secondary latched position, the door latch and striker assembly shall not separate when a longitudinal load of 4,450 Newtons (1,000 pounds) is applied.

S4.1.1.2 *Transverse Load.* The door latch and striker assembly, when in the fully latched position, shall not separate when a transverse load of 8,900 Newtons (2,000 pounds) is applied. When in the secondary latched position, the door latch and striker assembly shall not separate when a transverse load of 4,450 Newtons (1,000 pounds) is applied.

S4.1.1.3 *Inertia Load.* The door latch shall not disengage from the fully latched position when a longitudinal or transverse inertia load of 30g is applied to the door latch system (including the latch and its actuating mechanism with the locking mechanism disengaged).

S4.1.2 *Door Hinges.* Each door hinge system shall support the door and shall not separate when a longitudinal load of 11,000 Newtons (2,500 pounds) is applied. Similarly, each door hinge system shall not separate when a transverse load of 8,900 Newtons (2,000 pounds) is applied.

S4.1.3 *Door Locks.* Each door shall be equipped with a locking mechanism with an operating means in the interior of the vehicle.

S4.1.3.1 *Side Front Door Locks.* When the locking mechanism is engaged, the outside door handle or other outside latch release control shall be inoperative.

S4.1.3.2 *Side Rear Door Locks.* In passenger cars and multipurpose passenger vehicles, when the locking mechanism is engaged both the outside and inside door handles or other latch release controls shall be inoperative.

S4.2 *Hinged Cargo-Type Side Doors.*

S4.2.1 *Door Latches.*

S4.2.1.1 *Longitudinal Load.* Each latch system, when in the latched position, shall not separate when a longitudinal load of 11,000 Newtons (2,500 pounds) is applied.

S4.2.1.2 *Transverse Load.* Each latch system, when in the latched position, shall not separate when a transverse load of 8,900 Newtons (2,000 pounds) is applied. When more than one latch system is used on a single door, the load requirement may be divided among the total number of latch systems.

S4.2.2 *Door Hinges.* Each door hinge system shall support the door and shall not separate when a longitudinal load of 11,000 Newtons (2,500 pounds) is applied, and when a transverse load of 8,900 Newtons (2,000 pounds) is applied.

S4.3 *Sliding Side Doors.* The track and slide combination or other supporting means for each sliding door shall not separate when a total transverse load of 17,800 Newtons (4,000 pounds) is applied, with the door in the closed position.

S4.4. *Hinged Back Doors.*

S4.4.1 *Door Latches.* Each back door system shall be equipped with at least one primary latch and striker assembly.

S4.4.1.1 *Load Test One.* The primary door latch and striker assembly, when in the fully latched position, shall not separate when a load of 11,000 Newtons (2,500 pounds) is applied in the direction perpendicular to the face of the latch (corresponding to the longitudinal load test for side door latches)

such that the latch and the striker anchorage are not compressed against each other. When in the secondary latched position, the primary latch and striker assembly shall not separate when a load of 4,450 Newtons (1,000 pounds) is applied in the same direction.

S4.4.1.2 *Load Test Two*. The primary door latch and striker assembly, when in the fully latched position, shall not separate when a load of 8,900 Newtons (2,000 pounds) is applied in the direction of the fork-bolt opening and parallel to the face of the latch (corresponding to the transverse load test). Figure 1 depicts the loading direction for this test. When in the secondary latched position, the primary latch and striker assembly shall not separate when a load of 4,450 Newtons (1,000 pounds) is applied in the same direction.

S4.4.1.3 *Load Test Three*. The primary door latch and striker assembly on back doors equipped with a latch and striker assembly at the bottom of the door and that open upward shall not disengage from the fully latched position when a load of 8,900 Newtons (2,000 pounds) is applied in a direction orthogonal to the directions specified in S4.4.1.1 and S4.4.1.2 above.

S4.4.1.4 *Inertia Load*. The primary door latch shall not disengage from the fully latched position when an inertia load of 30g is applied to the door latch system, including the latch and its activation mechanism with the locking mechanism disengaged, in the directions specified in S4.4.1.1, S4.4.1.2, and S4.4.1.3.

S4.4.1.5 *Auxiliary Door Latches*. Each auxiliary back door latch and striker assembly shall be provided with a fully latched position and shall comply with the requirements specified in S4.4.1.1, S4.4.1.2, and S4.4.1.4.

S4.4.2 *Door Locks*. Each back door system equipped with interior door handles or that leads directly into a compartment that contains one or more seating accommodations shall be equipped with a locking mechanism with operating means in both the interior and exterior of the vehicle. When the locking mechanism is engaged, both the inside and outside door handles or other latch release controls shall be inoperative.

S4.4.3 *Door Hinges*.

S4.4.3.1 *Load Test One*. Each back door hinge system shall support the door and shall not separate when a load of 11,000 Newtons (2,500 pounds) is applied perpendicular to the hinge face plate (longitudinal load test) such that the hinge plates are not compressed against each other.

S4.4.3.2 *Load Test Two*. Each back door hinge system shall not separate when a load of 8,900 Newtons (2,000 pounds) is applied perpendicular to the axis of the hinge pin and parallel to the hinge face plate (transverse load test) such that the hinge plates are not compressed against each other.

S4.4.3.3 *Load Test Three*. Each hinge system on back doors that open upward shall not separate when a load of 8,900 Newtons (2,000 pounds) is applied in the direction of the axis of the hinge pin.

S4.5 *Sliding Back Doors*. The track and slide combination or other supporting means for each sliding door shall not separate when a total longitudinal load of 17,800 Newtons (4,000 pounds) is applied, with the door in the closed position.

S5.1 *Hinged Side Doors, Except Cargo-Type Doors*.

S5.1.1 *Door Latches*.

S5.1.1.1 *Longitudinal and Transverse Loads*. Compliance with paragraphs S4.1.1.1 and S4.1.1.2 shall be demonstrated in accordance with paragraph 5 of Society of Automotive Engineers Recommended Practice J839, *Passenger Car Side Door Latch Systems*, June 1991.

S5.1.1.2 *Inertia Load*. Compliance with S4.1.1.3 shall be demonstrated by approved tests or in accordance with paragraph 6 of Society of Automotive Engineers Recommended Practice J839, *Passenger Car Side Door Latch Systems*, June 1991.

S5.1.2 *Door Hinges*. Compliance with S4.1.2 shall be demonstrated in accordance with paragraph 4 or 5, as appropriate, of Society of Automotive Engineers Recommended Practice J934, *Vehicle Passenger Door Hinge Systems*, July 1982. For piano-type hinges, the hinge spacing requirements of SAE J934 shall not be applicable and arrangement of the test fixture shall be

altered as required so that the test load will be applied to the complete hinge.

S5.2 *Hinged Cargo-Type Side Doors.*

S5.2.1 *Door Latches.* Compliance with S4.2.1 shall be demonstrated in accordance with paragraphs 5.1 and 5.3, SAE Recommended Practice J839, *Passenger Car Side Door Latch Systems,* June 1991. An equivalent static test fixture may be substituted for that shown in Figure 2 of SAE J839, if required.

S5.2.2 *Door Hinges.* Compliance with S4.2.2 shall be demonstrated in accordance with paragraph 4 or 5, as appropriate, of SAE Recommended Practice J934, *Vehicle Passenger Door Hinge Systems,* July 1982. For piano-type hinges, the hinge spacing requirement of SAE J934 shall not be applicable and arrangement of the test fixture shall be altered as required so that the test load will be applied to the complete hinge.

S5.3 *Sliding Side Doors.* Compliance with S4.3 shall be demonstrated by applying an outward transverse load of 8,900 Newtons (2,000 pounds) to the load-bearing members at the opposite edges of the door (17,800 Newtons (4,000 pounds) total). The demonstration may be performed either in the vehicle or with the door retention components in a bench test fixture.

S5.4 *Hinged Back Doors.*

S5.4.1.1 *Load Tests One, Two, and Three.* Compliance with S4.4.1.1, S4.4.1.2, and S4.4.1.3 shall be demonstrated in the same manner as specified in S5.1.1.1, except that the loads shall be in the directions specified in S4.4.1.1, S4.4.1.2, and S4.4.1.3. The same test device may be used for Load Tests Two and Three.

S5.4.1.2 *Inertia Load.* Compliance with S4.4.1.4 shall be demonstrated in the same manner as specified in S5.1.1.2.

S5.4.2 *Door Hinges.* Compliance with S4.4.3.1, S4.4.3.2, and S4.4.3.3 shall be demonstrated in the same manner as specified in S5.1.2, except that the loads shall be in the directions specified in S4.4.3.1, S4.4.3.2, and S4.4.3.3. The same test device may be used for Load Tests Two and Three.

S5.5 *Sliding Back Doors.* Compliance with S4.5 shall be demonstrated by applying an outward longitudinal load of 8,900 Newtons (2,000 pounds) to the load bearing members at the opposite edges of the door (17,000 Newtons (4,000 pounds) total). The demonstration may be performed either in the vehicle or with the door retention components in a bench test fixture.

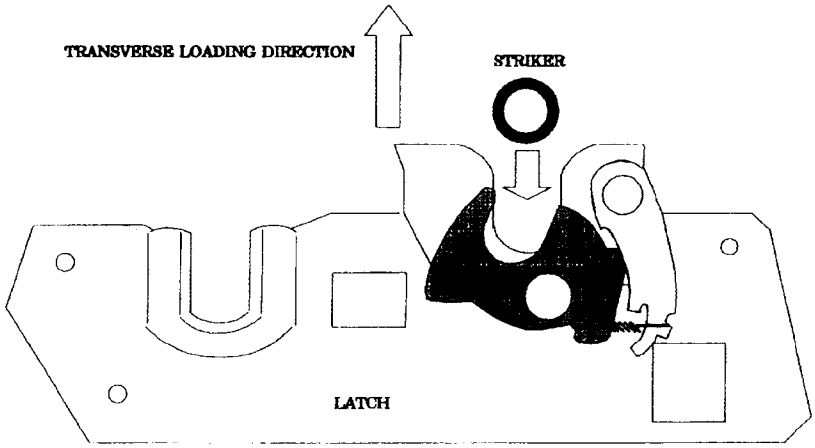

Figure 1.- Top View of a Typical Back Door Latch

[36 FR 22902, Dec. 2, 1971, as amended at 37 FR 284, Jan. 8, 1972; 50 FR 12031, Mar. 27, 1985; 60 FR 13646, Mar. 14, 1995; 60 FR 50134, Sept. 28, 1995; 61 FR 39907, July 31, 1996]

§ 571.207 Standard No. 207; Seating systems.

S1. *Purpose and scope.* This standard establishes requirements for seats, their attachment assemblies, and their installation to minimize the possibility of their failure by forces acting on them as a result of vehicle impact.

S2. *Application.* This standard applies to passenger cars, multipurpose passenger vehicles, trucks and buses.

S3. *Definitions. Occupant seat* means a seat that provides at least one designated seating position.

Seat adjuster means the part of the seat that provides forward and rearward positioning of the seat bench and back, and/or rotation around a vertical axis, including any fixed portion, such as a seat track. In the case of a seat equipped with seat adjusters at different levels, the term means the uppermost seat adjuster.

S4. *Requirements.*

S4.1 *Driver's seat.* Each vehicle shall have an occupant seat for the driver.

S.4.2 *General performance requirements.* When tested in accordance with S5., each occupant seat, other than a side-facing seat or a passenger seat on a bus, shall withstand the following forces, in newtons.

(a) In any position to which it can be adjusted—20 times the mass of the seat in kilograms multiplied by 9.8 applied in a forward longitudinal direction;

(b) In any position to which it can be adjusted—20 times the mass of the seat in kilograms multiplied by 9.8 applied in a rearward longitudinal direction;

(c) For a seat belt assembly attached to the seat—the force specified in paragraph (a), if it is a forward facing seat, or paragraph (b), if it is a rearward facing seat, in each case applied simultaneously with the forces imposed on the seat by the seat belt assembly when it is loaded in accordance with S4.2 of § 571.210; and

(d) In its rearmost position—a force that produces a 373 newton meters moment about the seating reference point for each designated seating position that the seat provides, applied to the upper cross-member of the seat back or the upper seat back, in a rearward longitudinal direction for forward-facing seats and in a forward longitudinal direction for rearward-facing seats.

S4.2.1 *Seat adjustment.* Except for vertical movement of nonlocking suspension type occupant seats in trucks or buses, each seat shall remain in its adjusted position when tested in accordance with the test procedures specified in S5.

S4.3. *Restraining device for hinged or folding seats or seat backs.* Except for a passenger seat in a bus or a seat having a back that is adjustable only for the comfort of its occupants, a hinged or folding occupant seat or occupant seat back shall—

(a) Be equipped with a self-locking device for restraining the hinged or folding seat or seat back, and

(b) If there are any designated seating positions or auxiliary seating accommodations behind the seat, either immediately to the rear or to the sides, be equipped with a control for releasing that restraining device.

S4.3.1 *Accessibility of release control.* If there is a designated seating position immediately behind a seat equipped with a restraining device, the control for releasing the device shall be readily accessible to the occupant of the seat equipped with the device and, if access to the control is required in order to exit from the vehicle, to the occupant of the designated seating position immediately behind the seat.

S4.3.2 *Performance of restraining device.*

S4.3.2.1 *Static force.* (a) Once engaged, the restraining device for a forward-facing seat shall not release or fail when a forward longitudinal force, in newtons, equal to 20 times the mass of the hinged or folding portion of the seat in kilograms multiplied by 9.8 is applied through the center of gravity of that portion of the seat.

(b) Once engaged, the restraining device for a rearward-facing seat shall not release or fail when a rearward longitudinal force, in newtons, equal to 8 times the mass of the hinged or folding portion of the seat in kilograms multiplied by 9.8 is applied through the center of gravity of that portion of the seat.

S4.3.2.2 *Acceleration.* Once engaged, the restraining device shall not release or fail when the device is subjected to

an acceleration of 20 g., in the longitudinal direction opposite to that in which the seat folds.

S4.4 *Labeling.* Seats not designated for occupancy while the vehicle is in motion shall be conspicuously labeled to that effect.

S5. *Test procedures.*

S5.1 Apply the forces specified in S4.2(a) and S4.2(b) as follows:

S5.1.1 *For a seat whose seat back and seat bench are attached to the vehicle by the same attachments.* (a) For a seat whose seat back and seat bench are attached to the vehicle by the same attachments and whose height is adjustable, the loads are applied when the seat is in its highest adjustment position in accordance with the procedure or procedures specified in S5.1.1(a)(1), S5.1.1(a)(2), or S5.1.1(a)(3), as appropriate.

(1) For a seat whose center of gravity is in a horizontal plane that is above the seat adjuster or that passes through any part of the adjuster, use, at the manufacturer's option, either S5.1.1(b) or, if physically possible, S5.1.1(c).

(2) For a seat specified in S5.1.1(a)(1) for which it is not physically possible to follow the procedure in S5.1.1(c), use S5.1.1(b).

(3) For a seat whose center of gravity is in a horizontal plane that is below the seat adjuster, use S5.1.1(c).

(4) For all other seats whose seat back and seat bench are attached to the vehicle by the same attachments, use S5.1.1(b).

(b) Secure a strut on each side of the seat from a point on the outside of the seat frame in the horizontal plane of the seat's center of gravity to a point on the frame as far forward as possible of the seat anchorages. Between the upper ends of the struts attach a rigid cross-member, in front of the seat back frame for rearward loading and behind the seat back frame for forward loading. Apply the force specified by S4.2(a) or S4.2(b) horizontally through the rigid cross-member as shown in Figure 1.

(c) Find ''cg_1,'' the center of gravity of the portion of the seat that is above the lowest surface of the seat adjuster. On each side of the seat, secure a strut from a point on the outside of the seat frame in the horizontal plane of cg_1 to a point on the frame as far forward as possible of the seat adjusted position. Between the upper ends of the struts attach a rigid cross-member, in front of the seat back frame for rearward loading and behind the seat back frame for forward loading. Find ''cg_2,'' the center of gravity of the portion of the seat that is below the seat adjuster. Apply a force horizontally through cg_1 equal to 20 times the weight of the portion of the seat represented by cg_1, and simultaneously apply a force horizontally through cg_2 equal to 20 times the weight of the portion of the seat represented by cg_2.

S5.1.2 If the seat back and the seat bench are attached to the vehicle by different attachments, attach to each component a fixture capable of transmitting a force to that component. Apply forces, in newtons, equal to 20 times the mass of the seat back in kilograms multiplied by 9.8 m/s^2 horizontally through the center of gravity of the seat back, as shown in Figure 2 and apply forces, in newtons, equal to 20 times the mass of the seat bench in kilograms multiplied by 9.8 m/s^2 horizontally through the center of gravity of the seat bench, as shown in Figure 3.

S5.2 Develop the moment specified in S4.2(d) as shown in Figure 4.

S5.3 Apply the forces specified in S4.3.2.1(a) and (b) to a hinged or folding seat as shown in Figure 1 and to a hinged or folding seat back as shown in Figure 5.

S5.4 Determine the center of gravity of a seat or seat component with all cushions and upholstery in place and with the head restraint in its fully extended design position.

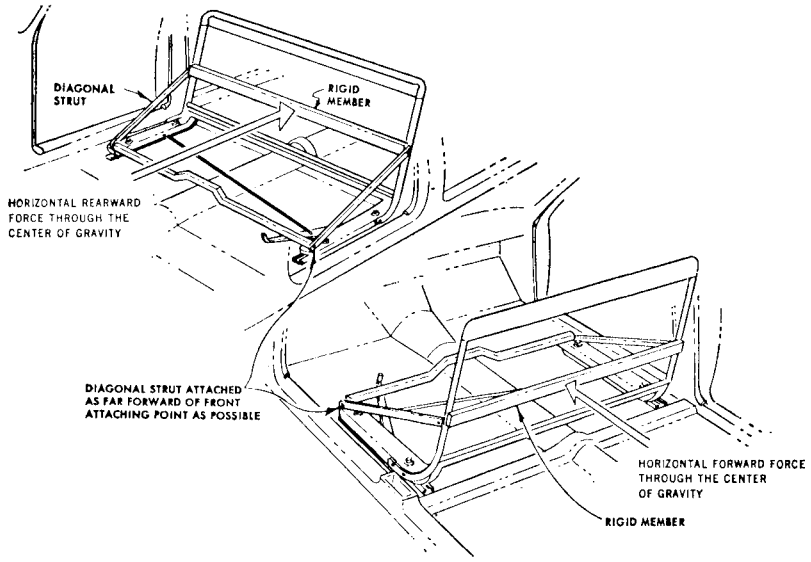

FIGURE 1

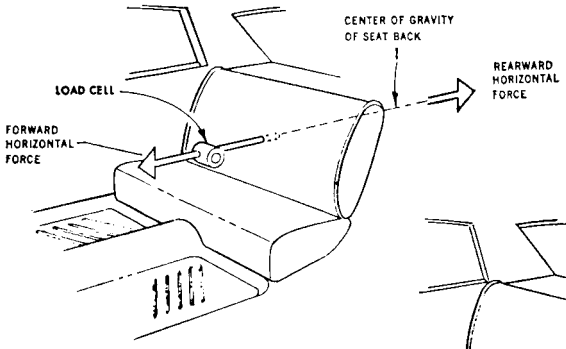

FIGURE 2

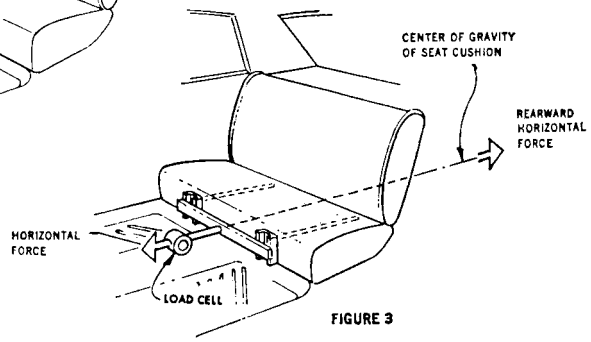

FIGURE 3

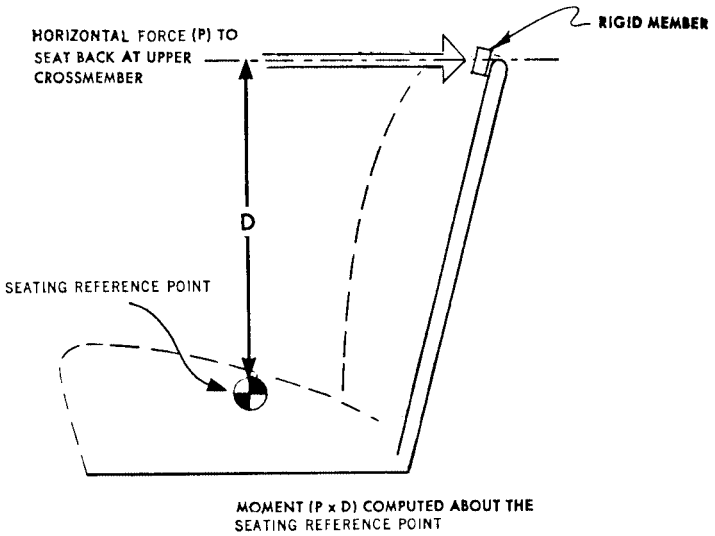

FIGURE 4

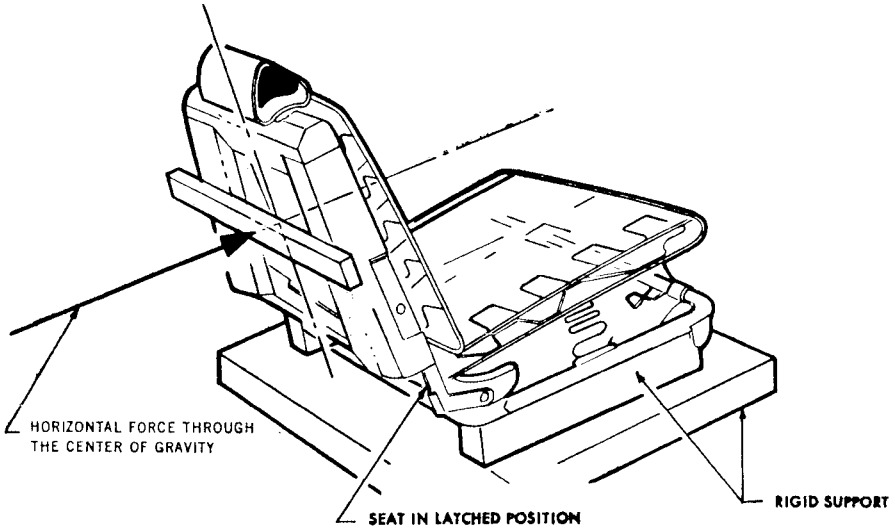

FIGURE 5

[36 FR 22902, Dec. 2, 1971, as amended at 52 FR 7868, Mar. 13, 1987; 53 FR 30434, Aug. 12, 1988; 59 FR 37167, July 21, 1994; 60 FR 13647, Mar. 14, 1995; 63 FR 28935, May 27, 1998]

§ 571.208 Standard No. 208; Occupant crash protection.

S1. *Scope.* This standard specifies performance requirements for the protection of vehicle occupants in crashes.

S2. *Purpose.* The purpose of this standard is to reduce the number of deaths of vehicle occupants, and the severity of injuries, by specifying vehicle crashworthiness requirements in terms

of forces and accelerations measured on anthropomorphic dummies in test crashes, and by specifying equipment requirements for active and passive restraint systems.

S3. *Application.* (a) This standard applies to passenger cars, multipurpose passenger vehicles, trucks, and buses. In addition, S9, *Pressure vessels and explosive devices*, applies to vessels designed to contain a pressurized fluid or gas, and to explosive devices, for use in the above types of motor vehicles as part of a system designed to provide protection to occupants in the event of a crash.

(b) Notwithstanding any language to the contrary, any vehicle manufactured after March 19, 1997, and before September 1, 2006, that is subject to a dynamic crash test requirement conducted with unbelted dummies may meet the requirements specified in S5.1.2(a)(1), S5.1.2(a)(2), or S13 instead of the applicable unbelted requirement, unless the vehicle is certified to meet the requirements specified in S14.5, S15, S17, S19, S21, S23, and S25.

(c) For vehicles which are certified to meet the requirements specified in S13 instead of the otherwise applicable dynamic crash test requirement conducted with unbelted dummies, compliance with S13 shall, for purposes of Standards No. 201, 203 and 209, be deemed as compliance with the unbelted frontal barrier requirements of S5.1.2.

S4. *General requirements.*

S4.1 *Passenger cars.*

S4.1.1 *Passenger cars manufactured from January 1, 1972, to August 31, 1973.* Each passenger car manufactured from January 1, 1972, to August 31, 1973, inclusive, shall meet the requirements of S4.1.1.1, S4.1.1.2, or S4.1.1.3. A protection system that meets the requirements of S4.1.1.1, or S4.1.1.2 may be installed at one or more designated seating positions of a vehicle that otherwise meets the requirements of S4.1.1.3.

S4.1.1.1 *First option—complete passive protection system.* The vehicle shall meet the crash protection requirements of S5. by means that require no action by vehicle occupants.

S4.1.1.2 *Second option—lap belt protection system with belt warning.* The vehicle shall—

(a) At each designated seating position have a Type 1 seatbelt assembly or a Type 2 seatbelt assembly with a detachable upper torso portion that conforms to S7.1 and S7.2 of this standard;

(b) At each front outboard designated seating position, have a seat belt warning system that conforms to S7.3; and

(c) Meet the frontal crash protection requirements of S5.1, in a perpendicular impact, with respect to anthropomorphic test devices in each front outboard designated seating position restrained only by Type 1 seat belt assemblies.

S4.1.1.3 *Third option—lap and shoulder belt protection system with belt warning.*

S4.1.1.3.1 Except for convertibles and open-body vehicles, the vehicle shall—

(a) At each front outboard designated seating position have a Type 2 seatbelt assembly that conforms to §571.209 and S7.1 and S7.2 of this standard, with either an integral or detachable upper torso portion, and a seatbelt warning system that conforms to S7.3;

(b) At each designated seating position other than the front outboard positions, have a Type 1 or Type 2 seat belt assembly that conforms to §571.209 and to S7.1 and S7.2 of this standard; and

(c) When it perpendicularly impacts a fixed collision barrier, while moving longitudinally forward at any speed up to and including 30 m.p.h., under the test conditions of S8.1 with anthropomorphic test devices at each front outboard position restrained by Type 2 seatbelt assemblies, experience no complete separation of any load-bearing element of a seatbelt assembly or anchorage.

S4.1.1.3.2 Convertibles and open-body type vehicles shall at each designated seating position have a Type 1 or Type 2 seatbelt assembly that conforms to §571.209 and to S7.1 and S7.2 of this standard, and at each front outboard designated seating position have a seatbelt warning system that conforms to S7.3.

S4.1.2 *Passenger cars manufactured on or after September 1, 1973, and before September 1, 1986.* Each passenger car manufactured on or after September 1, 1973, and before September 1, 1986, shall

meet the requirements of S4.1.2.1, S4.1.2.2 or S4.1.2.3. A protection system that meets the requirements of S4.1.2.1 or S4.1.2.2 may be installed at one or more designated seating positions of a vehicle that otherwise meets the requirements of S4.1.2.3.

S4.1.2.1 *First option—frontal/angular automatic protection system.* The vehicle shall:

(a) At each front outboard designated seating position meet the frontal crash protection requirements of S5.1 by means that require no action by vehicle occupants;

(b) At the front center designated seating position and at each rear designated seating position have a Type 1 or Type 2 seat belt assembly that conforms to Standard No. 209 and to S7.1 and S7.2; and

(c) *Either.* (1) Meet the lateral crash protection requirements of S5.2 and the rollover crash protection requirements of S5.3 by means that require no action by vehicle occupants; or

(2) At each front outboard designated seating position have a Type 1 or Type 2 seat belt assembly that conforms to Standard No. 209 and S7.1 through S7.3, and that meets the requirements of S5.1 with front test dummies as required by S5.1, restrained by the Type 1 or Type 2 seat belt assembly (or the pelvic portion of any Type 2 seat belt assembly which has a detachable upper torso belt) in addition to the means that require no action by the vehicle occupant.

S4.1.2.2 *Second option—head-on automatic protection system.* The vehicle shall—

(a) At each designated seating position have a Type 1 seat belt assembly or Type 2 seat belt assembly with a detachable upper torso portion that conforms to S7.1 and S7.2 of this standard.

(b) At each front outboard designated seating position, meet the frontal crash protecton requirements of S5.1, in a perpendicular impact, by means that require no action by vehicle occupants;

(c) At each front outboard designated seating position, meet the frontal crash protection requirements of S5.1, in a perpendicular impact, with a test device restrained by a Type 1 seat belt assembly; and

(d) At each front outboard designated seating position, have a seat belt warning system that conforms to S7.3.

S4.1.2.3 *Third option—lap and shoulder belt protection system with belt warning.*

S4.1.2.3.1 Except for convertibles and open-body vehicles, the vehicle shall—

(a) At each front outboard designated seating position have a seat belt assembly that conforms to S7.1 and S7.2 of this standard, and a seat belt warning system that conforms to S7.3. The belt assembly shall be either a Type 2 seat belt assembly with a nondetachable shoulder belt that conforms to Standard No. 209 (§ 571.209), or a Type 1 seat belt assembly such that with a test device restrained by the assembly the vehicle meets the frontal crash protection requirements of S5.1 in a perpendicular impact.

(b) At any center front designated seating position, have a Type 1 or Type 2 seat belt assembly that conforms to Standard No. 209 (§ 571.209) and to S7.1 and S7.2 of this standard, and a seat belt warning system that conforms to S7.3; and

(c) At each other designated seating position, have a Type 1 or Type 2 seat belt assembly that conforms to Standard No. 209 (§ 571.209) and S7.1 and S7.2 of this standard.

S4.1.2.3.2 Convertibles and open-body type vehicles shall at each designated seating position have a Type 1 or Type 2 seat belt assembly that conforms to Standard No. 209 (§ 571.209) and to S7.1 and S7.2 of this standard, and at each front designated seating position have a seat belt warning system that conforms to S7.3.

S4.1.3 *Passenger cars manufactured on or after September 1, 1986, and before September 1, 1989.*

S4.1.3.1 *Passenger cars manufactured on or after September 1, 1986, and before September 1, 1987.*

S4.1.3.1.1 Subject to S4.1.3.1.2 and S4.1.3.4, each passenger car manufactured on or after September 1, 1986, and before September 1, 1987, shall comply with the requirements of S4.1.2.1, S4.1.2.2 or S4.1.2.3. A vehicle shall not be deemed to be in noncompliance with this standard if its manufacturer establishes that it did not have reason to

know in the exercise of due care that such vehicle is not in conformity with the requirement of this standard.

S4.1.3.1.2 Subject to S4.1.3.4 and S4.1.5, the amount of passenger cars, specified in S4.1.3.1.1 complying with the requirements of S4.1.2.1 shall be not less than 10 percent of:

(a) The average annual production of passenger cars manufactured on or after September 1, 1983, and before September 1, 1986, by each manufacturer, or

(b) The manufacturer's annual production of passenger cars during the period specified in S4.1.3.1.1.

S4.1.3.1.3 A manufacturer may exclude convertibles which do not comply with the requirements of S4.1.2.1, when it is calculating its average annual production under S4.1.3.1.2(a) or its annual production under S4.1.3.1.2(b).

S4.1.3.2 *Passenger cars manufactured on or after September 1, 1987, and before September 1, 1988.*

S4.1.3.2.1 Subject to S4.1.3.2.2 and S4.1.3.4, each passenger car manufactured on or after September 1, 1987, and before September 1, 1988, shall comply with the requirements of S4.1.2.1, S4.1.2.2 or S4.1.2.3. A vehicle shall not be deemed to be in noncompliance with this standard if its manufacturer establishes that it did not have reason to know in the exercise of due care that such vehicle is not in conformity with the requirement of this standard.

S4.1.3.2.2 Subject to S4.1.3.4 and S4.1.5, the amount of passenger cars specified in S4.1.3.2.1 complying with the requirements of S4.1.2.1. shall be not less than 25 percent of:

(a) The average annual production of passenger cars manufactured on or after September 1, 1984, and before September 1, 1987, by each manufacturer, or

(b) The manufacturer's annual production of passenger cars during the period specified in S4.1.3.2.1.

S4.1.3.2.3 A manufacturer may exclude convertibles which do not comply with the requirements of S4.1.2.1, when it is calculating its average annual production under S4.1.3.2.2(a) or its annual production under S4.1.3.2.2(b).

S4.1.3.3 *Passenger cars manufactured on or after September 1, 1988, and before September 1, 1989.*

S4.1.3.3.1 Subject to S4.1.3.3.2 and S4.1.3.4, each passenger car manufactured on or after September 1, 1988, and before September 1, 1989, shall comply with the requirements of S4.1.2.1, S4.1.2.2 or S4.1.2.3. A vehicle shall not be deemed to be in noncompliance with this standard if its manufacturer establishes that it did not have reason to know in the exercise of due care that such vehicle is not in conformity with the requirement of this standard.

S4.1.3.3.2 Subject to S4.1.3.4 and S4.1.5, the amount of passenger cars specified in S4.1.3.3.1 complying with the requirements of S4.1.2.1 shall be not less than 40 percent of:

(a) The average annual production of passenger cars manufactured on or after September 1, 1985, and before September 1, 1988, by each manufacturer or

(b) The manufacturer's annual production of passenger cars during the period specified in S4.1.3.3.1.

S4.1.3.3.3 A manufacturer may exclude convertibles which do not comply with the requirements of S4.1.2.1, when it is calculating its average annual production under S4.1.3.3.2(a) or its annual production under S4.1.3.3.2(b).

S4.1.3.4 *Calculation of complying passenger cars.* (a) For the purposes of calculating the numbers of cars manufactured under S4.1.3.1.2, S4.1.3.2.2, or S4.1.3.3.2 to comply with S4.1.2.1:

(1) Each car whose driver's seating position complies with the requirements of S4.1.2.1(a) by means not including any type of seat belt and whose front right seating position will comply with the requirements of S4.1.2.1(a) by any means is counted as 1.5 vehicles, and

(2) Each car whose driver's seating position complies with the requirements of S4.1.2.1(a) by means not including any type of seat belt and whose right front seat seating position is equipped with a manual Type 2 seat belt is counted as one vehicle.

(b) For the purposes of complying with S4.1.3.1.2, a passenger car may be counted if it:

(1) Is manufactured on or after September 1, 1985, but before September 1, 1986, and

(2) Complies with S4.1.2.1.

(c) For the purposes of complying with S4.1.3.2.2, a passenger car may be counted if it:

(1) Is manufactured on or after September 1, 1985, but before September 1, 1987,

(2) Complies with S4.1.2.1, and

(3) Is not counted toward compliance with S4.1.3.1.2

(d) For the purposes of complying with S4.1.3.3.2, a passenger car may be counted if it:

(1) Is manufactured on or after September 1, 1985, but before September 1, 1988,

(2) Complies with S4.1.2.1, and

(3) Is not counted toward compliance with S4.1.3.1.2 or S4.1.3.2.2.

S4.1.3.5 *Passenger cars produced by more than one manufacturer.*

S4.1.3.5.1 For the purposes of calculating average annual production of passenger cars for each manufacturer and the amount of passenger cars manufactured by each manufacturer under S4.1.3.1.2, S4.1.3.2.2 or S4.1.3.3.2, a passenger car produced by more than one manufacturer shall be attributed to a single manufacturer as follows, subject to S4.1.3.5.2:

(a) A passenger car which is imported shall be attributed to the importer.

(b) A passenger car manufactured in the United States by more than one manufacturer, one of which also markets the vehicle, shall be attributed to the manufacturer which markets the vehicle.

S4.1.3.5.2 A passenger car produced by more than one manufacturer shall be attributed to any one of the vehicle's manufacturers specified by an express written contract, reported to the National Highway Traffic Safety Administration under 49 CFR part 585, between the manufacturer so specified and the manufacturer to which the vehicle would otherwise be attributed under S4.1.3.5.1.

S4.1.4 Passenger cars manufactured on or after September 1, 1989, but before September 1, 1996.

S4.1.4.1 Except as provided in S4.1.4.2, each passenger car manufactured on or after September 1, 1989 shall comply with the requirements of S4.1.2.1. Any passenger car manufactured on or after September 1, 1989 and before September 1, 1993 whose driver's designated seating position complies with the requirements of S4.1.2.1(a) by means not including any type of seat belt and whose right front designated seating position is equipped with a manual Type 2 seat belt so that the seating position complies with the occupant crash protection requirements of S5.1, with the Type 2 seat belt assembly adjusted in accordance with S7.4.2, shall be counted as a vehicle complying with S4.1.2.1. A vehicle shall not be deemed to be in noncompliance with this standard if its manufacturer establishes that it did not know in the exercise of due care that such vehicle is not in conformity with this standard.

S4.1.4.2 (a) Each passenger car, other than a convertible, manufactured before December 11, 1989 may be equipped with, and each passenger car, other than a convertible, manufactured on or after December 11, 1989 and before September 1, 1990 shall be equipped with a Type 2 seat belt assembly at every forward-facing rear outboard designated seating position. Type 2 seat belt assemblies installed pursuant to this provision shall comply with Standard No. 209 (49 CFR 571.209) and with S7.1.1 of this standard.

(b) Except as provided in S4.1.4.2.1 and S4.1.4.2.2, each passenger car, other than a convertible, manufactured on or after September 1, 1990 and each convertible passenger car manufactured on or after September 1, 1991 shall be equipped with an integral Type 2 seat belt assembly at every forward-facing rear outboard designated seating position. Type 2 seat belt assemblies installed in compliance with this requirement shall comply with Standard No. 209 (49 CFR 571.209) and with S7.1 an S7.2 of this standard. If a Type 2 seat belt assembly installed in compliance with this requirement incorporates any webbing tension-relieving device, the vehicle owner's manual shall include the information specified in S7.4.2(b) of this standard for the tension relieving device, and the vehicle shall comply with S7.4.2(c) of this standard.

(c) As used in this section, ''rear outboard designated seating position'' means any ''outboard designated seating position'' (as that term is defined at 49 CFR 571.3) that is rearward of the front seat(s), except any designated

seating position adjacent to a walkway that is located between the seat and the near side of the vehicle and is designed to allow access to more rearward seating positions.

S4.1.4.2.1 Any rear outboard designated seating position with a seat that can be adjusted to be forward-facing and to face some other direction shall either:

(i) Meet the requirements of S4.1.4.2 with the seat in any position in which it can be occupied while the vehicle is in motion; or

(ii) When the seat is in its forward-facing position, have a Type 2 seat belt assembly with an upper torso restraint that conforms to S7.1 and S7.2 of this standard and that adjusts by means of an emergency locking retractor that conforms with Standard No. 209 (49 CFR 571.209), which upper torso restraint may be detachable at the buckle, and, when the seat is in any position in which it can be occupied while the vehicle is in motion, have a Type 1 seat belt or the pelvic portion of a Type 2 seat belt assembly that conforms to S7.1 and S7.2 of this standard.

S4.1.4.2.2 Any rear outboard designated seating position on a readily removable seat (that is, a seat designed to be easily removed and replaced by means installed by the manufacturer for that purpose) in a vehicle manufactured on or after September 1, 1992 shall meet the requirements of S4.1.4.2 and may use an upper torso belt that detaches at either its upper or lower anchorage points, but *not* both anchorage points, to meet those requirements. The means for detaching the upper torso belt may use a pushbutton action.

S4.1.5 *Passenger cars manufactured on or after September 1, 1996.*

S4.1.5.1 *Frontal/angular automatic protection system.* (a) Each passenger car manufactured on or after September 1, 1996 shall:

(1) At each front outboard designated seating position meet the frontal crash protection requirements of S5.1 by means that require no action by vehicle occupants;

(2) At any front designated seating positions that are not ''outboard designated seating positions,'' as that term is defined at 49 CFR 571.3, and at any rear designated seating positions that are not ''rear outboard designated seating positions,'' as that term is defined at S4.1.4.2(c) of this standard, have a Type 1 or Type 2 seat belt assembly that conforms to Standard No. 209 and S7.1 and S7.2 of this standard; and

(3) At each front designated seating position that is an ''outboard designated seating position,'' as that term is defined at 49 CFR 571.3, and at each forward-facing rear designated seating position that is a ''rear outboard designated seating positions,'' as that term is defined at S4.1.4.2(c) of this standard, have a Type 2 seat belt assembly that conforms to Standard No. 209 and S7.1 through S7.3 of this standard, and, in the case of the Type 2 seat belt assemblies installed at the front outboard designated seating positions, meet the frontal crash protection requirements with the appropriate anthropomorphic test dummy restrained by the Type 2 seat belt assembly in addition to the means that requires no action by the vehicle occupant.

(b) For the purposes of sections S4.1.5 through S4.1.5.3 and S4.2.6 through S4.2.6.2 of this standard, an *inflatable restraint system* means an air bag that is activated in a crash.

S4.1.5.2 *Passenger cars manufactured on or after September 1, 1996 and before September 1, 1997.*

S4.1.5.2.1 The amount of passenger cars complying with the requirement of S4.1.5.1(a)(1) by means of an inflatable restraint system at the driver's and right front passenger's position shall be not less than 95 percent of the manufacturer's total production of passenger cars manufactured on or after September 1, 1996, and before September 1, 1997. A vehicle shall not be deemed to be in noncompliance with this standard if its manufacturer establishes that it did not have reason to know in the exercise of due care that such vehicle is not in conformity with the requirement of this standard.

S4.1.5.2.2 *Passenger cars produced by more than one manufacturer.*

S4.1.5.2.2.1 For the purpose of calculating the production of passenger cars by each manufacturer during the period specified in S4.1.5.2, a passenger

car produced by more than one manufacturer shall be attributed to a single manufacturer as follows, subject to S4.1.5.2.2.2:

(a) A passenger car that is imported into the United States shall be attributed to the importer.

(b) A passenger car manufactured within the United States by more than one manufacturer, one of which also markets the vehicle, shall be attributed to the manufacturer that markets the vehicle.

S4.1.5.2.2.2 A passenger car produced by more than one manufacturer shall be attributed to any one of the vehicle's manufacturers, as specified in an express written contract, reported to the National Highway Traffic Safety Administration pursuant to part 585 of this chapter, between the manufacturer so specified and the manufacturer to which the vehicle otherwise would be attributed, pursuant to S4.1.5.2.2.1.

S4.1.5.3 *Passenger cars manufactured on or after September 1, 1997.* Each passenger car manufactured on or after September 1, 1997 shall comply with the requirement of S4.1.5.1(a)(1) by means of an inflatable restraint system at the driver's and right front passenger's position. A vehicle shall not be deemed to be in noncompliance with this standard if its manufacturer establishes that it did not have reason to know in the exercise of due care that such vehicle is not in conformity with the requirement of this standard.

S4.1.5.4 *Passenger cars certified to S14.* Each passenger car certified to S14 shall, at each front outboard designated seating position, meet the applicable frontal crash protection requirements of S5.1.2(b) by means of an inflatable restraint system that requires no action by vehicle occupants.

S4.2 *Trucks and multipurpose passenger vehicles with a GVWR of 10,000 pounds or less.* As used in this section, *vehicles manufactured for operation by persons with disabilities* means vehicles that incorporate a level change device (e.g., a wheelchair lift or a ramp) for onloading or offloading an occupant in a wheelchair, an interior element of design intended to provide the vertical clearance necessary to permit a person in a wheelchair to move between the lift or ramp and the driver's position or to occupy that position, and either an adaptive control or special driver seating accommodation to enable persons who have limited use of their arms or legs to operate a vehicle. For purposes of this definition, special driver seating accommodations include a driver's seat easily removable with means installed for that purpose or with simple tools, or a driver's seat with extended adjustment capability to allow a person to easily transfer from a wheelchair to the driver's seat.

S4.2.1 *Trucks and multipurpose passenger vehicles with a GVWR of 10,000 pounds or less, manufactured on or after January 1, 1976 and before September 1, 1991.* Each truck and multipurpose passenger vehicle, with a gross vehicle weight rating of 10,000 pounds or less, manufactured before September 1, 1991, shall meet the requirements of S4.1.2.1, or at the option of the manufacturer, S4.1.2.2 or S4.1.2.3 (as specified for passenger cars), except that forward control vehicles manufactured prior to September 1, 1981, convertibles, open-body type vehicles, walk-in van-type trucks, motor homes, vehicles designed to be exclusively sold to the U.S. Postal Service, and vehicles carrying chassis-mount campers may instead meet the requirements of S4.2.1.1 or S4.2.1.2.

S4.2.1.1 *First option—complete automatic protection system.* The vehicle shall meet the crash protection requirements of S5 by means that require no action by vehicle occupants.

S4.2.1.2 *Second option—belt system.* The vehicle shall have seat belt assemblies that conform to Standard 209 (49 CFR 571.209) installed as follows:

(a) A Type 1 or Type 2 seat belt assembly shall be installed for each designated seating position in convertibles, open-body type vehicles, and walk-in van-type trucks.

(b) In vehicles manufactured for operation by persons with disabilities, a Type 2 or Type 2A seat belt assembly shall be installed for the driver's seating position, a Type 2 seat belt assembly shall be installed for each other outboard designated seating position that includes the windshield header within the head impact area, and a Type 1 or Type 2 seat belt assembly shall be installed for each other designated seating position.

(c) In all vehicles except those for which requirements are specified in S4.2.1.2 (a) or (b), a Type 2 seat belt assembly shall be installed for each outboard designated seating position that includes the windshield header within the head impact area, and a Type 1 or Type 2 seat belt assembly shall be installed for each other designated seating position.

S4.2.2 *Trucks and multipurpose passenger vehicles with a GVWR of 8,500 pounds or less and an unloaded vehicle weight of 5,500 pounds or less, manufactured on or after September 1, 1991 and before September 1, 1997.* Except as provided in S4.2.4, each truck and multipurpose passenger vehicle, with a gross vehicle weight rating of 8,500 pounds or less and an unloaded vehicle weight of 5,500 pounds or less, manufactured on or after September 1, 1991 and before September 1, 1997, shall meet the requirements of S4.1.2.1, or at the option of the manufacturer, S4.1.2.2 or S4.1.2.3 (as specified for passenger cars), except that convertibles, open-body type vehicles, walk-in van-type trucks, motor homes, vehicles designed to be exclusively sold to the U.S. Postal Service, vehicles carrying chassis-mount campers, and vehicles manufactured for operation by persons with disabilities may instead meet the requirements of S4.2.1.1 or S4.2.1.2. Each Type 2 seat belt assembly installed in a front outboard designated seating position in accordance with S4.1.2.3 shall meet the requirements of S4.6.

S4.2.3 *Trucks and multipurpose passenger vehicles manufactured on or after September 1, 1991 with either a GVWR or more than 8,500 pounds but not greater than 10,000 pounds or with an unloaded vehicle weight greater than 5,500 pounds and a GVWR of 10,000 pounds or less.* Except as provided in S4.2.4, each truck and multipurpose passenger vehicle manufactured on or after September 1, 1991, that has either a gross vehicle weight rating which is greater than 8,500 pounds, but not greater than 10,000 pounds, or has an unloaded vehicle weight greater than 5,500 pounds and a GVWR of 10,000 pounds or less, shall meet the requirements of S4.1.2.1, or at the option of the manufacturer, S4.1.2.2 or S4.1.2.3 (as specified for passenger cars), except that convertibles, open-body type vehicles, walk-in van-type trucks, motor homes, vehicles designed to be exclusively sold to the U.S. Postal Service, and vehicles carrying chassis-mount campers may instead meet the requirements of S4.2.1.1 or S4.2.1.2.

S4.2.4 *Rear outboard seating positions in trucks and multipurpose passenger vehicles manufactured on or after September 1, 1991 with a GVWR of 10,000 pounds or less.* Except as provided in S4.2.4.2 and S4.2.4.3, each truck and each multipurpose passenger vehicle, other than a motor home, manufactured on or after September 1, 1991 that has a gross vehicle weight rating of 10,000 pounds or less shall be equipped with an integral Type 2 seat belt assembly at every forward-facing rear outboard designated seating position. Type 2 seat belt assemblies installed in compliance with this requirement shall comply with Standard No. 209 (49 CFR 571.209) and with S7.1 and S7.2 of this standard. If a Type 2 seat belt assembly installed in compliance with this requirement incorporates any webbing tension-relieving device, the vehicle owner's manual shall include the information specified in S7.4.2(b) of this standard for the tension relieving device, and the vehicle shall comply with S7.4.2(c) of this standard.

S4.2.4.1 As used in this section—

(a) *Motor home* means a motor vehicle with motive power that is designed to provide temporary residential accommodations, as evidenced by the presence of at least four of the following facilities: cooking; refrigeration or ice box; self-contained toilet; heating and/or air conditioning; a potable water supply system including a faucet and a sink; and a separate 110–125 volt electrical power supply and/or an LP gas supply.

(b) *Rear outboard designated seating position* means any ''outboard designated seating position'' (as that term is defined at 49 CFR 571.3) that is rearward of the front seat(s), except any designated seating positions adjacent to a walkway located between the seat and the side of the vehicle, which walkway is designed to allow access to more rearward seating positions.

S4.2.4.2 Any rear outboard designated seating position with a seat

that can be adjusted to be forward-facing and to face some other direction shall either:

(i) Meet the requirements of S4.2.4 with the seat in any position in which it can be occupied while the vehicle is in motion; or

(ii) When the seat is in its forward-facing position, have a Type 2 seat belt assembly with an upper torso restraint that conforms to S7.1 and S7.2 of this standard and that adjusts by means of an emergency locking retractor that conforms with Standard No. 209 (49 CFR 571.209), which upper torso restraint may be detachable at the buckle, and, when the seat is in any position in which it can be occupied while the vehicle is in motion, have a Type 1 seat belt or the pelvic portion of a Type 2 seat belt assembly that conforms to S7.1 and S7.2 of this standard.

S4.2.4.3 Any rear outboard designated seating position on a readily removable seat (that is, a seat designed to be easily removed and replaced by means installed by the manufacturer for that purpose) in a vehicle manufactured on or after September 1, 1992 shall meet the requirements of S4.2.4 and may use an upper torso belt that detaches at either its upper or lower anchorage point, but not both anchorage points, to meet those requirements. The means for detaching the upper torso belt may use a pushbutton action.

S4.2.5 *Trucks, buses, and multipurpose passenger vehicles with a GVWR of 8,500 pounds or less and an unloaded vehicle weight of 5,500 pounds or less manufactured on or after September 1, 1994, and before September 1, 1997.*

S4.2.5.1 *Trucks, buses, and multipurpose passenger vehicles with a GVWR of 8,500 pounds or less and an unloaded vehicle weight of 5,500 pounds or less manufactured on or after September 1, 1994, and before September 1, 1995.*

S4.2.5.1.1 Subject to S4.2.5.1.2 and S4.2.5.5 and except as provided in S4.2.4, each truck, bus and multipurpose passenger vehicle, other than walk-in van-type trucks, vehicles designed to be exclusively sold to the U.S. Postal Service, and vehicles manufactured for operation by persons with disabilities, with a GVWR of 8,500 pounds or less and an unloaded vehicle weight of 5,500 pounds or less that is manufactured on or after September 1, 1994 and before September 1, 1995, shall comply with the requirements of S4.1.2.1, S4.1.2.2, or S4.1.2.3 (as specified for passenger cars). A vehicle shall not be deemed to be in noncompliance with this standard if its manufacturer establishes that it did not have reason to know in the exercise of due care that such vehicle is not in conformity with the requirement of standard.

S4.2.5.1.2 Subject to S4.2.5.5, the amount of trucks, buses, and multipurpose passenger vehicles specified in S4.2.5.1.1 complying with S4.1.2.1 (as specified for passenger cars) shall be not less than 20 percent of:

(a) The average annual production of trucks, buses, and multipurpose passenger vehicles with a GVWR of 8,500 pounds or less and an unloaded vehicle weight of 5,500 pounds or less manufactured on or after September 1, 1991, and before September 1, 1994, by each manufacturer that produced such vehicles during each of those annual production periods, or

(b) The manufacturer's total production of trucks, buses, and multipurpose passenger vehicle with a GVWR of 8,500 pounds or less and an unloaded vehicle weight of 5,500 pounds or less during the period specified in S4.2.5.1.1.

S4.2.5.2 *Trucks, buses, and multipurpose passenger vehicles with a GVWR of 8,500 pounds or less and an unloaded vehicle weight of 5,500 pounds or less manufactured on or after September 1, 1995 and before September 1, 1996.*

S4.2.5.2.1 Subject to S4.2.5.2.2 and S4.2.5.5 and except as provided in S4.2.4, each truck, bus, and multipurpose passenger vehicle, other than walk-in van-type trucks, vehicles designed to be exclusively sold to the U.S. Postal Service, and vehicles manufactured for operation by persons with disabilities, with a GVWR of 8,500 pounds or less and an unloaded vehicle weight of 5,500 pounds or less that is manufactured on or after September 1, 1995 and before September 1, 1996, shall comply with the requirements of S4.1.2.1, S4.1.2.2, or S4.1.2.3 (as specified for passenger cars). A vehicle shall not be deemed to be in noncompliance with this standard if its manufacturer establishes that it did not have reason to know in the exercise of due care that such vehicle is

not in conformity with the requirement of this standard.

S4.2.5.2.2 Subject to S4.2.5.5, the amount of trucks, buses, and multipurpose passenger vehicles specified in S4.2.5.2.1 complying with S4.1.2.1 (as specified for passenger cars) shall be not less than 50 percent of:

(a) The average annual production of trucks, buses, and multipurpose passenger vehicles with a GVWR of 8,500 pounds or less and an unloaded vehicle weight of 5,500 pounds or less manufactured on or after September 1, 1992, and before September 1, 1995, by each manufacturer that produced such vehicles during each of those annual production periods, or

(b) The manufacturer's total production of trucks, buses, and multipurpose passenger vehicles with a GVWR of 8,500 pounds or less and an unloaded vehicle weight of 5,500 pounds or less during the period specified in S4.2.5.2.1.

S4.2.5.3 *Trucks, buses, and multipurpose passenger vehicles with a GVWR of 8,500 pounds or less and an unloaded vehicle weight of 5,500 pounds or less manufactured on or after September 1, 1996 and before September 1, 1997.*

S4.2.5.3.1 Subject to S4.2.5.3.2 and S4.2.5.5 and except as provided in S4.2.4, each truck, bus, and multipurpose passenger vehicle, other than walk-in van-type trucks, vehicles designed to be exclusively sold to the U.S. Postal Service, and vehicles manufactured for operation by persons with disabilities, with a GVWR of 8,500 pounds or less and an unloaded vehicle weight of 5,500 pounds or less that is manufactured on or after September 1, 1996 and before September 1, 1997, shall comply with the requirements of S4.1.2.1, S4.1.2.2, or S4.1.2.3 (as specified for passenger cars). A vehicle shall not be deemed to be in noncompliance with this standard if its manufacturer establishes that it did not have reason to know in the exercise of due care that such vehicle is not in conformity with the requirement of this standard.

S4.2.5.3.2 Subject to S4.2.5.5, the amount of trucks, buses, and multipurpose passenger vehicles specified in S4.2.5.3.1 complying with S4.1.2.1 (as specified for passenger cars) shall be not less than 90 percent of:

(a) The average annual production of trucks, buses, and multipurpose passenger vehicles with a GVWR of 8,500 pounds or less and an unloaded vehicle weight of 5,500 pounds or less manufactured on or after September 1, 1993, and before September 1, 1996, by each manufacturer that produced such vehicles during each of those annual production periods, or

(b) The manufacturer's total production of trucks, buses, and multipurpose passenger vehicles with a GVWR of 8,500 pounds or less and an unloaded vehicle weight of 5,500 pounds or less during the period specified in S4.2.5.3.1.

S4.2.5.4 *Alternative phase-in schedule.* A manufacturer may, at its option, comply with the requirements of this section instead of complying with the requirements set forth in S4.2.5.1, S4.2.5.2, and S4.2.5.3.

(a) Except as provided in S4.2.4, each truck, bus, and multipurpose passenger vehicle, other than walk-in van-type trucks, vehicles designed to be exclusively sold to the U.S. Postal Service, and vehicles manufactured for operation by persons with disabilities, with a GVWR of 8,500 pounds or less and an unloaded vehicle weight of 5,500 pounds or less that is manufactured on or after September 1, 1994 and before September 1, 1995 shall comply with the requirements of S4.1.2.1, S4.1.2.2, or S4.1.2.3 (as specified for passenger cars).

(b) Except as provided in S4.2.4, each truck, bus, and multipurpose passenger vehicle, other than walk-in van-tape trucks, vehicles designed to be exclusively sold to the U.S. Postal Service, and vehicles manufactured for operation by persons with disabilities, with a GVWR of 8,500 pounds or less and an unloaded vehicle weight of 5,500 pounds or less that is manufactured on or after September 1, 1995 shall comply with the requirements of S4.1.2.1 (as specified for passenger cars) of this standard. A vehicle shall not be deemed to be in noncompliance with this standard if its manufacturer establishes that it did not have reason to know in the exercise of due care that such vehicle is not in conformity with the requirement of this standard.

(c) Each truck, bus, and multipurpose passenger vehicle with a GVWR of 8,500 pounds or less and an unloaded vehicle

weight of 5,500 pounds or less manufactured on or after September 1, 1995, but before September 1, 1998, whose driver's seating position complies with the requirements of S4.1.2.1(a) of this standard by means not including any type of seat belt and whose right front passenger's seating position is equipped with a manual Type 2 seat belt that complies with S5.1 of this standard, with the seat belt assembly adjusted in accordance with S7.4.2, shall be counted as a vehicle complying with S4.1.2.1.

S4.2.5.5 *Calculation of complying trucks, buses, and multipurpose passenger vehicles with a GVWR of 8,500 pounds or less and an unloaded vehicle weight of 5,500 pounds or less.*

(a) For the purposes of the calculations required in S4.2.5.1.2, S4.2.5.2.2, and S4.2.5.3.2 of the number of trucks, buses, and multipurpose passenger vehicles with a GVWR of 8,500 pounds or less and an unloaded vehicle weight of 5,500 pounds or less that comply with S4.1.2.1 (as specified for passenger cars):

(1) Each truck, bus, and multipurpose passenger vehicle with a GVWR of 8,500 pounds or less and an unloaded vehicle weight of 5,500 pounds or less whose driver's seating position complies with the requirements of S4.1.2.1(a) by means not including any type of seat belt and whose front right seating position complies with the requirements of S4.1.2.1(a) by any means is counted as 1.5 vehicles, and

(2) Each truck, bus, and multipurpose passenger vehicle with a GVWR of 8,500 pounds or less and an unloaded vehicle weight of 5,500 pounds or less whose driver's seating position complies with the requirements of S4.1.2.1(a) by means not including any type of seat belt and whose right front passenger's seating position is equipped with a manual Type 2 seat belt that complies with S5.1 of this standard, with the seat belt assembly adjusted in accordance with S7.4.2, is counted as one vehicle.

(3) Each truck, bus, and multipurpose passenger vehicle with a GVWR of 8,500 pounds or less and an unloaded vehicle weight of 5,500 pounds or less that is manufactured in two or more stages or that is altered (within the meaning of § 567.7 of this chapter) after having previously been certified in accordance with part 567 of this chapter is not subject to the requirements of S4.2.5.1.2, S4.2.5.2.2, and S4.2.5.3.2. Such vehicles may be excluded from all calculations of compliance with S4.2.5.1.2, S4.2.5.2.2, and S4.2.5.3.2.

(b) For the purposes of complying with S4.2.5.1.2, a truck, bus, or multipurpose passenger vehicle with a GVWR of 8,500 pounds or less and an unloaded vehicle weight of 5,500 pounds or less may be counted if it:

(1) Is manufactured on or after September 1, 1992, but before September 1, 1994, and

(2) Is certified as complying with S4.1.2.1 (as specified for passenger cars).

(c) For the purposes of complying with S4.2.5.2.2, a truck, bus, or multipurpose passenger vehicle with a GVWR of 8,500 pounds or less and an unloaded vehicle weight of 5,500 pounds or less may be counted if it:

(1) Is manufactured on or after September 1, 1992, but before September 1, 1995,

(2) Is certified as complying with S4.1.2.1 (as specified for passenger cars), and

(3) Is not counted toward compliance with S4.2.5.1.2.

(d) For the purposes of complying with S4.2.5.3.2, a truck, bus, or multipurpose passenger vehicle with a GVWR of 8,500 pounds or less and an unloaded vehicle weight of 5,500 pounds or less may be counted if it:

(1) Is manufactured on or after September 1, 1992, but before September 1, 1996,

(2) Is certified as complying with S4.1.2.1 (as specified for passenger cars), and

(3) Is not counted toward compliance with S4.2.5.1.2 or S4.2.5.2.2.

S4.2.5.6 *Trucks, buses, and multipurpose passenger vehicles with a GVWR of 8,500 pounds or less and an unloaded vehicle weight of 5,500 pounds or less produced by more than one manufacturer.*

S4.2.5.6.1 For the purposes of calculating average annual production for each manufacturer and the amount of vehicles manufactured by each manufacturer under S4.2.5.1.2, S4.2.5.2.2, or S4.2.5.3.2, a truck, bus, or multipurpose passenger vehicle with a GVWR of 8,500

pounds or less and an unloaded vehicle weight of 5,500 pounds or less produced by more than one manufacturer shall be attributed to a single manufacturer as follows, subject to S4.2.5.6.2:

(a) A vehicle that is imported shall be attributed to the importer.

(b) A vehicle that is manufactured in the United States by more than one manufacturer, one of which also markets the vehicle, shall be attributed to the manufacturer that markets the vehicle.

S4.2.5.6.2 A truck, bus, or multipurpose passenger vehicle with, GVWR of 8,500 pounds or less and an unloaded vehicle weight of 5,500 pounds or less produced by more than one manufacturer shall be attributed to any one of the vehicle's manufacturers specified in an express written contract, reported to the National Highway Traffic Safety Administration under 49 CFR part 585, between the manufacturer so specified and the manufacturer to which the vehicle would otherwise be attributed under S4.2.5.6.1 of this standard.

S4.2.6 *Trucks, buses, and multipurpose passenger vehicles with a GVWR of 8,500 pounds or less and an unloaded vehicle weight of 5,500 pounds or less manufactured on or after September 1, 1997.* Each truck, bus, and multipurpose passenger vehicle with a GVWR of 8,500 pounds or less and an unloaded vehicle weight of 5,500 pounds or less, which is manufactured on or after September 1, 1997, shall comply with the requirements of S4.1.5.1 of this standard (as specified for passenger cars), except that walk-in van-type trucks and vehicles designed to be sold exclusively to the U.S. Postal Service may meet the requirements of S4.2.1.1 or S4.2.1.2 of this standard instead of the requirements of S4.1.5.1.

S4.2.6.1 *Trucks, buses, and multipurpose passenger vehicles with a GVWR of 8,500 pounds or less and an unloaded vehicle weight of 5,500 pounds or less manufactured on or after September 1, 1997 and before September 1, 1998.*

S4.2.6.1.1 The amount of trucks, buses, and multipurpose passenger vehicles complying with the requirements of S4.1.5.1(a)(1) of this standard by means of an inflatable restraint system shall be not less than 80 percent of the manufacturer's total combined production of subject vehicles manufactured on or after September 1, 1997 and before September 1, 1998. Each truck, bus, or multipurpose passenger vehicle with a GVWR of 8,500 pounds or less and an unloaded vehicle weight of 5,500 pounds or less manufactured on or after September 1, 1997 and before September 1, 1998, whose driver's seating position complies with S4.1.5.1(a)(1) by means of an inflatable restraint system and whose right front passenger's seating position is equipped with a manual Type 2 seat belt assembly that complies with S5.1 of this standard, with the seat belt assembly adjusted in accordance with S7.4.2 of this standard, shall be counted as a vehicle complying with S4.1.5.1(a)(1) by means of an inflatable restraint system. A vehicle shall not be deemed to be in noncompliance with this standard if its manufacturer establishes that it did not have reason to know in the exercise of due care that such vehicle is not in conformity with the requirement of this standard.

S4.2.6.1.2 *Trucks, buses, and multipurpose passenger vehicles with a GVWR of 8,500 pounds or less and an unloaded vehicle weight of 5,500 pounds or less produced by more than one manufacturer.*

S4.2.6.1.2.1 For the purpose of calculating the production by each manufacturer during the period specified in S4.2.6.1.1, a truck, bus, or multipurpose passenger vehicle with a GVWR of 8,500 pounds or less and an unloaded vehicle weight of 5,500 pounds or less produced by more than one manufacturer shall be attributed to a single manufacturer as follows, subject to S4.2.6.1.2.2:

(a) A vehicle that is imported into the United States shall be attributed to the importer.

(b) A vehicle manufactured within the United States by more than one manufacturer, one of which also markets the vehicle, shall be attributed to the manufacturer that markets the vehicle.

S4.2.6.1.2.2 A truck, bus, or multipurpose passenger vehicle produced by more than one manufacturer shall be attributed to any one of the vehicle's manufacturers, as specified in an express written contract, reported to the National Highway Traffic Safety Administration pursuant to part 585 of

this chapter, between the manufacturer so specified and the manufacturer to which the vehicle otherwise would be attributed, pursuant to S4.2.6.1.2.1.

S4.2.6.2 *Trucks, buses, and multipurpose passenger vehicles with a GVWR of 8,500 pounds or less and an unloaded vehicle weight of 5,500 pounds or less manufactured on or after September 1, 1998.* Each truck, bus, or multipurpose vehicle with a GVWR of 8,500 pounds or less and an unloaded vehicle weight of 5,500 pounds or less manufactured on or after September 1, 1998 shall comply with the requirement of S4.1.5.1(a)(1) by means of an inflatable restraint system at the driver's and right front passenger's position. A vehicle shall not be deemed to be in noncompliance with this standard if its manufacturer establishes that it did not have reason to know in the exercise of due care that such vehicle is not in conformity with the requirement of this standard.

S4.2.6.3 *Trucks, buses, and multipurpose passenger vehicles certified to S14.* Each truck, bus, or multipurpose passenger vehicle with a GVWR of 3,855 kg (8,500 lb) or less and an unloaded vehicle weight of 2,495 kg (5,500 lb) or less certified to S14 shall, at each front outboard designated seating position, meet the applicable frontal crash protection requirements of S5.1.2(b) by means of an inflatable restraint system that requires no action by vehicle occupants.

S4.3 *Trucks and multipurpose passenger vehicles, with GVWR of more than 10,000 pounds.*

S4.3.1 *Trucks and multipurpose passenger vehicles with a GVWR of more than 10,000 pounds, manufactured in or after January 1, 1972 and before September 1, 1990.* Each truck and multipurpose passenger vehicle with a gross vehicle weight rating of more than 10,000 pounds, manufactured on or after January 1, 1972 and before September 1, 1990, shall meet the requirements of S4.3.1.1 or S4.3.1.2. A protection system that meets the requirements of S4.3.1.1 may be installed at one or more designated seating positions of a vehicle that otherwise meets the requirements of S4.3.1.2.

S4.3.1.1 *First option—complete passenger protection system.* The vehicle shall meet the crash protection requirements of S5 by means that require no action by vehicle occupants.

S4.3.1.2 *Second option—belt system.* The vehicle shall, at each designated seating position, have either a Type 1 or a Type 2 seat belt assembly that conforms to S571.209.

S4.3.2 *Trucks and multipurpose passenger vehicles with a GVWR of more than 10,000 pounds, manufactured on or after September 1, 1990.* Each truck and multipurpose passenger vehicle with a gross vehicle weight rating of more than 10,000 pounds, manufactured on or after September 1, 1990, shall meet the requirements of S4.3.2.1 or S4.3.2.2. A protection system that meets the requirements of S4.3.2.1 may be installed at one or more designated seating positions of a vehicle that otherwise meets the requirements of S4.3.2.2.

S4.3.2.1 *First option—complete passenger protection system.* The vehicle shall meet the crash protection requirements of S5 by means that require no action by vehicle occupants.

S4.3.2.2 *Second option—belt system.* The vehicle shall, at each designated seating position, have either a Type 1 or a Type 2 seat belt assembly that conforms to § 571.209 of this part and S7.2 of this Standard. A Type 1 belt assembly or the pelvic portion of a dual retractor Type 2 belt assembly installed at a front outboard seating position shall include either an emergency locking retractor or an automatic locking retractor. If a seat belt assembly installed at a front outboard seating position includes an automatic locking retractor for the lap belt or the lap belt portion, that seat belt assembly shall comply with the following:

(a) An automatic locking retractor used at a front outboard seating position that has some type of suspension system for the seat shall be attached to the seat structure that moves as the suspension system functions.

(b) The lap belt or lap belt portion of a seat belt assembly equipped with an automatic locking retractor that is installed at a front outboard seating position must allow at least ¾ inch, but less than 3 inches, of webbing movement before retracting webbing to the next locking position.

(c) Compliance with S4.3.2.2(b) of this standard is determined as follows:

(1) The seat belt assembly is buckled and the retractor end of the seat belt assembly is anchored to a horizontal surface. The webbing for the lap belt or lap belt portion of the seat belt assembly is extended to 75 percent of its length and the retractor is locked after the initial adjustment.

(2) A load of 20 pounds is applied to the free end of the lap belt or the lap belt portion of the belt assembly (i.e., the end that is not anchored to the horizontal surface) in the direction away from the retractor. The position of the free end of the belt assembly is recorded.

(3) Within a 30 second period, the 20 pound load is slowly decreased, until the retractor moves to the next locking position. The position of the free end of the belt assembly is recorded again.

(4) The difference between the two positions recorded for the free end of the belt assembly shall be at least ¾ inch but less than 3 inches.

S4.4 *Buses.*

S4.4.1 *Buses manufactured on or after January 1, 1972 and before September 1, 1990.* Each bus manufactured on or after January 1, 1972 and before September 1, 1990, shall meet the requirements of S4.4.1.1 or S4.4.1.2.

S4.4.1.1 *First option—complete passenger protection system—driver only.* The vehicle shall meet the crash protection requirements of S5, with respect to an anthropomorphic test dummy in the driver's designated seating position, by means that require no action by vehicle occupants.

S4.4.1.2 *Second option—belt system—driver only.* The vehicle shall, at the driver's designated seating position, have either a Type 1 or a Type 2 seat belt assembly that conforms to S571.209.

S4.4.2 *Buses manufactured on or after September 1, 1990.* Each bus manufactured on or after September 1, 1990, shall meet the requirements of S4.4.2.1 or S4.4.2.2.

S4.4.2.1 *First option—complete passenger protection system—driver only.* The vehicle shall meet the crash protection requirements of S5, with respect to an anthropomorphic test dummy in the driver's designated seating position, by means that require no action by vehicle occupants.

S4.4.2.2 *Second option—belt system—driver only.* The vehicle shall, at the driver's designated seating position, have either a Type 1 or a Type 2 seat belt assembly that conforms to §571.209 of this part and S7.2 of this Standard. A Type 1 belt assembly or the pelvic portion of a dual retractor Type 2 belt assembly installed at the driver's seating position shall include either an emergency locking retractor or an automatic locking retractor. If a seat belt assembly installed at the driver's seating position includes an automatic locking retractor for the lap belt or the lap belt portion, that seat belt assembly shall comply with the following:

(a) An automatic locking retractor used at a driver's seating position that has some type of suspension system for the seat shall be attached to the seat structure that moves as the suspension system functions.

(b) The lap belt or lap belt portion of a seat belt assembly equipped with an automatic locking retractor that is installed at the driver's seating position must allow at least ¾ inch, but less than 3 inches, of webbing movement before retracting webbing to the next locking position.

(c) Compliance with S4.4.2.2(b) of this standard is determined as follows:

(1) The seat belt assembly is buckled and the retractor end of the seat belt assembly is anchored to a horizontal surface. The webbing for the lap belt or lap belt portion of the seat belt assembly is extended to 75 percent of its length and the retractor is locked after the initial adjustment.

(2) A load of 20 pounds is applied to the free end of the lap belt or the lap belt portion of the belt assembly (i.e., the end that is not anchored to the horizontal surface) in the direction away from the retractor. The position of the free end of the belt assembly is recorded.

(3) Within a 30 second period, the 20 pound load is slowly decreased, until the retractor moves to the next locking position. The position of the free end of the belt assembly is recorded again.

(4) The difference between the two positions recorded for the free end of

the belt assembly shall be at least ¾ inch but less than 3 inches.

S4.4.3 *Buses manufactured on or after September 1, 1991.*

S4.4.3.1 Each bus with a gross vehicle weight rating of more than 10,000 pounds shall comply with the requirements S4.4.2.1 or S4.4.2.2.

S4.4.3.2 Except as provided in S4.4.3.2.2 and S4.4.3.2.3, each bus with a gross vehicle weight rating of 10,000 pounds or less, except a school bus, shall be equipped with an integral Type 2 seat belt assembly at the driver's designated seating position and at the front and every rear forward-facing outboard designated seating position, and with a Type 1 or Type 2 seat belt assembly at all other designated seating positions. Type 2 seat belt asemblies installed in compliance with this requirement shall comply with Standard No. 209 (49 CFR 571.209) and with S7.1 and S7.2 of this standard. If a Type 2 seat belt assembly installed in compliance with this requirement incorporates any webbing tension-relieving device, the vehicle owner's manual shall include the information specified in S7.4.2(b) of this standard for the tension relieving device, and the vehicle shall comply with S7.4.2(c) of this standard.

S4.4.3.2.1 As used in this section, a ''rear outboard designated position'' means any ''outboard designated seating position'' (as that term is defined at 49 CFR 571.3) that is rearward of the front seat(s), except any designated seating positions adjacent to a walkway located between the seat and the side of the vehicle, which walkway is designed to allow access to more rearward seating positions.

S4.4.3.2.2 Any rear outboard designated seating position with a seat that can be adjusted to be forward-facing and to face some other direction shall either:

(i) Meet the requirements of S4.4.3.2 with the seat in any position in which it can be occupied while the vehicle is in motion; or

(ii) When the seat is in its forward-facing position, have a Type 2 seat belt assembly with an upper torso restraint that conforms to S7.1 and S7.2 of this standard and that adjusts by means of an emergency locking retractor that conforms with Standard No. 209 (49 CFR 571.209), which upper torso restraint may be detachable at the buckle, and, when the seat is in any position in which it can be occupied while the vehicle is in motion, have a Type 1 seat belt or the pelvic portion of a Type 2 seat belt assembly that conforms to S7.1 and S7.2 of this standard.

S4.4.3.2.3 Any rear outboard designated seating position on a readily removable seat (that is, a seat designed to be easily removed and replaced by means installed by the manufacturer for that purpose) in a vehicle manufactured on or after September 1, 1992 shall meet the requirements of S4.4.3.2 and may use an upper torso belt that detaches at either its upper or lower anchorage point, but not both anchorage points, to meet those requirements. The means for detaching the upper torso belt may use a pushbutton action.

S4.4.3.3 Each school bus with a gross vehicle weight rating of 10,000 pounds or less shall be equipped with an integral Type 2 seat belt assembly at the driver's designated seating position and at the right front passenger's designated seating position (if any), and with a Type 1 or Type 2 seat belt assembly at all other designated seating positions. Type 2 seat belt assemblies installed in compliance with this requirement shall comply with Standard No. 209 (49 CFR 571.209) and with S7.1 and S7.2 of this standard. The lap belt portion of a Type 2 seat belt assembly installed at the driver's designated seating position and at the right front passenger's designated seating position (if any) shall include either an emergency locking retractor or an automatic locking retractor, which retractor shall not retract webbing to the next locking position until at least ¾ inch of webbing has moved into the retractor. In determining whether an automatic locking retractor complies with this requirement, the webbing is extended to 75 percent of its length and the retractor is locked after the initial adjustment. If a Type 2 seat belt assembly installed in compliance with this requirement incorporates any webbing tension-relieving device, the vehicle owner's manual shall include the information specified in S7.4.2(b) of

this standard for the tension-relieving device, and the vehicle shall comply with S7.4.2(c) of this standard.

S4.4.4 *Buses with a GVWR of 8,500 pounds or less and an unloaded vehicle weight of 5,500 pounds or less manufactured on or after September 1, 1994.* Each bus with a GVWR of 8,500 pounds or less and an unloaded vehicle weight of 5,500 pounds or less manufactured on or after September 1, 1984 shall comply with the requirements of S4.2.5 and S4.2.6 of this standard, as applicable, for front seating positions, and with the requirements of S4.4.3.2 or S4.4.3.3 of this standard, as applicable, for all rear seating positions.

S4.5 *Other general requirements.*

S4.5.1 *Labeling and owner's manual information.* The labels specified in S4.5.1 (b), (c), and (e) of this standard are not required for vehicles that have a smart passenger air bag meeting the criteria specified in S4.5.5 of this standard.

(a) *Air bag maintenance or replacement information.* If the vehicle manufacturer recommends periodic maintenance or replacement of an inflatable restraint system, as that term is defined in S4.1.5.1(b) of this standard, installed in a vehicle, that vehicle shall be labeled with the recommended schedule for maintenance or replacement. The schedule shall be specified by month and year, or in terms of vehicle mileage, or by intervals measured from the date appearing on the vehicle certification label provided pursuant to 49 CFR part 567. The label shall be permanently affixed to the vehicle within the passenger compartment and lettered in English in block capital and numerals not less than three thirty-seconds of an inch high. This label may be combined with the label required by S4.5.1(b) of this standard to appear on the sun visor. If some regular maintenance or replacement of the inflatable restraint system(s) in a vehicle is recommended by the vehicle manufacturer, the owner's manual shall also set forth the recommended schedule for maintenance or replacement.

(b) *Sun visor air bag warning label.* (1) Except as provided in S4.5.1(b)(2), each vehicle shall have a label permanently affixed to either side of the sun visor, at the manufacturer's option, at each front outboard seating position that is equipped with an inflatable restraint. The label shall conform in content to the label shown in either Figure 6a or 6b of this standard, as appropriate, and shall comply with the requirements of S4.5.1(b)(1)(i) through S4.5.1(b)(1)(iv).

(i) The heading area shall be yellow with the word ''WARNING'' and the alert symbol in black.

(ii) The message area shall be white with black text. The message area shall be no less than 30 cm^2 (4.7 in^2).

(iii) The pictogram shall be black with a red circle and slash on a white background. The pictogram shall be no less than 30 mm (1.2 in) in diameter.

(iv) If the vehicle does not have a back seat, the label shown in Figure 6a or 6b may be modified by omitting the statement: ''The BACK SEAT is the SAFEST place for children.''

(2) Vehicles certified to meet the requirements specified in S19, S21, or S23, by means of an automatic suppression system, shall have a label permanently affixed to either side of the sun visor, at the manufacturer's option, at each front outboard seating position that is equipped with an inflatable restraint. The label shall conform in content to the label shown in Figure 8 of this standard and shall comply with the requirements of S4.5.1(b)(2)(i) through S4.5.1(b)(2)(iv).

(i) The heading area shall be yellow with the word ''WARNING'' and the alert symbol in black.

(ii) The message area shall be white with black text. The message area shall be no less than 30 cm^2 (4.7 in^2).

(iii) The pictogram shall be black on a white background. The pictogram shall be no less than 30 mm (1.2 in) in length.

(iv) If the vehicle does not have a back seat, the label shown in the figure may be modified by omitting the statement: ''The BACK SEAT is the SAFEST place for CHILDREN.''

(3) The vehicle manufacturer may, at its option, affix an additional label adjacent to the label shown in Figure 8 that provides specific information about the vehicle's advanced air bag system as long as the information is not confusing or misleading when read in conjunction with Figure 8.

(c) *Air bag alert label.* If the label required by S4.5.1(b) is not visible when the sun visor is in the stowed position, an air bag alert label shall be permanently affixed to that visor so that the label is visible when the visor is in that position. The label shall conform in content to the sun visor label shown in figure 6(c) of this standard, and shall comply with the requirements of S4.5.1(c)(1) through S4.5.1(c)(3).

(1) The message area shall be black with yellow text. The message area shall be no less than 20 square cm.

(2) The pictogram shall be black with a red circle and slash on a white background. The pictogram shall be no less than 20 mm in diameter.

(3) If a vehicle does not have an inflatable restraint at any front seating position other than that for the driver, the pictogram may be omitted from the label shown in figure 6c.

(d) At the option of the manufacturer, the requirements in S4.5.1(b) and S4.5.1(c) for labels that are permanently affixed to specified parts of the vehicle may instead be met by permanent marking or molding of the required information.

(e) *Label on the dashboard.* (1) Except as provided in S4.5.1(e)(2), each vehicle that is equipped with an inflatable restraint for the passenger position shall have a label attached to a location on the dashboard or the steering wheel hub that is clearly visible from all front seating positions. The label need not be permanently affixed to the vehicle. This label shall conform in content to the label shown in Figure 7 of this standard, and shall comply with the requirements of S4.5.1(e)(1)(i) through S4.5.1(e)(1)(iii).

(i) The heading area shall be yellow with the word ''WARNING'' and the alert symbol in black.

(ii) The message area shall be white with black text. The message area shall be no less than 30 cm^2 (4.7 in^2).

(iii) If the vehicle does not have a back seat, the label shown in Figure 7 may be modified by omitting the statement: ''The back seat is the safest place for children 12 and under.''

(2) Vehicles certified to meet the requirements specified in S19, S21, and S23, that are equipped with an inflatable restraint for the passenger position shall have a label attached to a location on the dashboard or the steering wheel hub that is clearly visible from all front seating positions. The label need not be permanently affixed to the vehicle. This label shall conform in content to the label shown in Figure 9 of this standard, and shall comply with the requirements of S4.5.1(e)(2)(i) through S4.5.1(e)(2)(iii).

(i) The heading area shall be yellow with black text.

(ii) The message area shall be white with black text. The message area shall be no less than 30 cm^2 (4.7 in^2).

(iii) If the vehicle does not have a back seat, the label shown in Figure 9 may be modified by omitting the statement: ''The back seat is the safest place for children.''

(f) *Information to appear in owner's manual.* (1) The owner's manual for any vehicle equipped with an inflatable restraint system shall include an accurate description of the vehicle's air bag system in an easily understandable format. The owner's manual shall include a statement to the effect that the vehicle is equipped with an air bag and lap/shoulder belt at both front outboard seating positions, and that the air bag is a supplemental restraint at those seating positions. The information shall emphasize that all occupants, including the driver, should always wear their seat belts whether or not an air bag is also provided at their seating position to minimize the risk of severe injury or death in the event of a crash. The owner's manual shall also provide any necessary precautions regarding the proper positioning of occupants, including children, at seating positions equipped with air bags to ensure maximum safety protection for those occupants. The owner's manual shall also explain that no objects should be placed over or near the air bag on the instrument panel, because any such objects could cause harm if the vehicle is in a crash severe enough to cause the air bag to inflate.

(2) For any vehicle certified to meet the requirements specified in S14.5, S15, S17, S19, S21, S23, and S25, the manufacturer shall also include in the vehicle owner's manual a discussion of the advanced passenger air bag system installed in the vehicle. The discussion

shall explain the proper functioning of the advanced air bag system and shall provide a summary of the actions that may affect the proper functioning of the system. The discussion shall include, at a minimum, accurate information on the following topics:

(i) A presentation and explanation of the main components of the advanced passenger air bag system.

(ii) An explanation of how the components function together as part of the advanced passenger air bag system.

(iii) The basic requirements for proper operation, including an explanation of the actions that may affect the proper functioning of the system.

(iv) For vehicles certified to meet the requirements of S19.2, S21.2 or S23.2, a complete description of the passenger air bag suppression system installed in the vehicle, including a discussion of any suppression zone.

(v) An explanation of the interaction of the advanced passenger air bag system with other vehicle components, such as seat belts, seats or other components.

(vi) A summary of the expected outcomes when child restraint systems, children and small teenagers or adults are both properly and improperly positioned in the passenger seat, including cautionary advice against improper placement of child restraint systems.

(vii) For vehicles certified to meet the requirements of S19.2, S21.2 or S23.2, a discussion of the telltale light, specifying its location in the vehicle and explaining when the light is illuminated.

(viii) Information on how to contact the vehicle manufacturer concerning modifications for persons with disabilities that may affect the advanced air bag system.

(g) *Additional labels placed elsewhere in the vehicle interior*. The language on additional air bag warning labels placed elsewhere in the vehicle interior shall not cause confusion or contradiction of any of the statements required in the air bag sun visor label, and shall be expressed in symbols, words and abbreviations required by this standard.

S4.5.2 *Readiness indicator*. An occupant protection system that deploys in the event of a crash shall have a monitoring system with a readiness indicator. The indicator shall monitor its own readiness and shall be clearly visible from the driver's designated seating position. If the vehicle is equipped with a single readiness indicator for both a driver and passenger air bag, and if the vehicle is equipped with an on-off switch permitted by S4.5.4 of this standard, the readiness indicator shall monitor the readiness of the driver air bag when the passenger air bag has been deactivated by means of the on-off switch, and shall not illuminate solely because the passenger air bag has been deactivated by the manual on-off switch. A list of the elements of the system being monitored by the indicator shall be included with the information furnished in accordance with S4.5.1 but need not be included on the label.

S4.5.3 *Automatic belts*. Except as provided in S4.5.3.1, a seat belt assembly that requires no action by vehicle occupants (hereinafter referred to as an ''automatic belt'') may be used to meet the crash protection requirements of any option under S4. and in place of any seat belt assembly otherwise required by that option.

S4.5.3.1. An automatic belt that provides only pelvic restraint may not be used pursuant to S4.5.3 to meet the requirements of an option that requires a Type 2 seat belt assembly. An automatic belt may not be used pursuant to S4.5.3 to meet the requirements of S4.1.5.1(a)(3) for a Type 2 seat belt assembly at any seating position equipped with an inflatable restraint system pursuant to S4.1.5.2, S4.1.5.3, S4.2.6.1, or S4.2.6.2 of this standard.

S4.5.3.2 An automatic belt, furnished pursuant to S4.5.3, that provides both pelvic and upper torso restraint may have either a detachable or non-detachable upper torso portion, notwithstanding provisions of the option under which it is furnished.

S4.5.3.3 An automatic belt furnished pursuant to S4.5.3 shall:

(a) Conform to S7.1 and have a single emergency release mechanism whose components are readily accessible to a seated occupant.

(b) In place of a warning system that conforms to S7.3 of this standard, be equipped with the following warning system: At the left front designated

seating position (driver's position), a warning system that activates a continuous or intermittent audible signal for a period of not less than 4 seconds and not more than 8 seconds and that activates a continuous or flashing warning light visible to the driver for not less than 60 seconds (beginning when the vehicle ignition switch is moved to the ''on'' or the ''start'' position) when condition (A) exists simultaneously with condition (B), and that activates a continuous or flashing warning light, visible to the driver, displaying the identifying symbol for the seat belt telltale shown in Table 2 of Standard No. 101 (49 CFR 571.101), or, at the option of the manufacturer if permitted by Standard No. 101, displaying the words ''Fasten Seat Belts'' or ''Fasten Belts,'' for as long as condition (A) exists simultaneously with condition (C).

(A) The vehicle's ignition switch is moved to the ''on'' position or to the ''start'' position.

(B) The driver's automatic belt is not in use, as determined by the belt latch mechanism not being fastened, or, if the automatic belt is non-detachable, by the emergency release mechanism being in the released position. In the case of motorized automatic belts, the determination of use shall be made once the belt webbing is in its locked protective mode at the anchorage point.

(C) The belt webbing of a motorized automatic belt system is not in its locked, protective mode at the anchorage point.

S4.5.3.4 An automatic belt furnished pursuant to S4.5.3 that is not required to meet the perpendicular frontal crash protection requirements of S5.1 shall conform to the webbing, attachment hardware, and assembly performance requirements of Standard No. 209.

S4.5.3.5 A replacement automatic belt shall meet the requirements of S4.1(k) of Standard No. 209.

S4.5.4 *Passenger air bag manual cut-off device.* Passenger cars, trucks, buses, and multipurpose passenger vehicles manufactured before September 1, 2012 may be equipped with a device that deactivates the air bag installed at the right front outboard seating position in the vehicle, if all the conditions in S4.5.4.1 through S4.5.4.4 are satisfied.

S4.5.4.1 The vehicle complies with either S4.5.4.1(a) or S4.5.4.1(b).

(a) The vehicle has no forward-facing designated seating positions to the rear of the front seating positions.

(b) With the seats and seat backs adjusted as specified in S8.1.2 and S8.1.3, the distance, measured along a longitudinal horizontal line tangent to the highest point of the rear seat bottom in the longitudinal vertical plane described in either S4.5.4.1(b)(1) or S4.5.4.1(b)(2), between the rearward surface of the front seat back and the forward surface of the rear seat back is less than 720 millimeters.

(1) In a vehicle equipped with front bucket seats, the vertical plane at the centerline of the driver's seat cushion.

(2) In a vehicle equipped with front bench seating, the vertical plane which passes through the center of the steering wheel rim.

S4.5.4.2 The device is operable by means of the ignition key for the vehicle. The device shall be separate from the ignition switch for the vehicle, so that the driver must take some action with the ignition key other than inserting it or turning it in the ignition switch to deactivate the passenger air bag. Once deactivated, the passenger air bag shall remain deactivated until it is reactivated by means of the device.

S4.5.4.3 A telltale light in the interior of the vehicle shall be illuminated whenever the passenger air bag is turned off by means of the on-off switch. The telltale shall be clearly visible to occupants of all front seating positions. ''Clearly visible'' means within the normal range of vision throughout normal driving operations. The telltale:

(a) Shall be yellow;

(b) Shall have the identifying words ''PASSENGER AIR BAG OFF'' on the telltale or within 25 millimeters of the telltale;

(c) Shall remain illuminated for the entire time that the air bag is ''off'';

(d) Shall not be illuminated at any time when the air bag is ''on''; and,

(e) Shall not be combined with the readiness indicator required by S4.5.2 of this standard.

S4.5.4.4 The vehicle owner's manual shall provide, in a readily understandable format:

(a) Complete instructions on the operation of the on-off switch;

(b) A statement that the on-off switch should only be used when a member of a passenger risk group identified in the request form in Appendix B to part 595 of this chapter is occupying the right front passenger seating position; and,

(c) A warning about the safety consequences of using the on-off switch at other times.

S4.6 *Dynamic testing of manual belt systems.*

S4.6.1 Each truck and multipurpose passenger vehicle with a GVWR of 8,500 pounds or less and an unloaded weight of less than 5,500 pounds that is manufactured on or after September 1, 1991, and is equipped with a Type 2 seat belt assembly at a front outboard designated seating position pursuant to S4.1.2.3 shall meet the frontal crash protection requirements of S5.1 at those designated seating positions with a test dummy restrained by a Type 2 seat belt assembly that has been adjusted in accordance with S7.4.2. A vehicle shall not be deemed to be in noncompliance with this standard if its manufacturer establishes that it did not have reason to know in the exercise of due care that such vehicle is not in conformity with the requirement of this standard.

S4.6.2 Any manual seat belt assembly subject to the requirements of S5.1 of this standard by virtue of any provision of this standard other than S4.1.2.1(c)(2) does not have to meet the requirements of S4.2(a)–(f) and S4.4 of Standard No. 209 (§571.209).

S4.6.3 Any manual seat belt assembly subject to the requirements of S5.1 of this standard by virtue of S4.1.2.1(c)(2) does not have to meet the elongation requirements of S4.2(c), S4.4(a)(2), S4.4(b)(4), and S4.4(b)(5) of Standard No. 209 (§571.209).

S4.7 *Incorporation by reference.* Society of Automotive Engineers (SAE) Recommended Practice J211/1 rev. Mar 95, ''Instrumentation for Impact Test—Part 1—Electronic Instrumentation,'' (SAE J211/1 rev. Mar 95) is incorporated by reference in sections S4.13, S6.6, S13.1, S15.3.6, S19.4.4, S21.5.5, S23.5.5, and S25.4, Department of Defense MIL–S–13192P, 1988, ''Military Specification, Shoes, Men's, Dress, Oxford'', Amendment 1, October 14, 1994 (MIL–S–13192P) is incorporated by reference in section S8.1.8, and Department of Defense MIL–S–21711E, 1982, ''Military Specification, Shoes, Women's'', Amendment 2, October 14, 1994 (MIL–S–21711E) is incorporated by reference in section S16.2.5, and are thereby made part of this standard. The Director of the Federal Register approved the material incorporated by reference in accordance with 5 U.S.C. 552 (a) and 1 CFR Part 51. A copy of SAE J211/1 rev. Mar 95 may be obtained from SAE at the Society of Automotive Engineers, Inc., 400 Commonwealth Drive, Warrendale, PA 15096. A copy of SAE J211/1 rev. Mar 95 and copies of MIL–S–13192P and MIL–S–21711E may be inspected at NHTSA's technical reference library, 400 Seventh Street, S.W., Room 5109, Washington, DC, or at the Office of the Federal Register, 800 North Capitol Street, N.W., Suite 700, Washington, DC.

S4.8 *Selection of compliance options.* Where manufacturer options are specified, the manufacturer shall select the option by the time it certifies the vehicle and may not thereafter select a different option for the vehicle. Each manufacturer shall, upon request from the National Highway Traffic Safety Administration, provide information regarding which of the compliance options it has selected for a particular vehicle or make/model.

S4.9 *Values and tolerances.* Wherever a range of values or tolerances are specified, requirements shall be met at all values within the range of values or tolerances. With respect to the positioning of anthropomorphic dummies, torso and spine angle tolerances shall be ± 2 degrees unless otherwise stated, and leg, thigh, foot, and arm angle tolerances shall be ± 5 degrees unless otherwise stated.

S4.10 *Metric values.* Specifications and requirements are given in metric units with English units provided for reference. The metric values are controlling.

S4.11 *Test duration for purpose of measuring injury criteria.* (a) For all barrier crashes, the injury criteria specified in

this standard shall be met when calculated based on data recorded for 300 milliseconds after the vehicle strikes the barrier. For low risk deployment tests, the injury criteria shall be met when calculated based on data recorded for 125 milliseconds after the initiation of the final stage of air bag deployment designed to deploy in a barrier crash up to 26 km/h (16 mph).

(b) The requirements for dummy containment shall continue until both the vehicle and the dummies have ceased moving.

S4.12 *Suppression systems that do not detect dummies*. For vehicles with occupant sensing systems that recognize humans and not dummies, such that the air bag or bags would not function in crash tests, the manufacturer shall provide NHTSA with information and equipment necessary to circumvent the suppression system for the crash test such that the restraint system operates as if 5th percentile adult female humans and 50th percentile adult male humans are seated in the vehicle.

S4.13 *Data channels*. For vehicles manufactured on or after September 1, 2001, all data channels used in injury criteria calculations shall be filtered using a phaseless digital filter, such as the Butterworth four-pole phaseless digital filter specified in Appendix C of SAE J211/1, rev. Mar 95, incorporated by reference in S4.7.

S5 *Occupant crash protection requirements for the 50th percentile adult male dummy*.

S5.1 *Frontal barrier crash test*.

S5.1.1 *Belted test*. (a) *Vehicles not certified to S14*. Impact a vehicle traveling longitudinally forward at any speed, up to and including 48 km/h (30 mph), into a fixed rigid barrier that is perpendicular to the line of travel of the vehicle, and at any angle up to 30 degrees in either direction from the perpendicular to the line of travel of the vehicle, under the applicable conditions of S8 and S10. The test dummy specified in S8.1.8 placed in each front outboard designated seating position shall meet the injury criteria of S6.1, S6.2(a), S6.3, S6.4(a), and S6.5 of this standard.

(b) *Vehicles certified to S14*. (1) *Vehicles certified to S14.1 or S14.2*. Impact a vehicle traveling longitudinally forward at any speed, up to and including 48 km/h (30 mph), into a fixed rigid barrier that is perpendicular to the line of travel of the vehicle under the applicable conditions of S8 and S10. The test dummy specified in S8.1.8 placed in each front outboard designated seating position shall meet the injury criteria of S6.1, S6.2(b), S6.3, S6.4(b), S6.5, and S6.6 of this standard.

(2) *Vehicles certified to S14.3 or S14.4*. Impact a vehicle traveling longitudinally forward at any speed, up to and including 56 km/h (35 mph), into a fixed rigid barrier that is perpendicular to the line of travel of the vehicle under the applicable conditions of S8 and S10. The test dummy specified in S8.1.8 placed in each front outboard designated seating position shall meet the injury criteria of S6.1, S6.2(b), S6.3, S6.4(b), S6.5, and S6.6 of this standard.

S5.1.2 *Unbelted test*. (a) *Vehicles not certified to the requirements of S13 or S14*. At the manufacturer's option, either one of the following unbelted tests shall be met:

(1) Impact a vehicle traveling longitudinally forward at any speed up to and including 48 km/h (30 mph), into a fixed rigid barrier that is perpendicular to the line of travel of the vehicle, and at any angle up to 30 degrees in either direction from the perpendicular to the line of travel of the vehicle, under the applicable conditions of S8 and S10, excluding S10.7, S10.8, and S10.9. The test dummy specified in S8.1.8 placed in each front outboard designated seating position shall meet the injury criteria of S6.1, S6.2(a), S6.3, S6.4(a), and S6.5 of this standard.

(2) Impact a vehicle traveling longitudinally forward at any speed between 32 km/h (20 mph) and 40 km/h (25 mph), inclusive, into a fixed rigid barrier that is perpendicular to the line of travel of the vehicle, and at any angle up to 30 degrees in either direction from the perpendicular to the line of travel of the vehicle, under the applicable conditions of S8 and S10, excluding S10.7, S10.8, and S10.9. The test dummy specified in S8.1.8 placed in each front outboard designated seating position shall meet the injury criteria of S6.1, S6.2(b), S6.3, S6.4(b), S6.5, and S6.6 of this standard.

(b) *Vehicles certified to the requirements of S14.* Impact a vehicle traveling longitudinally forward at any speed between 32 km/h (20 mph) and 40 km/h (25 mph), inclusive, into a fixed rigid barrier that is perpendicular to the line of travel of the vehicle, and at any angle up to 30 degrees in either direction from the perpendicular to the line of travel of the vehicle, under the applicable conditions of S8 and S10, excluding S10.7, S10.8, and S10.9. The test dummy specified in S8.1.8 placed in each front outboard designated seating position shall meet the injury criteria of S6.1, S6.2(b), S6.3, S6.4(b), S6.5, and S6.6 of this standard.

S5.2 *Lateral moving barrier crash test.* Impact a vehicle laterally on either side by a barrier moving at 20 mph under the applicable conditions of S8. The test dummy specified in S8.1.8 positioned in the front outboard designated seating position adjacent to the impacted side shall meet the injury criteria of S6.2 and S6.3 of this standard.

S5.3 *Rollover.* Subject a vehicle to a rollover test in either lateral direction at 30 mph under the applicable conditions of S8 of this standard with a test dummy specified in S8.1.8 placed in the front outboard designated seating position on the vehicle's lower side as mounted on the test platform. The test dummy shall meet the injury criteria of S6.1 of this standard.

S6 *Injury criteria for the part 572, subpart E, Hybrid III test dummy.*

S6.1 All portions of the test dummy shall be contained within the outer surfaces of the vehicle passenger compartment.

S6.2 *Head injury criteria.* (a)(1) For any two points in time, t_1 and t_2, during the event which are separated by not more than a 36 millisecond time interval and where t_1 is less than t_2, the head injury criterion (HIC_{36}) shall be determined using the resultant head acceleration at the center of gravity of the dummy head, a_r, expressed as a multiple of g (the acceleration of gravity) and shall be calculated using the expression:

$$\left[\frac{1}{(t_2 - t_1)}\int_{t_1}^{t_2} a_r dt\right]^{2.5}(t_2 - t_1)$$

(2) The maximum calculated HIC_{36} value shall not exceed 1,000.

(b)(1) For any two points in time, t_1 and t_2, during the event which are separated by not more than a 15 millisecond time interval and where t_1 is less than t_2, the head injury criterion (HIC_{15}) shall be determined using the resultant head acceleration at the center of gravity of the dummy head, a_r, expressed as a multiple of g (the acceleration of gravity) and shall be calculated using the expression:

$$\left[\frac{1}{(t_2 - t_1)}\int_{t_1}^{t_2} a_r dt\right]^{2.5}(t_2 - t_1)$$

(2) The maximum calculated HIC_{15} value shall not exceed 700.

S6.3 The resultant acceleration calculated from the output of the thoracic instrumentation shown in drawing 78051.218, revision R incorporated by reference in part 572, subpart E of this chapter shall not exceed 60 g's, except for intervals whose cumulative duration is not more than 3 milliseconds.

S6.4 *Chest deflection.* (a) Compressive deflection of the sternum relative to the spine shall not exceed 76 mm (3.0 in).

(b) Compressive deflection of the sternum relative to the spine shall not exceed 63 mm (2.5 in).

S6.5 The force transmitted axially through each upper leg shall not exceed 2250 pounds.

S6.6 *Neck injury.* When measuring neck injury, each of the following injury criteria shall be met.

(a) *Nij.*

(1) The shear force (Fx), axial force (Fz), and bending moment (My) shall be measured by the dummy upper neck load cell for the duration of the crash event as specified in S4.11. Shear force, axial force, and bending moment shall be filtered for Nij purposes at SAE J211/1 rev. Mar 95 Channel Frequency Class 600 (see S4.7).

(2) During the event, the axial force (Fz) can be either in tension or compression while the occipital condyle

bending moment (Mocy) can be in either flexion or extension. This results in four possible loading conditions for Nij: tension-extension (Nte), tension-flexion (Ntf), compression-extension (Nce), or compression-flexion (Ncf).

(3) When calculating Nij using equation S6.6(a)(4), the critical values, Fzc and Myc, are:

(i) Fzc = 6806 N (1530 lbf) when Fz is in tension

(ii) Fzc = 6160 N (1385 lbf) when Fz is in compression

(iii) Myc = 310 Nm (229 lbf-ft) when a flexion moment exists at the occipital condyle

(iv) Myc = 135 Nm (100 lbf-ft) when an extension moment exists at the occipital condyle.

(4) At each point in time, only one of the four loading conditions occurs and the Nij value corresponding to that loading condition is computed and the three remaining loading modes shall be considered a value of zero. The expression for calculating each Nij loading condition is given by:

Nij = (Fz/Fzc) + (Mocy/Myc)

(5) None of the four Nij values shall exceed 1.0 at any time during the event.

(b) *Peak tension*. Tension force (Fz), measured at the upper neck load cell, shall not exceed 4170 N (937 lbf) at any time.

(c) *Peak compression*. Compression force (Fz), measured at the upper neck load cell, shall not exceed 4000 N (899 lbf) at any time.

S6.7 Unless otherwise indicated, instrumentation for data acquisition, data channel frequency class, and moment calculations are the same as given for the 49 CFR Part 572, Subpart E Hybrid III test dummy.

S7. *Seat belt assembly requirements*. As used in this section, a law enforcement vehicle means any vehicle manufactured primarily for use by the United States or by a State or local government for police or other law enforcement purposes.

S7.1 *Adjustment*.

S7.1.1 Except as specified in S7.1.1.1 and S7.1.1.2, the lap belt of any seat belt assembly furnished in accordance with S4.1.2 shall adjust by means of any emergency-locking or automatic-locking retractor that conforms to § 571.209 to fit persons whose dimensions range from those of a 50th percentile 6-year-old child to those of a 95th percentile adult male and the upper torso restraint shall adjust by means of an emergency-locking retractor or a manual adjusting device that conforms to § 571.209 to fit persons whose dimensions range from those of a 5th percentile adult female to those of a 95th percentile adult male, with the seat in any position, the seat back in the manufacturer's nominal design riding position, and any adjustable anchorages adjusted to the manufacturer's nominal design position for a 50th percentile adult male occupant. However, an upper torso restraint furnished in accordance with S4.1.2.3.1(a) shall adjust by means of an emergency-locking retractor that conforms to § 571.209.

S7.1.1.1 A seat belt assembly installed at the driver's seating position shall adjust to fit persons whose dimensions range from those of a 5th-percentile adult female to those of a 95th-percentile adult male.

S7.1.1.2 (a) A seat belt assembly installed in a motor vehicle other than a forward control vehicle at any designated seating position other than the outboard positions of the front and second seats shall adjust either by a retractor as specified in S7.1.1 or by a manual adjusting device that conforms to § 571.209.

(b) A seat belt assembly installed in a forward control vehicle at any designated seating position other than the front outboard seating positions shall adjust either by a retractor as specified in S7.1.1 or by a manual adjusting device that conforms to § 571.209.

(c) A seat belt assembly installed in a forward-facing rear outboard seating position in a law enforcement vehicle shall adjust either by a retractor as specified in S7.1.1 or by a manual adjusting device that conforms to § 571.209.

S7.1.1.3 A Type 1 lap belt or the lap belt portion of any Type 2 seat belt assembly installed at any forward-facing outboard designated seating position of a vehicle with a gross vehicle weight rating of 10,000 pounds or less to comply with a requirement of this standard, except walk-in van-type vehicles

and school buses, and except in rear seating positions in law enforcement vehicles, shall meet the requirements of S7.1 by means of an emergency locking retractor that conforms to Standard No. 209 (49 CFR 571.209).

S7.1.1.4 Notwithstanding the other provisions of S7.1—S7.1.1.3, emergency-locking retractors on belt assemblies located in positions other than front outboard designated seating postions may be equipped with a manual webbing adjustment device capable of causing the retractor that adjusts the lap belt to lock when the belt is buckled.

S7.1.1.5 Passenger cars, and trucks, buses, and multipurpose passenger vehicles with a GVWR of 10,000 pounds or less manufactured on or after September 1, 1995 shall meet the requirements of S7.1.1.5(a), S7.1.1.5(b) and S7.1.1.5(c), subject to S7.1.1.5(d).

(a) Each designated seating position, except the driver's position, and except any right front seating position that is equipped with an automatic belt, that is in any motor vehicle, except walk-in van-type vehicles and vehicles manufactured to be sold exclusively to the U.S. Postal Service, and that is forward-facing or can be adjusted to be forward-facing, shall have a seat belt assembly whose lap belt portion is lockable so that the seat belt assembly can be used to tightly secure a child restraint system. The means provided to lock the lap belt or lap belt portion of the seat belt assembly shall not consist of any device that must be attached by the vehicle user to the seat belt webbing, retractor, or any other part of the vehicle. Additionally, the means provided to lock the lap belt or lap belt portion of the seat belt assembly shall not require any inverting, twisting or otherwise deforming of the belt webbing.

(b) If the means provided pursuant to S7.1.1.5(a) to lock the lap belt or lap belt portion of any seat belt assembly makes it necessary for the vehicle user to take some action to activate the locking feature, the vehicle owner's manual shall include a description in words and/or diagrams describing how to activate the locking feature so that the seat belt assembly can tightly secure a child restraint system and how to deactivate the locking feature to remove the child restraint system.

(c) Except for seat belt assemblies that have no retractor or that are equipped with an automatic locking retractor, compliance with S7.1.1.5(a) is demonstrated by the following procedure:

(1) With the seat in any adjustment position, buckle the seat belt assembly. Complete any procedures recommended in the vehicle owner's manual, pursuant to S7.1.1.5(b), to activate any locking feature for the seat belt assembly.

(2) Locate a reference point A on the safety belt buckle. Locate a reference point B on the attachment hardware or retractor assembly at the other end of the lap belt or lap belt portion of the seat belt assembly. Adjust the lap belt or lap belt portion of the seat belt assembly pursuant to S7.1.1.5(c)(1) as necessary so that the webbing between points A and B is at the maximum length allowed by the belt system. Measure and record the distance between points A and B along the longitudinal centerline of the webbing for the lap belt or lap belt portion of the seat belt assembly.

(3) Readjust the belt system so that the webbing between points A and B is at any length that is 5 inches or more shorter than the maximum length of the webbing.

(4) Apply a pre-load of 10 pounds, using the webbing tension pull device described in Figure 5 of this standard, to the lap belt or lap belt portion of the seat belt assembly in a vertical plane parallel to the longitudinal axis of the vehicle and passing through the seating reference point of the designated seating position whose belt system is being tested. Apply the pre-load in a horizontal direction toward the front of the vehicle with a force application angle of not less than 5 degrees nor more than 15 degrees above the horizontal. Measure and record the length of belt between points A and B along the longitudinal centerline of the webbing for the lap belt or lap belt portion of the seat belt assembly while the pre-load is being applied.

(5) Apply a load of 50 pounds, using the webbing tension pull device described in Figure 5 of this standard, to the lap belt or lap belt portion of the

seat belt assembly in a vertical plane parallel to the longitudinal axis of the vehicle and passing through the seating reference point of the designated seating position whose belt system is being tested. The load is applied in a horizontal direction toward the front of the vehicle with a force application angle of not less than 5 degrees nor more than 15 degrees above the horizontal at an onset rate of not more than 50 pounds per second. Attain the 50 pound load in not more than 5 seconds. If webbing sensitive emergency locking retroactive are installed as part of the lap belt assembly or lap belt portion of the seat belt assembly, apply the load at a rate less than the threshold value for lock-up specified by the manufacturer. Maintain the 50 pound load for at least 5 seconds before the measurements specified in S7.1.1.5(c)(6) are obtained and recorded.

(6) Measure and record the length of belt between points A and B along the longitudinal centerline of the webbing for the lap belt or lap belt portion of the seat belt assembly.

(7) The difference between the measurements recorded under S7.1.1.5(c) (6) and (4) shall not exceed 2 inches.

(8) The difference between the measurements recorded under S7.1.1.5(c) (6) and (2) shall be 3 inches or more.

(d) For passenger cars, and trucks and multipurpose passenger vehicles with a GVWR of 8,500 pounds or less, and buses with a GVWR of 10,000 lb or less manufactured on or after September 1, 2012, each designated seating position that is equipped with a child restraint anchorage system meeting the requirements of § 571.225 need not meet the requirements of this S7.1.1.5.

S7.1.2 Except as provided in S7.1.2.1, S7.1.2.2, and S7.1.2.3, for each Type 2 seat belt assembly which is required by Standard No. 208 (49 CFR 571.208), the upper anchorage, or the lower anchorage nearest the intersection of the torso belt and the lap belt, shall include a movable component which has a minimum of two adjustment positions. The distance between the geometric center of the movable component at the two extreme adjustment positions shall be not less than five centimeters, measured linearly. If the component required by this paragraph must be manually moved between adjustment positions, information shall be provided in the owner's manual to explain how to adjust the seat belt and warn that misadjustment could reduce the effectiveness of the safety belt in a crash.

S7.1.2.1 As an alternative to meeting the requirement of S7.1.2, a Type 2 seat belt assembly shall provide a means of automatically moving the webbing in relation to either the upper anchorage, or the lower anchorage nearest the intersection of the torso belt and the lap belt. The distance between the midpoint of the webbing at the contact point of the webbing and the anchorage at the extreme adjustment positions shall be not less than five centimeters, measured linearly.

S7.1.2.2 The requirements of S7.1.2 do not apply the anchorages of a Type 2 seat belt assembly installed:

(a) At a seat which is adjustable fore and aft while the vehicle is in motion and whose seat frame above the fore-and-aft adjuster is part of each of the assembly's seat belt anchorages, as defined in S3 of Standard No. 210 (49 CFR 571.210).

(b) At a seat that is not adjustable fore and aft while the vehicle is in motion.

S7.1.2.3 The requirements of S7.1.2 do not apply to any truck with a gross vehicle weight rating of more than 8,500 pounds manufactured before January 1, 1998.

S7.1.3 The intersection of the upper torso belt with the lap belt in any Type 2 seat belt assembly furnished in accordance with S4.1.1 or S4.1.2, with the upper torso manual adjusting device, if provided, adjusted in accordance with the manufacturer's instructions, shall be at least 6 inches from the front vertical centerline of a 50th-percentile adult male occupant, measured along the centerline of the lap belt, with the seat in its rearmost and lowest adjustable position and with the seat back in the manufacturer's nominal design riding position.

S7.1.4 The weights and dimensions of the vehicle occupants referred to in this standard are as follows:

	50th-percentile 6-year old child	5th-percentile adult female	50th-percentile adult male	95th-percentile adult male
Weight	47.3 pounds	102 pounds	164 pounds ±3	215 pounds.
Erect sitting height	25.4 inches	30.9 inches	35.7 inches±.1	38 inches.
Hip breadth (sitting)	8.4 inches	12.8 inches	14.7 inches±.7	16.5 inches.
Hip circumference (sitting)	23.9 inches	36.4 inches	42 inches	47.2 inches.
Waist circumference (sitting)	20.8 inches	23.6 inches	32 inches±.6	42.5 inches.
Chest depth		7.5 inches	9.3 inches±.2	10.5 inches.
Chest circumference:				
(nipple)		30.5 inches		
(upper)		29.8 inches	37.4 inches±.6	44.5 inches.
(lower)		26.6 inches		

S7.2 *Latch mechanism.* Except as provided in S7.2(e), each seat belt assembly installed in any vehicle shall have a latch mechanism that complies with the requirements specified in S7.2(a) through (d).

(a) The components of the latch mechanism shall be accessible to a seated occupant in both the stowed and operational positions;

(b) The latch mechanism shall release both the upper torso restraint and the lap belt simultaneously, if the assembly has a lap belt and an upper torso restraint that require unlatching for release of the occupant;

(c) The latch mechanism shall release at a single point; and;

(d) The latch mechanism shall release by a pushbutton action.

(e) The requirements of S7.2 do not apply to any automatic belt assembly. The requirements specified in S7.2(a) through (c) do not apply to any safety belt assembly installed at a forward-facing rear outboard seating position in a law enforcement vehicle.

S7.3 (a) A seat belt assembly provided at the driver's seating position shall be equipped with a warning system that, at the option of the manufacturer, either—

(1) Activates a continuous or intermittent audible signal for a period of not less than 4 seconds and not more than 8 seconds and that activates a continuous or flashing warning light visible to the driver displaying the identifying symbol for the seat belt telltale shown in Table 2 of FMVSS 101 or, at the option of the manufacturer if permitted by FMVSS 101, displaying the words ''Fasten Seat Belts'' or ''Fasten Belts'', for not less than 60 seconds (beginning when the vehicle ignition switch is moved to the ''on'' or the ''start'' position) when condition (b) exists simultaneously with condition (c), or that

(2) Activates, for a period of not less than 4 seconds and not more than 8 seconds (beginning when the vehicle ignition switch is moved to the ''on'' or the ''start'' position), a continuous or flashing warning light visible to the driver, displaying the identifying symbol of the seat belt telltale shown in Table 2 of FMVSS 101 or, at the option of the manufacturer if permitted by FMVSS 101, displaying the words ''Fasten Seat Belts'' or ''Fasten Belts'', when condition (b) exists, and a continuous or intermittent audible signal when condition (b) exists simultaneously with condition (c).

(b) The vehicle's ignition switch is moved to the ''on'' position or to the ''start'' position.

(c) The driver's lap belt is not in use, as determined, at the option of the manufacturer, either by the belt latch mechanism not being fastened, or by the belt not being extended at least 4 inches from its stowed position.

S7.4 *Seat belt comfort and convenience.*

(a) *Automatic seat belts.* Automatic seat belts installed in any vehicle, other than walk-in van-type vehicles, which has a gross vehicle weight rating of 10,000 pounds or less, and which is manufactured on or after September 1, 1986, shall meet the requirements of S7.4.1, S7.4.2, and S7.4.3.

(b) *Manual seat belts.*

(1) *Vehicles manufactured after September 1, 1986.* Manual seat belts installed in any vehicle, other than manual Type 2 belt systems installed in the front outboard seating positions in passenger cars or manual belts in walk-in van-type vehicles, which have a gross vehicle weight rating of 10,000 pounds

or less, shall meet the requirements of S7.4.3, S7.4.4, S7.4.5, and S7.4.6.

(2) *Vehicles manufactured after September 1, 1989.*

(i) If the automatic restraint requirement of S4.1.4 is rescinded pursuant to S4.1.5, then manual seat belts installed in a passenger car shall meet the requirements of S7.1.1.3(a), S7.4.2, S7.4.3, S7.4.4, S7.4.5, and S7.4.6.

(ii) Manual seat belts installed in a bus, multipurpose passenger vehicle and truck with a gross vehicle weight rating of 10,000 pounds or less, except for walk-in van-type vehicles, shall meet the requirements of S7.4.3, S7.4.4, S7.4.5, and S7.4.6.

S7.4.1 *Convenience hooks.* Any manual convenience hook or other device that is provided to stow seat belt webbing to facilitate entering or exiting the vehicle shall automatically release the webbing when the automatic belt system is otherwise operational and shall remain in the released mode for as long as (a) exists simultaneously with (b), or, at the manufacturer's option, for as long as (a) exists simultaneously with (c)—

(a) The vehicle ignition switch is moved to the ''on'' or ''start'' position;

(b) The vehicle's drive train is engaged;

(c) The vehicle's parking brake is in the released mode (nonengaged).

S7.4.2 *Webbing tension-relieving device.* Each vehicle with an automatic seat belt assembly or with a Type 2 manual seat belt assembly that must meet the occupant crash protection requirements of S5.1 of this standard installed at a front outboard designated seating position, and each vehicle with a Type 2 manual seat belt assembly installed at a rear outboard designated seating position in compliance with a requirement of this standard, that has either automatic or manual tension-relieving devices permitting the introduction of slack in the webbing of the shoulder belt (e.g., ''comfort clips'' or ''window-shade'' devices) shall:

(a) Comply with the requirements of S5.1 with the shoulder belt webbing adjusted to introduce the maximum amount of slack recommended by the vehicle manufacturer pursuant to S7.4.2(b).

(b) Have a section in the vehicle owner's manual that explains how the tension-relieving device works and specifies the maximum amount of slack (in inches) recommended by the vehicle manufacturer to be introduced into the shoulder belt under normal use conditions. The explanation shall also warn that introducing slack beyond the amount specified by the manufacturer could significantly reduce the effectiveness of the shoulder belt in a crash; and

(c) Have, except for open-body vehicles with no doors, an automatic means to cancel any shoulder belt slack introduced into the belt system by a tension-relieving device. In the case of an automatic safety belt system, cancellation of the tension-relieving device shall occur each time the adjacent vehicle door is opened. In the case of a manual seat belt required to meet S5.1, cancellation of the tension-relieving device shall occur, at the manufacturer's option, either each time the adjacent door is opened or each time the latchplate is released from the buckle. In the case of a Type 2 manual seat belt assembly installed at a rear outboard designated seating position, cancellation of the tension-relieving device shall occur, at the manufacturer's option either each time the door designed to allow the occupant of that seating position entry and egress of the vehicle is opened or each time the latchplate is released from the buckle. In the case of open-body vehicles with no doors, cancellation of the tension-relieving device may be done by a manual means.

S7.4.3 *Belt contact force.* Except for manual or automatic seat belt assemblies that incorporate a webbing tension-relieving device, the upper torso webbing of any seat belt assembly shall not exert more than 0.7 pounds of contact force when measured normal to and one inch from the chest of an anthropomorphic test dummy, positioned in accordance with S10 of this standard in the seating position for which that seat belt assembly is provided, at the point where the centerline of the torso belt crosses the midsagittal line on the dummy's chest.

S7.4.4 *Latchplate access.* Any seat belt assembly latchplate that is located outboard of a front outboard seating position in accordance with S4.1.2 shall also be located within the outboard reach envelope of either the outboard arm or the inboard arm described in S10.7 and Figure 3 of this standard, when the latchplate is in its normal stowed position and any adjustable anchorages are adjusted to the manufacturer's nominal design position for a 50th percentile adult male occupant. There shall be sufficient clearance between the vehicle seat and the side of the vehicle interior to allow the test block defined in Figure 4 of this standard unhindered transit to the latchplate or buckle.

S7.4.5 *Retraction.* When tested under the conditions of S8.1.2 and S8.1.3, with anthropomorphic dummies whose arms have been removed and which are positioned in accordance with S10 of this standard in the front outboard seating positions and restrained by the belt systems for those positions, the torso and lap belt webbing of any of those seat belt systems shall automatically retract to a stowed position either when the adjacent vehicle door is in the open position and the seat belt latchplate is released, or, at the option of the manufacturer, when the latchplate is released. That stowed position shall prevent any part of the webbing or hardware from being pinched when the adjacent vehicle door is closed. A belt system with a tension-relieving device in an open-bodied vehicle with no doors shall fully retract when the tension-relieving device is deactivated. For the purposes of these retraction requirements, outboard armrests, which are capable of being stowed, on vehicle seats shall be placed in their stowed position.

S7.4.6 *Seat belt guides and hardware.*

S7.4.6.1 (a) Any manual seat belt assembly whose webbing is designed to pass through the seat cushion or between the seat cushion and seat back shall be designed to maintain one of the following three seat belt parts (the seat belt latchplate, the buckle, or the seat belt webbing) on top of or above the seat cushion under normal conditions (i.e., conditions other than when belt hardware is intentionally pushed behind the seat by a vehicle occupant). In addition, the remaining two seat belt parts must be accessible under normal conditions.

(b) The requirements of S7.4.6.1(a) do not apply to: (1) seats whose seat cushions are movable so that the seat back serves a function other than seating, (2) seats which are removable, or (3) seats which are movable so that the space formerly occupied by the seat can be used for a secondary function.

S7.4.6.2 The buckle and latchplate of a manual seat belt assembly subject to S7.4.6.1 shall not pass through the guides or conduits provided for in S7.4.6.1 and fall behind the seat when the events listed below occur in the order specified: (a) The belt is completely retracted or, if the belt is nonretractable, the belt is unlatched; (b) the seat is moved to any position to which it is designed to be adjusted; and (c) the seat back, if foldable, is folded forward as far as possible and then moved backward into position. The inboard receptacle end of a seat belt assembly installed at a front outboard designated seating position shall be accessible with the center arm rest in any position to which it can be adjusted (without having to move the armrest).

S8. *Test conditions.*

S8.1 *General conditions.* The following conditions apply to the frontal, lateral, and rollover tests. Except for S8.1.1(d), the following conditions apply to the alternative unbelted sled test set forth in S13 from March 19, 1997 until September 1, 2001.

S8.1.1 Except as provided in paragraph (c) of S8.1.1, the vehicle, including test devices and instrumentation, is loaded as follows:

(a) *Passenger cars.* A passenger car is loaded to its unloaded vehicle weight plus its rated cargo and luggage capacity weight, secured in the luggage area, plus the weight of the necessary anthropomorphic test devices.

(b) *Multipurpose passenger vehicles, trucks, and buses.* A multipurpose passenger vehicle, truck, or bus is loaded to its unloaded vehicle weight plus 300 pounds or its rated cargo and luggage

capacity weight, whichever is less, secured in the load carrying area and distributed as nearly as possible in proportion to its gross axle weight ratings, plus the weight of the necessary anthropomorphic test devices. For the purposes of §8.1.1, unloaded vehicle weight does not include the weight of work-performing accessories. Vehicles are tested to a maximum unloaded vehicle weight of 5,500 pounds.

(c) *Fuel system capacity*. With the test vehicle on a level surface, pump the fuel from the vehicle's fuel tank and then operate the engine until it stops. Then, add Stoddard solvent to the test vehicle's fuel tank in an amount which is equal to not less than 92 and not more than 94 percent of the fuel tank's usable capacity stated by the vehicle's manufacturer. In addition, add the amount of Stoddard solvent needed to fill the entire fuel system from the fuel tank through the engine's induction system.

(d) *Vehicle test attitude*. Determine the distance between a level surface and a standard reference point on the test vehicle's body, directly above each wheel opening, when the vehicle is in its ''as delivered'' condition. The ''as delivered'' condition is the vehicle as received at the test site, with 100 percent of all fluid capacities and all tires inflated to the manufacturer's specifications as listed on the vehicle's tire placard. Determine the distance between the same level surface and the same standard reference points in the vehicle's ''fully loaded condition.'' The ''fully loaded condition'' is the test vehicle loaded in accordance with S8.1.1 (a) or (b), as applicable. The load placed in the cargo area shall be center over the longitudinal centerline of the vehicle. The pretest vehicle attitude shall be equal to either the as delivered or fully loaded attitude or between the as delivered attitude and the fully loaded attitude.

S8.1.2 Adjustable seats are in the adjustment position midway between the forwardmost and rearmost positions, and if separately adjustable in a vertical direction, are at the lowest position. If an adjustment position does not exist midway between the forwardmost and rearmost positions, the closest adjustment position to the rear of the midpoint is used.

S8.1.3 Place adjustable seat backs in the manufacturer's nominal design riding position in the manner specified by the manufacturer. Place any adjustable anchorages at the manufacturer's nominal design position for a 50th percentile adult male occupant. Place each adjustable head restraint in its highest adjustment position. Adjustable lumbar supports are positioned so that the lumbar support is in its lowest adjustment position.

S8.1.4 Adjustable steering controls are adjusted so that the steering wheel hub is at the geometric center of the locus it describes when it is moved through its full range of driving positions.

S8.1.5 Movable vehicle windows and vents are placed in the fully closed position, unless the vehicle manufacturer chooses to specify a different adjustment position prior to the time it certifies the vehicle.

S8.1.6 Convertibles and open-body type vehicles have the top, if any, in place in the closed passenger compartment configuration.

S8.1.7 Doors are fully closed and latched but not locked.

S8.1.8 *Anthropomorphic test dummies*.

S8.1.8.1 The anthropomorphic test dummies used for evaluation of occupant protection systems manufactured pursuant to applicable portions of S4.1.2, S4.1.3, and S4.1.4 of this standard shall conform to the requirements of subpart E of part 572 of this chapter.

S8.1.8.2 Each test dummy is clothed in a form fitting cotton stretch short sleeve shirt with above-the-elbow sleeves and above-the-knee length pants. The weight of the shirt or pants shall not exceed 0.25 pounds each. Each foot of the test dummy is equipped with a size 11XW shoe which meets the configuration size, sole, and heel thickness specifications of MIL–S 13192 change ''P'' and whose weight is 1.25±0.2 pounds.

S8.1.8.3 Limb joints are set at 1g, barely restraining the weight of the limb when extended horizontally. Leg joints are adjusted with the torso in the supine position.

S8.1.8.4 Instrumentation does not affect the motion of the dummies during impact or rollover.

S8.1.8.5 The stabilized test temperature of the test dummy is at any temperature level between 69 degrees F and 72 degrees F, inclusive.

S8.2 *Lateral moving barrier crash test conditions.* The following conditions apply to the lateral moving barrier crash test.

S8.2.1 The moving barrier, including the impact surface, supporting structure, and carriage, weighs 4,000 pounds.

S8.2.2 The impact surface of the barrier is a vertical, rigid, flat rectangle, 78 inches wide and 60 inches high, perpendicular to its direction of movement, with its lower edge horizontal and 5 inches above the ground surface.

S8.2.3 During the entire impact sequence the barrier undergoes no significant amount of dynamic or static deformation, and absorbs no significant portion of the energy resulting from the impact, except for energy that results in translational rebound movement of the barrier.

S8.2.4 During the entire impact sequence the barrier is guided so that it travels in a straight line, with no significant lateral, vertical or rotational movement.

S8.2.5 The concrete surface upon which the vehicle is tested is level, rigid and of uniform construction, with a skidnumber of 75 when measured in accordance with American Society for Testing and Materials Method E–274–65T at 40 m.p.h., omitting water delivery as specified in paragraph 7.1 of that method.

S8.2.6 The tested vehicle's brakes are disengaged and the transmission is in neutral.

S8.2.7 The barrier and the test vehicle are positioned so that at impact—

(a) The vehicle is at rest in its normal attitude;

(b) The barrier is traveling in a direction perpendicular to the longitudinal axis of the vehicle at 20 m.p.h.; and

(c) A vertical plane through the geometric center of the barrier impact surface and perpendicular to that surface passes through the driver's seating reference point in the tested vehicle.

S8.3 *Rollover test conditions.* The following conditions apply to the rollover test.

S8.3.1 The tested vehicle's brakes are disengaged and the transmission is in neutral.

S8.3.2 The concrete surface on which the test is conducted is level, rigid, of uniform construction, and of a sufficient size that the vehicle remains on it throughout the entire rollover cycle. It has a skid number of 75 when measured in accordance with American Society for Testing and Materials Method E–274–65T at 40 m.p.h. omitting water delivery as specified in paragraph 7.1 of that method.

S8.3.3 The vehicle is placed on a device, similar to that illustrated in Figure 2, having a platform in the form of a flat, rigid plane at an angle of 23° from the horizontal. At the lower edge of the platform is an unyielding flange, perpendicular to the platform with a height of 4 inches and a length sufficient to hold in place the tires that rest against it. The intersection of the inner face of the flange with the upper face of the platform is 9 inches above the rollover surface. No other restraints are used to hold the vehicle in position during the deceleration of the platform and the departure of the vehicle.

S8.3.4 With the vehicle on the test platform, the test devices remain as nearly as possible in the posture specified in S8.1.

S8.3.5 Before the deceleration pulse, the platform is moving horizontally, and perpendicularly to the longitudinal axis of the vehicle, at a constant speed of 30 m.p.h. for a sufficient period of time for the vehicle to become motionless relative to the platform.

S8.3.6 The platform is decelerated from 30 to 0 m.p.h. in a distance of not more than 3 feet, without change of direction and without transverse or rotational movement during the deceleration of the platform and the departure of the vehicle. The deceleration rate is at least 20g for a minimum of 0.04 seconds.

S8.4 *Frontal test condition.* If the vehicle is equipped with a cutoff device permitted by S4.5.4 of this standard, the device is deactivated.

S9. *Pressure vessels and explosive devices.*

S9.1 *Pressure vessels.* A pressure vessel that is continuously pressurized shall conform to the requirements of §§178.65–2, 178.65–6(b), 178.65–7, 178.65–9 (a) and (b), and 178.65–10 of this title. It shall not leak or evidence visible distortion when tested in accordance with §178.65–11(a) of this title and shall not fail in any of the ways enumerated in §178.65–11(b) of this title when hydrostatically tested to destruction. It shall not crack when flattened in accordance with §178.65–12(a) of this title to the limit specified in §178.65–12(a)(4) of this title.

S9.2 *Explosive devices.* An explosive device shall not exhibit any of the characteristics prohibited by §173.51 of this title. All explosive material shall be enclosed in a structure that is capable of containing the explosive energy without sudden release of pressure except through overpressure relief devices or parts designed to release the pressure during actuation.

S10. *Test dummy positioning procedures.*

S10.1 *Head.* The transverse instrumentation platform of the head shall be level within ½ degree. To level the head of the test dummy, the following sequences must be followed. First, adjust the position of the H point within the limits set forth in S10.4.2.1 to level the transverse instrumentation platform of the head of the test dummy. If the transverse instrumentation platform of the head is still not level, then adjust the pelvic angle of the test dummy within the limits specified in S10.4.2.2 of this standard. If the transverse instrumentation platform of the head is still not level, then adjust the neck bracket of the dummy the minimum amount necessary from the non-adjusted ''0'' setting to ensure that the transverse instrumentation platform of the head is horizontal within ½ degree. The test dummy shall remain within the limits specified in S10.4.2.1 and S10.4.2.2. after any adjustment of the neck bracket.

S10.2 *Upper Arms.*

S10.2.1 The driver's upper arms shall be adjacent to the torso with the centerlines as close to a vertical plane as possible.

S10.2.2 The passenger's upper arms shall be in contact with the seat back and the sides of the torso.

S10.3 *Hands.*

S10.3.1 The palms of the drivers test dummy shall be in contact with the outer part of the steering wheel rim at the rim's horizontal centerline. The thumbs shall be over the steering wheel rim and shall be lightly taped to the steering wheel rim so that if the hand of the test dummy is pushed upward by a force of not less than 2 pounds and not more than 5 pounds, the tape shall release the hand from the steering wheel rim.

S10.3.2 The palms of the passenger test dummy shall be in contact with the outside of the thigh. The little finger shall be in contact with the seat cushion.

S10.4 *Torso.*

S10.4.1 *Upper Torso.*

S10.4.1.1 In vehicles equipped with bench seats, the upper torso of the driver and passenger test dummies shall rest against the seat back. The midsagittal plane of the driver dummy shall be vertical and parallel to the vehicle's longitudinal centerline, and pass through the center of the steering wheel rim. The midsagittal plane of the passenger dummy shall be vertical and parallel to the vehicle's longitudinal centerline and the same distance from the vehicle's longitudinal centerline as the midsagittal plane of the driver dummy.

S10.4.1.2 In vehicles equipped with bucket seats, the upper torso of the driver and passenger test dummies shall rest against the seat back. The midsagittal plane of the driver and the passenger dummy shall be vertical and shall coincide with the longitudinal centerline of the bucket seat.

S10.4.2 *Lower Torso.*

S10.4.2.1 *H-point.* The H-points of the driver and passenger test dummies shall coincide within ½ inch in the vertical dimension and ½ inch in the horizontal dimension of a point ¼ inch below the position of the H-point determined by using the equipment and procedures specified in SAE J826 (APR 1980) except that the length of the lower leg and thigh segments of the H-point machine shall be adjusted to 16.3 and 15.8 inches, respectively, instead of

the 50th percentile values specified in Table 1 of SAE J826.

S10.4.2.2 *Pelvic angle.* As determined using the pelvic angle gage (GM drawing 78051–532, incorporated by reference in part 572, subpart E of this chapter) which is inserted into the H-point gaging hole of the dummy, the angle measured from the horizontal on the three inch flat surface of the gage shall be 22½ degrees plus or minus 2½ degrees.

S10.5 *Legs.* The upper legs of the driver and passenger test dummies shall rest against the seat cushion to the extent permitted by placement of the feet. The initial distance between the outboard knee clevis flange surfaces shall be 10.6 inches. To the extent practicable, the left leg of the driver dummy and both legs of the passenger dummy shall be in vertical longitudinal planes. To the extent practicable, the right leg of the driver dummy shall be in a vertical plane. Final adjustment to accommodate the placement of feet in accordance with S10.6 for various passenger compartment configurations is permitted.

S10.6 *Feet.*

S10.6.1 *Driver's position.*

S10.6.1.1 If the vehicle has an adjustable accelerator pedal, adjust it to the full forward position. Rest the right foot of the test dummy on the undepressed accelerator pedal with the rearmost point of the heel on the floor pan in the plane of the pedal. If the foot cannot be placed on the accelerator pedal, set it initially perpendicular to the lower leg and then place it as far forward as possible in the direction of the pedal centerline with the rearmost point of the heel resting on the floor pan. If the vehicle has an adjustable accelerator pedal and the right foot is not touching the accelerator pedal when positioned as above, move the pedal rearward until it touches the right foot. If the accelerator pedal still does not touch the foot in the full rearward position, leave the pedal in that position.

S10.6.1.2 Place the left foot on the toeboard with the rearmost point of the heel resting on the floor pan as close as possible to the point of intersection of the planes described by the toeboard and the floor pan and not on the wheelwell projection. If the foot cannot be positioned on the toeboard, set it initially perpendicular to the lower leg and place it as far forward as possible with the heel resting on the floor pan. If necessary to avoid contact with the vehicle's brake or clutch pedal, rotate the test dummy's left foot about the lower leg. If there is still pedal interference, rotate the left leg outboard about the hip the minimum distance necessary to avoid the pedal interference. For vehicles with a foot rest that does not elevate the left foot above the level of the right foot, place the left foot on the foot rest so that the upper and lower leg centerlines fall in a vertical plane.

S10.6.2 *Passenger's position.*

S10.6.2.1 *Vehicles with a flat floor pan/toeboard.* Place the right and left feet on the vehicle's toeboard with the heels resting on the floor pan as close as possible to the intersection point with the toeboard. If the feet cannot be placed flat on the toeboard, set them perpendicular to the lower leg centerlines and place them as far forward as possible with the heels resting on the floor pan.

S10.6.2.2 *Vehicles with wheelhouse projections in passenger compartment.* Place the right and left feet in the well of the floor pan/toeboard and not on the wheelhouse projection. If the feet cannot be placed flat on the toeboard, initially set them perpendicular to the lower leg centerlines and then place them as far forward as possible with the heels resting on the floor pan.

S10.7 *Test dummy positioning for latchplate access.* The reach envelopes specified in S7.4.4 of this standard are obtained by positioning a test dummy in the driver's or passenger's seating position and adjusting that seating position to its forwardmost adjustment position. Attach the lines for the inboard and outboard arms to the test dummy as described in Figure 3 of this standard. Extend each line backward and outboard to generate the compliance arcs of the outboard reach envelope of the test dummy's arms.

S10.8 *Test dummy positioning for belt contact force.* To determine compliance with S7.4.3 of this standard, position the test dummy in the vehicle in accordance with S10.1 through S10.6 of

this standard and adjust the seating position in accordance with S8.1.2 and S8.1.3 of this standard. Pull the belt webbing three inches from the test dummy's chest and release until the webbing is within one inch of the test dummy's chest and measure the belt contact force.

S10.9 *Manual belt adjustment for dynamic testing*. With the test dummy positioned in accordance with S10.1 through S10.6 of this standard and the seating position adjusted in accordance with S8.1.2 and S8.1.3 of this standard, place the Type 2 manual belt around the test dummy and fasten the latch. Remove all slack from the lap belt portion. Pull the upper torso webbing out of the retractor and allow it to retract; repeat this four times. Apply a 2 to 4 pound tension load to the lap belt. If the belt system is equipped with a tension-relieving device, introduce the maximum amount of slack into the upper torso belt that is recommended by the vehicle manufacturer in the vehicle's owner's manual. If the belt system is not equipped with a tension-relieving device, allow the excess webbing in the upper torso belt to be retracted by the retractive force of the retractor.

S11. [Reserved]

S12. *Temporary Exemption from Requirement for Inflatable Restraint System*.

S12.1 *Scope*. This section establishes procedures for filing and processing applications for temporary exemption from the requirements in this standard that vehicles be equipped with inflatable restraint systems.

S12.2 *Definitions*.

Line means a name that a manufacturer applies to a group of motor vehicles of the same make which have the same body or chassis, or otherwise are similar in construction or design. A *line* may, for example, include 2-door, 4-door, station wagon, and hatchback vehicles of the same make.

S12.3 *Standard of review*. In order to receive a temporary exemption from the inflatable restraint requirement, a vehicle manufacturer must demonstrate in its application that there has been a disruption in the supply of one or more inflatable restraint system components, or a disruption in the use and installation by the manufacturer of any such component due to unavoidable events not under the control of the manufacturer, which will prevent a manufacturer from meeting its anticipated production volume of vehicles with inflatable restraint systems.

S12.4 *Exemption applications—General requirements*. Each application for a temporary exemption from the inflatable restraint requirements must—

(a) Be written in the English language;

(b) Be submitted in three copies to: Administrator, National Highway Traffic Safety Administration, 400 Seventh Street, SW., Washington, DC 20590;

(c) State the full name and address of the manufacturer, the nature of its organization (individual, partnership, corporation, etc.), and the name of the State or country under the laws of which it is organized;

(d) Identify the motor vehicle line or lines for which the temporary exemption is being sought;

(e) Set forth in full the data, views, and arguments of the manufacturer that would support granting the temporary exemption, including the specific information required by S12.5; and

(f) Specify and segregate any part of the information and data submitted in the application that should be withheld from public disclosure in accordance with part 512 of this chapter.

S12.5 *Exemption applications—Specific content requirements*. Each application for a temporary exemption from the inflatable restraint requirement must include:

(a) A clear and specific identification of any component in the inflatable restraint system that has become unavailable due to circumstances beyond the manufacturer's control, and a diagram showing the location of such component within the restraint system and within the vehicle;

(b) A clear and specific explanation of the cause or causes of the disruption in the supply of the component, and a showing that such disruption is beyond the control of the manufacturer;

(c) An estimate of the length of time that will be needed to correct the disruption and again incorporate the subject components into current production, or an explanation of why it is not possible to provide such an estimate;

(d) A complete statement of the bases for the manufacturer's belief that NHTSA should grant a temporary exemption in response to this application;

(e) An unconditional statement by the manufacturer that it will recall every vehicle for which a temporary exemption is requested in the application, to install all missing inflatable restraint systems;

(f) A plan setting forth steps the manufacturer will take to ensure that as many exempted vehicles as possible will be returned for installation of missing inflatable restraint systems;

(g) A proposed reasonable period of time after the disruption in the supply of inflatable restraint system components is corrected that the manufacturer estimates will ensure a sufficient quantity of components for both anticipated production and retrofit of those vehicles for which a temporary exemption is requested in the application, so that the vehicle manufacturer can recall those vehicles for which a temporary exemption is requested and install inflatable restraint systems in them, together with a demonstration of why the manufacturer believes this proposed period of time is reasonable for completing this recall, or an explanation of why it is not possible to provide such an estimate;

(h) A proposed date for termination of the exemption;

(i) A proposed date by which all exempted vehicles will have been recalled and had inflatable restraints installed (assuming owners returned their vehicles in a timely matter in response to a first notice by the manufacturer), or an explanation of why it is not possible to provide such an estimate.

S12.6 *Processing an application for a temporary exemption.* (a) NHTSA will process any application for temporary exemption that contains the information specified in S12.4 and S12.5. If an application fails to provide the information specified in S12.4 and S12.5, NHTSA will not process the application, but will advise the manufacturer of the information that must be provided if the agency is to process the application.

(b) Notice of each application for temporary exemption shall be published in the FEDERAL REGISTER.

(c) NHTSA will issue its decision to grant or deny the requested temporary exemption not later than 15 days after the agency receives a complete petition, as defined in paragraph (a). However, a failure to issue a decision within this time does not result in a grant of the petition.

(d) Notice of each decision to grant or deny a temporary exemption, and the reasons for granting or denying it, will be published in the FEDERAL REGISTER.

(e) The Administrator may attach such conditions as he or she deems appropriate to a temporary exemption, including but not limited to requiring manufacturers to provide progress reports at specified times (including, as appropriate and to the extent possible, estimate of dates and times concerning when a supply disruption will be corrected and when recall will take place) and requiring manufacturers to take specific steps to ensure that as many exempted vehicles as possible will be returned for installation of missing inflatable restraint systems.

(f) Unless a later effective date is specified in a notice announcing an agency decision to grant a temporary exemption, a temporary exemption from the inflatable restraint requirement will become effective upon the date the decision is issued.

S12.7 *Labels and written notice announcing temporary exemption.*

S12.7.1 It shall be a condition of every temporary exemption from the inflatable restraint requirement that the manufacturer of exempted vehicles comply with the provisions of S12.7.2 and S12.7.3.

S12.7.2 (a) The manufacturer of any vehicle granted a temporary exemption from the inflatable restraint requirement shall affix a label within the passenger compartment of such vehicle. The label shall set forth the following information in block capital letters and numerals not less than three thirty-seconds of an inch high:

THIS VEHICLE DOES NOT CONTAIN AN AIR BAG IN CONFORMANCE WITH THE FEDERAL MOTOR VEHICLE SAFETY

STANDARD FOR OCCUPANT CRASH PROTECTION. IT WAS EXEMPTED PURSUANT TO NHTSA EXEMPTION NO. (insert number assigned by NHTSA).

(b) This label shall not be removed until after the vehicle manufacturer has recalled the vehicle and installed an inflatable restraint system at those seating positions for which it was granted an exemption.

S12.7.3 The manufacturer of any vehicle that is delivered without an inflatable restraint system, pursuant to a temporary exemption granted under this section, shall, at the time of delivery of the vehicle, provide a written notice to the dealer to whom the vehicle is delivered. The manufacturer shall also provide a written notice by registered mail to the first purchaser of the vehicle for purposes other than resale, within two weeks after purchase. Unless otherwise provided for by the Administrator in the exemption, such notice shall provide the following information:

(a) This vehicle does not conform to Federal Motor Vehicle Safety Standard No. 208, because it is not equipped with an inflatable restraint at (insert the affected seating positions).

(b) The vehicle was allowed to be sold pursuant to NHTSA Exemption No. (insert appropriate exemption number).

(c) The reason this vehicle was exempted from the requirement for an inflatable restraint was because of factors beyond the manufacturer's control.

(d) The manufacturer will recall this vehicle not later than (insert the time set forth in the exemption) and install the missing inflatable restraint at no charge.

(e) If the reader has any questions or would like some further information, he or she may contact the manufacturer at (insert an address and telephone number).

S13 *Alternative unbelted test available, under S3(b) of this standard, for certain vehicles manufactured before September 1, 2006.*

S13.1 *Instrumentation for Impact Test—Part 1—Electronic Instrumentation.* Under the applicable conditions of S8, mount the vehicle on a dynamic test platform at the vehicle attitude set forth in S13.3, so that the longitudinal center line of the vehicle is parallel to the direction of the test platform travel and so that movement between the base of the vehicle and the test platform is prevented. The test platform is instrumented with an accelerometer and data processing system having a frequency response of 60 channel class as specified in SAE J211/1 rev. Mar 95 (see S4.7). The accelerometer sensitive axis is parallel to the direction of test platform travel. The test is conducted at a velocity change approximating 48 km/h (30 mph) with acceleration of the test platform such that all points on the crash pulse curve within the corridor identified in Figure 6 are covered. An inflatable restraint is to be activated at 20 ms +/−2 ms from the time that 0.5 g is measured on the dynamic test platform. The test dummy specified in S8.1.8, placed in each front outboard designated seating position as specified in S10, excluding S10.7, S10.8, and S10.9, shall meet the injury criteria of S6.1, S6.2(a), S6.3, S6.4(a), S6.5, and S13.2 of this standard.

S13.2 *Neck injury criteria.* A vehicle certified to this alternative test requirement shall, in addition to meeting the criteria specified in S13.1, meet the following injury criteria for the neck, measured with the six axis load cell (ref. Denton drawing C–1709) that is mounted between the bottom of the skull and the top of the neck as shown in Drawing 78051–218, in the unbelted sled test:

(a) Flexion Bending Moment (calculated at the occipital condyle)—190 Nm. SAE Class 600.

(b) Extension Bending Moment (calculated at the occipital condyle)—57 Nm. SAE Class 600.

(c) Axial Tension—3300 peak N. SAE Class 1000.

(d) Axial Compression—4000 peak N. SAE Class 1000.

(e) Fore-and-Aft Shear—3100 peak N. SAE Class 1000.

S13.3 *Vehicle test attitude.* When the vehicle is in its ''as delivered'' condition, measure the angle between the driver's door sill and the horizontal. Mark where the angle is taken on the door sill. The ''as delivered'' condition is the vehicle as received at the test

site, with 100 percent of all fluid capacities and all tires inflated to the manufacturer's specifications as listed on the vehicle's tire placard. When the vehicle is in its ''fully loaded'' condition, measure the angle between the driver's door sill and the horizontal, at the same place the ''as delivered'' angle was measured. The ''fully loaded'' condition is the test vehicle loaded in accordance with S8.1.1(a) or (b) of Standard No. 208, as applicable. The load placed in the cargo area shall be centered over the longitudinal centerline of the vehicle. The pretest door sill angle, when the vehicle is on the sled, (measured at the same location as the as delivered and fully loaded condition) shall be equal to or between the as delivered and fully loaded door sill angle measurements.

S13.4 *Tires and wheels*. Remove the tires and wheels.

S13.5. *Vehicle Securing*. The engine, transmissions, axles, exhaust, vehicle frame, and vehicle body may be rigidly secured to the vehicle and/or the sled, and fluids, batteries and unsecured components may be removed, in order to assure that all points on the crash pulse curve are within the corridor defined in Figure 6.

S14 *Advanced air bag requirements for passenger cars and for trucks, buses, and multipurpose passenger vehicles with a GVWR of 3,855 kg (8500 pounds) or less and an unloaded vehicle weight of 2,495 kg (5500 pounds) or less, except for walk-in van-type trucks or vehicles designed to be sold exclusively to the U.S. Postal Service*.

S14.1 *Vehicles manufactured on or after September 1, 2003, and before September 1, 2006*. (a) For vehicles manufactured for sale in the United States on or after September 1, 2003, and before September 1, 2006, a percentage of the manufacturer's production, as specified in S14.1.1, shall meet the requirements specified in S14.5.1(a), S14.5.2, S15.1, S15.2, S17, S19, S21, S23, and S25 (in addition to the other requirements specified in this standard).

(b) Manufacturers that sell two or fewer carlines, as that term is defined at 49 CFR 583.4, in the United States may, at the option of the manufacturer, meet the requirements of this paragraph instead of paragraph (a) of this section. Each vehicle manufactured on or after September 1, 2004, and before September 1, 2006, shall meet the requirements specified in S14.5.1(a), S14.5.2, S15.1, S15.2, S17, S19, S21, S23, and S25 (in addition to the other requirements specified in this standard).

(c) Vehicles that are manufactured in two or more stages or that are altered (within the meaning of 49 CFR 567.7) after having previously been certified in accordance with Part 567 of this chapter are not subject to the requirements of S14.1.

(d) Vehicles that are manufactured by an original vehicle manufacturer that produces or assembles fewer than 5,000 vehicles annually for sale in the United States are not subject to the requirements of S14.1.

S14.1.1 *Phase-in schedule*.

S14.1.1.1 *Vehicles manufactured on or after September 1, 2003, and before September 1, 2004*. Subject to S14.1.2(a), for vehicles manufactured by a manufacturer on or after September 1, 2003, and before September 1, 2004, the amount of vehicles complying with S14.5.1(a), S14.5.2, S15.1, S15.2, S17, S19, S21, S23, and S25, shall be not less than 35 percent of:

(a) If the manufacturer has manufactured vehicles for sale in the United States during both of the two production years prior to September 1, 2003, the manufacturer's average annual production of vehicles manufactured on or after September 1, 2001, and before September 1, 2004, or

(b) The manufacturer's production on or after September 1, 2003, and before September 1, 2004.

S14.1.1.2 *Vehicles manufactured on or after September 1, 2004, and before September 1, 2005*. Subject to S14.1.2(b), for vehicles manufactured by a manufacturer on or after September 1, 2004, and before September 1, 2005, the amount of vehicles complying with S14.5.1(a), S14.5.2, S15.1, S15.2, S17, S19, S21, S23, and S25 shall be not less than 65 percent of:

(a) If the manufacturer has manufactured vehicles for sale in the United States during both of the two production years prior to September 1, 2004, the manufacturer's average annual production of vehicles manufactured on or

after September 1, 2002, and before September 1, 2005, or

(b) The manufacturer's production on or after September 1, 2004, and before September 1, 2005.

S14.1.1.3 *Vehicles manufactured on or after September 1, 2005, and before September 1, 2006.* Subject to S14.1.2(c), for vehicles manufactured by a manufacturer on or after September 1, 2005, and before September 1, 2006, the amount of vehicles complying with S14.5.1(a), S14.5.2, S15.1, S15.2, S17, S19, S21, S23, and S25 shall be 100 percent of the manufacturer's production during that period.

S14.1.2 Calculation of complying vehicles.

(a) For the purposes of complying with S14.1.1.1, a manufacturer may count a vehicle if it is manufactured on or after June 12, 2000, but before September 1, 2004.

(b) For purposes of complying with S14.1.1.2, a manufacturer may count a vehicle if it:

(1) Is manufactured on or after June 12, 2000, but before September 1, 2005, and

(2) Is not counted toward compliance with S14.1.1.1.

(c) For purposes of complying with S14.1.1.3, a manufacturer may count a vehicle if it:

(1) Is manufactured on or after June 12, 2000, but before September 1, 2006, and (2) Is not counted toward compliance with S14.1.1.1 or S14.1.1.2.

S14.1.3 *Vehicles produced by more than one manufacturer.*

S14.1.3.1 For the purpose of calculating average annual production of vehicles for each manufacturer and the number of vehicles manufactured by each manufacturer under S14.1.1, a vehicle produced by more than one manufacturer shall be attributed to a single manufacturer as follows, subject to S14.1.3.2.

(a) A vehicle that is imported shall be attributed to the importer.

(b) A vehicle manufactured in the United States by more than one manufacturer, one of which also markets the vehicle, shall be attributed to the manufacturer that markets the vehicle.

S14.1.3.2 A vehicle produced by more than one manufacturer shall be attributed to any one of the vehicle's manufacturers specified by an express written contract, reported to the National Highway Traffic Safety Administration under 49 CFR Part 585, between the manufacturer so specified and the manufacturer to which the vehicle would otherwise be attributed under S14.1.3.1.

S14.2 *Vehicles manufactured on or after September 1, 2006.* Each vehicle shall meet the requirements specified in S14.5.1(a), S14.5.2, S15.1, S15.2, S17, S19, S21, S23, and S25 (in addition to the other requirements specified in this standard).

S14.3 *Vehicles manufactured on or after September 1, 2007, and before September 1, 2010.*

(a) For vehicles manufactured for sale in the United States on or before September 1, 2007, and before September 1, 2010, a percentage of the manufacturer's production, as specified in S14.3.1, shall meet the requirements specified in S14.5.1(b) (in addition to the other requirements of this standard).

(b) Manufacturers that sell two or fewer carlines, as that term is defined at 49 CFR 583.4, in the United States may, at the option of the manufacturer, meet the requirements of this paragraph instead of paragraph (a) of this section. Each vehicle manufactured on or after September 1, 2008, and before September 1, 2010, shall meet the requirements specified in S14.5.1(b) (in addition to the other requirements specified in this standard).

(c) Vehicles that are manufactured in two or more stages or that are altered (within the meaning of 49 CFR 567.7) after having been previously certified in accordance with Part 567 of this chapter are not subject to the requirements of S14.3.

(d) Vehicles that are manufactured by an original vehicle manufacturer that produces or assembles fewer than 5,000 vehicles annually for sale in the United States are not subject to the requirements of S14.3.

S14.3.1 *Phase-in schedule.*

S14.3.1.1 *Vehicles manufactured on or after September 1, 2007, and before September 1, 2008.* Subject to S14.3.2(a), for vehicles manufactured by a manufacturer on or after September 1, 2007, and before September 1, 2008, the amount of vehicles complying with S14.5.1(b),

S14.5.2, S15.1, S15.2, S17, S19, S21, S23, and S25, shall be not less than 35 percent of:

(a) If the manufacturer has manufactured vehicles for sale in the United States during both of the two production years prior to September 1, 2007, the manufacturer's average annual production of vehicles manufactured on or after September 1, 2005, and before September 1, 2008, or

(b) The manufacturer's production on or after September 1, 2007, and before September 1, 2008.

S14.3.1.2 *Vehicles manufactured on or after September 1, 2008, and before September 1, 2009.* Subject to S14.3.2(b), for vehicles manufactured by a manufacturer on or after September 1, 2008, and before September 1, 2009, the amount of vehicles complying with S14.5.1(b), S14.5.2, S15.1, S15.2, S17, S19, S21, S23, and S25 shall be not less than 65 percent of:

(a) If the manufacturer has manufactured vehicles for sale in the United States during both of the two production years prior to September 1, 2008, the manufacturer's average annual production of vehicles manufactured on or after September 1, 2006 and before September 1, 2009, or

(b) The manufacturer's production on or after September 1, 2008, and before September 1, 2009.

S14.3.1.3 *Vehicles manufactured on or after September 1, 2009, and before September 1, 2010.* Subject to S14.3.2(c), for vehicles manufactured by a manufacturer on or after September 1, 2009, and before September 1, 2010, the amount of vehicles complying with S14.5.1(b), S14.5.2, S15.1, S15.2, S17, S19, S21, S23, and S25 shall be 100 percent of the manufacturer's production during that period.

S14.3.2 *Calculation of complying vehicles.*

(a) For the purposes of complying with S14.3.1.1, a manufacturer may count a vehicle if it is manufactured on or after September 1, 2006, but before September 1, 2008.

(b) For purposes of complying with S14.3.1.2, a manufacturer may count a vehicle if it:

(1) Is manufactured on or after September 1, 2006, but before September 1, 2009, and

(2) Is not counted toward compliance with S14.3.1.1.

(c) For purposes of complying with S14.3.1.3, a manufacturer may count a vehicle if it:

(1) Is manufactured on or after September 1, 2006, but before September 1, 2010, and

(2) Is not counted toward compliance with S14.3.1.1 or S14.3.1.2.

S14.3.3 *Vehicles produced by more than one manufacturer.*

S14.3.3.1 For the purpose of calculating average annual production of vehicles for each manufacturer and the number of vehicles manufactured by each manufacturer under S14.3.1, a vehicle produced by more than one manufacturer shall be attributed to a single manufacturer as follows, subject to S14.3.3.2.

(a) A vehicle that is imported shall be attributed to the importer.

(b) A vehicle manufactured in the United States by more than one manufacturer, one of which also markets the vehicle, shall be attributed to the manufacturer that markets the vehicle.

S14.3.3.2 A vehicle produced by more than one manufacturer shall be attributed to any one of the vehicle's manufacturers specified by an express written contract, reported to the National Highway Traffic Safety Administration under 49 CFR Part 585, between the manufacturer so specified and the manufacturer to which the vehicle would otherwise be attributed under S14.3.3.1.

S14.4 *Vehicles manufactured on or after September 1, 2010.* Each vehicle shall meet the requirements specified in S14.5.1(b), S14.5.2, S15.1, S15.2, S17, S19, S21, S23, and S25 (in addition to the other requirements specified in this standard).

S14.5 *Barrier test requirements using 50th percentile adult male dummies.*

S14.5.1 *Rigid barrier belted test.* (a) Each vehicle that is certified as complying with S14.1 or S14.2 shall, at each front outboard designated seating position, meet the injury criteria specified in S6.1, S6.2(b), S6.3, S6.4(b), S6.5, and S6.6 when tested under S5.1.1(b)(1).

(b) Each vehicle that is certified as complying with S14.3 or S14.4 shall, at each front outboard designated seating

position, meet the injury criteria specified in S6.1, S6.2(b), S6.3, S6.4(b), S6.5, and S6.6 when tested under S5.1.1(b)(2).

S14.5.2 *Rigid barrier unbelted test.* Each vehicle that is certified as complying with S14 shall, at each front outboard designated seating position, meet the injury criteria specified in S6.1, S6.2(b), S6.3, S6.4(b), S6.5, and S6.6 when tested under S5.1.2(b).

S15 *Rigid barrier test requirements using 5th percentile adult female dummies.*

S15.1 *Belted test.* Each vehicle that is certified as complying with S14 shall, at each front outboard designated seating position, meet the injury criteria specified in S15.3 of this standard when the vehicle is crash tested in accordance with the procedures specified in S16.1(a) of this standard with the anthropomorphic test devices restrained by a Type 2 seat belt assembly.

S15.2 *Unbelted test.* Each vehicle that is certified as complying with S14 shall, at each front outboard designated seating position, meet the injury criteria specified in S15.3 of this standard when the vehicle is crash tested in accordance with the procedures specified in S16.1(b) of this standard with the anthropomorphic test devices unbelted.

S15.3 *Injury criteria for the 49 CFR Part 572, Subpart O Hybrid III 5th percentile female test dummy.*

S15.3.1 All portions of the test dummy shall be contained within the outer surfaces of the vehicle passenger compartment.

S15.3.2 *Head injury criteria.* (a) For any two points in time, t_1 and t_2, during the event which are separated by not more than a 15 millisecond time interval and where t_1 is less than t_2, the head injury criterion (HIC_{15}) shall be determined using the resultant head acceleration at the center of gravity of the dummy head, a_r, expressed as a multiple of g (the acceleration of gravity) and shall be calculated using the expression:

$$\left[\frac{1}{(t_2 - t_1)}\int_{t_1}^{t_2} a_r \, dt\right]^{2.5} (t_2 - t_1)$$

(b) The maximum calculated HIC_{15} value shall not exceed 700.

S15.3.3 The resultant acceleration calculated from the output of the thoracic instrumentation shall not exceed 60 g's, except for intervals whose cumulative duration is not more than 3 milliseconds.

S15.3.4 Compression deflection of the sternum relative to the spine, as determined by instrumentation, shown shall not exceed 52 mm (2.0 in).

S15.3.5 The force transmitted axially through each femur shall not exceed 6805 N (1530 lb).

S15.3.6 *Neck injury.* When measuring neck injury, each of the following injury criteria shall be met.

(a) *Nij.*

(1) The shear force (Fx), axial force (Fz), and bending moment (My) shall be measured by the dummy upper neck load cell for the duration of the crash event as specified in S4.11. Shear force, axial force, and bending moment shall be filtered for Nij purposes at SAE J211/1 rev. Mar 95 Channel Frequency Class 600 (see S4.7).

(2) During the event, the axial force (Fz) can be either in tension or compression while the occipital condyle bending moment (Mocy) can be in either flexion or extension. This results in four possible loading conditions for Nij: Tension-extension (Nte), tension-flexion (Ntf), compression-extension (Nce), or compression-flexion (Ncf).

(3) When calculating Nij using equation S15.3.6(a)(4), the critical values, Fzc and Myc, are:

(i) Fzc = 4287 N (964 lbf) when Fz is in tension

(ii) Fzc = 3880 N (872 lbf) when Fz is in compression

(iii) Myc = 155 Nm (114 lbf-ft) when a flexion moment exists at the occipital condyle

(iv) Myc = 67 Nm (49 lbf-ft) when an extension moment exists at the occipital condyle.

(4) At each point in time, only one of the four loading conditions occurs and the Nij value corresponding to that loading condition is computed and the three remaining loading modes shall be considered a value of zero. The expression for calculating each Nij loading condition is given by:

Nij = (Fz/Fzc) + (Mocy/Myc)

(5) None of the four Nij values shall exceed 1.0 at any time during the event.

(b) *Peak tension*. Tension force (Fz), measured at the upper neck load cell, shall not exceed 2620 N (589 lbf) at any time.

(c) *Peak compression*. Compression force (Fz), measured at the upper neck load cell, shall not exceed 2520 N (566 lbf) at any time.

S15.3.7 Unless otherwise indicated, instrumentation for data acquisition, data channel frequency class, and moment calculations are the same as given for the 49 CFR Part 572, Subpart O Hybrid III 5th percentile female test dummy.

S16. *Test procedures for rigid barrier test requirements using 5th percentile adult female dummies*.

S16.1 *General provisions*. Crash testing to determine compliance with the requirements of S15 of this standard is conducted as specified in the following paragraphs (a) and (b).

(a) *Belted test*. Place a 49 CFR Part 572 Subpart O 5th percentile adult female test dummy at each front outboard seating position of a vehicle, in accordance with the procedures specified in S16.3 of this standard. Impact the vehicle traveling longitudinally forward at any speed, up to and including 48 km/h (30 mph), into a fixed rigid barrier that is perpendicular within a tolerance of ± 5 degrees to the line of travel of the vehicle under the applicable conditions of S16.2 of this standard.

(b) *Unbelted test*. Place a 49 CFR Part 572 Subpart O 5th percentile adult female test dummy at each front outboard seating position of a vehicle, in accordance with the procedures specified in S16.3 of this standard, except S16.3.5. Impact the vehicle traveling longitudinally forward at any speed, from 32 km/h (20 mph) to 40 km/h (25 mph), inclusive, into a fixed rigid barrier that is perpendicular within a tolerance of ± 5 degrees to the line of travel of the vehicle under the applicable conditions of S16.2 of this standard.

S16.2 *Test conditions*.

S16.2.1 The vehicle, including test devices and instrumentation, is loaded as in S8.1.1.

S16.2.2 Movable vehicle windows and vents are placed in the fully closed position, unless the vehicle manufacturer chooses to specify a different adjustment position prior to the time the vehicle is certified.

S16.2.3 Convertibles and open-body type vehicles have the top, if any, in place in the closed passenger compartment configuration.

S16.2.4 Doors are fully closed and latched but not locked.

S16.2.5 The dummy is clothed in form fitting cotton stretch garments with short sleeves and above the knee length pants. A size 7 1/2W shoe which meets the configuration and size specifications of MIL–S–21711E (see S4.7) or its equivalent is placed on each foot of the test dummy.

S16.2.6 Limb joints are set at one g, barely restraining the weight of the limb when extended horizontally. Leg joints are adjusted with the torso in the supine position.

S16.2.7 Instrumentation shall not affect the motion of dummies during impact.

S16.2.8 The stabilized temperature of the dummy is at any level between 20.6 °C and 22.2 °C (69 °F to 72 °F).

S16.2.9 *Steering wheel adjustment*.

S16.2.9.1 Adjust a tiltable steering wheel, if possible, so that the steering wheel hub is at the geometric center of its full range of driving positions.

S16.2.9.2 If there is no setting detent at the mid-position, lower the steering wheel to the detent just below the mid-position.

S16.2.9.3 If the steering column is telescoping, place the steering column in the mid-position. If there is no mid-position, move the steering wheel rearward one position from the mid-position.

S16.2.10 *Driver and passenger seat set-up*.

S16.2.10.1 *Lumbar support adjustment*. Position adjustable lumbar supports so that the lumbar support is in its lowest, retracted or deflated adjustment position.

S16.2.10.2 *Other seat adjustments*. Position any adjustable parts of the seat that provide additional support so that they are in the lowest or most open adjustment position.

S16.2.10.3 *Seat position adjustment*. If the passenger seat does not adjust independently of the driver seat, the

driver seat shall control the final position of the passenger seat.

S16.2.10.3.1 If the seat is adjustable in the fore and aft and/or vertical directions, move the seat to the rearmost position at the full down height adjustment. If the seat cushion adjusts fore and aft, independent of the seat back, set this adjustment to the full rearward position. If the seat cushion contains a height adjustment, independent of the seat back, set this adjustment to the full down position. Record a seat cushion reference angle.

S16.2.10.3.2 Using only controls which move the seat fore and aft, move the seat to the full forward position. If seat adjustments other than fore-aft are present and the seat cushion reference angle changes from that measured in S16.2.10.3.1, use those adjustments to maintain as closely as possible the angle recorded in S16.2.10.3.1.

S16.2.10.3.3 If the seat height is adjustable, determine the maximum and minimum heights at this position, while maintaining, as closely as possible, the angle recorded in S16.2.10.3.1. Set the seat at the midpoint height with the seat cushion reference angle set as closely as possible to the angle recorded in S16.2.10.3.1. Mark location of the seat for future reference.

S16.3 *Dummy seating positioning procedures*. The 49 CFR Part 572 Subpart O 5th percentile adult female test dummy is positioned as follows:

S16.3.1 *General provisions and definitions*.

S16.3.1.1 All angles are measured with respect to the horizontal plane unless otherwise stated.

S16.3.1.2 The dummy's neck bracket is adjusted to align the zero degree index marks.

S16.3.1.3 The term ''midsagittal plane'' refers to the vertical plane that separates the dummy into equal left and right halves.

S16.3.1.4 The term ''vertical longitudinal plane'' refers to a vertical plane parallel to the vehicle's longitudinal centerline.

S16.3.1.5 The term ''vertical plane'' refers to a vertical plane, not necessarily parallel to the vehicle's longitudinal centerline.

S16.3.1.6 The term ''transverse instrumentation platform'' refers to the transverse instrumentation surface inside the dummy's skull casting to which the neck load cell mounts. This surface is perpendicular to the skull cap's machined inferior-superior mounting surface.

S16.3.1.7 The term ''thigh'' refers to the femur between, but not including, the knee and the pelvis.

S16.3.1.8 The term ''leg'' refers to the lower part of the entire leg including the knee.

S16.3.1.9 The term ''foot'' refers to the foot including the ankle.

S16.3.1.10 The longitudinal centerline of a bucket seat cushion is determined at the widest part of the seat cushion. Measure perpendicular to the longitudinal centerline of the vehicle.

S16.3.1.11 For leg and thigh angles use the following references:

S16.3.1.11.1 *Thigh*—a straight line on the thigh skin between the center of the ½–13 UNC–2B tapped hole in the upper leg femur clamp (see drawings 880105–504 (left thigh) and 880105–505 (right thigh), upper leg femur clamp) and the knee pivot shoulder bolt (part 880105–527 in drawing 880105–528R & 528L, sliding knee assy. w/o pot).

S16.3.1.11.2 *Leg*—a straight line on the leg skin between the center of the ankle shell (parts 880105–609 & 633 in drawing 880105–660, ankle assembly) and the knee pivot shoulder bolt (part 880105–527 in drawing 880105–528R & 528L, sliding knee assy. w/o pot).

S16.3.2 *Driver dummy positioning*.

S16.3.2.1 *Driver torso/head/seat back angle positioning*.

S16.3.2.1.1 With the seat in the position determined in S16.2.10, use only the controls which move the seat fore and aft to place the seat in the rearmost position, without adjusting independent height controls. If the seat cushion reference angle automatically changes as the seat is moved from the full forward position, maintain, as closely as possible, the seat cushion reference angle in S16.2.10.3.1, for the final forward position when measuring the pelvic angle as specified in S16.3.2.1.11.

S16.3.2.1.2 Fully recline the seat back, if adjustable. Install the dummy into the driver's seat, such that when the legs are positioned 120 degrees to

the thighs, the calves of the legs are not touching the seat cushion.

S16.3.2.1.3 *Bucket seats.* Center the dummy on the seat cushion so that its midsagittal plane is vertical and coincides with the vertical longitudinal plane through the center of the seat cushion.

S16.3.2.1.4 *Bench seats.* Position the midsagittal plane of the dummy vertical and parallel to the vehicle's longitudinal centerline and aligned with the center of the steering wheel rim.

S16.3.2.1.5 Hold the dummy's thighs down and push rearward on the upper torso to maximize the dummy's pelvic angle.

S16.3.2.1.6 Place the legs at 120 degrees to the thighs. Set the initial transverse distance between the longitudinal centerlines at the front of the dummy's knees at 160 to 170 mm (6.3 to 6.7 in), with the thighs and legs of the dummy in vertical planes. Push rearward on the dummy's knees to force the pelvis into the seat so there is no gap between the pelvis and the seat back or until contact occurs between the back of the dummy's calves and the front of the seat cushion.

S16.3.2.1.7 Gently rock the upper torso relative to the lower torso laterally in a side to side motion three times through a ±5 degree arc (approximately 51 mm (2 in) side to side) to reduce friction between the dummy and the seat.

S16.3.2.1.8 If needed, extend the legs slightly so that the feet are not in contact with the floor pan. Let the thighs rest on the seat cushion to the extent permitted by the foot movement. Keeping the leg and the thigh in a vertical plane, place the foot in the vertical longitudinal plane that passes through the centerline of the accelerator pedal. Rotate the left thigh outboard about the hip until the center of the knee is the same distance from the midsagittal plane of the dummy as the right knee ±5 mm (±0.2 in). Using only controls which move the seat fore and aft, attempt to return the seat to the full forward position. If either of the dummy's legs first contacts the steering wheel, then adjust the steering wheel, if adjustable, upward until contact with the steering wheel is avoided. If the steering wheel is not adjustable, separate the knees enough to avoid steering wheel contact. Proceed with moving the seat forward until either the leg contacts the vehicle interior or the seat reaches the full forward position. (The right foot may contact and depress the accelerator and/or change the angle of the foot with respect to the leg during seat movement.) If necessary to avoid contact with the vehicles brake or clutch pedal, rotate the test dummy's left foot about the leg. If there is still interference, rotate the left thigh outboard about the hip the minimum distance necessary to avoid pedal interference. If a dummy leg contacts the vehicle interior before the full forward position is attained, position the seat at the next detent where there is no contact. If the seat is a power seat, move the seat fore and aft to avoid contact while assuring that there is a maximum of 5 mm (0.2 in) distance between the vehicle interior and the point on the dummy that would first contact the vehicle interior. If the steering wheel was moved, return it to the position described in S16.2.9. If the steering wheel contacts the dummy's leg(s) prior to attaining this position, adjust it to the next higher detent, or if infinitely adjustable, until there is 5 mm (0.2 in) clearance between the wheel and the dummy's leg(s).

S16.3.2.1.9 For vehicles without adjustable seat backs, adjust the lower neck bracket to level the head as much as possible. For vehicles with adjustable seat backs, while holding the thighs in place, rotate the seat back forward until the transverse instrumentation platform of the head is level to within ±0.5 degree, making sure that the pelvis does not interfere with the seat bight. Inspect the abdomen to ensure that it is properly installed. If the torso contacts the steering wheel, adjust the steering wheel in the following order until there is no contact: telescoping adjustment, lowering adjustment, raising adjustment. If the vehicle has no adjustments or contact with the steering wheel cannot be eliminated by adjustment, position the seat at the next detent where there is no contact with the steering wheel as adjusted in S16.2.9. If the seat is a power seat, position the seat to avoid contact

while assuring that there is a maximum of 5 mm (0.2 in) distance between the steering wheel as adjusted in S16.2.9 and the point of contact on the dummy.

S16.3.2.1.10 If it is not possible to achieve the head level within ±0.5 degrees, minimize the angle.

S16.3.2.1.11 Measure and set the dummy's pelvic angle using the pelvic angle gage (drawing TE–2504, incorporated by reference in 49 CFR Part 572, Subpart O, of this chapter). The angle shall be set to 20.0 degrees ±2.5 degrees. If this is not possible, adjust the pelvic angle as close to 20.0 degrees as possible while keeping the transverse instrumentation platform of the head as level as possible by adjustments specified in S16.3.2.1.9 and S16.3.2.1.10.

S16.3.2.1.12 If the dummy is contacting the vehicle interior after these adjustments, move the seat rearward until there is a maximum of 5 mm (0.2 in) between the contact point of the dummy and the interior of the vehicle or if it has a manual seat adjustment, to the next rearward detent position. If after these adjustments, the dummy contact point is more than 5 mm (0.2 in) from the vehicle interior and the seat is still not in its forwardmost position, move the seat forward until the contact point is 5 mm (0.2 in) or less from the vehicle interior, or if it has a manual seat adjustment, move the seat to the closest detent position without making contact, or until the seat reaches its forwardmost position, whichever occurs first.

S16.3.2.2 *Driver foot positioning.*

S16.3.2.2.1 If the vehicle has an adjustable accelerator pedal, adjust it to the full forward position. Rest the right foot of the test dummy on the undepressed accelerator pedal with the rearmost point of the heel on the floor pan in the plane of the pedal. If the foot cannot be placed on the accelerator pedal, set it initially perpendicular to the leg and then place it as far forward as possible in the direction of the pedal centerline with the rearmost point of the heel resting on the floor pan. If the vehicle has an adjustable accelerator pedal and the right foot is not touching the accelerator pedal when positioned as above, move the pedal rearward until it touches the right foot. If the accelerator pedal in the full rearward position still does not touch the foot, leave the pedal in that position.

S16.3.2.2.2 If the ball of the foot does not contact the pedal, change the angle of the foot relative to the leg such that the toe of the foot contacts the undepressed accelerator pedal.

S16.3.2.2.3 Place the left foot on the toe-board with the rearmost point of the heel resting on the floor pan as close as possible to the point of intersection of the planes described by the toe-board and floor pan, and not on the wheel-well projection or foot rest.

S16.3.2.2.4 If the left foot cannot be positioned on the toe board, place the foot perpendicular to the lower leg centerline as far forward as possible with the heel resting on the floor pan.

S16.3.2.2.5 If necessary to avoid contact with the vehicle's brake or clutch pedal, rotate the test dummy's left foot about the lower leg. If there is still pedal interference, rotate the left leg outboard about the hip the minimum distance necessary to avoid the pedal interference. If the left foot does not contact the floor pan, place the foot parallel to the floor and place the leg as perpendicular to the thigh as possible.

S16.3.2.3 *Driver arm/hand positioning.*

S16.3.2.3.1 Place the dummy's upper arms adjacent to the torso with the arm centerlines as close to a vertical longitudinal plane as possible.

S16.3.2.3.2 Place the palms of the dummy in contact with the outer part of the steering wheel rim at its horizontal centerline with the thumbs over the steering wheel rim.

S16.3.2.3.3 If it is not possible to position the thumbs inside the steering wheel rim at its horizontal centerline, then position them above and as close to the horizontal centerline of the steering wheel rim as possible.

S16.3.2.3.4 Lightly tape the hands to the steering wheel rim so that if the hand of the test dummy is pushed upward by a force of not less than 9 N (2 lb) and not more than 22 N (5 lb), the tape releases the hand from the steering wheel rim.

S16.3.3 *Passenger dummy positioning.*

S16.3.3.1 *Passenger torso/head/seat back angle positioning.*

S16.3.3.1.1 With the seat in the position determined in S16.2.10, use only the controls which move the seat fore and aft to place the seat in the rearmost position, without adjusting independent height controls. If the seat cushion reference angle automatically changes as the seat is moved from the full forward position, maintain as closely as possible the seat cushion reference angle in S16.2.10.3.1, for the final forward position when measuring the pelvic angle as specified in S16.3.3.1.11.

S16.3.3.1.2 Fully recline the seat back, if adjustable. Install the dummy into the passenger's seat, such that when the legs are 120 degrees to the thighs, the calves of the legs are not touching the seat cushion.

S16.3.3.1.3 *Bucket seats.* Center the dummy on the seat cushion so that its midsagittal plane is vertical and coincides with the vertical longitudinal plane through the center of the seat cushion.

S16.3.3.1.4 *Bench seats.* Position the midsagittal plane of the dummy vertical and parallel to the vehicle's longitudinal centerline and the same distance from the vehicle's longitudinal centerline as the midsagittal plane of the driver dummy.

S16.3.3.1.5 Hold the dummy's thighs down and push rearward on the upper torso to maximize the dummy's pelvic angle.

S16.3.3.1.6 Place the legs at 120 degrees to the thighs. Set the initial transverse distance between the longitudinal centerlines at the front of the dummy's knees at 160 to 170 mm (6.3 to 6.7 in), with the thighs and legs of the dummy in vertical planes. Push rearward on the dummy's knees to force the pelvis into the seat so there is no gap between the pelvis and the seat back or until contact occurs between the back of the dummy's calves and the front of the seat cushion.

S16.3.3.1.7 Gently rock the upper torso relative to the lower torso laterally side to side three times through a ±5 degree arc (approximately 51 mm (2 in) side to side).

S16.3.3.1.8 If needed, extend the legs slightly so that the feet are not in contact with the floor pan. Let the thighs rest on the seat cushion to the extent permitted by the foot movement. With the feet perpendicular to the legs, place the heels on the floor pan. If a heel will not contact the floor pan, place it as close to the floor pan as possible. Using only controls which move the seat fore and aft, attempt to return the seat to the full forward position. If a dummy leg contacts the vehicle interior before the full forward position is attained, position the seat at the next detent where there is no contact. If the seats are power seats, position the seat to avoid contact while assuring that there is a maximum of 5 mm (0.2 in) distance between the vehicle interior and the point on the dummy that would first contact the vehicle interior.

S16.3.3.1.9 For vehicles without adjustable seat backs, adjust the lower neck bracket to level the head as much as possible. For vehicles with adjustable seat backs, while holding the thighs in place, rotate the seat back forward until the transverse instrumentation platform of the head is level to within ±0.5 degrees, making sure that the pelvis does not interfere with the seat bight. Inspect the abdomen to insure that it is properly installed.

S16.3.3.1.10 If it is not possible to orient the head level within ±0.5 degrees, minimize the angle.

S16.3.3.1.11 Measure and set the dummy's pelvic angle using the pelvic angle gage (drawing TE–2504, incorporated by reference in 49 CFR Part 572, Subpart O, of this chapter). The angle shall be set to 20.0 degrees ±2.5 degrees. If this is not possible, adjust the pelvic angle as close to 20.0 degrees as possible while keeping the transverse instrumentation platform of the head as level as possible as specified in S16.3.3.1.9 and S16.3.3.1.10.

S16.3.3.1.12 If the dummy is contacting the vehicle interior after these adjustments, move the seat rearward until there is a maximum of 5 mm (0.2 in) between the contact point of the dummy and the interior of the vehicle or if it has a manual seat adjustment, to the next rearward detent position. If after these adjustments the dummy contact point is more than 5 mm (0.2 in) from the vehicle interior and the

seat is still not in its forward most position, move the seat forward until the contact point is 5 mm (0.2 in) or less from the vehicle interior, or if it has a manual seat adjustment, move the seat to the closest detent position without making contact, or until the seat reaches its forward most position, whichever occurs first.

S16.3.3.2 *Passenger foot positioning.*

S16.3.3.2.1 Place the passenger's feet flat on the toe board.

S16.3.3.2.2 If the feet cannot be placed flat on the toe board, set them perpendicular to the leg center lines and place them as far forward as possible with the heels resting on the floor pan.

S16.3.3.3 *Passenger arm/hand positioning.*

S16.3.3.3.1 Place the dummy's upper arms in contact with the seat back and the torso.

S16.3.3.3.2 Place the palms of the dummy in contact with the outside of the thighs.

S16.3.3.3.3 Place the little fingers in contact with the seat cushion.

S16.3.4 *Driver and passenger adjustable head restraints.*

S16.3.4.1 If the head restraint has an automatic adjustment, leave it where the system positions the restraint after the dummy is placed in the seat.

S16.3.4.2 Adjust each head restraint to its lowest position.

S16.3.4.3 Measure the vertical distance from the top most point of the head restraint to the bottom most point. Locate a horizontal plane through the midpoint of this distance. Adjust each head restraint vertically so that this horizontal plane is aligned with the center of gravity (CG) of the dummy head.

S16.3.4.3 If the above position is not attainable, move the vertical center of the head restraint to the closest detent below the center of the head CG.

S16.3.4.4 If the head restraint has a fore and aft adjustment, place the restraint in the forwardmost position or until contact with the head is made, whichever occurs first.

S16.3.5 *Driver and passenger manual belt adjustment (for tests conducted with a belted dummy)*

S16.3.5.1 If an adjustable seat belt D-ring anchorage exists, place it in the manufacturer's design position for a 5th percentile adult female with the seat in the position specified in S16.2.10.3.

S16.3.5.2 Place the Type 2 manual belt around the test dummy and fasten the latch.

S16.3.5.3 Ensure that the dummy's head remains as level as possible, as specified in S16.3.2.1.9 and S16.3.2.1.10 and S16.3.3.1.9 and S16.3.3.1.10.

S16.3.5.4 Remove all slack from the lap belt. Pull the upper torso webbing out of the retractor and allow it to retract; repeat this operation four times. Apply a 9 N (2 lbf) to 18 N (4 lbf) tension load to the lap belt. If the belt system is equipped with a tension-relieving device, introduce the maximum amount of slack into the upper torso belt that is recommended by the manufacturer. If the belt system is not equipped with a tension-relieving device, allow the excess webbing in the shoulder belt to be retracted by the retractive force of the retractor.

S17 *Offset frontal deformable barrier requirements using 5th percentile adult female test dummies.* Each vehicle that is certified as complying with S14 shall, at each front outboard designated seating position, meet the injury criteria specified in S15.3 of this standard when the vehicle is crash tested in accordance with the procedures specified in S18 of this standard with the anthropomorphic test devices restrained by a Type 2 seat belt assembly.

S18 *Test procedure for offset frontal deformable barrier requirements using 5th percentile adult female dummies.*

S18.1 *General provisions.* Place a 49 CFR Part 572 Subpart O 5th percentile adult female test dummy at each front outboard seating position of a vehicle, in accordance with the procedures specified in S16.3 of this standard. Impact the vehicle traveling longitudinally forward at any speed, up to and including 40 km/h (25 mph), into a fixed offset deformable barrier under the conditions and procedures specified in S18.2 of this standard, impacting only the left side of the vehicle.

S18.2 *Test conditions.*

S18.2.1 *Offset frontal deformable barrier.* The offset frontal deformable barrier shall conform to the specifications

set forth in Subpart C of Part 587 of this chapter.

S18.2.2 *General test conditions.* All of the test conditions specified in S16.2 of this standard apply.

S18.2.3 *Dummy seating procedures.* Position the anthropomorphic test dummies as specified in S16.3 of this standard.

S18.2.4 *Impact configuration.* The test vehicle shall impact the barrier with the longitudinal centerline of the vehicle parallel to the line of travel and perpendicular to the barrier face within a tolerance of ± 5 degrees. The test vehicle shall be aligned so that the vehicle strikes the barrier with 40 percent overlap on the left side of the vehicle, with the vehicle's front engaging the barrier face such that the vehicle's longitudinal centerline is offset outboard of the edge of the barrier face by 10 percent of the vehicle's width ± 50 mm (2.0 in) as illustrated in Figure 10. The vehicle width is defined as the maximum dimension measured across the widest part of the vehicle, including bumpers and molding but excluding such components as exterior mirrors, flexible mud flaps, marker lamps, and dual rear wheel configurations.

S19 *Requirements to provide protection for infants in rear facing and convertible child restraints and car beds.*

S19.1 Each vehicle certified as complying with S14 shall, at the option of the manufacturer, meet the requirements specified in S19.2 or S19.3, under the test procedures specified in S20.

S19.2 *Option 1—Automatic suppression feature.* Each vehicle shall meet the requirements specified in S19.2.1 through S19.2.3.

S19.2.1 The vehicle shall be equipped with an automatic suppression feature for the passenger air bag which results in deactivation of the air bag during each of the static tests specified in S20.2 (using the 49 CFR Part 572 Subpart R 12-month-old CRABI child dummy in any of the child restraints identified in sections B and C of appendix A of this standard and the 49 CFR part 572 subpart K Newborn Infant dummy in any of the car beds identified in section A of appendix A, as appropriate), and activation of the air bag system during each of the static tests specified in S20.3 (using the 49 CFR Part 572 Subpart O 5th percentile adult female dummy).

S19.2.2 The vehicle shall be equipped with at least one telltale which emits light whenever the passenger air bag system is deactivated and does not emit light whenever the passenger air bag system is activated, except that the telltale(s) need not illuminate when the passenger seat is unoccupied. Each telltale:

(a) Shall emit yellow light;

(b) Shall have the identifying words ''PASSENGER AIR BAG OFF'' or ''PASS AIR BAG OFF'' on the telltale or within 25 mm (1.0 in) of the telltale; and

(c) Shall not be combined with the readiness indicator required by S4.5.2 of this standard.

(d) Shall be located within the interior of the vehicle and forward of and above the design H-point of both the driver's and the right front passenger's seat in their forwardmost seating positions and shall not be located on or adjacent to a surface that can be used for temporary or permanent storage where use of the storage space could obscure the telltale from either the driver's or right front passenger's view, or where the telltale would be obscured from the driver's view if a rear facing child restraint is installed in the right front passenger's seat.

(e) Shall be visible and recognizable to a driver and right front passenger during night and day when the occupants have adapted to the ambient light roadway conditions.

(f) Telltales need not be visible or recognizable when not activated.

(g) Means shall be provided for making telltales and their identification visible and recognizable to the driver and right front passenger under all driving conditions. The means for providing the required visibility may be adjustable manually or automatically, except that the telltales and their identifications may not be adjustable under any driving conditions to a level that they become invisible or not recognizable to the driver and right front passenger.

(h) The telltale must not emit light except when the passenger air bag is urned off or during a bulb check upon vehicle starting.

S19.2.3 The vehicle shall be equipped with a mechanism that indicates whether the air bag system is suppressed, regardless of whether the passenger seat is occupied. The mechanism need not be located in the occupant compartment unless it is the telltale described in S19.2.2.

S19.3 *Option 2—Low risk deployment.* Each vehicle shall meet the injury criteria specified in S19.4 of this standard when the passenger air bag is deployed in accordance with the procedures specified in S20.4.

S19.4 *Injury criteria for the 49 CFR Part 572, Subpart R 12-month-old CRABI test dummy.*

S19.4.1 All portions of the test dummy and child restraint shall be contained within the outer surfaces of the vehicle passenger compartment.

S19.4.2 Head injury criteria.

(a) For any two points in time, t_1 and t_2, during the event which are separated by not more than a 15 millisecond time interval and where t_1 is less than t_2, the head injury criterion (HIC_{15}) shall be determined using the resultant head acceleration at the center of gravity of the dummy head, a_r, expressed as a multiple of g (the acceleration of gravity) and shall be calculated using the expression:

$$\left[\frac{1}{(t_2 t_1)}\int_{t_1}^{t_2} a_r dt\right]^{2.5} (t_2 t_1)$$

(b) The maximum calculated HIC_{15} value shall not exceed 390.

S19.4.3 The resultant acceleration calculated from the output of the thoracic instrumentation shall not exceed 50 g's, except for intervals whose cumulative duration is not more than 3 milliseconds.

S19.4.4 *Neck injury.* When measuring neck injury, each of the following injury criteria shall be met.

(a) *Nij.*

(1) The shear force (Fx), axial force (Fz), and bending moment (My) shall be measured by the dummy upper neck load cell for the duration of the crash event as specified in S4.11. Shear force, axial force, and bending moment shall be filtered for Nij purposes at SAE J211/1 rev. Mar95 Channel Frequency Class 600 (see S4.7).

(2) During the event, the axial force (Fz) can be either in tension or compression while the occipital condyle bending moment (Mocy) can be in either flexion or extension. This results in four possible loading conditions for Nij: tension-extension (Nte), tension-flexion (Ntf), compression-extension (Nce), or compression-flexion (Ncf).

(3) When calculating Nij using equation S19.4.4(a)(4), the critical values, Fzc and Myc, are:

(i) Fzc = 1460 N (328 lbf) when Fz is in tension

(ii) Fzc = 1460 N (328 lbf) when Fz is in compression

(iii) Myc = 43 Nm (32 lbf-ft) when a flexion moment exists at the occipital condyle

(iv) Myc = 17 Nm (13 lbf-ft) when an extension moment exists at the occipital condyle.

(4) At each point in time, only one of the four loading conditions occurs and the Nij value corresponding to that loading condition is computed and the three remaining loading modes shall be considered a value of zero. The expression for calculating each Nij loading condition is given by:

Nij ' (Fz / Fzc) + (Mocy / Myc)

(5) None of the four Nij values shall exceed 1.0 at any time during the event.

(b) *Peak tension.* Tension force (Fz), measured at the upper neck load cell, shall not exceed 780 N (175 lbf) at any time.

(c) *Peak compression.* Compression force (Fz), measured at the upper neck load cell, shall not exceed 960 N (216 lbf) at any time.

S19.4.5 Unless otherwise indicated, instrumentation for data acquisition, data channel frequency class, and moment calculations are the same as given for the 49 CFR Part 572 Subpart R 12-month-old CRABI test dummy.

S20 *Test procedure for S19.*

S20.1 *General provisions.*

S20.1.1 Tests specifying the use of a car bed, a rear facing child restraint, or a convertible child restraint may be conducted using any such restraint listed in sections A, B, and C of Appendix A of this standard respectively. The car bed, rear facing child restraint, or

convertible child restraint may be unused or have been previously used only for automatic suppression tests. If it has been used, there shall not be any visible damage prior to the test.

S20.1.2 Each vehicle certified to this option shall comply in tests conducted with the right front outboard seating position, if adjustable fore and aft, at full rearward, middle, and full forward positions. If the child restraint or dummy contacts the vehicle interior, move the seat rearward to the next detent that provides clearance. If the seat is a power seat, move the seat rearward while assuring that there is a maximum of 5 mm (0.2 in) clearance.

S20.1.3 If the car bed, rear facing child restraint, or convertible child restraint is equipped with a handle, the vehicle shall comply in tests conducted with the handle at both the child restraint manufacturer's recommended position for use in vehicles and in the upright position.

S20.1.4 If the car bed, rear facing child restraint, or convertible child restraint is equipped with a sunshield, the vehicle shall comply in tests conducted with the sunshield both fully open and fully closed.

S20.1.5 The vehicle shall comply in tests with the car bed, rear facing child restraint, or convertible child restraint uncovered and in tests with a towel or blanket weighing up to 1.0 kg (2.2 lb) placed on or over the restraint in any of the following positions:

(a) with the blanket covering the top and sides of the restraint, and

(b) with the blanket placed from the top of the vehicle's seat back to the forwardmost edge of the restraint.

S20.1.6 Except as otherwise specified, if the car bed, rear facing child restraint, or convertible child restraint has an anchorage system as specified in S5.9 of FMVSS No. 213 and is tested in a vehicle with a right front outboard vehicle seat that has an anchorage system as specified in FMVSS No. 225, the vehicle shall comply with the belted test conditions with the restraint anchorage system attached to the vehicle seat anchorage system and the vehicle seat belt unattached. It shall also comply with the belted test conditions with the restraint anchorage system unattached to the vehicle seat anchorage system and the vehicle seat belt attached. The vehicle shall comply with the unbelted test conditions with the restraint anchorage system unattached to the vehicle seat anchorage system.

S20.1.7 If the car bed, rear facing child restraint, or convertible child restraint comes equipped with a detachable base, the vehicle shall comply in tests conducted with the detachable base attached to the child restraint and with the detachable base unattached to the child restraint.

S20.1.8 Do not attach any tethers.

S20.1.9 *Seat set-up.* Unless otherwise stated,

S20.1.9.1 *Lumbar support adjustment.* Position adjustable lumbar supports so that the lumbar support is in its lowest, retracted or deflated adjustment position.

S20.1.9.2 *Other seat adjustments.* Position any adjustable parts of the seat that provide additional support so that they are in the lowest or most open adjustment position.

S20.1.9.3 If the seat cushion adjusts fore and aft, independent of the seat back, set this adjustment to the full rearward position.

S20.1.9.4 If the seat height is adjustable, determine the maximum and minimum heights at the full rearward, middle, and full forward positions. Set the seat at the mid-point height for each of the three fore-aft test positions.

S20.1.9.5 The seat back angle, if adjustable, is set at the manufacturer's nominal design seat back angle for a 50th percentile adult male as specified in S8.1.3.

S20.1.9.6 If adjustable, set the head restraint at the full down and full forward position.

S20.1.10 The longitudinal centerline of a bucket seat cushion is determined at the widest part of the seat cushion. Measure perpendicular to the longitudinal centerline of the vehicle.

S20.2 *Static tests of automatic suppression feature which shall result in deactivation of the passenger air bag.* Each vehicle that is certified as complying with S19.2 shall meet the following test requirements.

S20.2.1 *Belted rear facing and convertible child restraints.*

S20.2.1.1 The vehicle shall comply in tests using any child restraint specified in section B and section C of Appendix A of this standard.

S20.2.1.2 Locate a vertical plane through the longitudinal centerline of the child restraint. This will be referred to as ''Plane''.

S20.2.1.3 For bucket seats, ''Plane B'' refers to a vertical plane parallel to the vehicle longitudinal centerline through the longitudinal centerline of the right front outboard vehicle seat cushion. For bench seats, ''Plane B'' refers to a vertical plane through the right front outboard vehicle seat parallel to the vehicle longitudinal centerline the same distance from the longitudinal centerline of the vehicle as the center of the steering wheel.

S20.2.1.4 *Facing rear.*

(a) The vehicle shall comply in both of the following positions, if applicable:

(1) Without attaching the child restraint anchorage system as specified in S5.9 of FMVSS No. 213 to a vehicle seat anchorage system specified in FMVSS No. 225, align the child restraint system facing rearward such that Plane A is aligned with Plane B.

(2) If the child restraint is certified to S5.9 of FMVSS No. 213, and the vehicle seat has an anchorage system as specified in FMVSS No. 225, attach the child restraint to the vehicle seat anchorage instead of aligning the planes. Do not attach the vehicle safety belt.

(b) While maintaining the child restraint positions achieved in S20.2.1.4(a), secure the child restraint by following, to the extent possible, the child restraint manufacturer's directions regarding proper installation of the restraint in the rear facing mode.

(c) Place any adjustable seat belt anchorages at the vehicle manufacturer's nominal design position for a 50th percentile adult male occupant. Cinch the vehicle belts to any tension from zero up to 134 N (30 lb) to secure the child restraint. Measure belt tension in a flat, straight section of the lap belt between the child restraint belt path and the contact point with the belt anchor or vehicle seat, on the side away from the buckle (to avoid interference from the shoulder portion of the belt).

(d) Position the 49 CFR Part 572 Subpart R 12-month-old CRABI dummy in the child restraint by following, to the extent possible, the manufacturer's instructions provided with the child restraint for seating infants.

(e) Start the vehicle engine or place the ignition in the ''on'' position, whichever will turn on the suppression system, and close all vehicle doors. Wait 10 seconds, then check whether the air bag is deactivated.

S20.2.1.5 *Facing forward (convertible restraints only).*

(a) The vehicle shall comply in both of the following positions, if applicable:

(1) Without attaching the child restraint anchorage system as specified in S5.9 of FMVSS No. 213 to a vehicle seat anchorage system specified in FMVSS No. 225, align the child restraint system facing forward such that Plane A is aligned with Plane B.

(2) If the child restraint is certified to S5.9 of FMVSS No. 213, and the vehicle seat has an anchorage system as specified in FMVSS No. 225, attach the child restraint to the vehicle seat anchorage instead of aligning the planes. Do not attach the vehicle safety belt.

(b) While maintaining the child restraint positions achieved in S20.2.1.5(a), secure the child restraint by following, to the extent possible, the child restraint manufacturer's directions regarding proper installation of the restraint in the forward facing mode.

(c) Place any adjustable seat belt anchorages at the vehicle manufacturer's nominal design position for a 50th percentile adult male occupant. Cinch the vehicle belts to any tension from zero up to 134 N (30 lb) to secure the child restraint. Measure belt tension in a flat, straight section of the lap belt between the child restraint belt path and the contact point with the belt anchor or vehicle seat, on the side away from the buckle (to avoid interference from the shoulder portion of the belt).

(d) Position the 49 CFR Part 572 Subpart R 12-month-old CRABI dummy in the child restraint by following, to the extent possible, the manufacturer's instructions provided with the child restraint for seating infants.

(e) Start the vehicle engine or place the ignition in the ''on'' position,

whichever will turn on the suppression system, and close all vehicle doors. Wait 10 seconds, then check whether the air bag is deactivated.

S20.2.2 *Unbelted rear facing and convertible child restraints.*

S20.2.2.1 The vehicle shall comply in tests using any child restraint specified in section B and section C of appendix A of this standard.

S20.2.2.2 Locate a vertical plane through the longitudinal centerline of the child restraint. This will be referred to as ''Plane A''.

S20.2.2.3 For bucket seats, ''Plane B'' refers to a vertical plane parallel to the vehicle longitudinal centerline through the longitudinal centerline of the right front outboard vehicle seat cushion. For bench seats, ''Plane B'' refers to a vertical plane through the right front outboard seat parallel to the vehicle longitudinal centerline the same distance from the longitudinal centerline of the vehicle as the center of the steering wheel.

S20.2.2.4 *Facing rear.*

(a) Align the child restraint system facing rearward such that Plane A is aligned with Plane B and the child restraint is in contact with the seat back.

(b) Position the 49 CFR Part 572 Subpart R 12-month-old CRABI dummy in the child restraint by following, to the extent possible, the manufacturer's instructions provided with the child restraint for seating infants.

(c) Start the vehicle engine or place the ignition in the ''on'' position, whichever will turn on the suppression system, and close all vehicle doors. Wait 10 seconds, then check whether the air bag is deactivated.

S20.2.2.5 *Facing forward.*

(a) Align the child restraint system facing forward such that Plane A is aligned with Plane B and the child restraint is in contact with the seat back.

(b) Position the 49 CFR Part 572 Subpart R 12-month-old CRABI dummy in the child restraint by following, to the extent possible, the manufacturer's instructions provided with the child restraint for seating infants.

(c) Start the vehicle engine or place the ignition in the ''on'' position, whichever will turn on the suppression system, and close all vehicle doors. Wait 10 seconds, then check whether the air bag is deactivated.

S20.2.3 *Tests with a belted car bed.*

S20.2.3.1 The vehicle shall comply in tests using any car bed specified in section A of Appendix A of this standard.

S20.2.3.2 (a) Install the car bed by following, to the extent possible, the car bed manufacturer's directions regarding proper installation of the car bed.

(b) Place any adjustable seat belt anchorages at the vehicle manufacturer's nominal design position for a 50th percentile adult male occupant. Cinch the vehicle belts to secure the car bed.

(c) Position the 49 CFR Part 572 Subpart K Newborn Infant dummy in the car bed by following, to the extent possible, the car bed manufacturer's instructions provided with the car bed for positioning infants.

(d) Start the vehicle engine or place the ignition in the ''on'' position, whichever will turn on the suppression system, and close all vehicle doors. Wait 10 seconds, then check whether the air bag is deactivated.

S20.3 *Static tests of automatic suppression feature which shall result in activation of the passenger air bag system.*

S20.3.1 Each vehicle certified to this option shall comply in tests conducted with the right front outboard seating position, if adjustable fore and aft, at the full rearward, middle, and, subject to S16.3.3.1.8, full forward positions. All tests are conducted with the seat height, if adjustable, in the mid-height position.

S20.3.2 Place a 49 CFR Part 572 Subpart O 5th percentile adult female test dummy at the right front outboard seating position of the vehicle, in accordance with procedures specified in S16.3.3 of this standard, except as specified in S20.3.1, subject to the fore-aft seat positions in S20.3.1. Do not fasten the seat belt.

S20.3.3 Start the vehicle engine or place the ignition in the ''on'' position, whichever will turn on the suppression system, and then close all vehicle doors.

S20.3.4 Wait 10 seconds, then check whether the air bag system is activated.

S20.4 *Low risk deployment test.* Each vehicle that is certified as complying

with S19.3 shall meet the following test requirements.

S20.4.1 Position the right front outboard vehicle seat in the full forward seat track position, adjust the seat height (if adjustable) to the mid-height position, and adjust the seat back (if adjustable) to the nominal design position for a 50th percentile adult male as specified in S8.1.3. Position adjustable lumbar supports so that the lumbar support is in its lowest, retracted or deflated adjustment position. Position any adjustable parts of the seat that provide additional support so that they are in the lowest or most open adjustment position. If the seat cushion adjusts fore and aft, independent of the seat back, set this adjustment to the full rearward position. If adjustable, set the head restraint at the full down position. If the child restraint or dummy contacts the vehicle interior, move the seat rearward to the next detent that provides clearance. If the seat is a power seat, move the seat rearward while assuring that there is a maximum of 5 mm (0.2 in) clearance.

S20.4.2 The vehicle shall comply in tests using any child restraint specified in section B and section C of appendix A to this standard.

S20.4.3 Locate a vertical plane through the longitudinal centerline of the child restraint. This will be referred to as ''Plane A''.

S20.4.4 For bucket seats, ''Plane B'' refers to a vertical plane parallel to the vehicle longitudinal centerline through the geometric center of the right front outboard seat cushion. For bench seats, ''Plane B'' refers to a vertical plane through the right front outboard seat parallel to the vehicle longitudinal centerline that is the same distance from the longitudinal centerline of the vehicle as the center of the steering wheel.

S20.4.5 Align the child restraint system facing rearward such that Plane A is aligned with Plane B.

S20.4.6 If the child restraint is certified to S5.9 of FMVSS No. 213, and the vehicle seat has an anchorage system as specified in FMVSS No. 225, attach the child restraint to the vehicle seat anchorage instead of aligning the planes. Do not attach the vehicle safety belt.

S20.4.7 While maintaining the child restraint position achieved in S20.4.5, secure the child restraint by following, to the extent possible, the child restraint manufacturer's directions regarding proper installation of the restraint in the rear facing mode. Place any adjustable seat belt anchorages at the manufacturer's nominal design position for a 50th percentile adult male occupant. Cinch the vehicle belts to any tension from zero up to 134 N (30 lb) to secure the child restraint. Measure belt tension in a flat, straight section of the lap belt between the child restraint belt path and the contact point with the belt anchor or vehicle seat, on the side away from the buckle (to avoid interference from the shoulder portion of the belt).

S20.4.8 Position the 49 CFR Part 572 Subpart R 12-month-old CRABI dummy in the child restraint by following, to the extent possible, the manufacturer's instructions provided with the child restraint for seating infants.

S20.4.9 Deploy the right front outboard frontal air bag system. If the air bag system contains a multistage inflator, the vehicle shall be able to comply at any stage or combination of stages or time delay between successive stages that could occur in the presence of an infant in a rear facing child restraint and a 49 CFR Part 572, Subpart R 12-month-old CRABI dummy positioned according to S20.4 in a rigid barrier crash test at speeds up to 64 km/h (40 mph).

S21 *Requirements using 3-year-old child dummies.*

S21.1 Each vehicle that is certified as complying with S14 shall, at the option of the manufacturer, meet the requirements specified in S21.2, S21.3, S21.4 or S21.5, under the test procedures specified in S22 or S28, as applicable.

S21.2 *Option 1—Automatic suppression feature.* Each vehicle shall meet the requirements specified in S21.2.1 through S21.2.3.

S21.2.1 The vehicle shall be equipped with an automatic suppression feature for the passenger air bag which results in deactivation of the air bag during each of the static tests specified in S22.2 (using a 49 CFR Part 572 Subpart P 3-year-old child dummy and, as applicable, any child restraint specified in

section C and section D of appendix A to this standard), and activation of the air bag system during each of the static tests specified in S22.3 (using a 49 CFR Part 572 Subpart O 5th percentile adult female dummy).

S21.2.2 The vehicle shall be equipped with a telltale light meeting the requirements specified in S19.2.2.

S21.2.3 The vehicle shall be equipped with a mechanism that indicates whether the air bag is suppressed, regardless of whether the passenger seat is occupied. The mechanism need not be located in the occupant compartment unless it is the telltale described in S21.2.2.

S21.3 *Option 2—Dynamic automatic suppression system that suppresses the air bag when an occupant is out of position.* (This option is available under the conditions set forth in S27.1.) The vehicle shall be equipped with a dynamic automatic suppression system for the passenger air bag system which meets the requirements specified in S27.

S21.4 *Option 3—Low risk deployment.* Each vehicle shall meet the injury criteria specified in S21.5 of this standard when the passenger air bag is deployed in accordance with both of the low risk deployment test procedures specified in S22.4.

S21.5 *Injury criteria for the 49 CFR Part 572, Subpart P 3-year-old child test dummy.*

S21.5.1 All portions of the test dummy shall be contained within the outer surfaces of the vehicle passenger compartment.

S21.5.2 *Head injury criteria.*

(a) For any two points in time, t_1 and t_2, during the event which are separated by not more than a 15 millisecond time interval and where t_1 is less than t_2, the head injury criterion (HIC_{15}) shall be determined using the resultant head acceleration at the center of gravity of the dummy head, a_r, expressed as a multiple of g (the acceleration of gravity) and shall be calculated using the expression:

$$\left[\frac{1}{(t_2 t_1)}\int_{t_1}^{t_2} a_r dt\right]^{2.5} (t_2 t_1)$$

(b) The maximum calculated HIC_{15} value shall not exceed 570.

S21.5.3 The resultant acceleration calculated from the output of the thoracic instrumentation shall not exceed 55 g's, except for intervals whose cumulative duration is not more than 3 milliseconds.

S21.5.4 Compression deflection of the sternum relative to the spine, as determined by instrumentation, shall not exceed 34 millimeters (1.3 in).

S21.5.5 *Neck injury.* When measuring neck injury, each of the following injury criteria shall be met.

(a) *Nij.*

(1) The shear force (Fx), axial force (Fz), and bending moment (My) shall be measured by the dummy upper neck load cell for the duration of the crash event as specified in S4.11. Shear force, axial force, and bending moment shall be filtered for Nij purposes at SAE J211/1 rev. Mar95 Channel Frequency Class 600 (see S4.7).

(2) During the event, the axial force (Fz) can be either in tension or compression while the occipital condyle bending moment (Mocy) can be in either flexion or extension. This results in four possible loading conditions for Nij: Tension-extension (Nte), tension-flexion (Ntf), compression-extension (Nce), or compression-flexion (Ncf).

(3) When calculating Nij using equation S21.5.5(a)(4), the critical values, Fzc and Myc, are:

(i) Fzc = 2120 N (477 lbf) when Fz is in tension

(ii) Fzc = 2120 N (477 lbf) when Fz is in compression

(iii) Myc = 68 Nm (50 lbf-ft) when a flexion moment exists at the occipital condyle

(iv) Myc = 27 Nm (20 lbf-ft) when an extension moment exists at the occipital condyle.

(4) At each point in time, only one of the four loading conditions occurs and the Nij value corresponding to that loading condition is computed and the three remaining loading modes shall be considered a value of zero. The expression for calculating each Nij loading condition is given by:

Nij = (Fz / Fzc) + (Mocy / Myc)

(5) None of the four Nij values shall exceed 1.0 at any time during the event.

(b) *Peak tension*. Tension force (Fz), measured at the upper neck load cell, shall not exceed 1130 N (254 lbf) at any time.

(c) *Peak compression*. Compression force (Fz), measured at the upper neck load cell, shall not exceed 1380 N (310 lbf) at any time.

S21.5.6 Unless otherwise indicated, instrumentation for data acquisition, data channel frequency class, and moment calculations are the same as given in 49 CFR Part 572 Subpart P 3-year-old child test dummy.

S22 *Test procedure for S21*.

S22.1 *General provisions and definitions*.

S22.1.1 Tests specifying the use of a forward facing child restraint, including a booster seat where applicable, may be conducted using any such restraint listed in section C and section D of Appendix A of this standard, respectively. The child restraint may be unused or have been previously used only for automatic suppression tests. If it has been used, there shall not be any visible damage prior to the test. Booster seats are to be used in the manner appropriate for a 3-year-old child of the same height and weight as the 3-year-old child dummy.

S22.1.2 Unless otherwise specified, each vehicle certified to this option shall comply in tests conducted with the right front outboard seating position at the full rearward, middle, and the full forward positions. If the dummy contacts the vehicle interior, move the seat rearward to the next detent that provides clearance. If the seat is a power seat, move the seat rearward while assuring that there is a maximum of 5 mm (0.2 in) clearance.

S22.1.3 Except as otherwise specified, if the child restraint has an anchorage system as specified in S5.9 of FMVSS No. 213 and is tested in a vehicle with a right front outboard vehicle seat that has an anchorage system as specified in FMVSS No. 225, the vehicle shall comply with the belted test conditions with the restraint anchorage system attached to the vehicle seat anchorage system and the vehicle seat belt unattached. It shall also comply with the belted test conditions with the restraint anchorage system unattached to the vehicle seat anchorage system and the vehicle seat belt attached.

S22.1.4 Do not attach any tethers.

S22.1.5 The definitions provided in S16.3.1 through S16.3.10 apply to the tests specified in S22.

S22.1.6 For leg and thigh angles use the following references:

(a) *Thigh*—a straight line on the thigh skin between the center of the 5/16 × ½ in. screw (part 9001024, item 10 in drawing 210–0000 sheet 2 of 7, complete assembly (HYB III 3 YR OLD)) and the knee bolt (part 210–5301 in drawing 210–5000–1 & –1, leg assembly).

(b) *Leg*—a straight line on the leg skin between the center of the ankle bolt (part 210–5701 in drawing 210–5000–1 & –2, leg assembly) and the knee bolt (part 210–5301 in drawing 210–5000–1 & –2, leg assembly).

S22.1.7 *Seat set-up*. Unless otherwise stated,

S22.1.7.1 *Lumbar support adjustment*. Position adjustable lumbar supports so that the lumbar support is in its lowest, retracted or deflated adjustment position.

S22.1.7.2 *Other seat adjustments*. Position any adjustable parts of the seat that provide additional support so that they are in the lowest or most open adjustment position.

S22.1.7.3 If the seat cushion adjusts fore and aft, independent of the seat back, set this adjustment to the full rearward position.

S22.1.7.4 If the seat height is adjustable, determine the maximum and minimum heights at the full rearward seat track position, the middle seat track position, and the full forward seat track position. Set the seat at the midpoint height for each of the three fore-aft test positions.

S22.1.7.5 The seat back angle, if adjustable, is set at the manufacturer's nominal design seat back angle for a 50th percentile adult male as specified in S8.1.3.

S22.1.7.6 If adjustable, set the head restraint at the full down and full forward position.

S22.2 *Static tests of automatic suppression feature which shall result in deactivation of the passenger air bag*. Each vehicle that is certified as complying with S21.2 shall meet the following test requirements:

S22.2.1 *Belted test with forward facing child restraints or booster seats.*

S22.2.1.1 Install the restraint in the right front outboard seat in accordance, to the extent possible, with the child restraint manufacturer's instructions provided with the seat for use by children with the same height and weight as the 3-year-old child dummy.

S22.2.1.2 Locate a vertical plane through the longitudinal centerline of the child restraint. This will be referred to as ''Plane A''.

S22.2.1.3 For bucket seats, ''Plane B'' refers to a vertical longitudinal plane through the longitudinal centerline of the seat cushion of the right front outboard vehicle seat. For bench seats, ''Plane B'' refers to a vertical plane through the right front outboard vehicle seat parallel to the vehicle longitudinal centerline the same distance from the longitudinal centerline of the vehicle as the center of the steering wheel.

22.2.1.4 The vehicle shall comply in both of the following positions, if applicable:

(a) Without attaching the child restraint anchorage system as specified in S5.9 of FMVSS No. 213 to a vehicle seat anchorage system specified in FMVSS No. 225 and without attaching any tethers, align the child restraint system facing forward such that Plane A is aligned with Plane B.

(b) If the child restraint is certified to S5.9 of FMVSS No. 213, and the vehicle seat has an anchorage system as specified in FMVSS No. 225, attach the child restraint to the vehicle seat anchorage instead of aligning the planes. Do not attach the vehicle safety belt.

S22.2.1.5 *Forward facing child restraint*

S22.2.1.5.1 Place any adjustable seat belt anchorages at the vehicle manufacturer's nominal design position for a 50th percentile adult male occupant. Cinch the vehicle belts to any tension from zero up to 134 N (30 lb) to secure the child restraint. Measure belt tension in a flat, straight section of the lap belt between the child restraint belt path and the contact point with the belt anchor or vehicle seat, on the side away from the buckle (to avoid interference from the shoulder portion of the belt).

S22.2.1.5.2 Position the 49 CFR Part 572 Subpart P 3-year-old child dummy in the child restraint such that the dummy's lower torso is centered on the child restraint and the dummy's spine is against the seat back of the child restraint. Place the arms at the dummy's sides.

S22.2.1.5.3 Attach all belts that come with the child restraint that are appropriate for a child of the same height and weight as the 3-year-old child dummy, if any, by following, to the extent possible, the manufacturer's instructions provided with the child restraint for seating children.

S22.2.1.6 *Booster seat*

S22.2.1.6.1 Place any adjustable seat belt anchorages at the vehicle manufacturer's nominal design position for a 50th percentile adult male occupant. For booster seats designed to be secured to the vehicle seat even when empty, cinch the vehicle belts to any tension from zero up to 134 N (30 lb) to secure the booster seat. Measure belt tension in a flat, straight section of the lap belt between the child restraint belt path and the contact point with the belt anchor or vehicle seat, on the side away from the buckle (to avoid interference from the shoulder portion of the belt).

S22.2.1.6.2 Position the 49 CFR Part 572 Subpart P 3-year-old child dummy in the booster seat such that the dummy's lower torso is centered on the booster seat cushion and the dummy's back is parallel to and in contact with the booster seat back or, if there is no booster seat back, the vehicle seat back. Place the arms at the dummy's sides.

S22.2.1.6.3 If applicable, attach all belts that come with the child restraint that are appropriate for a child of the same height and weight as the 3-year-old child dummy, if any, by following, to the extent possible, the manufacturer's instructions provided with the child restraint for seating children.

S22.2.1.6.4 If applicable, place the Type 2 manual belt around the test dummy and fasten the latch. Remove all slack from the lap belt portion. Pull the upper torso webbing out of the retractor and allow it to retract; repeat this four times. Apply a 9 to 18 N (2 to

4 lb) tension load to the lap belt. Allow the excess webbing in the upper torso belt to be retracted by the retractive force of the retractor.

S22.2.1.7 Start the vehicle engine or place the ignition in the ''on'' position, whichever will turn on the suppression system, and then close all vehicle doors.

S22.2.1.8 Wait 10 seconds, then check whether the air bag is deactivated.

S22.2.2 *Unbelted tests with dummies.* Place the 49 CFR Part 572 Subpart P 3-year-old child dummy on the right front outboard seat in any of the following positions (without using a child restraint or booster seat or the vehicle's seat belts):

S22.2.2.1 *Sitting on seat with back against seat back*

(a) Position the dummy in the seated position and place it on the right front outboard seat.

(b) In the case of vehicles equipped with bench seats, position the midsagittal plane of the dummy vertically and parallel to the vehicle's longitudinal centerline and the same distance from the vehicle's longitudinal centerline as the center of the steering wheel. In the case of vehicles equipped with bucket seats, position the midsagittal plane of the dummy vertically such that it coincides with the longitudinal centerline of the seat cushion. Position the torso of the dummy against the seat back. Position the dummy's thighs against the seat cushion.

(c) Allow the legs of the dummy to extend off the surface of the seat.

(d) Rotate the dummy's upper arms down until they contact the seat back.

(e) Rotate the dummy's lower arms until the dummy's hands contact the seat cushion.

(f) Start the vehicle engine or place the ignition in the ''on'' position, whichever will turn on the suppression system, and then close all vehicle doors.

(g) Wait 10 seconds, then check whether the air bag is deactivated.

S22.2.2.2 *Sitting on seat with back against reclined seat back.* Repeat the test sequence in S22.2.2.1 with the seat back angle 25 degrees rearward of the manufacturer's nominal design position for the 50th percentile adult male. If the seat will not recline 25 degrees rearward of the nominal design position, use the closest position that does not exceed 25 degrees.

S22.2.2.3 *Sitting on seat with back not against seat back.*

(a) Position the dummy in the seated position and place it on the right front outboard seat.

(b) In the case of vehicles equipped with bench seats, position the midsagittal plane of the dummy vertically and parallel to the vehicle's longitudinal centerline and the same distance from the vehicle's longitudinal centerline as the center of the steering wheel. In the case of vehicles equipped with bucket seats, position the midsagittal plane of the dummy vertically such that it coincides with the longitudinal centerline of the seat cushion. Position the dummy with the spine vertical so that the horizontal distance from the dummy's back to the seat back is no less than 25 mm (1.0 in) and no more than 150 mm (6.0 in), as measured along the dummy's midsagittal plane at the mid-sternum level. To keep the dummy in position, a material with a maximum breaking strength of 311 N (70 lb) may be used to hold the dummy.

(c) Position the dummy's thighs against the seat cushion.

(d) Allow the legs of the dummy to extend off the surface of the seat.

(e) Position the upper arms parallel to the spine and rotate the dummy's lower arms until the dummy's hands contact the seat cushion.

(f) Start the vehicle engine or place the ignition in the ''on'' position, whichever will turn on the suppression system, and then close all vehicle doors.

(g) Wait 10 seconds, then check whether the air bag is deactivated.

S22.2.2.4 *Sitting on seat edge, spine vertical, hands by the dummy's sides.*

(a) In the case of vehicles equipped with bench seats, position the midsagittal plane of the dummy vertically and parallel to the vehicle's longitudinal centerline and the same distance from the vehicle's longitudinal centerline as the center of the steering wheel. In the case of vehicles equipped with bucket seats, position the midsagittal plane of the dummy

vertically such that it coincides with the longitudinal centerline of the seat cushion.

(b) Position the dummy in the seated position forward in the seat such that the legs are vertical and the back of the legs rest against the front of the seat with the spine vertical. If the dummy's feet contact the floor pan, rotate the legs forward until the dummy is resting on the seat with the feet positioned flat on the floor pan and the dummy spine vertical. To keep the dummy in position, a material with a maximum breaking strength of 311 N (70 lb) may be used to hold the dummy.

(c) Place the upper arms parallel to the spine.

(d) Lower the dummy's lower arms such that they contact the seat cushion.

(e) Start the vehicle engine or place the ignition in the ''on'' position, whichever will turn on the suppression system, and then close all vehicle doors.

(f) Wait 10 seconds, then check whether the air bag is deactivated.

S22.2.2.5 *Standing on seat, facing forward.*

(a) In the case of vehicles equipped with bench seats, position the midsagittal plane of the dummy vertically and parallel to the vehicle's longitudinal centerline and the same distance from the vehicle's longitudinal centerline as the center of the steering wheel rim. In the case of vehicles equipped with bucket seats, position the midsagittal plane of the dummy vertically such that it coincides with the longitudinal centerline of the seat cushion. Position the dummy in a standing position on the right front outboard seat cushion facing the front of the vehicle while placing the heels of the dummy's feet in contact with the seat back.

(b) Rest the dummy against the seat back, with the arms parallel to the spine.

(c) If the head contacts the vehicle roof, recline the seat so that the head is no longer in contact with the vehicle roof, but allow no more than 5 mm (0.2 in) distance between the head and the roof. If the seat does not sufficiently recline to allow clearance, omit the test.

(d) If necessary use a material with a maximum breaking strength of 311 N (70 lb) or spacer blocks to keep the dummy in position.

(e) Start the vehicle engine or place the ignition in the ''on'' position, whichever will turn on the suppression system, and then close all vehicle doors.

(f) Wait 10 seconds, then check whether the air bag is deactivated.

S22.2.2.6 *Kneeling on seat, facing forward.*

(a) In the case of vehicles equipped with bench seats, position the midsagittal plane of the dummy vertically and parallel to the vehicle's longitudinal centerline and the same distance from the vehicle's longitudinal centerline as the center of the steering wheel. In the case of vehicles equipped with bucket seats, position the midsagittal plane of the dummy vertically such that it coincides with the longitudinal centerline of the seat cushion.

(b) Position the dummy in a kneeling position in the right front outboard seat with the dummy facing the front of the vehicle with its toes at the intersection of the seat back and seat cushion. Position the dummy so that the spine is vertical. Push down on the legs so that they contact the seat as much as possible and then release. Place the arms parallel to the spine.

(c) If necessary use a material with a maximum breaking strength of 311 N (70 lb) or spacer blocks to keep the dummy in position.

(d) Start the vehicle engine or place the ignition in the ''on'' position, whichever will turn on the suppression system, and then close all vehicle doors.

(e) Wait 10 seconds, then check whether the air bag is deactivated.

S22.2.2.7 *Kneeling on seat, facing rearward.*

(a) In the case of vehicles equipped with bench seats, position the midsagittal plane of the dummy vertically and parallel to the vehicle's longitudinal centerline and the same distance from the vehicle's longitudinal centerline as the center of the steering wheel. In the case of vehicles equipped with bucket seats, position the midsagittal plane of the dummy

vertically such that it coincides with the longitudinal centerline of the seat cushion.

(b) Position the dummy in a kneeling position in the right front outboard seat with the dummy facing the rear of the vehicle. Position the dummy such that the dummy's head and torso are in contact with the seat back. Push down on the legs so that they contact the seat as much as possible and then release. Place the arms parallel to the spine.

(c) Start the vehicle engine or place the ignition in the ''on'' position, whichever will turn on the suppression system, and then close all vehicle doors.

(d) Wait 10 seconds, then check whether the air bag is deactivated.

S22.2.2.8 *Lying on seat.* This test is performed only in vehicles with 3 designated front seating positions.

(a) Lay the dummy on the right front outboard seat such that the following criteria are met:

(1) The midsagittal plane of the dummy is horizontal,

(2) The dummy's spine is perpendicular to the vehicle's longitudinal axis,

(3) The dummy's arms are parallel to its spine,

(4) A plane passing through the two shoulder joints of the dummy is vertical,

(5) The anterior of the dummy is facing the vehicle front,

(6) The head of the dummy is positioned towards the passenger door, and

(7) The horizontal distance from the topmost point of the dummy's head to the vehicle door is 50 to 100 mm (2–4 in).

(8) The dummy is as far back in the seat as possible.

(b) Rotate the thighs as much as possible toward the chest of the dummy and rotate the legs as much as possible against the thighs.

(c) Move the dummy's upper left arm parallel to the vehicle's transverse plane and the lower left arm 90 degrees to the upper arm. Rotate the lower left arm about the elbow joint and toward the dummy's head until movement is obstructed.

(d) Start the vehicle engine or place the ignition in the ''on'' position, whichever will turn on the suppression system, and then close all vehicle doors.

(e) Wait 10 seconds, then check whether the air bag is deactivated.

S22.3 *Static tests of automatic suppression feature which shall result in activation of the passenger air bag system.*

S22.3.1 Each vehicle certified to this option shall comply in tests conducted with the right front outboard seating position at the full rearward, middle, and, subject to S16.3.3.1.8, full forward positions. All tests are conducted with the seat height, if adjustable, in the mid-height position.

S22.3.2 Place a 49 CFR Part 572 Subpart O 5th percentile adult female test dummy at the right front outboard seating position of the vehicle, in accordance with procedures specified in S16.3.3 of this standard, except as specified in S22.3.1. Do not fasten the seat belt.

S22.3.3 Start the vehicle engine or place the ignition in the ''on'' position, whichever will turn on the suppression system, and then close all vehicle doors.

S22.3.4 Wait 10 seconds, then check whether the air bag system is activated.

S22.4 *Low risk deployment tests.*

S22.4.1 Each vehicle that is certified as complying with S21.4 shall meet the following test requirements with the 49 CFR Part 572, Subpart P 3-year-old child dummy in both of the following positions: Position 1 (S22.4.2) and Position 2 (S22.4.3).

S22.4.1.1 Locate and mark a point on the front of the dummy's chest jacket on the midsaggital plane which is 114 mm (4.5 in) ± 3 mm (± 0.1 in) along the surface of the skin from the top of the skin at the neck line. This is referred to as ''Point 1.''

S22.4.1.2 Locate the vertical plane parallel to the vehicle longitudinal centerline through the geometric center of the opening through which the right front air bag deploys into the occupant compartment. This is referred to as ''Plane D.''

S22.4.1.3 Locate the horizontal plane through the geometric center of the opening through which the right front

air bag deploys into the occupant compartment. This is referred to as ''Plane C.''

S22.4.2 *Position 1 (chest on instrument panel).*

S22.4.2.1 If a seat is adjustable in the fore and aft and/or vertical directions, move the seat to the rear-most seating position and full-down height adjustment. If the seat cushion adjusts fore and aft, independent of the entire seat, adjust the seat cushion to the full-rearward position. If the seat back is adjustable, place the seat back at the manufacturer's nominal design seat back angle for a 50th percentile adult male as specified in S8.1.3. Position any adjustable parts of the seat that provide additional support so that they are in the lowest or most open adjustment position. If adjustable, set the head restraint in the lowest position.

S22.4.2.2 Place the dummy in the front passenger seat such that:

S22.4.2.2.1 The midsagittal plane is coincident with Plane D.

S22.4.2.2.2 The legs are initially vertical to the floor pan. The legs and thighs shall be adjusted to the extent necessary for the head/torso to contact the instrument panel as specified in S22.4.2.3.

S22.4.2.2.3 The upper arms are parallel to the torso and the hands are in contact with the thighs.

S22.4.2.3 Without changing the seat position and with the dummy's thorax instrument cavity rear face vertical, move the dummy forward until the dummy head/torso contacts the instrument panel. If the dummy loses contact with the seat cushion because of the forward movement, maintain the height of the dummy and the angle of the thigh with respect to the torso. Once contact is made, raise the dummy vertically until Point 1 lies in Plane C. If the dummy's head contacts the windshield and keeps Point 1 from reaching Plane C, lower the dummy until there is no more than 5 mm (0.2 in) clearance between the head and the windshield. (The dummy shall remain in contact with the instrument panel while being raised or lowered, which may change the dummy's fore-aft position.)

S22.4.2 If possible, position the legs of the dummy so that the legs are vertical and the feet rest flat on the floor pan of the vehicle. If the positioning against the instrument panel does not allow the feet to be on the floor pan, the feet shall be parallel to the floor pan.

S22.4.2.5 If necessary, material with a maximum breaking strength of 311 N (70 lb) and spacer blocks may be used to support the dummy in position. The material should support the torso rather than the head. Support the dummy so that there is minimum interference with the full rotational and translational freedom for the upper torso of the dummy and the material does not interfere with the air bag.

S22.4.3 *Position 2 (head on instrument panel).*

S22.4.3.1 Place the passenger seat in the full rearward seating position. Place the seat back at the manufacturer's nominal design seat back angle for a 50th percentile adult male as specified in S8.1.3. If adjustable in the vertical direction, place the seat in the mid-height position. If the seat cushion adjusts fore and aft, independent of the entire seat, adjust the seat cushion to the full rearward position. Position any adjustable parts of the seat that provide additional support so that they are in the lowest or most open adjustment position. If adjustable, set the head restraint in the lowest position.

S22.4.3.2 Place the dummy in the front passenger seat such that:

S22.4.3.2.1 The midsagittal plane is coincident with Plane D.

S22.4.3.2.2 The legs are vertical to the floor pan, the back of the legs are in contact with the seat cushion, and the dummy's thorax instrument cavity rear face is vertical. If it is not possible to position the dummy with the legs in the prescribed position, rotate the legs forward until the dummy is resting on the seat with the feet positioned flat on the floor pan, and the back of the legs are in contact with the front of the seat cushion. Set the transverse distance between the longitudinal centerlines at the front of the dummy's knees at 86 to 91 mm (3.4 to 3.6 in), with the thighs and the legs of the dummy in vertical planes.

S22.4.3.2.3 The upper arms are parallel to the torso and the hands are in contact with the thighs.

S22.4.3.3 Move the seat forward, while maintaining the thorax instrument cavity rear face orientation until any part of the dummy contacts the vehicle's instrument panel.

S22.4.3.4 If dummy contact has not been made with the vehicle's instrument panel at the full forward seating position of the seat, slide the dummy forward until contact is made. Maintain the thorax instrument cavity rear face vertical orientation, the height of the dummy, and the angle of the thigh with respect to the horizontal.

S22.4.3.5 If head/torso contact with the instrument panel has not been made, maintain the angle of the thighs with respect to the horizontal while applying a force towards the front of the vehicle on the spine of the dummy between the shoulder joints until the head or torso comes into contact with the vehicle's instrument panel.

S22.4.3.6 If necessary, material with a maximum breaking strength of 311 N (70 lb) and spacer blocks may be used to support the dummy in position. The material should support the torso rather than the head. Support the dummy so that there is minimum interference with the full rotational and translational freedom for the upper torso of the dummy and the material does not interfere with the air bag.

S22.4.4 Deploy the right front outboard frontal air bag system. If the frontal air bag system contains a multistage inflator, the vehicle shall be able to comply with the injury criteria at any stage or combination of stages or time delay between successive stages that could occur in a rigid barrier crash test at or below 26 km/h (16 mph), under the test procedure specified in S22.5.

S22.5 *Test procedure for determining stages of air bag systems subject to low risk deployment (low speed crashes) test requirement.*

S22.5.1 The test described in S22.5.2 shall be conducted with an unbelted 50th percentile adult male test dummy in the driver seating position according to S8 as it applies to that seating position and an unbelted 5th percentile adult female test dummy either in the right front seating position according to S16 as it applies to that seating position or at any fore-aft seat position on the passenger side.

S22.5.2 Impact the vehicle traveling longitudinally forward at any speed, up to and including 26 km/h (16 mph) into a fixed rigid barrier that is perpendicular ± 5 degrees to the line of travel of the vehicle under the applicable conditions of S8, S10, and S16 excluding S10.7, S10.8, S10.9, and S16.3.5.

S22.5.3 Determine which inflation stage or combination of stages are fired and determine the time delay between successive stages. That stage or combination of stages, with time delay between successive stages, shall be used in deploying the air bag when conducting the low risk deployment tests described in S22.4, S24.4, and S26.

S22.5.4 If the air bag does not deploy in the impact described in S22.5.2, the low risk deployment tests described in S22.4, S24.4, and S26 shall be conducted with all stages using the maximum time delay between stages.

S23 *Requirements using 6-year-old child dummies.*

S23.1 Each vehicle that is certified as complying with S14 shall, at the option of the manufacturer, meet the requirements specified in S23.2, S23.3, or S23.4, under the test procedures specified in S24 or S28, as applicable.

S23.2 *Option 1—Automatic suppression feature.* Each vehicle shall meet the requirements specified in S23.2.1 through S23.2.3.

S23.2.1 The vehicle shall be equipped with an automatic suppression feature for the passenger frontal air bag system which results in deactivation of the air bag during each of the static tests specified in S24.2 (using a 49 CFR Part 572 Subpart N 6-year-old child dummy in any of the child restraints specified in section D of Appendix A of this standard), and activation of the air bag system during each of the static tests specified in S24.3 (using a 49 CFR Part 572 Subpart O 5th percentile adult female dummy).

S23.2.2 The vehicle shall be equipped with a telltale light meeting the requirements specified in S19.2.2.

S23.2.3 The vehicle shall be equipped with a mechanism that indicates whether the air bag is suppressed, regardless of whether the passenger seat is occupied. The mechanism need not

be located in the occupant compartment unless it is the telltale described in S23.2.2.

S23.3 *Option 2—Dynamic automatic suppression system that suppresses the air bag when an occupant is out of position.* (This option is available under the conditions set forth in S27.1.) The vehicle shall be equipped with a dynamic automatic suppression system for the passenger frontal air bag system which meets the requirements specified in S27.

S23.4 *Option 3—Low risk deployment.* Each vehicle shall meet the injury criteria specified in S23.5 of this standard when the passenger air bag is statically deployed in accordance with both of the low risk deployment test procedures specified in S24.4.

S23.5 *Injury criteria for the 49 CFR Part 572 Subpart N 6-year-old child dummy.*

S23.5.1 All portions of the test dummy shall be contained within the outer surfaces of the vehicle passenger compartment.

S23.5.2 *Head injury criteria.*

(a) For any two points in time, t_1 and t_2, during the event which are separated by not more than a 15 millisecond time interval and where t_1 is less than t_2, the head injury criterion (HIC_{15}) shall be determined using the resultant head acceleration at the center of gravity of the dummy head, a_r, expressed as a multiple of g (the acceleration of gravity) and shall be calculated using the expression:

$$\left[\frac{1}{(t_2 t_1)}\int_{t_1}^{t_2} a_r dt\right]^{2.5}(t_2 t_1)$$

(b) The maximum calculated HIC_{15} value shall not exceed 700.

S23.5.3 The resultant acceleration calculated from the output of the thoracic instrumentation shall not exceed 60 g's, except for intervals whose cumulative duration is not more than 3 milliseconds.

S23.5.4 Compression deflection of the sternum relative to the spine, as determined by instrumentation, shall not exceed 40 mm (1.6 in).

S23.5.5 *Neck injury.* When measuring neck injury, each of the following injury criteria shall be met.

(a) *Nij.*

(1) The shear force (Fx), axial force (Fz), and bending moment (My) shall be measured by the dummy upper neck load cell for the duration of the crash event as specified in S4.11. Shear force, axial force, and bending moment shall be filtered for Nij purposes at SAE J211/1 rev. Mar95 Channel Frequency Class 600 (see S4.7).

(2) During the event, the axial force (Fz) can be either in tension or compression while the occipital condyle bending moment (Mocy) can be in either flexion or extension. This results in four possible loading conditions for Nij: tension-extension (Nte), tension-flexion (Ntf), compression-extension (Nce), or compression-flexion (Ncf).

(3) When calculating Nij using equation S23.5.5(a)(4), the critical values, Fzc and Myc, are:

(i) Fzc = 2800 N (629 lbf) when Fz is in tension

(ii) Fzc = 2800 N (629 lbf) when Fz is in compression

(iii) Myc = 93 Nm (69 lbf-ft) when a flexion moment exists at the occipital condyle

(iv) Myc = 37 Nm (27 lbf-ft) when an extension moment exists at the occipital condyle.

(4) At each point in time, only one of the four loading conditions occurs and the Nij value corresponding to that loading condition is computed and the three remaining loading modes shall be considered a value of zero. The expression for calculating each Nij loading condition is given by:

Nij = (Fz / Fzc) + (Mocy / Myc)

(5) None of the four Nij values shall exceed 1.0 at any time during the event.

(b) *Peak tension.* Tension force (Fz), measured at the upper neck load cell, shall not exceed 1490 N (335 lbf) at any time.

(c) *Peak compression.* Compression force (Fz), measured at the upper neck load cell, shall not exceed 1820 N (409 lbf) at any time.

S23.5.6 Unless otherwise indicated, instrumentation for data acquisition, data channel frequency class, and moment calculations are the same as given for the 49 CFR Part 572 Subpart N 6-year-old child test dummy.

S24 *Test procedure for S23.*

S24.1 *General provisions and definitions.*

S24.1.1 Tests specifying the use of a booster seat may be conducted using any such restraint listed in section D of Appendix A of this standard. The booster seat may be unused or have been previously used only for automatic suppression. If it has been used, there shall not be any visible damage prior to the test. Booster seats are to be used in the manner appropriate for a 6-year-old child of the same height and weight as the 6-year-old child dummy.

S24.1.2 Unless otherwise specified, each vehicle certified to this option shall comply in tests conducted with the right front outboard seating position at the full rearward seat track position, the middle seat track position, and the full forward seat track position. If the dummy contacts the vehicle interior, move the seat rearward to the next detent that provides clearance. If the seat is a power seat, move the seat rearward while assuring that there is a maximum of 5 mm (0.2 in) distance between the vehicle interior and the point on the dummy that would first contact the vehicle interior. All tests are conducted with the seat height, if adjustable, in the mid-height position, and with the seat back angle, if adjustable, at the manufacturer=s nominal design seat back angle for a 50th percentile adult male as specified in S8.1.3.

S24.1.3 Except as otherwise specified, if the booster seat has an anchorage system as specified in S5.9 of FMVSS No. 213 and is tested in a vehicle with a right front outboard vehicle seat that has an anchorage system as specified in FMVSS No. 225, the vehicle shall comply with the belted test conditions with the restraint anchorage system attached to the vehicle seat anchorage system and the vehicle seat belt unattached. It shall also comply with the belted test conditions with the restraint anchorage system unattached to the vehicle seat anchorage system and the vehicle seat belt attached. The vehicle shall comply with the unbelted test conditions with the restraint anchorage system unattached to the vehicle seat anchorage system.

S24.1.4 Do not attach any tethers.

S24.1.5 The definitions provided in S16.3.1 through S16.3.10 apply to the tests specified in S24.

S24.1.6 For leg and thigh angles, use the following references:

S24.1.6.1 *Thigh*—a straight line on the thigh skin between the center of the 5/16–18 UNC–2B threaded access hole in the upper leg clamp (drawing 127–4004, 6 YR H3—upper leg clamp) and the knee screw (part 9000248 in drawing 127–4000–1 & –2, leg assembly).

S24.1.6.2 *Leg*—a straight line on the leg skin between the center of the lower leg screw (part 9001170 in drawing 127–4000–1 & –2, leg assembly) and the knee screw (part 9000248 in drawing 127–4000–1 & –2, leg assembly).

S24.2 *Static tests of automatic suppression feature which shall result in deactivation of the passenger air bag.* Each vehicle that is certified as complying with S23.2 shall meet the following test requirements.

S24.2.1 Except as provided in S24.2.2, conduct all tests as specified in S22.2, except that the 49 CFR Part 572 Subpart N 6-year-old child dummy shall be used.

S24.2.2 *Exceptions.* The tests specified in the following paragraphs of S22.2 need not be conducted: S22.2.1.5, S22.2.2.3, S22.2.2.5, S22.2.2.6, S22.2.2.7, and S22.2.2.8.

S24.2.3 *Sitting back in the seat and leaning on the right front passenger door*

(a) Position the dummy in the seated position and place the dummy in the right front outboard seat. For bucket seats, position the midsagittal plane of the dummy vertically such that it coincides with the longitudinal center line of the seat cushion. For bench seats, position the midsagittal plane of the dummy vertically and parallel to the vehicle=s longitudinal centerline and the same distance from the longitudinal centerline of the vehicle as the center of the steering wheel.

(b) Place the dummy's back against the seat back and rest the dummy's thighs on the seat cushion.

(c) Allow the legs and feet of the dummy to extend off the surface of the seat. If this positioning of the dummy's legs is prevented by contact with the instrument panel, move the seat rearward to the next detent that provides clearance. If the seat is a power seat,

move the seat rearward, while assuring that there is a maximum of 5 mm (0.2 in) distance between the vehicle interior and the part of the dummy that was in contact with the vehicle interior.

(d) Rotate the dummy's upper arms toward the seat back until they make contact.

(e) Rotate the dummy's lower arms down until they contact the seat.

(f) Close the vehicle's passenger-side door and then start the vehicle engine or place the ignition in the ''on'' position, whichever will turn on the suppression system.

(g) Push against the dummy's left shoulder to lean the dummy against the door; close all remaining doors.

(h) Wait 10 seconds, then check whether the air bag is deactivated.

S24.3 *Static tests of automatic suppression feature which shall result in activation of the passenger air bag system.*

S24.3.1 Each vehicle certified to this option shall comply in tests conducted with the right front outboard seating position at the full rearward seat track position, the middle seat track position, and, subject to S16.3.3.1.8, the full forward seat track position. All tests are conducted with the seat height, if adjustable, in the mid-height position.

S24.3.2 Place a 49 CFR Part 572 Subpart O 5th percentile adult female test dummy at the right front outboard seating position of the vehicle, in accordance with procedures specified in S16.3.3 of this standard, except as specified in S24.3.1. Do not fasten the seat belt.

S24.3.3 Start the vehicle engine or place the ignition in the ''on'' position, whichever will turn on the suppression system, and then close all vehicle doors.

S24.3.4 Wait 10 seconds, then check whether the air bag system is activated.

S24.4 *Low risk deployment tests.*

S24.4.1 Each vehicle that is certified as complying with S23.4 shall meet the following test requirements with the 49 CFR Part 572 Subpart N 6-year-old child dummy in both of the following positions: Position 1 (S24.4.2) or Position 2 (S24.4.3).

S24.4.1.1 Locate and mark a point on the front of the dummy's chest jacket on the midsagittal plane which is 139 mm (5.5 in) ± 3 mm (± 0.1 in) along the surface of the skin from the top of the skin at the neckline. This is referred to as ''Point 1.''

S24.4.1.2 Locate the vertical plane parallel to the vehicle longitudinal centerline through the geometric center of the opening through which the right front air bag deploys into the occupant compartment. This is referred to as ''Plane D.''

S24.4.1.3 Locate the horizontal plane through the geometric center of the opening through which the right front air bag deploys into the occupant compartment. This is referred to as ''Plane C.''

S24.4.2 *Position 1 (chest on instrument panel).*

S24.4.2.1 If a seat is adjustable in the fore and aft and/or vertical directions, move the seat to the rearmost seating position and full down height adjustment. If the seat cushion adjusts fore and aft, independent of the entire seat, adjust the seat cushion to the full rearward position. If the seat back is adjustable, place the seat back at the manufacturer's nominal design seat back angle for a 50th percentile adult male as specified in S8.1.3. Position any adjustable parts of the seat that provide additional support so that they are in the lowest or most open adjustment position. Position an adjustable head restraint in the lowest position.

S24.4.2.2 Remove the legs of the dummy at the pelvic interface.

S24.4.2.3 Place the dummy in the front passenger seat such that:

(a) The midsagittal plane is coincident with Plane D.

(b) The upper arms are parallel to the torso and the hands are next to where the thighs would be.

(c) Without changing the seat position and with the dummy's thorax instrument cavity rear face 6 degrees forward of the vertical, move the dummy forward until the dummy head/torso contacts the instrument panel. If the dummy loses contact with the seat cushion because of the forward movement, maintain the height of the dummy while moving the dummy forward. If the head contacts the windshield before head/torso contact with the instrument panel, maintain the

thorax instrument cavity angle and move the dummy forward such that the head is following the angle of the windshield until there is head/torso contact with the instrument panel. Once contact is made, raise or lower the dummy vertically until Point 1 lies in Plane C. If the dummy's head contacts the windshield and keeps Point 1 from reaching Plane C, lower the dummy until there is no more than 5 mm (0.2 in) clearance between the head and the windshield. (The dummy shall remain in contact with the instrument panel while being raised or lowered which may change the dummy's fore-aft position.)

S24.4.2.4 If necessary, material with a maximum breaking strength of 311 N (70 lb) and spacer blocks may be used to support the dummy in position. The material should support the torso rather than the head. Support the dummy so that there is minimum interference with the full rotational and translational freedom for the upper torso of the dummy and the material does not interfere with the air bag.

S24.4.3 *Position 2 (head on instrument panel).*

S24.4.3.1 Place the passenger seat in the full rearward seating position. Place the seat back at the manufacturer's nominal design seat back angle for a 50th percentile adult male as specified in S8.1.3. If adjustable in the vertical direction, place the seat in the mid-height position. If the seat cushion adjusts fore and aft, independent of the entire seat, adjust the seat cushion to the full rearward position. Position any adjustable parts of the seat that provide additional support so that they are in the lowest or most open adjustment position. Position an adjustable head restraint in the lowest position.

S24.4.3.2 Place the dummy in the front passenger seat such that:

(a) The midsagittal plane is coincident with Plane D.

(b) The legs are perpendicular to the floor pan, the back of the legs are in contact with the seat cushion, and the dummy's thorax instrument cavity rear face is 6 degrees forward of vertical. If it is not possible to position the dummy with the legs in the prescribed position, rotate the legs forward until the dummy is resting on the seat with the feet positioned flat on the floor pan and the back of the legs are in contact with the front of the seat cushion. Set the transverse distance between the longitudinal centerlines at the front of the dummy's knees at 112 to 117 mm (4.4. to 4.6 in), with the thighs and the legs of the dummy in vertical planes.

(c) The upper arms are parallel to the torso and the hands are in contact with the thighs.

S24.4.3.3 Move the seat forward, while maintaining the thorax instrument cavity rear face orientation until any part of the dummy contacts the vehicle's instrument panel.

S24.4.3.4 If dummy contact has not been made with the vehicle's instrument panel at the full forward seating position of the seat, slide the dummy forward on the seat until contact is made. Maintain the thorax instrument cavity rear face orientation, the height of the dummy, and the angle of the thigh with respect to the horizontal.

S24.4.3.5 If head/torso contact has not been made with the instrument panel, maintain the angle of the thighs with respect to the horizontal while applying a force towards the front of the vehicle on the spine of the dummy between the shoulder joints until the head/torso comes into contact with the vehicle's instrument panel.

S24.4.3.6 If necessary, material with a maximum breaking strength of 311 N (70 lb) and spacer blocks may be used to support the dummy in position. Material should support the torso rather than the head. Support the dummy so that there is minimum interference with the full rotational and translational freedom for the upper torso of the dummy and the material does not interfere with the air bag.

S24.4.4 Deploy the right front outboard frontal air bag system. If the frontal air bag system contains a multistage inflator, the vehicle shall be able to comply with the injury criteria at any stage or combination of stages and at any time delay between successive stages that could occur in a rigid barrier crash at speeds up to 26 km/h (16 mph) under the test procedure specified in S22.5.

S25 *Requirements using an out-of-position 5th percentile adult female dummy at the driver position.*

S25.1 Each vehicle certified as complying with S14 shall, at the option of the manufacturer, meet the requirements specified in S25.2 or S25.3 under the test procedures specified in S26 or S28, as appropriate.

S25.2 *Option 1—Dynamic automatic suppression system that suppresses the air bag when the driver is out of position.* (This option is available under the conditions set forth in S27.1.) The vehicle shall be equipped with a dynamic automatic suppression system for the driver air bag which meets the requirements specified in S27.

S25.3 *Option 2—Low risk deployment.* Each vehicle shall meet the injury criteria specified by S15.3 of this standard, except as modified in S25.4, when the driver air bag is statically deployed in accordance with both of the low risk deployment test procedures specified in S26.

S25.4 *Neck injury criteria driver low risk deployment tests.* When measuring neck injury in low risk deployment tests for the driver position, each of the following neck injury criteria shall be met.

(a) *Nij.*

(1) The shear force (Fx), axial force (Fz), and bending moment (My) shall be measured by the dummy upper neck load cell for the duration of the crash event as specified in S4.11. Shear force, axial force, and bending moment shall be filtered for Nij purposes at SAE J211/1 rev. Mar 95 Channel Frequency Class 600 (see S4.7).

(2) During the event, the axial force (Fz) can be either in tension or compression while the occipital condyle bending moment (Mocy) can be in either flexion or extension. This results in four possible loading conditions for Nij: tension-extension (Nte), tension-flexion (Ntf), compression-extension (Nce), or compression-flexion (Ncf).

(3) When calculating Nij using equation S25.4(a)(4), the critical values, Fzc and Myc, are:

(i) Fzc = 3880 N (872 lbf) when Fz is in tension

(ii) Fzc = 3880 N (872 lbf) when Fz is in compression

(iii) Myc = 155 Nm (114 lbf-ft) when a flexion moment exists at the occipital condyle

(iv) Myc = 61 Nm (45 lbf-ft) when an extension moment exists at the occipital condyle.

(4) At each point in time, only one of the four loading conditions occurs and the Nij value corresponding to that loading condition is computed and the three remaining loading modes shall be considered a value of zero. The expression for calculating each Nij loading condition is given by:

Nij = (Fz / Fzc) + (Mocy / Myc)

(5) None of the four Nij values shall exceed 1.0 at any time during the event.

(b) *Peak tension.* Tension force (Fz), measured at the upper neck load cell, shall not exceed 2070 N (465 lbf) at any time.

(c) *Peak compression.* Compression force (Fz), measured at the upper neck load cell, shall not exceed 2520 N (566 lbf) at any time.

(d) Unless otherwise indicated, instrumentation for data acquisition, data channel frequency class, and moment calculations are the same as given in 49 CFR Part 572 Subpart O 5th percentile female test dummy.

S26 *Procedure for low risk deployment tests of driver air bag.*

S26.1 Each vehicle that is certified as complying with S25.3 shall meet the requirements of S25.3 and S25.4 with the 49 CFR Part 572 Subpart O 5th percentile adult female dummy in both of the following positions: Driver position 1 (S26.2) and Driver position 2 (S26.3).

S26.2 *Driver position 1 (chin on module).*

S26.2.1 Adjust the steering controls so that the steering wheel hub is at the geometric center of the locus it describes when it is moved through its full range of driving positions. If there is no setting at the geometric center, position it one setting lower than the geometric center. Set the rotation of the steering wheel so that the vehicle wheels are pointed straight ahead.

S26.2.2 Locate the vertical plane parallel to the vehicle longitudinal axis which passes through the geometric center of the opening through which the driver air bag deploys into the occupant compartment. This is referred to as ''Plane E.''

S26.2.3 Place the seat in the full rearward seating position. If adjustable in

the vertical direction, place the seat in the mid-height position. If the seat cushion adjusts fore and aft, independent of the entire seat, adjust the seat cushion to the full rearward position. If the seat back is adjustable, place the seat back at the manufacturer's nominal design seat back angle for a 50th percentile adult male as specified in S8.1.3. If the seat cushion contains an independent seat cushion angle adjustment mechanism, adjust the seat cushion angle to the middle of the range of seat cushion angles. Position any adjustable parts of the seat that provide additional support so that they are in the lowest or most open adjustment position. Position an adjustable head restrain in the lowest position.

S26.2.4 Place the dummy in the driver's seat such that:

S26.2.4.1 The midsagittal plane is coincident with Plane E.

S26.2.4.2 The legs are perpendicular to the floor pan and the back of the legs are in contact with the seat cushion. The legs may be adjusted if necessary to achieve the final head position.

S26.2.4.3 The dummy's thorax instrument cavity rear face is 6 degrees forward (toward the front of the vehicle) of the steering wheel angle (i.e., if the steering wheel angle is 25 degrees from vertical, the thorax instrument cavity rear face angle is 31 degrees).

S26.2.4.4 The initial transverse distance between the longitudinal centerlines at the front of the dummy's knees is 160 to 170 mm (6.3 to 6.7 in), with the thighs and legs of the dummy in vertical planes.

S26.2.4.5 The upper arms are parallel to the torso and the hands are in contact with the thighs.

S26.2.5 Maintaining the spine angle, slide the dummy forward until the head/torso contacts the steering wheel.

S26.2.6 While maintaining the spine angle, adjust the height of the dummy so that a point on the chin 40 mm below the center of the mouth (chin point) is in the same horizontal plane as the geometric center of the opening through which the air bag deploys into the occupant compartment. If the seat prevents the chin point from being in the same horizontal plane, adjust the dummy height to as close to the prescribed position as possible.

S26.2.7 If necessary, material with a maximum breaking strength of 311 N (70 lb) and spacer blocks may be used to support the dummy in position. The material should support the torso rather than the head. Support the dummy so that there is minimum interference with the full rotational and translational freedom for the upper torso of the dummy and the material does not interfere with the air bag.

S26.3 *Driver position 2 (chin on rim).*

S26.3.1 Place the seat in the full rearward seating position. If adjustable in the vertical direction, place the seat in the mid-height position. If the seat cushion adjusts fore and aft, independent of the entire seat, adjust the seat cushion to the full rearward position. If the seatback is adjustable, place the seat back at the manufacturer's nominal design seat back angle for a 50th percentile adult male as specified in S8.1.3. If the seat cushion contains an independent seat cushion angle adjustment mechanism, adjust the seat cushion angle to the middle of the range of seat cushion angles. Position any adjustable parts of the seat that provide additional support so that they are in the lowest or most open adjustment position. Position an adjustable head restraint in the lowest position.

S26.3.2 Adjust the steering controls so that the steering wheel hub is at the geometric center of the locus it describes when it is moved through its full range of driving positions. If there is no setting at the geometric center, position it one setting lower than the geometric center. Set the rotation of the steering wheel so that the vehicle wheels are pointed straight ahead.

S26.3.3 Locate the vertical plane parallel to the vehicle longitudinal axis which passes through the geometric center of the opening through which the driver air bag deploys into the occupant compartment. This is referred to as ''Plane E.''

S26.3.4 Place the dummy in the driver's seat position such that:

S26.3.4.1 The midsagittal plane is coincident with Plane E.

S26.3.4.2 The legs are perpendicular to the floor pan and the back of the

legs are in contact with the seat cushion. The legs may be adjusted if necessary to achieve the final head position.

S26.3.4.3 The dummy's thorax instrument cavity rear face is 6 degrees forward (toward the front of the vehicle) of the steering wheel angle (i.e., if the steering wheel angle is 25 degrees from vertical, the thorax instrument cavity rear face angle is 31 degrees).

S26.3.4.4 The initial transverse distance between the longitudinal centerlines at the front of the dummy's knees is 160 to 170 mm (6.3 to 6.7 in), with the thighs and legs of the dummy in vertical planes.

S26.3.4.5 The upper arms are parallel to the torso and the hands are in contact with the thighs.

S26.3.5 Maintaining the spine angle, slide the dummy forward until the head/torso contacts the steering wheel.

S26.3.6 While maintaining the spine angle, position the dummy so that a point on the chin 40 mm below the center of the mouth (chin point) is in contact with the rim of the uppermost portion of the steering wheel. If the dummy's head contacts the vehicle windshield or upper interior before the prescribed position can be obtained, lower the dummy until there is no more than 5 mm (0.2 in) clearance between the vehicle's windshield or upper interior, as applicable.

S26.3.7 If the steering wheel can be adjusted so that the chin point can be in contact with the rim of the uppermost portion of the steering wheel, adjust the steering wheel to that position and readjust the spine angle to coincide with the steering wheel angle. Position the dummy so that the chin point is in contact with the rim of the uppermost portion of the steering wheel.

S26.3.8 If necessary, material with a maximum breaking strength of 311 N (70 lb) and spacer blocks may be used to support the dummy in position. The material should support the torso rather than the head. Support the dummy so that there is minimum interference with the full rotational and translational freedom for the upper torso of the dummy and the material does not interfere with the air bag.

S26.4 Deploy the left front outboard frontal air bag system. If the air bag system contains a multistage inflator, the vehicle shall be able to comply with the injury criteria at any stage or combination of stages or time delay between successive stages that could occur in a rigid barrier crash at speeds up to 26 km/h (16 mph) under the test procedure specified in S22.5.

S27 *Option for dynamic automatic suppression system that suppresses the air bag when an occupant is out-of-position.*

S27.1 *Availability of option.* This option is available for either air bag, singly or in conjunction, subject to the requirements of S27, if:

(a) A petition for rulemaking to establish dynamic automatic suppression system test procedures is submitted pursuant to Subpart B of Part 552 and a test procedure applicable to the vehicle is added to S28 pursuant to the procedures specified by that subpart, or

(b) A test procedure applicable to the vehicle is otherwise added to S28.

S27.2 *Definitions.* For purposes of S27 and S28, the following definitions apply:

Automatic suppression zone or ASZ means a three-dimensional zone adjacent to the air bag cover, specified by the vehicle manufacturer, where the deployment of the air bag will be suppressed by the DASS if a vehicle occupant enters the zone under specified conditions.

Dynamic automatic suppression system or DASS means a portion of an air bag system that automatically controls whether or not the air bag deploys during a crash by:

(1) Sensing the location of an occupant, moving or still, in relation to the air bag;

(2) Interpreting the occupant characteristics and location information to determine whether or not the air bag should deploy; and

(3) Activating or suppressing the air bag system based on the interpretation of occupant characteristics and location information.

S27.3 *Requirements.* Each vehicle shall, at each applicable front outboard designated seating position, when tested under the conditions of S28 of this standard, comply with the requirements specified in S27.4 through S27.6.

S27.4 Each vehicle shall be equipped with a DASS.

S27.5 *Static test requirement (low risk deployment for occupants outside the ASZ).*

S27.5.1 *Driver (49 CFR Part 572 Subpart O 5th percentile female dummy).* Each vehicle shall meet the injury criteria specified in S15.3 of this standard when the driver air bag is deployed in accordance with the procedures specified in S28.1.

S27.5.2 *Passenger (49 CFR Part 572 Subpart P 3-year-old child dummy and 49 CFR Part 572 Subpart N 6-year-old child dummy).* Each vehicle shall meet the injury criteria specified in S21.5 and S23.5, as appropriate, when the passenger air bag is deployed in accordance with the procedures specified in S28.2.

S27.6 *Dynamic test requirement (suppression of air bag for occupants inside the ASZ).*

S27.6.1 *Driver.* The DASS shall suppress the driver air bag before the head, neck, or torso of the specified test device enters the ASZ when the vehicle is tested under the procedures specified in S28.3.

S27.6.2 *Passenger.* The DASS shall suppress the passenger air bag before head, neck, or torso of the specified test device enters the ASZ when the vehicle is tested under the procedures specified in S28.4.

S28 *Test procedure for S27 of this standard.* [Reserved]

S28.1 *Driver suppression zone verification test (49 CFR Part 572 Subpart O 5th percentile female dummy).* [Reserved]

S28.2 *Passenger suppression zone verification test (49 CFR Part 572 Subpart P 3-year-old child dummy and 49 CFR Part 572 Subpart N 6-year-old child dummies).* [Reserved]

S28.3 *Driver dynamic test procedure for DASS requirements.* [Reserved]

S28.4 *Passenger dynamic test procedure for DASS requirements.* [Reserved]

S29 *Manufacturer option to certify vehicles to certain static suppression test requirements using human beings rather than test dummies.*

S29.1 At the option of the manufacturer, instead of using test dummies in conducting the tests for the following automatic suppression and occupant recognition parts of the low risk deployment test requirements, human beings may be used as specified. If human beings are used, they shall assume, to the extent possible, the final physical position specified for the corresponding dummies for each test.

(a) If a manufacturer decides to certify a vehicle using a human being for a test of the passenger automatic suppression, it shall use humans for the entire series of tests, e.g., 3-year-old children for each test of the system involving 3-year-old test dummies. If a manufacturer decides to certify a vehicle using a test dummy for a test of the system, it shall use test dummies for the entire series of tests, e.g., a Hybrid III 3-year-old child dummy for each test of the system involving 3-year-old child test dummies.

(b) For S19.2, instead of using the 49 CFR Part 572 Subpart R 12-month-old child dummy, a human child who weighs between 8.2 and 9.1 kg (18 and 20 lb), and who is between 61 and 66 cm (24 and 26 in) tall may be used.

(c) For S19.2, instead of using the 49 CFR Part 572 Subpart K newborn infant dummy, a human child who weighs between 8.2 and 9.1 kg (18 and 20 lb), and who is between 61 and 66 cm (24 and 26 in) tall may be used.

(d) For S21.2 and S21.5.1, instead of using the 49 CFR Part 572 Subpart P 3-year-old child dummy, a human child who weighs between 13.4 and 18 kg (29.5 and 39.5 lb), and who is between 89 and 99 cm (35 and 39 in) tall may be used.

(e) For S23.2 and S23.5.1, instead of using the 49 CFR Part 572 Subpart N 6-year-old child dummy, a human child who weighs between 21 and 25.6 kg (46.5 and 56.5 lb), and who is between 114 and 124.5 cm (45 and 49 in) tall may be used.

(f) For S19.2, S21.2, and S23.2, instead of using the 49 CFR Part 572 Subpart O 5th percentile adult female test dummy, a female who weighs between 46.7 and 51.25 kg (103 and 113 lb), and who is between 139.7 and 150 cm (55 and 59 in) tall may be used.

S29.2 Human beings shall be dressed in a cotton T-shirt, full length cotton trousers, and sneakers. Specified weights and heights include clothing.

S29.3 A manufacturer exercising this option shall upon request:

(a) Provide NHTSA with a method to deactivate the air bag during compliance testing under S20.2, S20.3, S22.2, S22.3, S24.2, and S24.3, and identify any parts or equipment necessary for deactivation; such assurance may be made by removing the air bag; and

(b) Provide NHTSA with a method to assure that the same test results would be obtained if the air bag were not deactivated.

FIGURES TO §571.208

Figure 1. [Reserved]

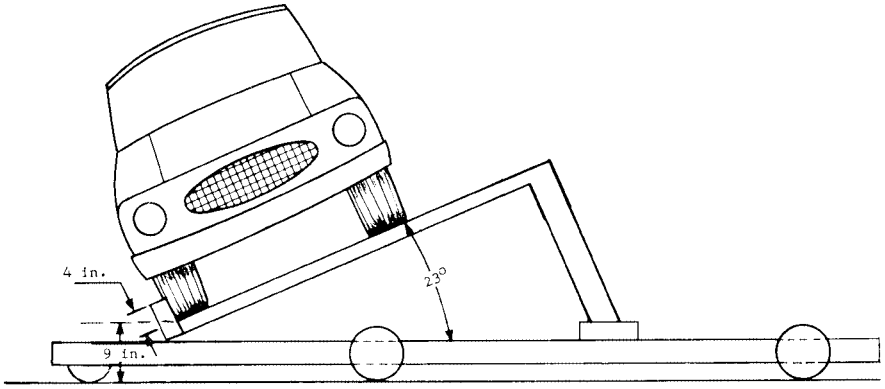

FIGURE 2 - TYPICAL DEVICE FOR ROLLOVER TEST

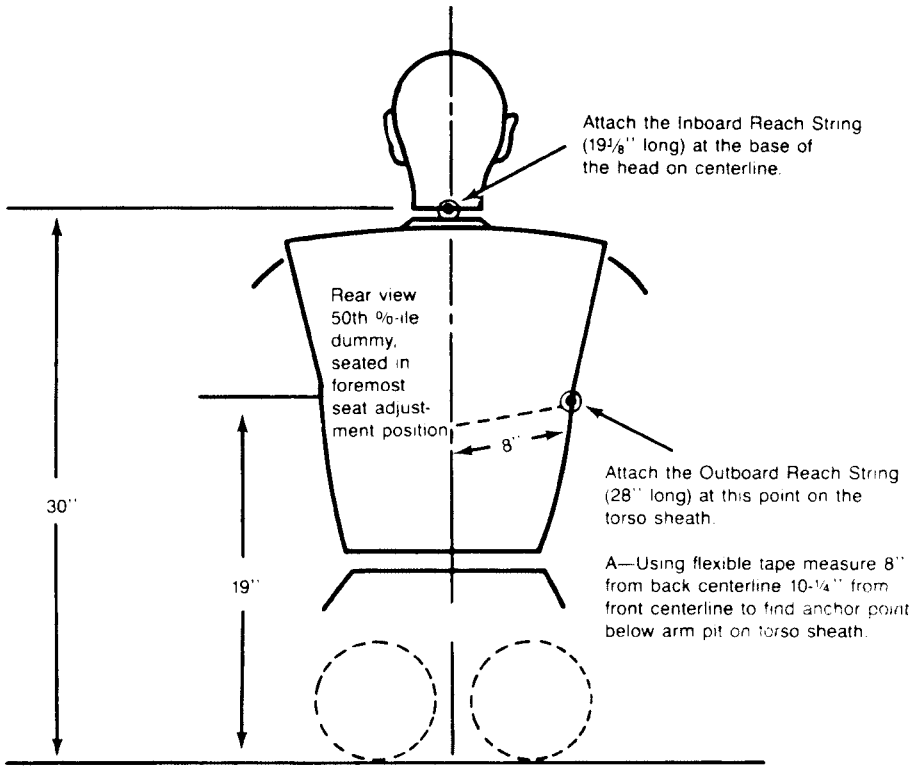

Figure 3. Location of Anchoring Points for Latchplate Reach Limiting Chains or Strings to Test for Latchplate Accessibility Using Subpart E Test Device

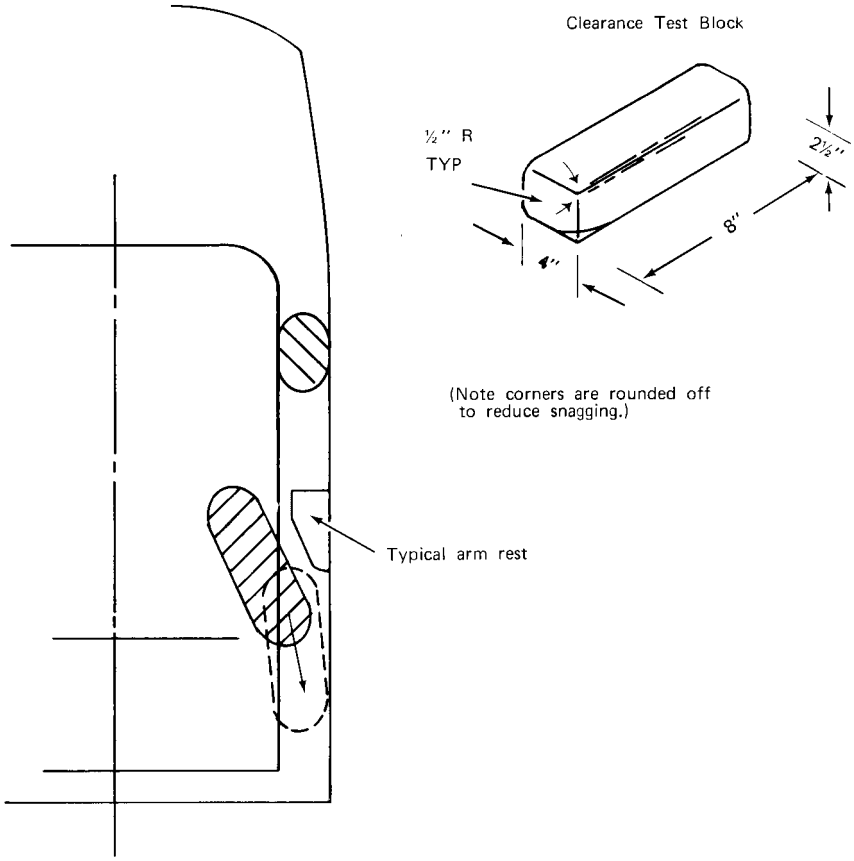

Figure 4—USE OF CLEARANCE TEST BLOCK TO DETERMINE HAND/ARM ACCESS

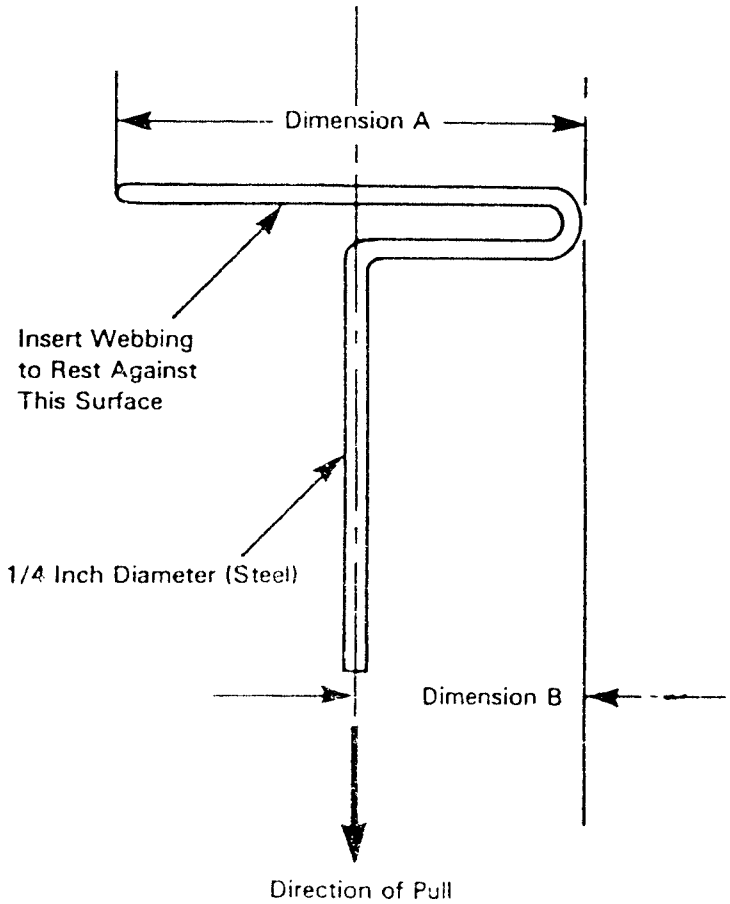

Dimension A - Width of Webbing Plus 1/2 Inch

Dimension B - 1/2 of Dimension A

Figure 5. - Webbing Tension Pull Device

SLED PULSE WITH MAXIMUM AND MINIMUM CORRIDORS

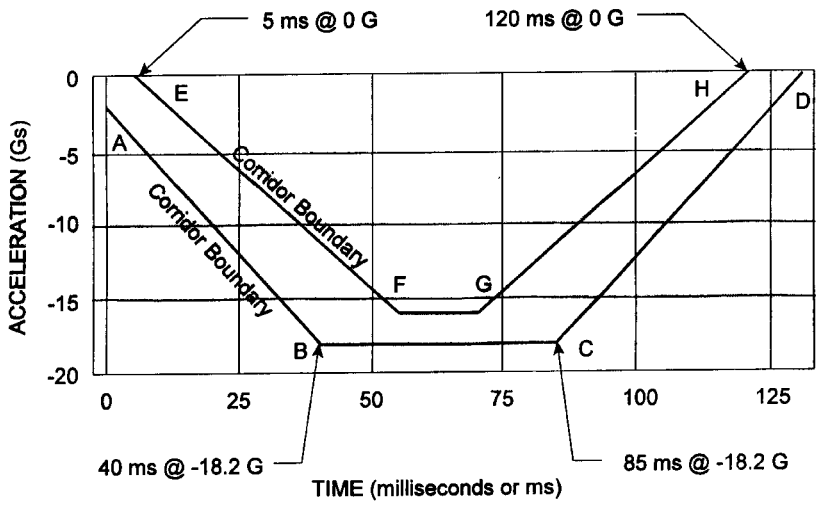

Sled pulse for delta V = 30(+0,-2) mph. The Time Zero for the test is defined by the point when the sled acceleration achieves -0.5 G's.

SLED PULSE AND COORDINATES

REFERENCE POINT	t (ms)	ACCELERATION (G)
A	0	-2
B	40	-18.2
C	85	-18.2
D	130	0
E	5	0
F	55	-16
G	70	-16
H	120	0.00

Figure 6 - Sled Pulse and Coordinates

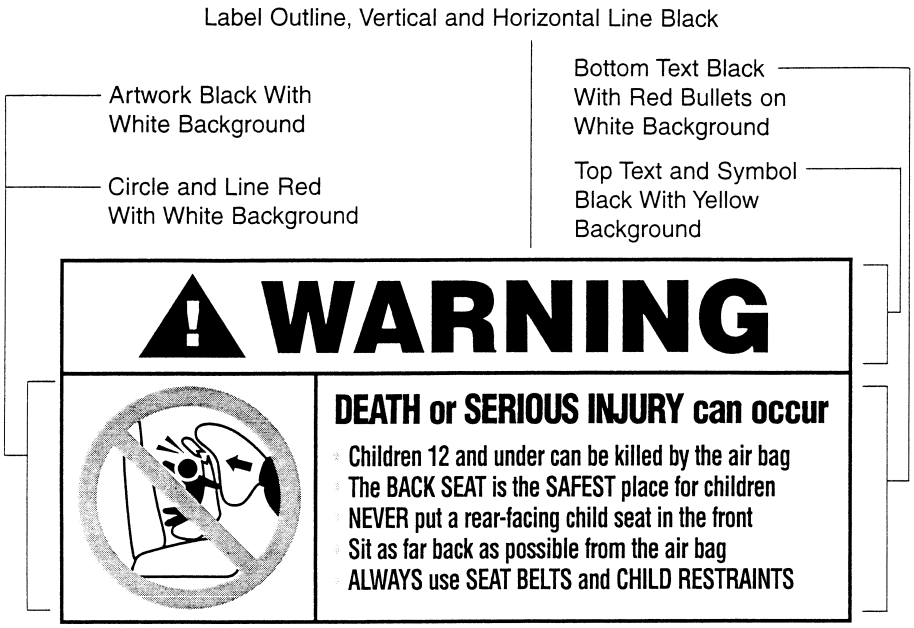

Figure 6a. Sun Visor Label Visible When Visor is in Down Position.

Figure 6b. Sun Visor Label Visible When Visor is in Down Position.

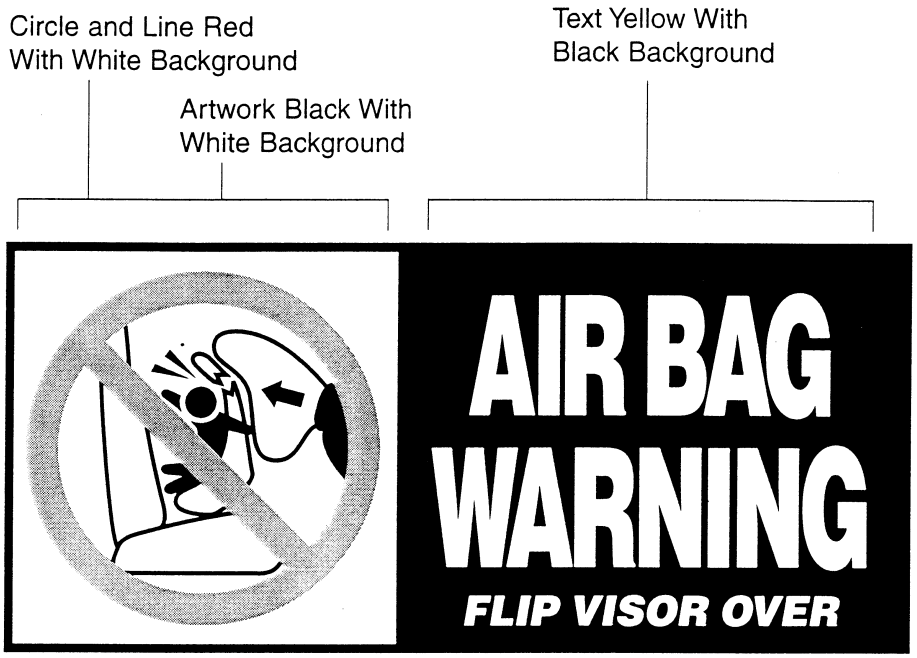

Figure 6c. Sun Visor Label Visible When Visor is in Up Position.

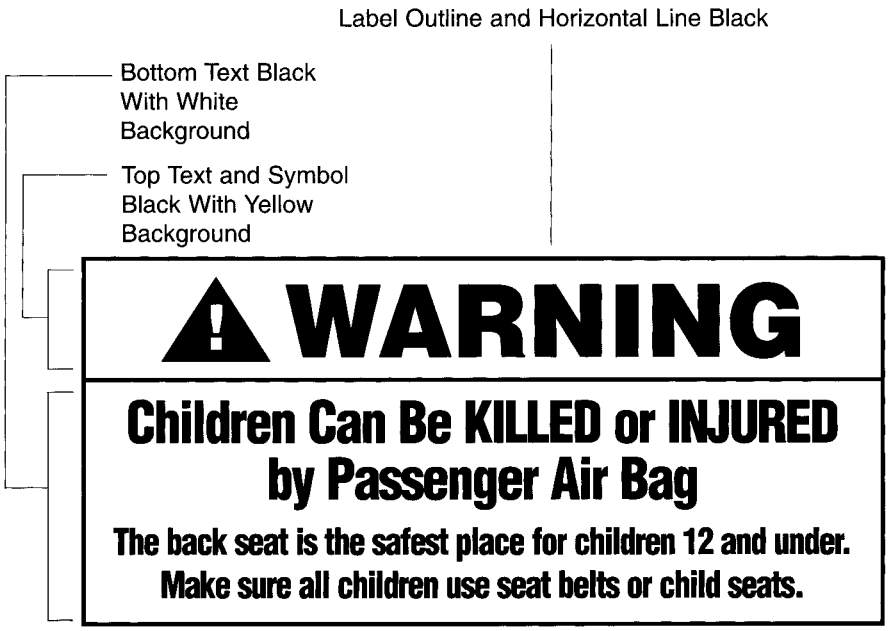

Figure 7. Removable Label on Dash.

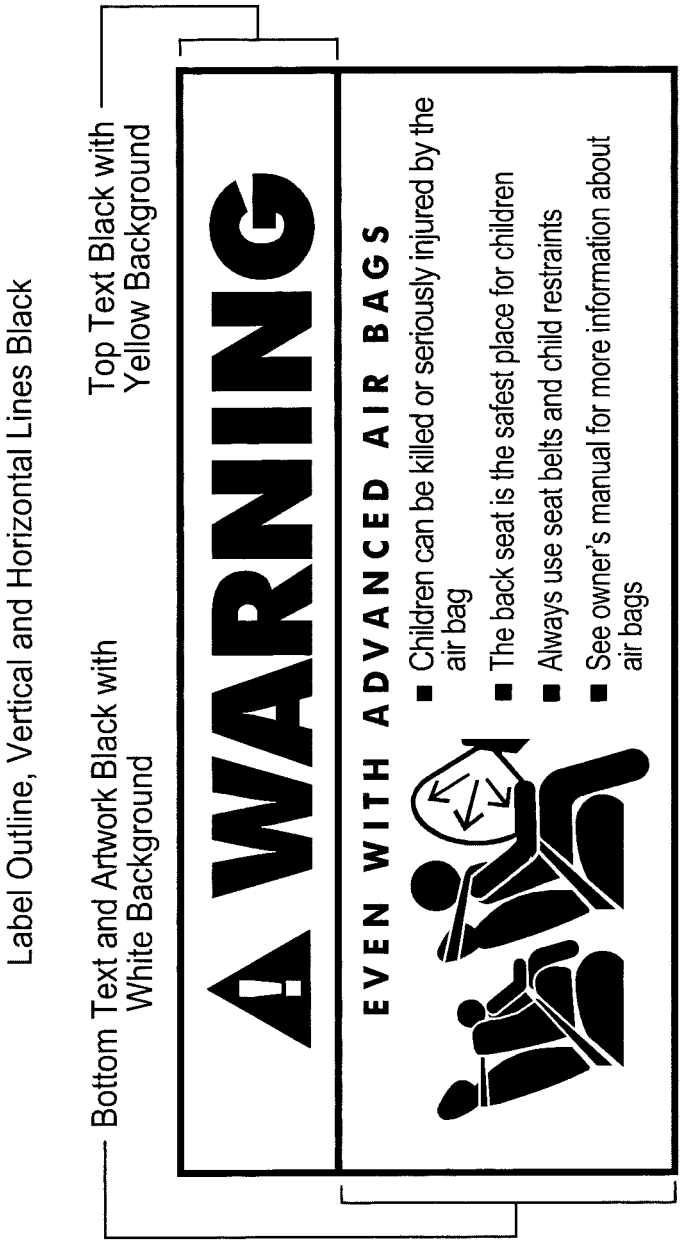

Figure 8. Sun Visor Label Visible when Visor is in Down Position.

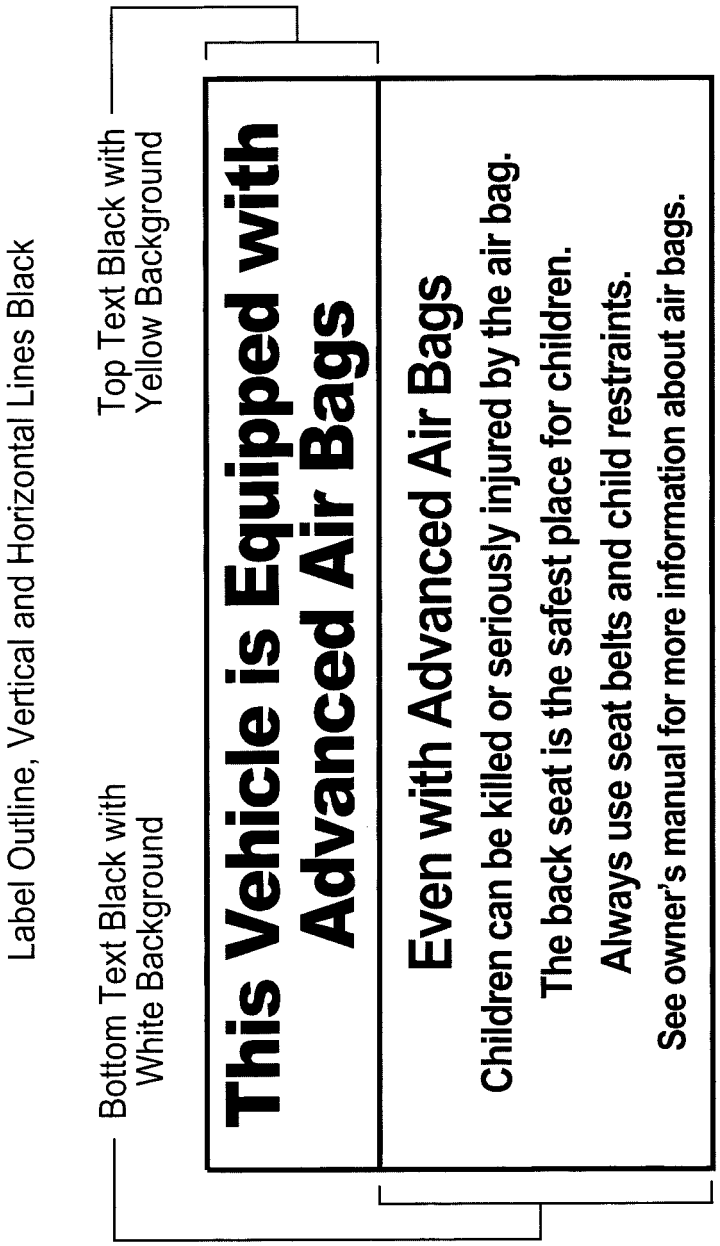

Figure 9. Removable Label on Dash.

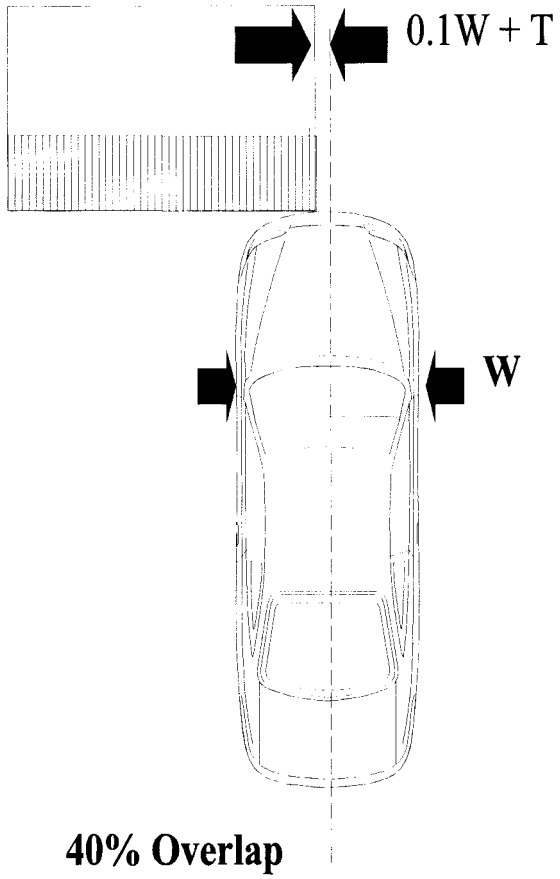

Legend

---- Longitudinal Centerline of Vehicle

W Vehicle Width

T Tolerance

Figure 10 Configuration for Frontal Offset Deformable Barrier Test

APPENDIX A TO § 571.208—SELECTION OF CHILD RESTRAINT SYSTEMS

A. The following car bed, manufactured on or after December 1, 1999, may be used by the National Highway Traffic Safety Administration to test the suppression system of a vehicle that has been certified as being in compliance with 49 CFR 571.208 S19:

Cosco Dream Ride 02–719

B. Any of the following rear facing child restraint systems, manufactured on or after

December 1, 1999, may be used by the National Highway Traffic Safety Administration to test the suppression system of a vehicle that has been certified as being in compliance with 49 CFR 571.208 S19. When the restraint system comes equipped with a removable base, the test may be run either with the base attached or without the base.

Britax Handle with Care 191
Century Assura 4553
Century Avanta SE 41530
Century Smart Fit 4543
Cosco Arriva 02727
Cosco Opus 35 02603
Evenflo Discovery Adjust Right 212
Evenflo First Choice 204
Evenflo On My Way Position Right V 282
Graco Infant 8457

C. Any of the following forward-facing convertible child restraint systems, manufactured on or after December 1, 1999, may be used by the National Highway Traffic Safety Administration to test the suppression system of a vehicle that has been certified as being in compliance with 49 CFR 571.208 S19, or S21:

Britax Roundabout 161
Century Encore 4612
Century STE 1000 4416
Cosco Olympian 02803
Cosco Touriva 02519
Evenflo Horizon V 425
Evenflo Medallion 254

D. Any of the following forward-facing toddler/belt positioning booster systems, manufactured on or after December 1, 1999, may be used by the National Highway Traffic Safety Administration as test devices to test the suppression system of a vehicle that has been certified as being in compliance with 49 CFR 571.208 S21 or S23:

Britax Roadster 9004
Century Next Step 4920
Cosco High Back Booster 02–442
Evenflo Right Fit 245

[36 FR 22902, Dec. 2, 1971]

EDITORIAL NOTE: For FEDERAL REGISTER citations affecting §571.208, see the List of CFR Sections Affected, which appears in the Finding Aids section of the printed volume and on GPO Access.

§571.209 Standard No. 209; Seat belt assemblies.

S1. *Purpose and scope*. This standard specifies requirements for seat belt assemblies.

S2. *Application*. This standard applies to seat belt assemblies for use in passenger cars, multipurpose passenger vehicles, trucks, and buses.

S3. *Definitions*. *Adjustment hardware* means any or all hardware designed for adjusting the size of a seat belt assembly to fit the user, including such hardware that may be integral with a buckle, attachment hardware, or retractor.

Attachment hardware means any or all hardware designed for securing the webbing of a seat belt assembly to a motor vehicle.

Automatic-locking retractor means a retractor incorporating adjustment hardware by means of a positive self-locking mechanism which is capable when locked of withstanding restraint forces.

Buckle means a quick release connector which fastens a person in a seat belt assembly.

Emergency-locking retractor means a retractor incorporating adjustment hardware by means of a locking mechanism that is activated by vehicle acceleration, webbing movement relative to the vehicle, or other automatic action during an emergency and is capable when locked of withstanding restraint forces.

Hardware means any metal or rigid plastic part of a seat belt assembly.

Load-limiter means a seat belt assembly component or feature that controls tension on the seat belt to modulate the forces that are imparted to occupants restrained by the belt assembly during a crash.

Nonlocking retractor means a retractor from which the webbing is extended to essentially its full length by a small external force, which provides no adjustment for assembly length, and which may or may not be capable of sustaining restraint forces at maximum webbing extension.

Pelvic restraint means a seat belt assembly or portion thereof intended to restrain movement of the pelvis.

Retractor means a device for storing part or all of the webbing in a seat belt assembly.

Seat back retainer means the portion of some seat belt assemblies designed to restrict forward movement of a seat back.

Seat belt assembly means any strap, webbing, or similar device designed to secure a person in a motor vehicle in order to mitigate the results of any accident, including all necessary buckles and other fasteners, and all hardware

designed for installing such seat belt assembly in a motor vehicle.

Strap means a narrow nonwoven material used in a seat belt assembly in place of webbing.

Type 1 seat belt assembly is a lap belt for pelvic restraint.

Type 2 seat belt assembly is a combination of pelvic and upper torso restraints.

Type 2a shoulder belt is an upper torso restraint for use only in conjunction with a lap belt as a Type 2 seat belt assembly.

Upper torso restraint means a portion of a seat belt assembly intended to restrain movement of the chest and shoulder regions.

Webbing means a narrow fabric woven with continuous filling yarns and finished selvages.

S4. *Requirements.*

S4.1 (a) *Single occupancy.* A seat belt assembly shall be designed for use by one, and only one, person at any one time.

(b) [Reserved]

(c) *Upper torso restraint.* A Type 2 seat belt assembly shall provide upper torso restraint without shifting the pelvic restraint into the abdominal region. An upper torso restraint shall be designed to minimize vertical forces on the shoulders and spine. Hardware for upper torso restraint shall be so designed and located in the seat belt assembly that the possibility of injury to the occupant is minimized.

A Type 2a shoulder belt shall comply with applicable requirements for a Type 2 seat belt assembly in S4.1 to S4.4, inclusive.

(d) *Hardware.* All hardware parts which contact under normal usage a person, clothing, or webbing shall be free from burrs and sharp edges.

(e) *Release.* A Type 1 or Type 2 seat belt assembly shall be provided with a buckle or buckles readily accessible to the occupant to permit his easy and rapid removal from the assembly. Buckle release mechanism shall be designed to minimize the possibility of accidental release. A buckle with release mechanism in the latched position shall have only one opening in which the tongue can be inserted on the end of the buckle designed to receive and latch the tongue.

(f) *Attachment hardware.* A seat belt assembly shall include all hardware necessary for installation in a motor vehicle in accordance with Society of Automotive Engineers Recommended Practice J800c, ''Motor Vehicle Seat Belt Installation,'' November 1973. However, seat belt assemblies designed for installation in motor vehicles equipped with seat belt assembly anchorages that do not require anchorage nuts, plates, or washers, need not have such hardware, but shall have 7/16–20 UNF–2A or ½–13UNC–2A attachment bolts or equivalent metric hardware. The hardware shall be designed to prevent attachment bolts and other parts from becoming disengaged from the vehicle while in service. Reinforcing plates or washers furnished for universal floor, installations shall be of steel, free from burrs and sharp edges on the peripheral edges adjacent to the vehicle, at least 1.5 mm in thickness and at least 2580 mm^2 in projected area. The distance between any edge of the plate and the edge of the bolt hole shall be at least 15 mm. Any corner shall be rounded to a radius of not less than 6 mm or cut so that no corner angle is less than 135° and no side is less than 6 mm in length.

(g) *Adjustment.* (1) A Type 1 or Type 2 seat belt assembly shall be capable of adjustment to fit occupants whose dimensions and weight range from those of a 5th-percentile adult female to those of a 95th-percentile adult male. The seat belt assembly shall have either an automatic-locking retractor, an emergency-locking retractor, or an adjusting device that is within the reach of the occupant.

(2) A Type 1 or Type 2 seat belt assembly for use in a vehicle having seats that are adjustable shall conform to the requirements of S4.1(g)(1) regardless of seat position. However, if a seat has a back that is separately adjustable, the requirements of S4.1(g)(1) need be met only with the seat back in the manufacturer's nominal design riding position.

(3) The adult occupants referred to in S4.1(g)(1) shall have the following measurements:

	5th percen- tile adult female	95th percentile adult male
Weight	46.3 kg	97.5 kg.
Erect sitting height	785 mm	965 mm.
Hip breadth (sitting)	325 mm	419 mm.
Hip circumference (sitting).	925 mm	1199 mm.
Waist circumference (sitting).	599 mm	1080 mm.
Chest depth	190 mm	267 mm.
Chest circumference:		
Nipple	775 mm	1130 mm.
Upper	757 mm	1130 mm.
Lower	676 mm	1130 mm.

(h) *Webbing*. The ends of webbing in a seat belt assembly shall be protected or treated to prevent raveling. The end of webbing in a seat belt assembly having a metal-to-metal buckle that is used by the occupant to adjust the size of the assembly shall not pull out of the adjustment hardware at maximum size adjustment. Provision shall be made for essentially unimpeded movement of webbing routed between a seat back and seat cushion and attached to a retractor located behind the seat.

(i) *Strap*. A strap used in a seat belt assembly to sustain restraint forces shall comply with the requirements for webbing in S4.2, and if the strap is made from a rigid material, it shall comply with applicable requirements in S4.2, S4.3, and S4.4.

(j) *Marking*. Each seat belt assembly shall be permanently and legibly marked or labeled with year of manufacture, model, and name or trademark of manufacturer or distributor, or of importer if manufactured outside the United States. A model shall consist of a single combination of webbing having a specific type of fiber weave and construction, and hardware having a specific design. Webbings of various colors may be included under the same model, but webbing of each color shall comply with the requirements for webbing in S4.2.

(k) *Installation instructions*. A seat belt assembly, other than a seat belt assembly installed in a motor vehicle by an automobile manufacturer, shall be accompanied by an instruction sheet providing sufficient information for installing the assembly in a motor vehicle. The installation instructions shall state whether the assembly is for universal installation or for installation only in specifically stated motor vehicles, and shall include at least those items specified in SAE Recommended Practice J800c, ''Motor Vehicle Seat Belt Installations,'' November 1973. If the assembly is for use only in specifically stated motor vehicles, the assembly shall either be permanently and legibly marked or labeled with the following statement, or the instruction sheet shall include the following statement:

This seat belt assembly is for use only in [insert specific seating position(s), e.g., ''front right''] in [insert specific vehicle make(s) and model(s)].

(l) *Usage and maintenance instructions*. A seat belt assembly or retractor shall be accompanied by written instructions for the proper use of the assembly, stressing particularly the importance of wearing the assembly snugly and properly located on the body, and on the maintenance f the assembly and periodic inspection of all components. The instructions shall show the proper manner of threading webbing in the hardware of seat belt assemblies in which the webbing is not permanently fastened. Instructions for a nonlocking retractor shall include a caution that the webbing must be fully extended from the retractor during use of the seat belt assembly unless the retractor is attached to the free end of webbing which is not subjected to any tension during restraint of an occupant by the assembly. Instructions for Type 2a shoulder belt shall include a warning that the shoulder belt is not to be used without a lap belt.

(m) *Workmanship*. Seat belt assemblies shall have good workmanship in accordance with good commercial practice.

S4.2 *Requirements for webbing*.

(a) *Width*. The width of the webbing in a seat belt assembly shall be not less than 46 mm, except for portions that do not touch a 95th percentile adult male with the seat in any adjustment position and the seat back in the manufacturer's nominal design riding position when measured under the conditions prescribed in S5.1(a).

(b) *Breaking strength*. The webbing in a seat belt assembly shall have not less than the following breaking strength when tested by the procedures specified in S5.1(b): Type 1 seat belt assembly—26,689 N; Type 2 seat belt assembly—

22,241 N for webbing in pelvic restraint and 17,793 N for webbing in upper torso restraint.

(c) *Elongation.* Except as provided in S4.5, the webbing in a seat belt assembly shall not extend to more than the following elongation when subjected to the specified forces in accordance with the procedure specified in S5.1(c): Type 1 seat belt assembly—20 percent at 11,120 N; Type 2 seat belt assembly 30 percent at 11,120 N for webbing in pelvic restraint and 40 percent at 11,120 N for webbing in upper torso restraint.

(d) *Resistance to abrasion.* The webbing of a seat belt assembly, after being subjected to abrasion as specified in S5.1(d) or S5.3(c), shall have a breaking strength of not less than 75 percent of the breaking strength listed in S4.2(b) for that type of belt assembly.

(e) *Resistance to light.* The webbing in a seat belt assembly after exposure to the light of a carbon arc and tested by the procedure specified in S5.1(e) shall have a breaking strength not less than 60 percent of the strength before exposure to the carbon arc and shall have a color retention not less than No. 2 on the Geometric Gray Scale published by the American Association of Textile Chemists and Colorists, Post Office Box 886, Durham, NC.

(f) *Resistance to micro-organisms.* The webbing in a seat belt assembly after being subjected to micro-organisms and tested by the procedures specified in S5.1(f) shall have a breaking strength not less than 85 percent of the strength before subjection to micro-organisms.

S4.3 *Requirements for hardware.*

(a) *Corrosion resistance.* (1) Attachment hardware of a seat belt assembly after being subjected to the conditions specified in S5.2(a) shall be free of ferrous corrosion on significant surfaces except for permissible ferrous corrosion at peripheral edges or edges of holes on underfloor reinforcing plates and washers. Alternatively, such hardware at or near the floor shall be protected against corrosion by at least an electrodeposited coating of nickel, or copper and nickel with at least a service condition number of SC2, and other attachment hardware shall be protected by an electrodeposited coating of nickel, or copper and nickel with a service condition number of SC1, in accordance with American Society for Testing and Materials B456–79, ''Standard Specification for Electrodeposited Coatings of Copper Plus Nickel Plus Chromium and Nickel Plus Chromium,'' but such hardware shall not be racked for electroplating in locations subjected to maximum stress.

(2) Surfaces of buckles, retractors and metallic parts, other than attachment hardware, of a seat belt assembly after subjection to the conditions specified in S5.2(a) shall be free of ferrous or nonferrous corrosion which may be transferred, either directly or by means of the webbing, to the occupant or his clothing when the assembly is worn. After test, buckles shall conform to applicable requirements in paragraphs (d) to (g) of this section.

(b) *Temperature resistance.* Plastic or other nonmetallic hardware parts of a seat belt assembly when subjected to the conditions specified in S5.2(b) shall not warp or otherwise deteriorate to cause the assembly to operate improperly or fail to comply with applicable requirements in this section and S4.4.

(c) *Attachment hardware.* (1) Eye bolts, shoulder bolts, or other bolt used to secure the pelvic restraint of seat belt assembly to a motor vehicle shall withstand a force of 40,034 N when tested by the procedure specified in S5.2(c)(1), except that attachment bolts of a seat belt assembly designed for installation in specific models of motor vehicles in which the ends of two or more seat belt assemblies cannot be attached to the vehicle by a single bolt shall have breaking strength of not less than 22,241 N.

(2) Other attachment hardware designed to receive the ends of two seat belt assemblies shall withstand a tensile force of at least 26,689 N without fracture of a section when tested by the procedure specified in S5.2(c)(2).

(3) A seat belt assembly having single attachment hooks of the quick-disconnect type for connecting webbing to an eye bolt shall be provided with a retaining latch or keeper which shall not move more than 2 mm in either the vertical or horizontal direction when tested by the procedure specified in S5.2(c)(3).

(d) *Buckle release.* (1) The buckle of a Type 1 or Type 2 seat belt assembly shall release when a force of not more than 133 N is applied.

(2) A buckle designed for pushbutton application of buckle release force shall have a minimum area of 452 mm^2 with a minimum linear dimension of 10 mm for applying the release force, or a buckle designed for lever application of buckle release force shall permit the insertion of a cylinder 10 mm in diameter and 38 mm in length to at least the midpoint of the cylinder along the cylinder's entire length in the actuation portion of the buckle release. A buckle having other design for release shall have adequate access for two or more fingers to actuate release.

(3) The buckle of a Type 1 or Type 2 seat belt assembly shall not release under a compressive force of 1779 N applied as prescribed in paragraph S5.2(d)(3). The buckle shall be operable and shall meet the applicable requirement of paragraph S4.4 after the compressive force has been removed.

(e) *Adjustment force.* The force required to decrease the size of a seat belt assembly shall not exceed 49 N when measured by the procedure specified in S5.2(e).

(f) *Tilt-lock adjustment.* The buckle of a seat belt assembly having tilt-lock adjustment shall lock the webbing when tested by the procedure specified in S5.2(f) at an angle of not less than 30 degrees between the base of the buckle and the anchor webbing.

(g) *Buckle latch.* The buckle latch of a seat belt assembly when tested by the procedure specified in S5.2(g) shall not fail, nor gall or wear to an extent that normal latching and unlatching is impaired, and a metal-to-metal buckle shall separate when in any position of partial engagement by a force of not more than 22 N.

(h) *Nonlocking retractor.* The webbing of a seat belt assembly shall extend from a nonlocking retractor within 6 mm of maximum length when a tension is applied as prescribed in S5.2(h). A nonlocking retractor on upper torso restraint shall be attached to the nonadjustable end of the assembly, the reel of the retractor shall be easily visible to an occupant while wearing the assembly, and the maximum retraction force shall not exceed 5 N in any strap or webbing that contacts the shoulder when measured by the procedure specified in S5.2(h), unless the retractor is attached to the free end of webbing which is not subjected to any tension during restraint of an occupant by the assembly.

(i) *Automatic-locking retractor.* The webbing of a seat belt assembly equipped with an automatic locking retractor, when tested by the procedure specified in S5.2(i), shall not move more than 25 mm between locking positions of the retractor, and shall be retracted with a force under zero acceleration of not less than 3 N when attached to pelvic restraint, and not less that 2 N nor more than 5 N in any strap or webbing that contacts the shoulders of an occupant when the retractor is attached to upper torso restraint. An automatic locking retractor attached to upper torso restraint shall not increase the restraint on the occupant of the seat belt assembly during use in a vehicle traveling over rough roads as prescribed in S5.2(i).

(j) *Emergency-locking retractor.* An emergency-locking retractor of a Type 1 or Type 2 seat belt assembly, when tested in accordance with the procedures specified in paragraph S5.2(j)—

(1) Shall lock before the webbing extends 25 mm when the retractor is subjected to an acceleration of 7 m/s^2 (0.7 g);

(2) Shall not lock, if the retractor is sensitive to webbing withdrawal, before the webbing extends 51 mm when the retractor is subjected to an acceleration of 3 m/s^2 (0.3 g) or less.

(3) Shall not lock, if the retractor is sensitive to vehicle acceleration, when the retractor is rotated in any direction to any angle of 15° or less from its orientation in the vehicle;

(4) Shall exert a retractive force of at least 3 N under zero acceleration when attached only to the pelvic restraint;

(5) Shall exert a retractive force of not less than 1 N and not more than 5 N under zero acceleration when attached only to an upper torso restraint;

(6) Shall exert a retractive force of not less than 1 N and not more than 7

N under zero acceleration when attached to a strap or webbing that restrains both the upper torso and the pelvis.

(k) *Performance of retractor*. A retractor used on a seat belt assembly after subjection to the tests specified in S5.2(k) shall comply with applicable requirements in paragraphs (h) to (j) of this section and S4.4, except that the retraction force shall be not less than 50 percent of its original retraction force.

S4.4 *Requirements for assembly performance*.

(a) *Type I seat belt assembly*. Except as provided in S4.5, the complete seat belt assembly including webbing, straps, buckles, adjustment and attachment hardware, and retractors shall comply with the following requirements when tested by the procedures specified in S5.3(a):

(1) The assembly loop shall withstand a force of not less than 22,241 N; that is, each structural component of the assembly shall withstand a force of not less than 11,120 N.

(2) The assembly loop shall extend not more than 7 inches or 178 mm when subjected to a force of 22,241 N; that is, the length of the assembly between anchorages shall not increase more than 356 mm.

(3) Any webbing cut by the hardware during test shall have a breaking strength at the cut of not less than 18,683 N.

(4) Complete fracture through any solid section of metal attachment hardware shall not occur during test.

(b) *Type 2 seat belt assembly*. Except as provided in S4.5, the components of a Type 2 seat belt assembly including webbing, straps, buckles, adjustment and attachment hardware, and retractors shall comply with the following requirements when tested by the procedure specified in S5.3(b):

(1) The structural components in the pelvic restraint shall withstand a force of not less than 11,120 N.

(2) The structural components in the upper torso restraint shall withstand a force of not less than 6,672 N.

(3) The structural components in the assembly that are common to pelvic and upper torso restraints shall withstand a force of not less than 13,345 N.

(4) The length of the pelvic restraint between anchorages shall not increase more than 508 mm when subjected to a force of 11,120 N.

(5) The length of the upper torso restraint between anchorages shall not increase more than 508 mm when subjected to a force of 6,672 N.

(6) Any webbing cut by the hardware during test shall have a breaking strength of not less than 15,569 N at a cut in webbing of the pelvic restraint, or not less than 12,455 N at a cut in webbing of the upper torso restraint.

(7) Complete fracture through any solid section of metal attachment hardware shall not occur during test.

S4.5 *Load-limiter*. (a) A Type 1 or Type 2 seat belt assembly that includes a load-limiter is not required to comply with the elongation requirements of S4.2(c), S4.4(a)(2), S4.4(b)(4) or S4.4(b)(5).

(b) A seat belt assembly that includes a load limiter and that does not comply with the elongation requirements of this standard may be installed in motor vehicles at any designated seating position that is subject to the requirements of S5.1 of Standard No. 208 (§ 571.208).

S4.6 *Manual belts subject to crash protection requirements of Standard No. 208*.

(a)(1) A manual seat belt assembly, which is subject to the requirements of S5.1 of Standard No. 208 (49 CFR 571.208) by virtue of any provision of Standard No. 208 other than S4.1.2.1(c)(2) of that standard, does not have to meet the requirements of S4.2(a)–(f) and S4.4 of this standard.

(2) A manual seat belt assembly subject to the requirements of S5.1 of Standard No. 208 (49 CFR 571.208) by virtue of S4.1.2.1(c)(2) of Standard No. 208 does not have to meet the elongation requirements of S4.2(c), S4.4(a)(2), S4.4(b)(4), and S4.4(b)(5) of this standard.

S5. *Demonstration procedures*.

S5.1 *Webbing*—(a) *Width*. The width of webbing from three seat belt assemblies shall be measured after conditioning for at least 24 hours in an atmosphere having relative humidity between 48 and 67 percent and a temperature of 23° ±2 °C. The tension during measurement of width shall be not more than 22 N on webbing from a Type

1 seat belt assembly, and 9786 N ± 450 N on webbing from a Type 2 seat belt assembly. The width of webbing from a Type 2 seat belt assembly may be measured during the breaking strength test described in paragraph (b) of this section.

(b) *Breaking strength.* Webbing from three seat belt assemblies shall be conditioned in accordance with paragraph (a) of this section and tested for breaking strength in a testing machine of capacity verified to have an error of not more than one percent in the range of the breaking strength of the webbing in accordance with American Society for Testing and Materials E4–79 ''Standard Methods of Load Verification of Testing Machines.'' The machine shall be equipped with split drum grips illustrated in Figure 1, having a diameter between 51 and 102 mm. The rate of grip separation shall be between 51 and 102 mm per minute. The distance between the centers of the grips at the start of the test shall be between 102 and 254 mm. After placing the specimen in the grips, the webbing shall be stretched continuously at a uniform rate to failure. Each value shall be not less than the applicable breaking strength requirement in S4.2(b), but the median value shall be used for determining the retention of breaking strength in paragraphs (d), (e) and (f) of this section.

(c) *Elongation.* Elongation shall be measured during the breaking strength test described in paragraph (b) of this section by the following procedure: A preload between 196 N and 245 N shall be placed on the webbing mounted in the grips of the testing machine and the needle points of an extensometer, in which the points remain parallel during test, are inserted in the center of the specimen. Initially the points shall be set at a known distance apart between 102 and 203 mm. When the force on the webbing reaches the value specified in S4.2(c), the increase in separation of the points of the extensometer shall be measured and the percent elongation shall be calculated to the nearest 0.5 percent. Each value shall be not more than the appropriate elongation requirement in S4.2(c).

(d) *Resistance to abrasion.* The webbing from three seat belt assemblies shall be tested for resistance to abrasion by rubbing over the hexagon bar prescribed in Figure 2 in the following manner: The webbing shall be mounted in the apparatus shown schematically in Figure 2. One end of the webbing (A) shall be attached to a mass (B) of 2.35 kg ± .05 kg, except that a mass of 1.5 kg ± .05 kg shall be used for webbing in pelvic and upper torso restraints of a belt assembly used in a child restraint system. The webbing shall be passed over the two new abrading edges of the hexagon bar (C) and the other end attached to an oscillating drum (D) which has a stroke of 330 mm. Suitable guides shall be used to prevent movement of the webbing along the axis of hexagonal bar C. Drum D shall be oscillated for 5,000 strokes or 2,500 cycles at a rate of 60 ± 2 strokes per minute or 30 ± 1 cycles per minute. The abraded webbing shall be conditioned as prescribed in paragraph (a) of this section and tested for breaking strength by the procedure described in paragraph (b) of this section. The median values for the breaking strengths determined on abraded and unabraded specimens shall be used to calculate the percentage of breaking strength retained.

(e) *Resistance to light.* Webbing at least 508 mm in length from three seat belt assemblies shall be suspended vertically on the inside of the specimen track in a Type E carbon-arc light exposure apparatus described in Standard Practice for Generating Light-Exposure Apparatus (Carbon-Arc Type) With and Without Water for Exposure of Nonmetallic Materials, ASTM Designation: G23 81, published by the American Society for Testing and Materials, except that the filter used for 100 percent polyester yarns shall be chemically strengthened soda-lime glass with a transmittance of less than 5 percent for wave lengths equal to or less than 305 nanometers and 90 percent or greater transmittance for wave lengths of 375 to 800 nanometers. The apparatus shall be operated without water spray at an air temperature of 60° ± 2 °Celsius (°C) measured at a point 25 ± 5 mm outside the specimen rack and midway in height. The temperature sensing element shall be shielded from radiation. The specimens

shall be exposed to light from the carbon-arc for 100 hours and then conditioned as prescribed in paragraph (a) of this section. The colorfastness of the exposed and conditioned specimens shall be determined on the Geometric Gray Scale issued by the American Association of Textile Chemists and Colorists. The breaking strength of the specimens shall be determined by the procedure prescribed in paragraph (b) of this section. The median values for the breaking strengths determined on exposed and unexposed specimens shall be used to calculate the percentage of breaking strength retained.

(f) *Resistance to micro-organisms.* Webbing at least 508 millimeters (mm) in length from three seat belt assemblies shall first be preconditioned in accordance with Appendix A(1) and (2) of American Association of Textile Chemists and Colorists Test Method 381, ''Fungicides Evaluation on Textiles; Mildew and Rot Resistance of Textiles,'' and then subjected to Test I, ''Soil Burial Test'' of that test method. After soil-burial for a period of 2 weeks, the specimen shall be washed in water, dried and conditioned as prescribed in paragraph (a) of this section. The breaking strengths of the specimens shall be determined by the procedure prescribed in paragraph (b) of this section. The median values for the breaking strengths determined on exposed and unexposed specimens shall be used to calculate the percentage of breaking strength retained.

NOTE: This test shall not be required on webbing made from material which is inherently resistant to micro-organisms.

S5.2 *Hardware.*

(a) *Corrosion resistance.* Three seat belt assemblies shall be tested in accordance with American Society for Testing and Materials B11773, ''Standard Method of Salt Spray (Fog) Testing.'' Any surface coating or material not intended for permanent retention on the metal parts during service life shall be removed prior to preparation of the test specimens for testing. The period of test shall be 50 hours for all attachment hardware at or near the floor, consisting of two periods of 24 hours exposure to salt spray followed by 1 hour drying and 25 hours for all other hardware, consisting of one period of 24 hours exposure to salt spray followed by 1 hour drying. In the salt spray test chamber, the parts from the three assemblies shall be oriented differently, selecting those orientations most likely to develop corrosion on the larger areas. At the end of test, the seat belt assembly shall be washed thoroughly with water to remove the salt. After drying for at least 24 hours under standard laboratory conditions specified in S5.1(a) attachment hardware shall be examined for ferrous corrosion on significant surfaces, that is, all surfaces that can be contacted by a sphere 19 mm in diameter, and other hardware shall be examined for ferrous and nonferrous corrosion which may be transferred, either directly or by means of the webbing, to a person or his clothing during use of a seat belt assembly incorporating the hardware.

NOTE: When attachment and other hardware are permanently fastened, by sewing or other means, to the same piece of webbing, separate assemblies shall be used to test the two types of hardware. The test for corrosion resistance shall not be required for attachment hardware made from corrosion-resistant steel containing at least 11.5 percent chromium or for attachment hardware protected with an electrodeposited coating of nickel, or copper and nickel, as prescribed in S4.3(a). The assembly that has been used to test the corrosion resistance of the buckle shall be used to measure adjustment force, tilt-lock adjustment, and buckle latch in paragraphs (e), (f), and (g), respectively, of this section, assembly performance in S5.3 and buckle release force in paragraph (d) of this section.

(b) *Temperature resistance.* Three seat belt assemblies having plastic or nonmetallic hardware or having retractors shall be subjected to the conditions prescribed in Procedure D of American Society for Testing and Materials D756–78, ''Standard Practice for Determination of Weight and Shape Changes of Plastics under Accelerated Service Conditions.'' The dimension and weight measurement shall be omitted. Buckles shall be unlatched and retractors shall be fully retracted during conditioning. The hardware parts after conditioning shall be used for all applicable tests in S4.3 and S4.4.

(c) *Attachment hardware.* (1) Attachment bolts used to secure the pelvic restraint of a seat belt assembly to a

motor vehicle shall be tested in a manner similar to that shown in Figure 3. The load shall be applied at an angle of 45° to the axis of the bolt through attachment hardware from the seat belt assembly, or through a special fixture which simulates the loading applied by the attachment hardware. The attachment hardware or simulated fixture shall be fastened by the bolt to the anchorage shown in Figure 3, which has a standard 7/16–20UNF–2B or ½-UNF–2B or metric equivalent threaded hole in a hardened steel plate at least 10 mm in thickness. The bolt shall be installed with two full threads exposed from the fully seated position. The appropriate force required by S4.3(c) shall be applied. A bolt from each of three seat belt assemblies shall be tested.

(2) Attachment hardware, other than bolts, designed to receive the ends of two seat belt assemblies shall be subjected to a tensile force of 26,689 N in a manner simulating use. The hardware shall be examined for fracture after the force is released. Attachment hardware from three seat belt assemblies shall be tested.

(3) Single attachment hook for connecting webbing to any eye bolt shall be tested in the following manner: The hook shall be held rigidly so that the retainer latch or keeper, with cotter pin or other locking device in place, is in a horizontal position as shown in Figure 4. A force of 667 N ± 9 N shall be applied vertically as near as possible to the free end of the retainer latch, and the movement of the latch by this force at the point of application shall be measured. The vertical force shall be released, and a force of 667 N ± 9 N shall be applied horizontally as near as possible to the free end of the retainer latch. The movement of the latch by this force at the point of load application shall be measured. Alternatively, the hook may be held in other positions, provided the forces are applied and the movements of the latch are measured at the points indicated in Figure 4. A single attachment hook from each of three seat belt assemblies shall be tested.

(d) *Buckle release.* (1) Three seat belt assemblies shall be tested to determine compliance with the maximum buckle release force requirements, following the assembly test in S5.3. After subjection to the force applicable for the assembly being tested, the force shall be reduced and maintained at 667 N on the assembly loop of a Type 1 seat belt assembly, 334 N on the components of a Type 2 seat belt assembly. The buckle release force shall be measured by applying a force on the buckle in a manner and direction typical of those which would be employed by a seat belt occupant. For push button-release buckles, the force shall be applied at least 3 mm from the edge of the push button access opening of the buckle in a direction that produces maximum releasing effect. For lever-release buckles, the force shall be applied on the centerline of the buckle lever or finger tab in a direction that produces maximum releasing effect.

(2) The area for application of release force on pushbutton actuated buckle shall be measured to the nearest 30 mm^2. The cylinder specified in S4.3(d) shall be inserted in the actuation portion of a lever released buckle for determination of compliance with the requirement. A buckle with other release actuation shall be examined for access of release by fingers.

(3) The buckle of a Type 1 or Type 2 seat belt assembly shall be subjected to a compressive force of 1779 N applied anywhere on a test line that is coincident with the center line of the belt extended through the buckle or on any line that extends over the center of the release mechanism and intersects the extended centerline of the belt at an angle of 60°. The load shall be applied by using a curved cylindrical bar having a cross section diameter of 19 mm and a radius of curvature of 152 mm, placed with its longitudinal center line along the test line and its center directly above the point or the buckle to which the load will be applied. The buckle shall be latched, and a tensile force of 334 N shall be applied to the connected webbing during the application of the compressive force. Buckles from three seat belt assemblies shall be tested to determine compliance with paragraph S4.3(d)(3).

(e) *Adjustment Force.* Three seat belt assemblies shall be tested for adjustment force on the webbing at the buckle, or other manual adjusting device

normally used to adjust the size of the assembly. With no load on the anchor end, the webbing shall be drawn through the adjusting device at a rate of 508 mm ±50 mm per minute and the maximum force shall be measured to the nearest 1 N after the first 25 mm of webbing movement. The webbing shall be precycled 10 times prior to measurement.

(f) *Tilt-lock adjustment*. This test shall be made on buckles or other manual adjusting devices having tilt-lock adjustment normally used to adjust the size of the assembly. Three buckles or devices shall be tested. The base of the adjustment mechanism and the anchor end of the webbing shall be oriented in planes normal to each other. The webbing shall be drawn through the adjustment mechanism in a direction to increase belt length at a rate of 508 mm ±50 mm per minute while the plane of the base is slowly rotated in a direction to lock the webbing. Rotation shall be stopped when the webbing locks, but the pull on the webbing shall be continued until there is a resistance of at least 89 N. The locking angle between the anchor end of the webbing and the base of the adjustment mechanism shall be measured to the nearest degree. The webbing shall be precycled 10 times prior to measurement.

(g) *Buckle latch*. The buckles from three seat belt assemblies shall be opened fully and closed at least 10 times. Then the buckles shall be clamped or firmly held against a flat surface so as to permit normal movement of buckle part, but with the metal mating plate (metal-to-metal buckles) or of webbing end (metal-to-webbing buckles) withdrawn from the buckle. The release mechanism shall be moved 200 times through the maximum possible travel against its stop with a force of 133 N ±13 N at a rate not to exceed 30 cycles per minute. The buckle shall be examined to determine compliance with the performance requirements of S4.3(g). A metal-to-metal buckle shall be examined to determine whether partial engagement is possible by means of any technique representative of actual use. If partial engagement is possible, the maximum force of separation when in such partial engagement shall be determined.

(h) *Nonlocking retractor*. After the retractor is cycled 10 times by full extension and retraction of the webbing, the retractor and webbing shall be suspended vertically and a force of 18 N shall be applied to extend the webbing from the retractor. The force shall be reduced to 13 N when attached to a pelvic restraint, or to 5 N per strap or webbing that contacts the shoulder of an occupant when retractor is attached to an upper torso restraint. The residual extension of the webbing shall be measured by manual rotation of the retractor drum or by disengaging the retraction mechanism. Measurements shall be made on three retractors. The location of the retractor attached to upper torso restraint shall be examined for visibility of reel during use of seat belt assembly in a vehicle.

NOTE: This test shall not be required on a nonlocking retractor attached to the free end of webbing which is not subjected to any tension during restraint of an occupant by the assembly.

(i) *Automatic-locking retractor*. Three retractors shall be tested in a manner to permit the retraction force to be determined exclusive of the gravitational forces on hardware or webbing being retracted. The webbing shall be fully extended from the retractor. While the webbing is being retracted, the average force or retraction within plus or minus 51 mm of 75 percent extension (25 percent retraction) shall be determined and the webbing movement between adjacent locking segments shall be measured in the same region of extension. A seat belt assembly with automatic locking retractor in upper torso restraint shall be tested in a vehicle in a manner prescribed by the installation and usage instructions. The retraction force on the occupant of the seat belt assembly shall be determined before and after traveling for 10 minutes at a speed of 24 kilometers per hour (km/h) or more over a rough road (e.g., Belgian block road) where the occupant is subjected to displacement with respect to the vehicle in both horizontal and vertical directions. Measurements shall be made with the vehicle stopped and the occupant in the normal seated position.

(j) *Emergency-locking retractor*. A retractor shall be tested in a manner

that permits the retraction force to be determined exclusive of the gravitational forces on hardware or webbing being retracted. The webbing shall be fully extended from the retractor, passing over or through any hardware or other material specified in the installation instructions. While the webbing is being retracted, the lowest force of retraction within plus or minus 51 mm of 75 percent extension shall be determined. A retractor that is sensitive to webbing withdrawal shall be subjected to an acceleration of 3 m/s^2 (0.3 g) within a period of 50 milliseconds (ms) while the webbing is at 75 percent extension, to determine compliance with S4.3(j)(2). The retractor shall be subjected to an acceleration of 7 m/s^2 (0.7 g) within a period of 50 milliseconds (ms), while the webbing is at 75 percent extension, and the webbing movement before locking shall be measured under the following conditions: For a retractor sensitive to webbing withdrawal, the retractor shall be accelerated in the direction of webbing retraction while the retractor drum's central axis is oriented horizontally and at angles of 45°, 90°, 135°, and 180° to the horizontal plane. For a retractor sensitive to vehicle acceleration, the retractor shall be:

(1) Accelerated in the horizontal plane in two directions normal to each other, while the retractor drum's central axis is oriented at the angle at which it is installed in the vehicle; and,

(2) Accelerated in three directions normal to each other while the retractor drum's central axis is oriented at angles of 45°, 90°, 135°, and 180° from the angle at which it is installed in the vehicle, unless the retractor locks by gravitational force when tilted in any direction to any angle greater than 45° from the angle at which it is installed in the vehicle.

(k) *Performance of retractor*. After completion of the corrosion-resistance test described in paragraph (a) of this section, the webbing shall be fully extended and allowed to dry for at least 24 hours under standard laboratory conditions specified in S5.1(a). The retractor shall be examined for ferrous and nonferrous corrosion which may be transferred, either directly or by means of the webbing, to a person or his clothing during use of a seat belt assembly incorporating the retractor, and for ferrous corrosion on significant surfaces if the retractor is part of the attachment hardware. The webbing shall be withdrawn manually and allowed to retract for 25 cycles. The retractor shall be mounted in an apparatus capable of extending the webbing fully, applying a force of 89 N at full extension, and allowing the webbing to retract freely and completely. The webbing shall be withdrawn from the retractor and allowed to retract repeatedly in this apparatus until 2,500 cycles are completed. The retractor and webbing shall then be subjected to the temperature resistance test prescribed in paragraph (b) of this section. The retractor shall be subjected to 2,500 additional cycles of webbing withdrawal and retraction. Then, the retractor and webbing shall be subjected to dust in a chamber similar to one illustrated in Figure 8 containing about 0.9 kg of coarse grade dust conforming to the specification given in Society of Automotive Engineering Recommended Practice J726, ''Air Cleaner Test Code'' Sept. 1979. The dust shall be agitated every 20 minutes for 5 seconds by compressed air, free of oil and moisture, at a gage pressure of 550 ±55 kPa entering through an orifice 1.5 ± 0.1 mm in diameter. The webbing shall be extended to the top of the chamber and kept extended at all times except that the webbing shall be subjected to 10 cycles of complete retraction and extension within 1 to 2 minutes after each agitation of the dust. At the end of 5 hours, the assembly shall be removed from the chamber. The webbing shall be fully withdrawn from the retractor manually and allowed to retract completely for 25 cycles. An automatic-locking retractor or a nonlocking retractor attached to pelvic restraint shall be subjected to 5,000 additional cycles of webbing withdrawal and retraction. An emergency locking retractor or a nonlocking retractor attached to upper torso restraint shall be subjected to 45,000 additional cycles of webbing withdrawal and retraction between 50 and 100 per cent extension. The locking mechanism of an emergency locking retractor shall be actuated at least 10,000 times within 50 to

100 percent extension of webbing during the 50,000 cycles. At the end of test, compliance of the retractors with applicable requirements in S4.3 (h), (i), and (j) shall be determined. Three retractors shall be tested for performance.

S5.3 *Assembly performance—(a) Type 1 seat belt assembly*. Three complete seat belt assemblies, including webbing, straps, buckles, adjustment and attachment hardware, and retractors, arranged in the form of a loop as shown in Figure 5, shall be tested in the following manner:

(1) The testing machine shall conform to the requirements specified in S5.1(b). A double-roller block shall be attached to one head of the testing machine. This block shall consist of two rollers 102 mm in diameter and sufficiently long so that no part of the seat belt assembly touches parts of the block other than the rollers during test. The rollers shall be mounted on antifriction bearings and spaced 305 mm between centers, and shall have sufficient capacity so that there is no brinelling, bending or other distortion of parts which may affect the results. An anchorage bar shall be fastened to the other head of the testing machine.

(2) The attachment hardware furnished with the seat belt assembly shall be attached to the anchorage bar. The anchor points shall be spaced so that the webbing is parallel in the two sides of the loop. The attaching bolts shall be parallel to, or at an angle of 45° or 90° to the webbing, whichever results in an angle nearest to 90° between webbing and attachment hardware except that eye bolts shall be vertical, and attaching bolts or nonthreaded anchorages of a seat belt assembly designed for use in specific models of motor vehicles shall be installed to produce the maximum angle in use indicated by the installation instructions, utilizing special fixtures if necessary to simulate installation in the motor vehicle. Rigid adapters between anchorage bar and attachment hardware shall be used if necessary to locate and orient the adjustment hardware. The adapters shall have a flat support face perpendicular to the threaded hole for the attaching bolt and adequate in area to provide full support for the base of the attachment hardware connected to the webbing. If necessary, a washer shall be used under a swivel plate or other attachment hardware to prevent the webbing from being damaged as the attaching bolt is tightened.

(3) The length of the assembly loop from attaching bolt to attaching bolt shall be adjusted to about 1295 mm, or as near thereto as possible. A force of 245 N shall be applied to the loop to remove any slack in webbing at hardware. The force shall be removed and the heads of the testing machine shall be adjusted for an assembly loop between 1220 and 1270 mm in length. The length of the assembly loop shall then be adjusted by applying a force between 89 and 98 N to the free end of the webbing at the buckle, or by the retraction force of an automatic-locking or emergency-locking retractor. A seat belt assembly that cannot be adjusted to this length shall be adjusted as closely as possible. An automatic-locking or emergency locking retractor when included in a seat belt assembly shall be locked at the start of the test with a tension on the webbing slightly in excess of the retractive force in order to keep the retractor locked. The buckle shall be in a location so that it does not touch the rollers during test, but to facilitate making the buckle release test in S5.2(d) the buckle should be between the rollers or near a roller in one leg.

(4) The heads of the testing machine shall be separated at a rate between 51 and 102 mm per minute until a force of 22,241 ± 222 N is applied to the assembly loop. The extension of the loop shall be determined from measurements of head separation before and after the force is applied. The force shall be decreased to 667 ± 45 N and the buckle release force measured as prescribed in S5.2(d).

(5) After the buckle is released, the webbing shall be examined for cutting by the hardware. If the yarns are partially or completely severed in a line for a distance of 10 percent or more of the webbing width, the cut webbing shall be tested for breaking strength as specified in S5.1(b) locating the cut in the free length between grips. If there is insufficient webbing on either side of

the cut to make such a test for breaking strength, another seat belt assembly shall be used with the webbing repositioned in the hardware. A tensile force of 11,120 ± 111 N shall be applied to the components or a force of 22,241 ± 222 N shall be applied to the assembly loop. After the force is removed, the breaking strength of the cut webbing shall be determined as prescribed above.

(6) If a Type 1 seat belt assembly includes an automatic-locking retractor or an emergency-locking retractor, the webbing and retractor shall be subjected to a tensile force of 11,120 ± 111 N with the webbing fully extended from the retractor.

(7) If a seat belt assembly has a buckle in which the tongue is capable of inverted insertion, one of the three assemblies shall be tested with the tongue inverted.

(b) *Type 2 seat belt assembly.* Components of three seat belt assemblies shall be tested in the following manner:

(1) The pelvic restraint between anchorages shall be adjusted to a length between 1220 and 1270 mm, or as near this length as possible if the design of the pelvic restraint does not permit its adjustment to this length. An automatic-locking or emergency-locking retractor when included in a seat belt assembly shall be locked at the start of the test with a tension on the webbing slightly in excess of the retractive force in order to keep the retractor locked. The attachment hardware shall be oriented to the webbing as specified in paragraph (a)(2) of this section and illustrated in Figure 5. A tensile force 11,120 ± 111 N shall be applied on the components in any convenient manner and the extension between anchorages under this force shall be measured. The force shall be reduced to 334 ± 22 N and the buckle release force measured as prescribed in S5.2(d).

(2) The components of the upper torso restraint shall be subjected to a tensile force of 6,672 ± 67 N following the procedure prescribed above for testing pelvic restraint and the extension between anchorages under this force shall be measured. If the testing apparatus permits, the pelvic and upper torso restraints may be tested simultaneously. The force shall be reduced to 334 ± 22 N and the buckle release force measured as prescribed in S5.2(d).

(3) Any component of the seat belt assembly common to both pelvic and upper torso restraint shall be subjected to a tensile force of 13,344 ± 134 N.

(4) After the buckle is released in tests of pelvic and upper torso restraints, the webbing shall be examined for cutting by the hardware. If the yarns are partially or completely severed in a line for a distance of 10 percent or more of the webbing width, the cut webbing shall be tested for breaking strength as specified in S5.1(b) locating the cut in the free length between grips. If there is insufficient webbing on either side of the cut to make such a test for breaking strength, another seat belt assembly shall be used with the webbing repositioned in the hardware. The force applied shall be 11,120 ± 111 N for components of pelvic restraint, and 6,672 ± 67 N for components of upper torso restraint. After the force is removed, the breaking strength of the cut webbing shall be determined as prescribed above.

(5) If a Type 2 seat belt assembly includes an automatic-locking retractor or an emergency-locking retractor the webbing and retractor shall be subjected to a tensile force of 11,120 ± 111 N with the webbing fully extended from the retractor, or to a tensile force of 6,672 ± 67 N with the webbing fully extended from the retractor if the design of the assembly permits only upper torso restraint forces on the retractor.

(6) If a seat belt assembly has a buckle in which the tongue is capable of inverted insertion, one of the three assemblies shall be tested with the tongue inverted.

(c) *Resistance to buckle abrasion.* Seat belt assemblies shall be tested for resistance to abrasion by each buckle or manual adjusting device normally used to adjust the size of the assembly. The webbing of the assembly to be used in this test shall be exposed for 4 hours to an atmosphere having relative humidity of 65 per cent and temperature of 18 °C. The webbing shall be pulled back and forth through the buckle or manual adjusting device as shown schematically in Figure 7. The anchor end

of the webbing (A) shall be attached to a mass (B) of 1.4 kg. The webbing shall pass through the buckle (C), and the other end (D) shall be attached to a reciprocating device so that the webbing forms an angle of 8° with the hinge stop (E). The reciprocating device shall be operated for 2,500 cycles at a rate of 18 cycles per minute with a stroke length of 203 mm. The abraded webbing shall be tested for breaking strength by the procedure described in paragraph S5.1(b).

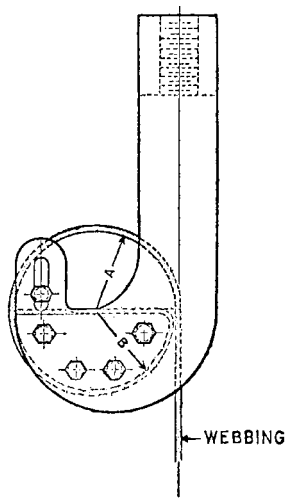

A 1 TO 2 INCHES OR 2.5 TO 5 CENTIMETERS

B A MINUS 0.06 INCH OR 0.15 CENTIMETER

FIGURE 1

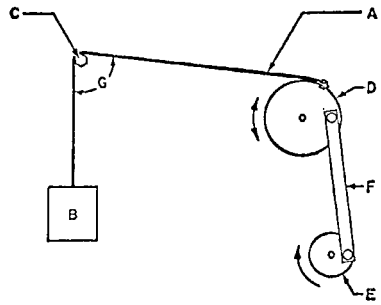

A – WEBBING

B – WEIGHT

C – HEXAGONAL ROD
STEEL – SAE 51416
ROCKWELL HARDNESS – B-97 TO B-101
SURFACE – COLD DRAWN FINISH
SIZE – 0.250 ± 0.001 INCH OR
6.35 ± 0.03 MILLIMETER
RADIUS ON EDGES – 0.020 ± 0.004 INCH OR
0.5 ± 0.1 MILLIMETER

D – DRUM DIAMETER – 16 INCHES OR
40 CENTIMETERS

E – CRANK

F – CRANK ARM

G – ANGLE BETWEEN WEBBING – 85 ± 2 DEGS.

FIGURE 2

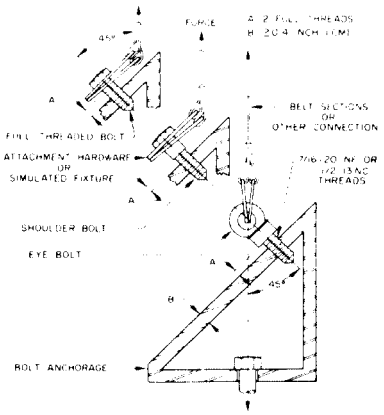

FIGURE 3

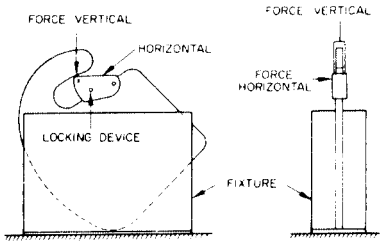

FIGURE 4
SINGLE ATTACHMENT HOOK

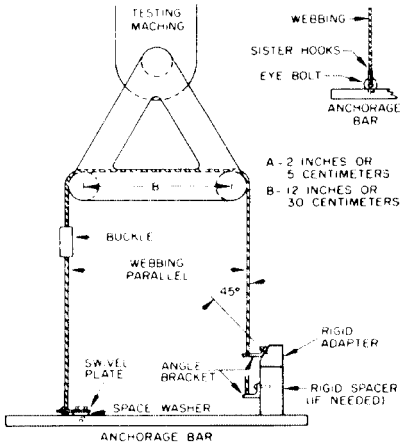

FIGURE 5

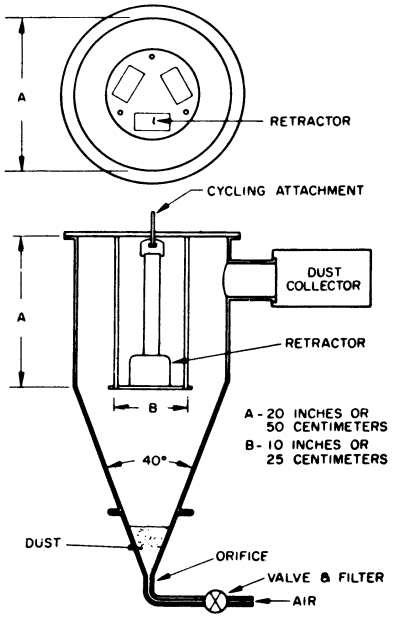

FIGURE 6

[34 F.R. 115
January 4, 1969]

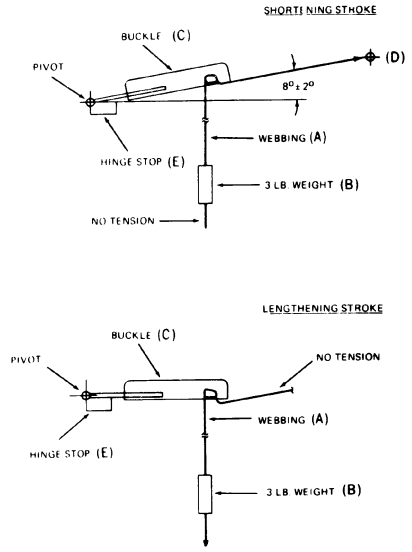

FIGURE 7

[44 FR 72139, Dec. 13, 1979, as amended at 45 FR 29048, May 1, 1980; 46 FR 2620, Jan. 12, 1981; 48 FR 30140, June 30, 1983; 49 FR 36508, Sept. 18, 1984; 51 FR 9813, Mar. 21, 1986; 51 FR 31774, Sept. 5, 1986; 52 FR 44912, Nov. 23, 1987; 56 FR 15299, Apr. 16, 1991; 56 FR 56325, Nov. 4, 1991; 59

FR 17994, Apr. 15, 1994; 61 FR 20171, May 6, 1996; 63 FR 28936, May 27, 1998; 63 FR 51003, Sept. 24, 1998; 64 FR 27206, May 19, 1999]

§ 571.210 Standard No. 210; Seat belt assembly anchorages.

S1. *Purpose and scope.* This standard establishes requirements for seat belt assembly anchorages to insure their proper location for effective occupant restraint and to reduce the likelihood of their failure.

S2. *Application.* This standard applies to passenger cars, multipurpose passenger vehicles, trucks, and buses.

S3. Definition. *Seat belt anchorage* means any component, other than the webbing or straps, involved in transferring seat belt loads to the vehicle structure, including, but not limited to, the attachment hardware, seat frames, seat pedestals, the vehicle structure itself, and any part of the vehicle whose failure causes separation of the belt from the vehicle structure.

S4. *Requirements.*

S4.1 *Type.*

S4.1.1 Seat belt anchorages for a Type 1 or a Type 2 seat belt assembly shall be installed for each designated seating position for which a Type 1 or a Type 2 seat belt assembly is required by Standard No. 208 (49 CFR 571.208). Seat belt anchorages for a Type 2 seat belt assembly shall be installed for each designated seating position for which a Type 2 seat belt assembly is required by Standard No. 208 (49 CFR 571.208).

S4.1.2 (a) Notwithstanding the requirement of S4.1.1, each vehicle manufactured on or after September 1, 1987 that is equipped with an automatic restraint at the front right outboard designated seating position, which automatic restraint cannot be used for securing a child restraint system or cannot be adjusted by the vehicle owner to secure a child restraint system solely through the use of attachment hardware installed as an item of original equipment by the vehicle manufacturer, shall have, at the manufacturer's option, either anchorages for a Type 1 seat belt assembly installed at that position or a Type 1 or Type 2 seat belt assembly installed at that position. If a manufacturer elects to install anchorages for a Type 1 seat belt assembly to comply with this requirement, those anchorages shall consist of, at a minimum, holes threaded to accept bolts that comply with S4.1(f) of Standard No. 209 (49 CFR 571.209).

(b) The requirement in S4.1.1 of this standard that seat belt anchorages for a Type 1 or a Type 2 seat belt assembly shall be installed for certain designated seating positions does not apply to any such seating positions that are equipped with a seat belt assembly that meets the frontal crash protection requirements of S5.1 of Standard No. 208 (49 CFR 571.208).

S4.2 *Strength.*

S4.2.1 Except as provided in S4.2.5, and except for side-facing seats, the anchorages, attachment hardware, and attachment bolts for any of the following seat belt assemblies shall withstand a 5,000 pound force when tested in accordance with S5.1 of this standard:

(a) Type 1 seat belt assembly; and

(b) Lap belt portion of either a Type 2 or automatic seat belt assembly, if such seat belt assembly is equipped with a detachable upper torso belt.

S4.2.2 Except as provided in S4.2.5, and except for side facing seats, the anchorages, attachment hardware, and attachment bolts for any of the following seat belt assemblies shall withstand a 3,000 pound force applied to the lap belt portion of the seat belt assembly simultaneously with a 3,000 pound force applied to the shoulder belt portion of the seat belt assembly, when tested in accordance with S5.2 of this standard:

(a) Type 2 and automatic seat belt assemblies that are installed to comply with Standard No. 208 (49 CFR 571.208); and

(b) Type 2 and automatic seat belt assemblies that are installed at a seating position required to have a Type 1 or Type 2 seat belt assembly by Standard No. 208 (49 CFR 571.208).

S4.2.3 Permanent deformation or rupture of a seat belt anchorage or its surrounding area is not considered to be a failure, if the required force is sustained for the specified time.

S4.2.4 Anchorages, attachment hardware, and attachment bolts shall

be tested by simultaneously loading them in accordance with the applicable procedures set forth in S5 of this standard if the anchorages are either:

(a) For designated seating positions that are common to the same occupant seat and that face in the same direction, or

(b) For laterally adjacent designated seating positions that are not common to the same occupant seat, but that face in the same direction, if the vertical centerline of the bolt hole for at least one of the anchorages for one of those designated seating positions is within 305 mm of the vertical center line of the bolt hole for an anchorage for one of the adjacent seating positions.

S4.2.5 The attachment hardware of a seat belt assembly, which is subject to the requirements of S5.1 of Standard No. 208 (49 CFR 571.208) by virtue of any provision of Standard No. 208 other than S4.1.2.1(c)(2) of that standard, does not have to meet the requirements of S4.2.1 and S4.2.2 of this standard.

S4.3 *Location*. As used in this section, ''forward'' means the direction in which the seat faces, and other directional references are to be interpreted accordingly. Anchorages for seat belt assemblies that meet the frontal crash protection requirements of S5.1 of Standard No. 208 (49 CFR 571.208) are exempt from the location requirements of this section.

S4.3.1 *Seat belt anchorages for Type 1 seat belt assemblies and the pelvic portion of Type 2 seat belt assemblies*.

S4.3.1.1 In an installation in which the seat belt does not bear upon the seat frame:

(a) If the seat is a nonadjustable seat, then a line from the seating reference point to the nearest contact point of the belt with the anchorage shall extend forward from the anchorage at an angle with the horizontal of not less than 30 degrees and not more than 75 degrees.

(b) If the seat is an adjustable seat, then a line from a point 64 mm forward of and 10 mm above the seating reference point to the nearest contact point of the belt with the anchorage shall extend forward from the anchorage at an angle with the horizontal of not less than 30 degrees and not more than 75 degrees.

S4.3.1.2 In an installation in which the belt bears upon the seat frame, the seat belt anchorage, if not on the seat structure, shall be aft of the rearmost belt contact point on the seat frame with the seat in the rearmost position. The line from the seating reference point to the nearest belt contact point on the seat frame, with the seat positioned at the seating reference point, shall extend forward from that contact point at an angle with the horizontal of not less than 30 degrees and not more than 75 degrees.

S4.3.1.3 In an installation in which the seat belt attaches to the seat structure, the line from the seating reference point to the nearest contact point of the belt with the hardware attaching it to the seat structure shall extend forward from that contact point at an angle with the horizontal of not less than 30 degrees and not more than 75 degrees.

S4.3.1.4 Anchorages for an individual seat belt assembly shall be located at least 165 mm apart laterally, measured between the vertical center line of the bolt holes or, for designs using other means of attachment to the vehicle structure, between the centroid of such means.

S4.3.2 *Seat belt anchorages for the upper torso portion of Type 2 seat belt assemblies*. Adjust the seat to its full rearward and downward position and adjust the seat back to its most upright position. With the seat and seat back so positioned, as specified by subsection (a) or (b) of this section, the upper end of the upper torso restraint shall be located within the acceptable range shown in Figure 1, with reference to a two-dimensional drafting template described in SAE Recommended Practice J826 (May 1987). The template's ''H'' point shall be at the design ''H'' point of the seat for its full rearward and full downward position, as defined in SAE Recommended Practice J1100 (June 1984), and the template's torso line shall be at the same angle from the vertical as the seat back.

(a) For fixed anchorages, compliance with this section shall be determined at the vertical centerline of the bolt holes or, for designs using another

means of attachment to the vehicle structure, at the centroid of such means.

(b) For adjustable anchorages, compliance with this section shall be determined at the midpoint of the range of all adjustment positions.

S5. *Test procedures.* Each vehicle shall meet the requirements of S4.2 of this standard when tested according to the following procedures. Where a range of values is specified, the vehicle shall be able to meet the requirements at all points within the range. For the testing specified in these procedures, the anchorage shall be connected to material whose breaking strength is equal to or greater than the breaking strength of the webbing for the seat belt assembly installed as original equipment at that seating position. The geometry of the attachment duplicates the geometry, at the initiation of the test, of the attachment of the originally installed seat belt assembly.

S5.1 *Seats with Type 1 or Type 2 seat belt anchorages.* With the seat in its rearmost position, apply a force of 22,241 N in the direction in which the seat faces to a pelvic body block as described in Figure 2A, in a plane parallel to the longitudinal centerline of the vehicle, with an initial force application angle of not less than 5 degrees or more than 15 degrees above the horizontal. Apply the force at the onset rate of not more than 222,411 N per second. Attain the 22,241 N force in not more than 30 seconds and maintain it for 10 seconds. At the manufacturer's option, the pelvic body block described in Figure 2B may be substituted for the pelvic body block described in Figure 2A to apply the specified force to the center set(s) of anchorages for any group of three or more sets of anchorages that are simultaneously loaded in accordance with S4.2.4 of this standard.

S5.2 *Seats with Type 2 or automatic seat belt anchorages.* With the seat in its rearmost position, apply forces of 13,345 N in the direction in which the seat faces simultaneously to a pelvic body block, as described in Figure 2A, and an upper torso body block, as described in Figure 3, in a plane parallel to the longitudinal centerline of the vehicle, with an initial force application angle of not less than 5 degrees nor more than 15 degrees above the horizontal. Apply the forces at the onset rate of not more than 133,447 N per second. Attain the 13,345 N force in not more than 30 seconds and maintain it for 10 seconds. At the manufacturer's option, the pelvic body block described in Figure 2B may be substituted for the pelvic body block described in Figure 2A to apply the specified force to the center set(s) of anchorages for any group of three or more sets of anchorages that are simultaneously loaded in accordance with S4.2.4 of this standard.

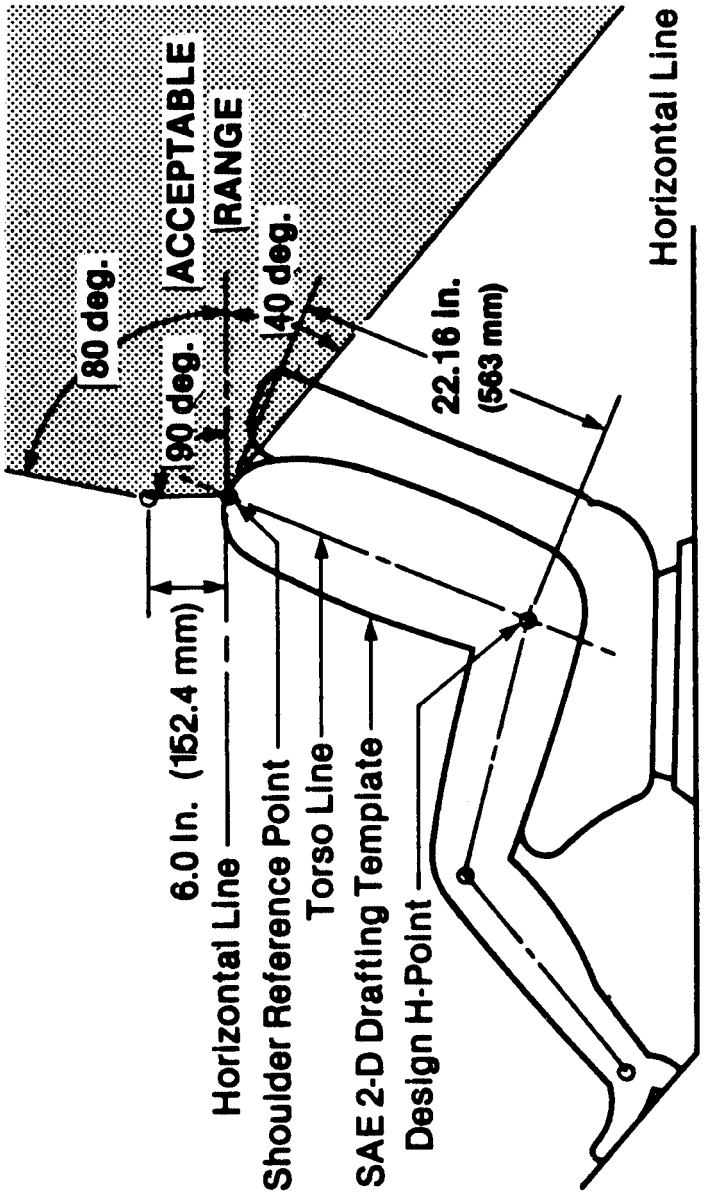

FIGURE 1 - LOCATION OF ANCHORAGE FOR UPPER TORSO RESTRAINT

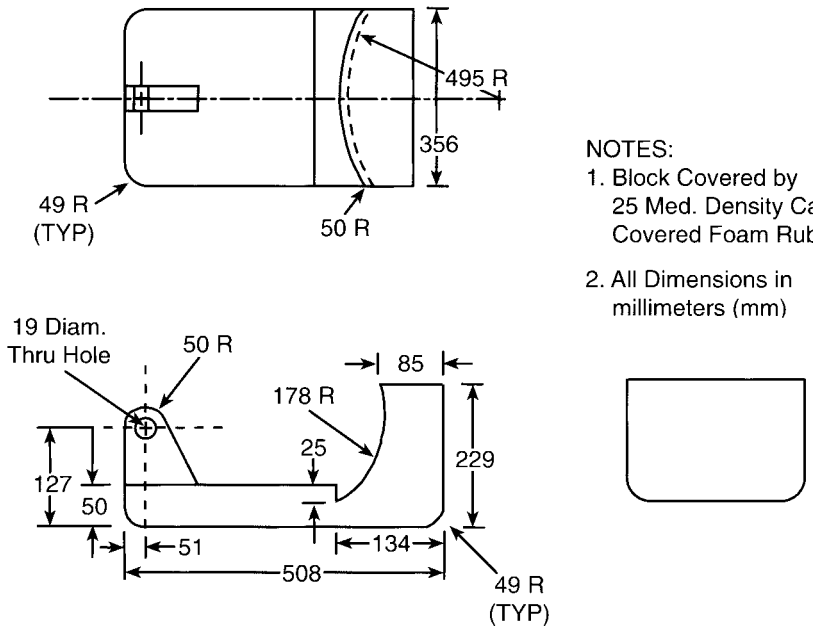

Figure 2A.—BODY BLOCK FOR LAP BELT ANCHORAGE

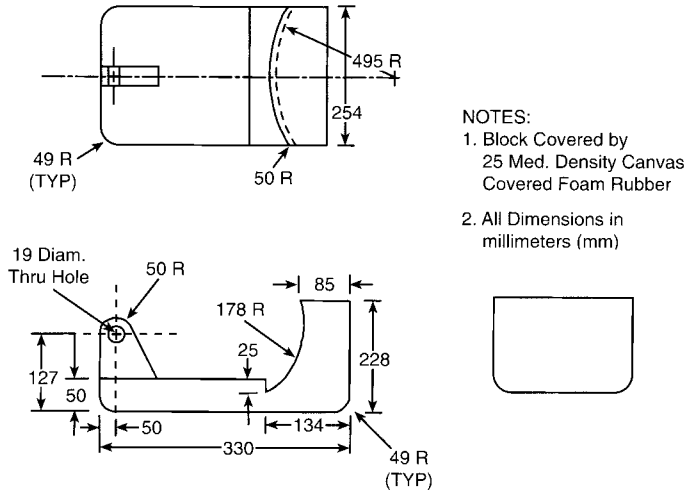

Figure 2B.—OPTIONAL BODY BLOCK FOR CENTER SEATING POSITIONS

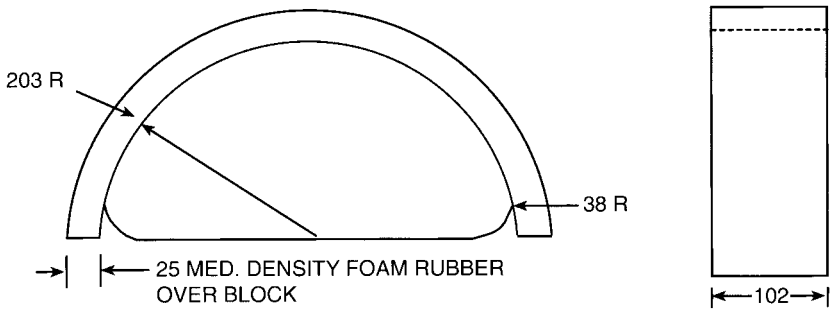

Figure 3.—BODY BLOCK FOR COMBINATION SHOULDER AND LAP BELT ANCHORAGE
All dimensions in millimeters (mm)

S6. *Owner's Manual Information.* The owner's manual in each vehicle with a gross vehicle weight rating of 4,536 kg or less manufactured after September 1, 1987 shall include:

(a) A section explaining that all child restraint systems are designed to be secured in vehicle seats by lap belts or the lap belt portion of a lap-shoulder belt. The section shall also explain that children could be endangered in a crash if their child restraints are not properly secured in the vehicle.

(b) In a vehicle with rear designated seating positions, a statement alerting vehicle owners that, according to accident statistics, children are safer when properly restrained in the rear seating positions than in the front seating positions.

[36 FR 22902, Dec. 2, 1971, as amended at 37 FR 9323, May 9, 1972; 43 FR 21892, May 22, 1978; 43 FR 53442, Nov. 16, 1978; 50 FR 41359, Oct. 10, 1985; 51 FR 9813, Mar. 21, 1986; 51 FR 29555, Aug. 19, 1986; 54 FR 25278, June 14, 1989; 54 FR 46268, Nov. 2, 1989; 55 FR 17983, Apr. 30, 1990; 55 FR 24241, June 15, 1990; 56 FR 63681, 63685, Dec. 5, 1991; 57 FR 32904, July 24, 1992; 60 FR 3775, Jan. 19, 1995; 61 FR 19561, May 2, 1996; 63 FR 28941, 28942, May 27, 1998; 63 FR 32143, June 12, 1998]

§571.211 [Reserved]

§571.212 Standard No. 212; Windshield mounting.

S1. *Scope.* This standard establishes windshield retention requirements for motor vehicles during crashes.

S2. *Purpose.* The purpose of this standard is to reduce crash injuries and fatalities by providing for retention of the vehicle windshield during a crash, thereby utilizing fully the penetration-resistance and injury-avoidance properties of the windshield glazing material and preventing the ejection of occupants from the vehicle.

S3. *Application.* This standard applies to passenger cars, and to multipurpose passenger vehicles, trucks, and buses having a gross vehicle weight rating of 4536 kilograms or less. However, it does not apply to forward control vehicles, walk-in van-type vehicles, or to open-body type vehicles with fold-down or removable windshields.

S4. *Definition. Passive restraint system* means a system meeting the occupant crash protection requirements of S5. of Standard No. 208 by means that require no action by vehicle occupants.

S5. *Requirements.* When the vehicle travelling longitudinally forward at any speed up to and including 48 kilometers per hour impacts a fixed collision barrier that is perpendicular to the line of travel of the vehicle, under the conditions of S6, the windshield

mounting of the vehicle shall retain not less than the minimum portion of the windshield periphery specified in S5.1 and S5.2.

S5.1 *Vehicles equipped with passive restraints.* Vehicles equipped with passive restraint systems shall retain not less than 50 percent of the portion of the windshield periphery on each side of the vehicle longitudinal centerline.

S5.2 *Vehicles not equipped with passive restraints.* Vehicles not equipped with passive restraint systems shall retain not less than 75 percent of the windshield periphery.

S6. *Test conditions.* The requirements of S5. shall be met under the following conditions:

S6.1 The vehicle, including test devices and instrumentation, is loaded as follows:

(a) Except as specified in S6.2, a passenger car is loaded to its unloaded vehicle weight plus its cargo and luggage capacity weight, secured in the luggage area, plus a 50th-percentile test dummy as specified in part 572 of this chapter at each front outboard designated seating position and at any other position whose protection system is required to be tested by a dummy under the provisions of Standard No. 208. Each dummy is restrained only by means that are installed for protection at its seating position.

(b) Except as specified in S6.2, a multipurpose passenger vehicle, truck or bus is loaded to its unloaded vehicle weight, plus 136 kilograms or its rated cargo and luggage capacity, whichever is less, secured to the vehicle, plus a 50th-percentile test dummy as specified in part 572 of this chapter at each front outboard designated seating position and at any other position whose protection system is required to be tested by a dummy under the provisions of Standard No. 208. Each dummy is restrained only by means that are installed for protection at its seating position. The load is distributed so that the weight on each axle as measured at the tire-ground interface is in proportion to its GAWR. If the weight on any axle when the vehicle is loaded to its unloaded vehicle weight plus dummy weight exceeds the axle's proportional share of the test weight, the remaining weight is placed so that the weight on that axle remains the same. For the purposes of this section, unloaded vehicle weight does not include the weight of work-performing accessories. Vehicles are tested to a maximum unloaded vehicle weight of 2,495 kilograms.

S6.2 The fuel tank is filled to any level from 90 to 95 percent of capacity.

S6.3 The parking brake is disengaged and the transmission is in neutral.

S6.4 Tires are inflated to the vehicle manufacturer's specifications.

S6.5 The windshield mounting material and all vehicle components in direct contact with the mounting material are at any temperature between −9 degrees Celsius and +43 degrees Celsius.

[41 FR 36494, Aug. 30, 1976, as amended at 42 FR 34289, July 5, 1977; 45 FR 22046, Apr. 3, 1980; 60 FR 13647, Mar. 14, 1995]

§ 571.213 Standard No. 213; Child restraint systems.

S1. *Scope.* This standard specifies requirements for child restraint systems used in motor vehicles and aircraft.

S2. *Purpose.* The purpose of this standard is to reduce the number of children killed or injured in motor vehicle crashes and in aircraft.

S3. *Application.* This standard applies to passenger cars, multipurpose passenger vehicles, trucks and buses, and to child restraint systems for use in motor vehicles and aircraft.

S4. *Definitions.*

Add-on child restraint system means any portable child restraint system.

Backless child restraint system means a child restraint, other than a belt-positioning seat, that consists of a seating platform that does not extend up to provide a cushion for the child's back or head and has a structural element designed to restrain forward motion of the child's torso in a forward impact.

Belt-positioning seat means a child restraint system that positions a child on a vehicle seat to improve the fit of a vehicle Type II belt system on the child and that lacks any component, such as a belt system or a structural element, designed to restrain forward movement of the child's torso in a forward impact.

Booster seat means either a backless child restraint system or a belt-positioning seat.

Built-in child restraint system means a child restraint system that is designed to be an integral part of and permanently installed in a motor vehicle.

Car bed means a child restraint system designed to restrain or position a child in the supine or prone position on a continuous flat surface.

Child restraint anchorage system is defined in S3 of FMVSS No. 225 (§571.225).

Child restraint system means any device except Type I or Type II seat belts, designed for use in a motor vehicle or aircraft to restrain, seat, or position children who weigh 50 pounds or less.

Contactable surface means any child restraint system surface (other than that of a belt, belt buckle, or belt adjustment hardware) that may contact any part of the head or torso of the appropriate test dummy, specified in S7, when a child restraint system is tested in accordance with S6.1.

Factory-installed built-in child restraint system means a built-in child restraint system that has been or will be permanently installed in a motor vehicle before that vehicle is certified as a completed or altered vehicle in accordance with part 567 of this chapter.

Rear-facing child restraint system means a child restraint system, except a car bed, that positions a child to face in the direction opposite to the normal direction of travel of the motor vehicle.

Representative aircraft passenger seat means either a Federal Aviation Administration approved production aircraft passenger seat or a simulated aircraft passenger seat conforming to Figure 6.

Seat orientation reference line or *SORL* means the horizontal line through Point Z as illustrated in Figure 1A.

Specific vehicle shell means the actual vehicle model part into which the built-in child restraint system is or is intended to be fabricated, including the complete surroundings of the built-in system. If the built-in child restraint system is or is intended to be fabricated as part of any seat other than a front seat, these surroundings include the back of the seat in front, the interior rear side door panels and trim, the floor pan, adjacent pillars (e.g., the B and C pillars), and the ceiling. If the built-in system is or is intended to be fabricated as part of the front seat, these surroundings include the dashboard, the steering mechanism and its associated trim hardware, any levers and knobs installed on the floor or on a console, the interior front side door panels and trim, the front seat, the floor pan, the A pillars and the ceiling.

Tether anchorage is defined in S3 of FMVSS No. 225 (§571.225).

Tether strap is defined in S3 of FMVSS No. 225 (§571.225).

Tether hook is defined in S3 of FMVSS No. 225 (§571.225).

Torso means the portion of the body of a seated anthropomorphic test dummy, excluding the thighs, that lies between the top of the child restraint system seating surface and the top of the shoulders of the test dummy.

S5. *Requirements*. (a) Each motor vehicle with a built-in child restraint system shall meet the requirements in this section when, as specified, tested in accordance with S6.1 and this paragraph.

(b) Each child restraint system manufactured for use in motor vehicles shall meet the requirements in this section when, as specified, tested in accordance with S6.1 and this paragraph. Each add-on system shall meet the requirements at each of the restraint's seat back angle adjustment positions and restraint belt routing positions, when the restraint is oriented in the direction recommended by the manufacturer (e.g., forward, rearward or laterally) pursuant to S5.6, and tested with the test dummy specified in S7.

(c) Each child restraint system manufactured for use in aircraft shall meet the requirements in this section and the additional requirements in S8.

S5.1 *Dynamic performance*.

S5.1.1 *Child restraint system integrity*. When tested in accordance with S6.1, each child restraint system shall meet the requirements of paragraphs (a) through (c) of this section.

(a) Exhibit no complete separation of any load bearing structural element and no partial separation exposing either surfaces with a radius of less than ¼ inch or surfaces with protrusions

greater than ⅜ inch above the immediate adjacent surrounding contactable surface of any structural element of the system.

(b)(1) If adjustable to different positions, remain in the same adjustment position during the testing that it was in immediately before the testing, except as otherwise specified in paragraph (b)(2).

(2)(i) Subject to paragraph (b)(2)(ii), a rear-facing child restraint system may have a means for repositioning the seating surface of the system that allows the system's occupant to move from a reclined position to an upright position and back to a reclined position during testing.

(ii) No opening that is exposed and is larger than ¼ inch before the testing shall become smaller during the testing as a result of the movement of the seating surface relative to the restraint system as a whole.

(c) If a front facing child restraint system, not allow the angle between the system's back support surfaces for the child and the system's seating surface to be less than 45 degrees at the completion of the test.

S5.1.2 *Injury criteria*. When tested in accordance with S6.1, each child restraint system that, in accordance with S5.5.2(f), is recommended for use by children whose masses are more than 10 kilograms (kg) shall—

(a) Limit the resultant acceleration at the location of the accelerometer mounted in the test dummy head as specified in part 572 such that the expression:

$$\left[\frac{1}{(t_2 - t_1)}\int_{t_1}^{t_2} a\,dt\right]^{2.5}(t_2 - t_1)$$

shall not exceed 1,000, where a is the resultant acceleration expressed as a multiple of g (the acceleration of gravity), and t_1 and t_2 are any two moments during the impacts.

(b) Limit the resultant acceleration at the location of the accelerometer mounted in the test dummy upper thorax as specified in part 572 to not more than 60 g's, except for intervals whose cumulative duration is not more than 3 milliseconds.

S5.1.3 *Occupant excursion*. When tested in accordance with S6.1 and the requirements specified in this section, each child restraint system shall meet the applicable excursion limit requirements specified in S5.1.3.1–S5.1.3.3.

S5.1.3.1 *Child restraint systems other than rear-facing ones and car beds*. Each child restraint system, other than a rear-facing child restraint system or a car bed, shall retain the test dummy's torso within the system.

(a) For each add-on child restraint system:

(1) No portion of the test dummy's head shall pass through a vertical transverse plane that is 720 mm or 813 mm (as specified in the table in this S5.1.3.1) forward of point Z on the standard seat assembly, measured along the center SORL (as illustrated in figure 1B of this standard); and

(2) Neither knee pivot point shall pass through a vertical transverse plane that is 915 mm forward of point Z on the standard seat assembly, measured along the center SORL.

Table to S5.1.3.1(a) - Add-On Forward-Facing Child Restraints

When this type of child restraint	is tested in accordance with--	these excursion limits apply	*Explanatory note*: In the test specified in 2nd column, the child restraint is attached to the test seat assembly in the manner described below, subject to certain conditions
Harnesses, backless booster seats and restraints designed for use by physically handicapped children	S6.1.2(a)(1)(i)(A)	Head 813 mm; Knee 915 mm	Attached with lap belt; in addition, if a tether is provided, it is attached
Belt-positioning seats	S6.1.2(a)(1)(ii)	Head 813 mm; Knee 915 mm	Attached with lap and shoulder belt; no tether is attached
All other child restraints, manufactured before September 1, 1999	S6.1.2(a)(1)(i)(B)	Head 813 mm; Knee 915 mm	Attached with lap belt; no tether is attached
All other child restraints, manufactured on or after September 1, 1999	S6.1.2(a)(1)(i)(B)	Head 813 mm; Knee 915 mm	Attached with lap belt; no tether is attached
	S6.1.2(a)(1)(i)(D) (beginning September 1, 2002)		Attached to lower anchorages of child restraint anchorage system; no tether is attached
	S6.1.2(a)(1)(i)(A)	Head 720 mm; Knee 915 mm	Attached with lap belt; in addition, if a tether is provided, it is attached
	S6.1.2(a)(1)(i)(C) (beginning September 1, 2002)		Attached to lower anchorages of child restraint anchorage system; in addition, if a tether is provided, it is attached

(b) In the case of a built-in child restraint system, neither knee pivot point shall, at any time during the dynamic test, pass through a vertical transverse plane that is 305 mm forward of the initial pre-test position of the respective knee pivot point, measured along a horizontal line that passes through the knee pivot point and is parallel to the vertical longitudinal plane that passes through the vehicle's longitudinal centerline.

S5.1.3.2 *Rear-facing child restraint systems.* In the case of each rear-facing child restraint system, all portions of the test dummy's torso shall be retained within the system and neither of the target points on either side of the dummy's head and on the transverse axis passing through the center of mass of the dummy's head and perpendicular to the head's midsagittal plane, shall pass through the transverse orthogonal planes whose intersection contains the forward-most and top-most points on the child restraint system surfaces (illustrated in Figure 1C).

S5.1.3.3 *Car beds.* In the case of car beds, all portions of the test dummy's head and torso shall be retained within the confines of the car bed.

S5.1.4 *Back support angle.* When a rear-facing child restraint system is tested in accordance with S6.1, the angle between the system's back support surface for the child and the vertical shall not exceed 70 degrees.

S5.2 *Force distribution.*

S5.2.1 *Minimum head support surface—child restraints other than car beds.*

S5.2.1.1 Except as provided in S5.2.1.2, each child restraint system other than a car bed shall provide restraint

against rearward movement of the head of the child (rearward in relation to the child) by means of a continuous seat back which is an integral part of the system and which—

(a) Has a height, measured along the system seat back surface for the child in the vertical longitudinal plane passing through the longitudinal centerline of the child restraint systems from the lowest point on the system seating surface that is contacted by the buttocks of the seated dummy, as follows:

Weight [1] (in pounds)	Height [2] (in inches)
Less than 20 lb	18
20 lb or more, but not more than 40 lb	20
More than 40 lb	22

[1] When a child restraint system is recommended under S5.5(f) for use by children of the above weights.
[2] The height of the portion of the system seat back providing head restraint shall not be less than the above.

(b) Has a width of not less than 8 inches, measured in the horizontal plane at the height specified in paragraph (a) of this section. Except that a child restraint system with side supports extending at least 4 inches forward from the padded surface of the portion of the restraint system provided for support of the child's head may have a width of not less than 6 inches, measured in the horizontal plane at the height specified in paragraph (a) of this section.

(c) Limits the rearward rotation of the test dummy head so that the angle between the head and torso of the dummy specified in S7. when tested in accordance with S6.1 is not more than 45 degrees greater than the angle between the head and torso after the dummy has been placed in the system in accordance with S6.1.2.3 and before the system is tested in accordance with S6.1.

S5.2.1.2 The applicability of the requirements of S5.2.1.1 to a front-facing child restraint, and the conformance of any child restraint other than a car bed to those requirements is determined using the largest of the test dummies specified in S7.1 for use in testing that restraint; provided, that the 6-year-old dummy described in subpart I of part 572 of this title is not used to determine the applicability of or compliance with S5.2.1.1. A front-facing child restraint system is not required to comply with S5.2.1.1 if the target point on either side of the dummy's head is below a horizontal plane tangent to the top of—

(a) The standard seat assembly, in the case of an add-on child restraint system, when the dummy is positioned in the system and the system is installed on the assembly in accordance with S6.1.2.

(b) The vehicle seat, in the case of a built-in child restraint system, when the system is activated and the dummy is positioned in the system in accordance with S6.1.2.

S5.2.2 *Torso impact protection.* Each child restraint system other than a car bed shall comply with the applicable requirements of S5.2.2.1 and S5.2.2.2.

S5.2.2.1(a) The system surface provided for the support of the child's back shall be flat or concave and have a continuous surface area of not less than 85 square inches.

(b) Each system surface provided for support of the side of the child's torso shall be flat or concave and have a continuous surface of not less than 24 square inches for systems recommended for children weighing 20 pounds or more, or 48 square inches for systems recommended for children weighing less than 20 pounds.

(c) Each horizontal cross section of each system surface designed to restrain forward movement of the child's torso shall be flat or concave and each vertical longitudinal cross section shall be flat or convex with a radius of curvature of the underlying structure of not less than 2 inches.

S5.2.2.2 Each forward-facing child restraint system shall have no fixed or movable surface—

(a) Directly forward of the dummy and intersected by a horizontal line—

(1) Parallel to the SORL, in the case of the add-on child restraint system, or

(2) Parallel to a vertical plane through the longitudinal center line of the vehicle seat, in the case of a built-in child restraint system, and,

(b) Passing through any portion of the dummy, except for surfaces which restrain the dummy when the system is tested in accordance with S6.1.2(a)(2), so that the child restraint system shall conform to the requirements of S5.1.2 and S5.1.3.1.

S5.2.3 *Head impact protection.*

S5.2.3.1 Each child restraint system, other than a child harness, which is recommended under S5.5.2(f) for children whose masses are less than 10 kg, shall comply with S5.2.3.2.

S5.2.3.2 Each system surface, except for protrusions that comply with S5.2.4, which is contactable by the dummy head when the system is tested in accordance with S6.1 shall be covered with slow recovery, energy absorbing material with the following characteristics:

(a) A 25 percent compression-deflection resistance of not less than 0.5 and not more than 10 pounds per square inch when tested in accordance with S6.3.

(b) A thickness of not less than ½ inch for materials having a 25 percent compression-deflection resistance of not less than 1.8 and not more than 10 pounds per square inch when tested in accordance with S6.3. Materials having a 25 percent compression-deflection resistance of less than 1.8 pounds per square inch shall have a thickness of not less than ¾ inch.

S5.2.4 *Protrusion limitation.* Any portion of a rigid structural component within or underlying a contactable surface, or any portion of a child restraint system surface that is subject to the requirements of S5.2.3 shall, with any padding or other flexible overlay material removed, have a height above any immediately adjacent restraint system surface of not more than ⅜ inch and no exposed edge with a radius of less than ¼ inch.

S5.3 *Installation.*

S5.3.1 Except for components designed to attach to a child restraint anchorage system, each add-on child restraint system shall not have any means designed for attaching the system to a vehicle seat cushion or vehicle seat back and any component (except belts) that is designed to be inserted between the vehicle seat cushion and vehicle seat back.

S5.3.2 Each add-on child restraint system shall be capable of meeting the requirements of this standard when installed on the vehicle seating assembly solely by each of the means indicated in the following table for the particular type of child restraint system:

Type of add-on child restraint system	Means of installation			
	Type 1 seat belt assembly	Type 1 seat belt assembly plus a tether anchorage, if needed	Child restraint anchorage system (effective September 1, 2002)	Type II seat belt assembly
Harnesses		X		
Car beds	X			
Rear-facing restraints	X		X	
Belt-positioning seats				X
All other child restraints	X	X	X	

S5.3.3 *Car beds.* Each car bed shall be designed to be installed on a vehicle seat so that the car bed's longitudinal axis is perpendicular to a vertical longitudinal plane through the longitudinal axis of the vehicle.

S5.4 *Belts, belt buckles, and belt webbing.*

S5.4.1 *Performance requirements.* The webbing of belts provided with a child restrain system and used to attach the system to the vehicle or to restrain the child within the system shall—

(a) After being subjected to abrasion as specified in S5.1(d) or S5.3(c) of FMVSS 209 (§571.209), have a breaking strength of not less than 75 percent of the strength of the unabraded webbing when tested in accordance with S5.1(b) of FMVSS 209.

(b) Meet the requirements of S4.2 (e) and (f) of FMVSS No. 209 (§571.209); and

(c) If contactable by the test dummy torso when the system is tested in accordance with S6.1, have a width of not less than 1½ inches when measured in accordance with S5.4.1.1.

S5.4.1.1 *Width test procedure.* Condition the webbing for 24 hours in an atmosphere of any relative humidity between 48 and 67 percent, and any ambient temperature between 70° and 77 °F. Measure belt webbing width under a tension of 5 pounds applied lengthwise.

S5.4.2 *Belt buckles and belt adjustment hardware.* Each belt buckle and item of belt adjustment hardware used in a child restraint system shall conform to the requirements of S4.3(a) and S4.3(b) of FMVSS No. 209 (§ 571.209).

S5.4.3 *Belt Restraint.*

S5.4.3.1 *General.* Each belt that is part of a child restraint system and that is designed to restrain a child using the system shall be adjustable to snugly fit any child whose height and weight are within the ranges recommended in accordance with S5.5.2(f) and who is positioned in the system in accordance with the instructions required by S5.6.

S5.4.3.2 *Direct restraint.* Except for a child restraint system whose mass is less than 4.4 kg, each belt that is part of a child restraint system and that is designed to restrain a child using the system and to attach the system to the vehicle, and each Type I and lap portion of a Type II vehicle belt that is used to attach the system to the vehicle shall, when tested in accordance with S6.1, impose no loads on the child that result from the mass of the system, or

(a) In the case of an add-on child restraint system, from the mass of the seat back of the standard seat assembly specified in S6.1, or

(b) In the case of a built-in child restraint system, from the mass of any part of the vehicle into which the child restraint system is built.

S5.4.3.3 *Seating systems.* Except for child restraint systems subject to S5.4.3.4, each child restraint system that is designed for use by a child in a seated position and that has belts designed to restrain the child, shall, with the test dummy specified in S7 positioned in the system in accordance with S10 provide:

(a) Upper torso restraint in the form of:

(i) Belts passing over each shoulder of the child, or

(ii) A fixed or movable surface that complies with S5.2.2.1(c), and

(b) Lower torso restraint in the form of:

(i) A lap belt assembly making an angle between 45° and 90° with the child restraint seating surface at the lap belt attachment points, or

(ii) A fixed or movable surface that complies with S5.2.2.1(c), and

(c) In the case of each seating system recommended for children whose masses are more than 10 kg, crotch restraint in the form of:

(i) A crotch belt connectable to the lap belt or other device used to restrain the lower torso, or

(ii) A fixed or movable surface that complies with S5.2.2.1(c).

S5.4.3.4 *Harnesses.* Each child harness shall:

(a) Provide upper torso restraint, including belts passing over each shoulder of the child;

(b) Provide lower torso restraint by means of lap and crotch belt; and

(c) Prevent a child of any height for which the restraint is recommended for use pursuant to S5.5.2(f) from standing upright on the vehicle seat when the child is placed in the device in accordance with the instructions required by S5.6.

S5.4.3.5 *Buckle release.* Any buckle in a child restraint system belt assembly designed to restrain a child using the system shall:

(a) When tested in accordance with S6.2.1 prior to the dynamic test of S6.1, not release when a force of less than 40 newtons (N) is applied and shall release when a force of not more than 62 N is applied;

(b) After the dynamic test of S6.1, when tested in accordance with the appropriate sections of S6.2, release when a force of not more than 71 N is applied, provided, however, that the conformance of any child restraint to this requirement is determined using the largest of the test dummies specified in S7 for use in testing that restraint when the restraint is facing forward, rearward, and/or laterally;

(c) Meet the requirements of S4.3(d)(2) of FMVSS No. 209 (§ 571.209), except that the minimum surface area for child restraint buckles designed for

push button application shall be 0.6 square inch;

(d) Meet the requirements of S4.3(g) of FMVSS No. 209 (§571.209) when tested in accordance with S5.2(g) of FMVSS No. 209; and

(e) Not release during the testing specified in S6.1.

S5.5 *Labeling*.

S5.5.1 Each add-on child restraint system shall be permanently labeled with the information specified in S5.5.2 (a) through (m).

S5.5.2 The information specified in paragraphs (a) through (m) of this section shall be stated in the English language and lettered in letters and numbers that are not smaller than 10 point type and are on a contrasting background.

(a) The model name or number of the system.

(b) The manufacturer's name. A distributor's name may be used instead if the distributor assumes responsibility for all duties and liabilities imposed on the manufacturer with respect to the system by the National Traffic and Motor Vehicle Safety Act, as amended.

(c) The statement: ''Manufactured in ____,'' inserting the month and year of manufacture.

(d) The place of manufacture (city and State, or foreign country). However, if the manufacturer uses the name of the distributor, then it shall state the location (city and State, or foreign country) of the principal offices of the distributor.

(e) The statement: ''This child restraint system conforms to all applicable Federal motor vehicle safety standards.''

(f) One of the following statements, inserting the manufacturer's recommendations for the maximum mass and height of children who can safely occupy the system, except that booster seats shall not be recommended for children whose masses are less than 13.6 kg:

(1) This infant restraint is designed for use by children who weigh _____ pounds (_____ kg) or less and whose height is (*insert values in English and metric units; use of word ''mass'' in label is optional*) or less; or

(2) This child restraint is designed for use only by children who weigh between _____ and _____ pounds (*insert appropriate metric values; use of word ''mass'' is optional*) and whose height is (*insert appropriate values in English and metric units*) or less and who are capable of sitting upright alone; or

(3) This child restraint is designed for use only by children who weigh between _____ and _____ pounds (*insert appropriate metric values; use of word ''mass'' is optional*) and whose height is between _____ and _____ inches (*insert appropriate values in English and metric units*).

(g) The following statement, inserting the location of the manufacturer's installation instruction booklet or sheet on the restraint:

WARNING! FAILURE TO FOLLOW EACH OF THE FOLLOWING INSTRUCTIONS CAN RESULT IN YOUR CHILD STRIKING THE VEHICLE'S INTERIOR DURING A SUDDEN STOP OR CRASH.
SECURE THIS CHILD RESTRAINT WITH A VEHICLE BELT AS SPECIFIED IN THE MAUFACTURER'S INSTRUCTIONS LOCATED____.

(h) In the case of each child restraint system that has belts designed to restrain children using them:

SNUGLY ADJUST THE BELTS PROVIDED WITH THIS CHILD RESTRAINT AROUND YOUR CHILD.

(i)(1) For a booster seat that is recommended for use with either a vehicle's Type I or Type II seat belt assembly, one of the following statements, as appropriate:

(i) WARNING! USE ONLY THE VEHICLE'S LAP AND SHOULDER BELT SYSTEM WHEN RESTRAINING THE CHILD IN THIS BOOSTER SEAT; or,

(ii) WARNING! USE ONLY THE VEHICLE'S LAP BELT SYSTEM, OR THE LAP BELT PART OF A LAP/SHOULDER BELT SYSTEM WITH THE SHOULDER BELT PLACED BEHIND THE CHILD, WHEN RESTRAINING THE CHILD IN THIS SEAT.

(2)(i) Except as provided in paragraph (i)(2)(ii) of this section, for a booster seat which is recommended for use with both a vehicle's Type I and Type II seat belt assemblies, the following statement:

WARNING! USE ONLY THE VEHICLE'S LAP BELT SYSTEM, OR THE LAP BELT PART OF A LAP/SHOULDER BELT SYSTEM WITH THE SHOULDER BELT PLACED BEHIND THE CHILD, WHEN RESTRAINING THE CHILD WITH THE *insert description of*

the system element provided to restrain forward movement of the child's torso when used with a lap belt (e.g., shield), AND ONLY THE VEHICLE'S LAP AND SHOULDER BELT SYSTEM WHEN USING THIS BOOSTER WITHOUT THE *insert above description.*

(ii) A booster seat which is recommended for use with both a vehicle's Type I and Type II seat belt assemblies is not subject to S5.5.2(i)(2)(i) if, when the booster is used with the shield or similar component, the booster will cause the shoulder belt to be located in a position other than in front of the child when the booster is installed. However, such a booster shall be labeled with a warning to use the booster with the vehicle's lap and shoulder belt system when using the booster without a shield.

(j) In the case of each child restraint system equipped with an anchorage strap, the statement:

SECURE THE TOP ANCHORAGE STRAP PROVIDED WITH THIS CHILD RESTRAINT AS SPECIFIED IN THE MANUFACTURER'S INSTRUCTIONS.

(k) At the manufacturer's option, child restraint systems manufactured before May 27, 1997 may comply with the requirements of S5.5.2(k)(4) or S5.5.2(k)(5) as appropriate, instead of the requirements of S5.5.2(k)(1)(ii) or S5.5.2(k)(2)(ii).

(1) In the case of each rear-facing child restraint system that is designed for infants only, the following statements—

(i) ''PLACE THIS INFANT RESTRAINT IN A REAR-FACING POSITION WHEN USING IT IN THE VEHICLE.''

(ii) ''*WARNING:* DO NOT PLACE THIS RESTRAINT IN THE FRONT SEAT OF A VEHICLE THAT HAS A PASSENGER SIDE AIR BAG. (*insert a statement that describes the consequences of not following the warning.*)

(2) In the case of a child restraint system that is designed to be used rearward-facing for infants and forward facing for older children, the following statements—

(i) ''PLACE THIS CHILD RESTRAINT IN A REAR-FACING POSITION WHEN USING IT WITH AN INFANT WEIGHING LESS THAN (*insert a recommended weight that is not less than 20 pounds*).''

(ii) ''*WARNING:* WHEN THIS RESTRAINT IS USED REAR-FACING, DO NOT PLACE IT IN THE FRONT SEAT OF A VEHICLE THAT HAS A PASSENGER SIDE AIR BAG. (*Insert a statement that describes the consequences of not following the warning.*)''

(3) The statements required by paragraphs (k)(1)(ii) and (k)(2)(ii) shall be on a red, orange or yellow contrasting background, and placed on the restraint so that it is on the side of the restraint designed to be adjacent to the front passenger door of a vehicle and is visible to a person installing the rear-facing child restraint system in the front passenger seat.

(4) Except as provided in (k)(5) of this section, in the case of each child restraint system that can be used in a rear-facing position and is manufactured on or after May 27, 1997, instead of the warning specified in S5.5.2(k)(1)(ii) or S5.5.2(k)(2)(ii) of this standard, a label that conforms in content to Figure 10 and to the requirements of S5.5.2(k)(4)(i) through S5.5.2(k)(4)(iii) of this standard shall be permanently affixed to the outer surface of the cushion or padding in or adjacent to the area where a child's head would rest, so that the label is plainly visible and easily readable.

(i) The heading area shall be yellow with the word ''warning'' and the alert symbol in black.

(ii) The message area shall be white with black text. The message area shall be no less than 30 square cm.

(iii) The pictogram shall be black with a red circle and slash on a white background. The pictogram shall be no less than 30 mm in diameter.

(5) If a child restraint system is equipped with a device that deactivates the passenger-side air bag in a vehicle when and only when the child restraint is installed in the vehicle and provides a signal, for at least 60 seconds after deactivation, that the air bag is deactivated, the label specified in Figure 10 may include the phrase ''unless air bag is off'' after ''on front seat with air bag.''

(l) An installation diagram showing the child restraint system installed in:

(1) A seating position equipped with a continuous-loop lap/shoulder belt; and

(2) A seating position equipped with only a lap belt, as specified in the manufacturer's instructions.

(m) The following statement, inserting an address and telephone number:

''Child restraints could be recalled for safety reasons. You must register this restraint to be reached in a recall. Send your name, address and the restraint's model number and manufacturing date to (*insert address*) or call (*insert telephone number*). For recall information, call the U.S. Government's Auto Safety Hotline at 1–800–424–9393 (202–366–0123 in DC area).''

(n) Child restraint systems, other than belt-positioning seats, harnesses and backless child restraint systems, may be certified as complying with the provisions of S8. Child restraints that are so certified shall be labeled with the statement ''This Restraint is Certified for Use in Motor Vehicles and Aircraft.'' Belt-positioning seats, harnesses and backless child restraint systems shall be labeled with the statement ''This Restraint is Not Certified for Use in Aircraft.'' The statement required by this paragraph shall be in red lettering and shall be placed after the certification statement required by S5.5.2(e).

S5.5.3 The information specified in S5.5.2 (g) through (k) shall be located on the add-on child restraint system so that it is visible when the system is installed as specified in S5.6.1.

S5.5.4 (a) Each built-in child restraint system other than a factory-installed built-in restraint shall be permanently labeled with the information specified in S5.5.5 (a) through (l). The information specified in S5.5.5(a) through (j) and in S5.5.5(l) shall be visible when the system is activated for use.

(b) Each factory-installed built-in child restraint shall be permanently labeled with the information specified in S5.5.5(f) through (j) and S5.5.5(l), so that the information is visible when the restraint is activated for use. The information shall also be included in the vehicle owner's manual.

S5.5.5 The information specified in paragraphs (a) through (l) of this section that is required by S5.5.4 shall be in English and lettered in letters and numbers that are not smaller than 10-point type and are on a contrasting background.

(a) The model name or number of the system.

(b) The manufacturer's name. A distributor's or dealer's name may be used instead if the distributor or dealer assumes responsibility for all duties and liabilities imposed on the manufacturer with respect to the system by the National Traffic and Motor Vehicle Safety Act, as amended.

(c) The statement: ''Manufactured in _____,'' inserting the month and year of manufacture.

(d) The place of manufacture (city and State, or foreign country). However, if the manufacturer uses the name of the distributor or dealer, then it shall state the location (city and State, or foreign country) of the principal offices of the distributor or dealer.

(e) The statement: ''This child restraint system conforms to all applicable Federal motor vehicle safety standards.''

(f) One of the following statements, inserting the manufacturer's recommendations for the maximum mass and height of children who can safely occupy the system, except that booster seats shall not be recommended for children whose masses are less than 13.6 kg:

(1) This infant restraint is designed for use by children who weigh _____ pounds (_____ kg) or less and whose height is (*insert values in English and metric units; use of word ''mass'' in label is optional*); or

(2) This child restraint is designed for use only by children who weigh between _____ and_____ pounds (*insert appropriate metric values; use of word ''mass'' is optional*) and whose height is (*insert appropriate values in English and metric units*) or less and who are capable of sitting upright alone; or

(3) This child restraint is designed for use only by children who weigh between _____ and _____ pounds (*insert appropriate metric values; use of word ''mass'' is optional*) and whose height is between _____ and _____ inches (*insert appropriate values in English and metric units*).

(g) The statement specified in paragraph (1), and if appropriate, the statement in paragraph (2):

(1) WARNING! FAILURE TO FOLLOW THE MANUFACTURER'S INSTRUCTIONS

ON THE USE OF THIS CHILD RESTRAINT SYSTEM CAN RESULT IN YOUR CHILD STRIKING THE VEHICLE'S INTERIOR DURING A SUDDEN STOP OR CRASH.

(2) In the case of each built-in child restraint system which is not intended for use in the motor vehicle in certain adjustment positions or under certain circumstances, an appropriate statement of the manufacturer's restrictions regarding those positions or circumstances, in capitalized letters.

(h) In the case of each built-in child restraint system that has belts designed to restrain children using them:

SNUGLY ADJUST THE BELTS PROVIDED WITH THIS CHILD RESTRAINT AROUND YOUR CHILD.

(i) In the case of each built-in child restraint which can be used in a rear-facing position, the following statement:

PLACE AN INFANT IN A REAR-FACING POSITION IN THIS CHILD RESTRAINT.

(j) A diagram or diagrams showing the fully activated child restraint system in infant and/or child configurations.

(k) The following statement, inserting an address and telephone number: ''Child restraints could be recalled for safety reasons. You must register this restraint to be reached in a recall. Send your name, address and the restraint's model number and manufacturing date to (*insert address*) or call (*insert telephone number*). For recall information, call the U.S. Government's Auto Safety Hotline at 1–800–424–9393 (202–366–0123 in DC area).''

(l) In the case of a built-in belt-positioning seat that uses either the vehicle's Type I or Type II belt systems or both, a statement describing the manufacturer's recommendations for the maximum height and weight of children who can safely occupy the system and how the booster should be used (e.g., with or without shield) with the different vehicle belt systems.

S5.6 *Printed Instructions for Proper Use*.

S5.6.1 *Add-on child restraint systems*. Each add-on child restraint system shall be accompanied by printed installation instructions in English that provide a step-by-step procedure, including diagrams, for installing the system in motor vehicles, securing the system in the vehicles, positioning a child in the system, and adjusting the system to fit the child. For each child restraint system that has components for attaching to a tether anchorage or a child restraint anchorage system, the installation instructions shall include a step-by-step procedure, including diagrams, for properly attaching to that anchorage or system.

S5.6.1.1 In a vehicle with rear designated seating positions, the instructions shall alert vehicle owners that, according to accident statistics, children are safer when properly restrained in the rear seating positions than in the front seating positions.

S5.6.1.2 The instructions shall specify in general terms the types of vehicles, the types of seating positions, and the types of vehicle safety belts with which the add-on child restraint system can or cannot be used.

S5.6.1.3 The instructions shall explain the primary consequences of not following the warnings required to be labeled on the child restraint system in accordance with S5.5.2 (g) through (k).

S5.6.1.4 The instructions for each car bed shall explain that the car bed should position in such a way that the child's head is near the center of the vehicle.

S5.6.1.5 The instructions shall state that add-on child restraint systems should be securely belted to the vehicle, even when they are not occupied, since in a crash an unsecured child restraint system may injure other occupants.

S5.6.1.6 Each add-on child restraint system shall have a location on the restraint for storing the manufacturer's instructions.

S5.6.1.7 The instructions shall include the following statement, inserting an address and telephone number: ''Child restraints could be recalled for safety reasons. You must register this restraint to be reached in a recall. Send your name, address and the restraint's model number and manufacturing date to (*insert address*) or call (*insert telephone number*). For recall information, call the U.S. Government's Auto Safety Hotline at 1–800–424–9393 (202–366–0123 in DC area).''

S5.6.1.8 In the case of each child restraint system that can be used in a position so that it is facing the rear of the vehicle, the instructions shall provide a warning against using rear-facing restraints at seating positions equipped with air bags, and shall explain the reasons for, and consequences of not following the warning. The instructions shall also include a statement that owners of vehicles with front passenger side air bags should refer to their vehicle owner's manual for child restraint installation instructions.

S5.6.1.9 In the case of each rear-facing child restraint system that has a means for repositioning the seating surface of the system that allows the system's occupant to move from a reclined position to an upright position during testing, the instructions shall include a warning against impeding the ability of the restraint to change adjustment position.

S5.6.1.10(a) For instructions for a booster seat that is recommended for use with either a vehicle's Type I or Type II seat belt assembly, one of the following statements, as appropriate, and the reasons for the statement:

(i) WARNING! USE ONLY THE VEHICLE'S LAP AND SHOULDER BELT SYSTEM WHEN RESTRAINING THE CHILD IN THIS BOOSTER SEAT; or,

(ii) WARNING! USE ONLY THE VEHICLE'S LAP BELT SYSTEM, OR THE LAP BELT PART OF A LAP/SHOULDER BELT SYSTEM WITH THE SHOULDER BELT PLACED BEHIND THE CHILD, WHEN RESTRAINING THE CHILD IN THIS SEAT.

(b)(i) Except as provided in S5.6.1.10(b)(ii), the instructions for a booster seat that is recommended for use with both a vehicle's Type I and Type II seat belt assemblies shall include the following statement and the reasons therefor:

WARNING! USE ONLY THE VEHICLE'S LAP BELT SYSTEM, OR THE LAP BELT PART OF A LAP/SHOULDER BELT SYSTEM WITH THE SHOULDER BELT PLACED BEHIND THE CHILD, WHEN RESTRAINING THE CHILD WITH THE *insert description of the system element provided to restrain forward movement of the child's torso when used with a lap belt (e.g., shield)*, AND ONLY THE VEHICLE'S LAP AND SHOULDER BELT SYSTEM WHEN USING THIS BOOSTER WITHOUT THE *insert above description*.

(ii) A booster seat which is recommended for use with both a vehicle's Type I and Type II seat belt assemblies is not subject to S5.6.1.10(b)(i) if, when the booster is used with the shield or similar component, the booster will cause the shoulder belt to be located in a position other than in front of the child when the booster is installed. However, the instructions for such a booster shall include a warning to use the booster with the vehicle's lap and shoulder belt system when using the booster without a shield.

(c) The instructions for belt-positioning seats shall include the statement, ''This restraint is not certified for aircraft use,'' and the reasons for this statement.

S5.6.2 *Built-in child restraint systems.* (a) Each built-in child restraint system shall be accompanied by printed instructions in English that provide a step-by-step procedure, including diagrams, for activating the restraint system, positioning a child in the system, adjusting the restraint and, if provided, the restraint harness to fit the child. The instructions for each built-in car bed shall explain that the child should be positioned in the bed in such a way that the child's head is near the center of the vehicle.

(b) Each motor vehicle equipped with a factory-installed built-in child restraint shall have the information specified in paragraph (a) of this section included in its vehicle owner's manual.

S5.6.2.1 The instructions shall explain the primary consequences of not following the manufacturer's warnings for proper use of the child restraint system in accordance with S5.5.5 (f) through (i).

S5.6.2.2 The instructions for each built-in child restraint system other than a factory-installed restraint, shall include the following statement, inserting an address and telephone number: ''Child restraints could be recalled for safety reasons. You must register this restraint to be reached in a recall. Send your name, address and the restraint's model number and manufacturing date to (*insert address*) or call (*insert telephone number*). For recall information, call the U.S. Government's

Auto Safety Hotline at 1–800–424–9393 (202–366–0123 in DC area).''

S5.6.2.3. Each built-in child restraint system other than a factory-installed built-in restraint, shall have a location on the restraint for storing the instructions.

S5.6.3 Each built-in child restraint system, other than a system that has been installed in a vehicle or a factory-installed built-in system that is designed for a specific vehicle model and seating position, shall be accompanied by instructions in English that provide a step-by-step procedure for installing the system in a motor vehicle. The instructions shall specify the types of vehicles and the seating positions into which the restraint can or cannot be installed. The instructions for each car bed shall explain that the bed should be installed so that the child's head will be near the center of the vehicle.

S5.6.4 In the case of a built-in belt-positioning seat that uses either the vehicle's Type I or Type II belt systems or both, the instructions shall include a statement describing the manufacturer's recommendations for the maximum height and weight of children who can safely occupy the system and how the booster must be used with the vehicle belt systems appropriate for the booster seat. The instructions shall explain the consequences of not following the directions. The instructions shall specify that, if the booster seat is recommended for use with only the lap-belt part of a Type II assembly, the shoulder belt portion of the assembly must be placed behind the child.

S5.7 *Flammability*. Each material used in a child restraint system shall conform to the requirements of S4 of FMVSS No. 302 (571.302). In the case of a built-in child restraint system, the requirements of S4 of FMVSS No. 302 shall be met in both the ''in-use'' and ''stowed'' positions.

S5.8 Information requirements—registration form.

(a) Each child restraint system, except a factory-installed built-in restraint system, shall have a registration form attached to any surface of the restraint that contacts the dummy when the dummy is positioned in the system in accordance with S6.1.2 of Standard 213.

(b) Each form shall:

(1) Consist of a postcard that is attached at a perforation to an informational card;

(2) Conform in size, content and format to Figures 9a and 9b of this section; and

(3) Have a thickness of at least 0.007 inches and not more than 0.0095 inches.

(c) Each postcard shall provide the model name or number and date of manufacture (month, year) of the child restraint system to which the form is attached, shall contain space for the purchaser to record his or her name and mailing address, shall be addressed to the manufacturer, and shall be postage paid. No other information shall appear on the postcard, except identifying information that distinguishes a particular child restraint system from other systems of that model name or number may be preprinted in the shaded area of the postcard, as shown in figure 9a.

S5.9 *Attachment to child restraint anchorage system.*

(a) Each add-on child restraint system manufactured on or after September 1, 2002, other than a car bed, harness and belt-positioning seat, shall have components permanently attached to the system that enable the restraint to be securely fastened to the lower anchorages of the child restraint anchorage system specified in Standard No. 225 (§ 571.225) and depicted in Drawing Package 100–1000 with Addendum A: Seat Base Weldment (consisting of drawings and a bill of materials) dated October 23, 1998, (incorporated by reference; see § 571.5). The components must be attached such that they can only be removed by use of a tool, such as a screwdriver. In the case of rear-facing child restraints with detachable bases, only the base is required to have the components.

(b) In the case of each child restraint system that is manufactured on or after September 1, 1999 and that has components for attaching the system to a tether anchorage, those components shall include a tether hook that conforms to the configuration and geometry specified in Figure 11 of this standard.

(c) In the case of each child restraint system that is manufactured on or

after September 1, 1999 and that has components, including belt webbing, for attaching the system to a tether anchorage or to a child restraint anchorage system, the belt webbing shall be adjustable so that the child restraint can be tightly attached to the vehicle.

(d) Beginning September 1, 1999, each child restraint system with components that enable the restraint to be securely fastened to the lower anchorages of a child restraint anchorage system, other than a system with hooks for attaching to the lower anchorages, shall provide either an indication when each attachment to the lower anchorages becomes fully latched or attached, or a visual indication that all attachments to the lower anchorages are fully latched or attached. Visual indications shall be detectable under normal daylight lighting conditions.

S6. *Test conditions and procedures.*

S6.1 *Dynamic systems test for child restraint systems.*

The test conditions described in S6.1.1 apply to the dynamic systems test. The test procedure for the dynamic systems test is specified in S6.1.2. The test dummy specified in S7 is placed in the test specimen (child restraint), clothed as described in S9 and positioned according to S10.

S6.1.1 *Test conditions.*

(a) *Test devices.*

(1) The test device for add-on restraint systems is a standard seat assembly consisting of a simulated vehicle bench seat, with three seating positions, which is described in Drawing Package SAS–100–1000 with Addendum A: Seat Base Weldment (consisting of drawings and a bill of materials) dated October 23, 1998, (incorporated by reference; see §571.5). The assembly is mounted on a dynamic test platform so that the center SORL of the seat is parallel to the direction of the test platform travel and so that movement between the base of the assembly and the platform is prevented.

(2) The test device for built-in child restraint systems is either the specific vehicle shell or the specific vehicle.

(i) *Specific vehicle shell.*

(A) The specific vehicle shell, if selected for testing, is mounted on a dynamic test platform so that the longitudinal center line of the shell is parallel to the direction of the test platform travel and so that movement between the base of the shell and the platform is prevented. Adjustable seats are in the adjustment position midway between the forwardmost and rearmost positions, and if separately adjustable in a vertical direction, are at the lowest position. If an adjustment position does not exist midway between the forwardmost and rearmost position, the closest adjustment position to the rear of the midpoint is used. Adjustable seat backs are in the manufacturer's nominal design riding position. If such a position is not specified, the seat back is positioned so that the longitudinal center line of the child test dummy's neck is vertical, and if an instrumented test dummy is used, the accelerometer surfaces in the dummy's head and thorax, as positioned in the vehicle, are horizontal. If the vehicle seat is equipped with adjustable head restraints, each is adjusted to its highest adjustment position.

(B) The platform is instrumented with an accelerometer and data processing system having a frequency response of 60 Hz channel class as specified in Society of Automotive Engineers Recommended Practice J211 JUN80 ''Instrumentation for Impact Tests.'' The accelerometer sensitive axis is parallel to the direction of test platform travel.

(ii) *Specific vehicle.* For built-in child restraint systems, an alternate test device is the specific vehicle into which the built-in system is fabricated. The following test conditions apply to this alternate test device.

(A) The vehicle is loaded to its unloaded vehicle weight plus its rated cargo and luggage capacity weight, secured in the luggage area, plus the appropriate child test dummy and, at the vehicle manufacturer's option, an anthropomorphic test dummy which conforms to the requirements of subpart B or subpart E of part 572 of this title for a 50th percentile adult male dummy placed in the front outboard seating position. If the built-in child restraint system is installed at one of the seating positions otherwise requiring the placement of a part 572 test dummy, then in the frontal barrier

crash specified in (c), the appropriate child test dummy shall be substituted for the part 572 adult dummy, but only at that seating position. The fuel tank is filled to any level from 90 to 95 percent of capacity.

(B) Adjustable seats are in the adjustment position midway between the forward-most and rearmost positions, and if separately adjustable in a vehicle direction, are at the lowest position. If an adjustment position does not exist midway between the forward-most and rearmost positions, the closest adjustment position to the rear of the midpoint is used.

(C) Adjustable seat backs are in the manufacturer's nominal design riding position. If a nominal position is not specified, the seat back is positioned so that the longitudinal center line of the child test dummy's neck is vertical, and if an anthropomorphic test dummy is used, the accelerometer surfaces in the test dummy's head and thorax, as positioned in the vehicle, are horizontal. If the vehicle is equipped with adjustable head restraints, each is adjusted to its highest adjustment position.

(D) Movable vehicle windows and vents are, at the manufacturer's option, placed in the fully closed position.

(E) Convertibles and open-body type vehicles have the top, if any, in place in the closed passenger compartment configuration.

(F) Doors are fully closed and latched but not locked.

(G) All instrumentation and data reduction is in conformance with SAE J211 JUN80.

(b) The tests are frontal barrier impact simulations of the test platform or frontal barrier crashes of the specific vehicles as specified in S5.1 of § 571.208 and for:

(1) Test Configuration I, are at a velocity change of 48 km/h with the acceleration of the test platform entirely within the curve shown in Figure 2, or for the specific vehicle test with the deceleration produced in a 48 km/h frontal barrier crash.

(2) Test Configuration II, are set at a velocity change of 32 km/h with the acceleration of the test platform entirely within the curve shown in Figure 3, or for the specific vehicle test, with the deceleration produced in a 32 km/h frontal barrier crash.

(c) As illustrated in Figures 1A and 1B of this standard, attached to the seat belt anchorage points provided on the standard seat assembly are Type 1 seat belt assemblies in the case of add-on child restraint systems other than belt-positioning seats, or Type 2 seat belt assemblies in the case of belt-positioning seats. These seat belt assemblies meet the requirements of Standard No. 209 (§ 571.209) and have webbing with a width of not more than 2 inches, and are attached to the anchorage points without the use of retractors or reels of any kind. As illustrated in Figures 1A'' and 1B'' of this standard, attached to the standard seat assembly is a child restraint anchorage system conforming to the specifications of Standard No. 225 (§ 571.225), in the case of add-on child restraint systems other than belt-positioning booster seats.

(d) Performance tests under S6.1 are conducted at any ambient temperature from 19 °C to 26 °C and at any relative humidity from 10 percent to 70 percent.

(e) In the case of add-on child restraint systems, the restraint shall meet the requirements of S5 at each of its seat back angle adjustment positions and restraint belt routing positions, when the restraint is oriented in the direction recommended by the manufacturer (e.g., forward, rearward or laterally) pursuant to S5.6, and tested with the test dummy specified in S7.

S6.1.2 *Dynamic test procedure.*

(a) Activate the built-in child restraint or attach the add-on child restraint to the seat assembly as described below:

(1) *Test configuration I.*

(i) *Child restraints other than belt-positioning seats.* Attach the child restraint in any of the following manners specified in S6.1.2(a)(1)(i)(A) through (D), unless otherwise specified in this standard.

(A) Install the child restraint system at the center seating position of the standard seat assembly, in accordance with the manufacturer's instructions provided with the system pursuant to S5.6.1, except that the standard lap belt is used and, if provided, a tether strap may be used.

(B) Except for a child harness, a backless child restraint system with a tether strap, and a restraint designed for use by physically handicapped children, install the child restraint system at the center seating position of the standard seat assembly as in S6.1.2(a)(1)(i)(A), except that no tether strap (or any other supplemental device) is used.

(C) Install the child restraint system using the child restraint anchorage system at the center seating position of the standard seat assembly in accordance with the manufacturer's instructions provided with the system pursuant to S5.6.1. The tether strap, if one is provided, is attached to the tether anchorage.

(D) Install the child restraint system using only the lower anchorages of the child restraint anchorage system as in S6.1.2(a)(1)(i)(C). No tether strap (or any other supplemental device) is used.

(ii) *Belt-positioning seats.* A belt-positioning seat is attached to either outboard seating position of the standard seat assembly in accordance with the manufacturer's instructions provided with the system pursuant to S5.6.1 using only the standard vehicle lap and shoulder belt and no tether (or any other supplemental device).

(iii) In the case of each built-in child restraint system, activate the restraint in the specific vehicle shell or the specific vehicle, in accordance with the manufacturer's instructions provided in accordance with S5.6.2.

(2) *Test configuration II.* (i) In the case of each add-on child restraint system which is equipped with a fixed or movable surface described in S5.2.2.2, or a backless child restraint system with a top anchorage strap, install the add-on child restraint system at the center seating position of the standard seat assembly using only the standard seat lap belt to secure the system to the standard seat.

(ii) In the case of each built-in child restraint system which is equipped with a fixed or movable surface described in S5.2.2.2, or a built-in booster seat with a top anchorage strap, activate the system in the specific vehicle shell or the specific vehicle in accordance with the manufacturer's instructions provided in accordance with S5.6.2.

(b) Select any dummy specified in S7 for testing systems for use by children of the heights and weights for which the system is recommended in accordance with S5.5. The dummy is assembled, clothed and prepared as specified in S7 and S9 and Part 572 of this chapter, as appropriate.

(c) Place the dummy in the child restraint. Position it, and attach the child restraint belts, if appropriate, as specified in S10.

(d) *Belt adjustment.*

(1) *Add-on systems other than belt-positioning seats.*

(i) If appropriate, shoulder and pelvic belts that directly restrain the dummy shall be adjusted as follows: Tighten the belts until a 9 N force applied (as illustrated in figure 5) to the webbing at the top of each dummy shoulder and to the pelvic webbing 50 mm on either side of the torso midsagittal plane pulls the webbing 7 mm from the dummy.

(ii) All Type I belt systems used to attach an add-on child restraint system to the standard seat assembly, and any provided additional anchorage belt (tether), are tightened to a tension of not less than 53.5 N and not more than 67 N, as measured by a load cell used on the webbing portion of the belt.

(iii) When attaching a child restraint system to the tether anchorage and the child restraint anchorage system on the standard seat assembly, tighten all belt systems used to attach the restraint to the standard seat assembly to a tension of not less than 53.5 N and not more than 67 N, as measured by a load cell or other suitable means used on the webbing portion of the belt.

(2) *Add-on belt-positioning seats.*

(i) The lap portion of Type II belt systems used to attach the child restraint to the standard seat assembly is tightened to a tension of not less than 53.5 N and not more than 67 N, as measured by a load cell used on the webbing portion of the belt.

(ii) The shoulder portion of Type II belt systems used to restrain the dummy is tightened to a tension of not less than 9 N and not more than 18 N, as measured by a load cell used on the webbing portion of the belt.

(3) *Built-in child restraint systems.*

(i) The lap portion of Type II belt systems used to secure a dummy to the built-in child restraint system is tightened to a tension of not less than 53.5 N and not more than 67 N, as measured by a load cell used on the webbing portion of the belt.

(ii) The shoulder portion of Type II belt systems used to secure a child is tightened to a tension of not less than 9 N and not more than 18 N, as measured by a load cell used on the webbing portion of the belt.

(iii) If provided, and if appropriate to attach the child restraint belts under S10, shoulder (other than the shoulder portion of a Type II vehicle belt system) and pelvic belts that directly restrain the dummy shall be adjusted as follows: Tighten the belts until a 9 N force applied (as illustrated in figure 5) to the webbing at the top of each dummy shoulder and to the pelvic webbing 50 mm on either side of the torso midsagittal plane pulls the webbing 7 mm from the dummy.

(e) Accelerate the test platform to simulate frontal impact in accordance with Test Configuration I or II, as appropriate.

(f) Determine conformance with the requirements in S5.1.

S6.2 *Buckle release test procedure.*

The belt assembly buckles used in any child restraint system shall be tested in accordance with S6.2.1 through S6.2.4 inclusive.

S6.2.1 Before conducting the testing specified in S6.1, place the loaded buckle on a hard, flat, horizontal surface. Each belt end of the buckle shall be pre-loaded in the following manner. The anchor end of the buckle shall be loaded with a 9 N force in the direction away from the buckle. In the case of buckles designed to secure a single latch plate, the belt latch plate end of the buckle shall be pre-loaded with a 9 N force in the direction away from the buckle. In the case of buckles designed to secure two or more latch plates, the belt latch plate ends of the buckle shall be loaded equally so that the total load is 9 N, in the direction away from the buckle. For pushbutton-release buckles, the release force shall be applied by a conical surface (cone angle not exceeding 90 degrees). For pushbutton-release mechanisms with a fixed edge (referred to in Figure 7 as ''hinged button''), the release force shall be applied at the centerline of the button, 3 mm away from the movable edge directly opposite the fixed edge, and in the direction that produces maximum releasing effect. For pushbutton-release mechanisms with no fixed edge (referred to in Figure 7 as ''floating button''), the release force shall be applied at the center of the release mechanism in the direction that produces the maximum releasing effect. For all other buckle release mechanisms, the force shall be applied on the centerline of the buckle lever or finger tab in the direction that produces the maximum releasing effect. Measure the force required to release the buckle. Figure 7 illustrates the loading for the different buckles and the point where the release force should be applied, and Figure 8 illustrates the conical surface used to apply the release force to pushbutton-release buckles.

S6.2.2 After completion of the testing specified in S6.1 and before the buckle is unlatched, tie a self-adjusting sling to each wrist and ankle of the test dummy in the manner illustrated in Figure 4, without disturbing the belted dummy and the child restraint system.

S6.2.3 Pull the sling tied to the dummy restrained in the child restraint system and apply a force whose magnitude is: 50 N for a system tested with a newborn dummy; 90 N for a system tested with a 9-month-old dummy; 200 N for a system tested with a 3-year-old dummy; or 270 N for a system tested with a 6-year-old dummy. The force is applied in the manner illustrated in Figure 4 and as follows:

(a) *Add-on Child Restraints.* For an add-on child restraint other than a car bed, apply the specified force by pulling the sling horizontally and parallel to the SORL of the standard seat assembly. For a car bed, apply the force by pulling the sling vertically.

(b) *Built-in Child Restraints.* For a built-in child restraint other than a car bed, apply the force by pulling the sling parallel to the longitudinal center line of the specific vehicle shell or the specific vehicle. In the case of a car

bed, apply the force by pulling the sling vertically.

S6.2.4 While applying the force specified in S6.2.3, and using the device shown in Figure 8 for pushbutton-release buckles, apply the release force in the manner and location specified in S6.2.1, for that type of buckle. Measure the force required to release the buckle.

S6.3 *Head impact protection—energy absorbing material test procedure.*

S6.3.1 Prepare and test specimens of the energy absorbing material used to comply with S5.2.3 in accordance with the applicable 25 percent compression-deflection test described in the American Society for Testing and Materials (ASTM) Standard D1056–73, ''Standard Specification for Flexible Cellular Materials—Sponge or Expanded Rubber,'' or D1564–71 ''Standard Method of Testing Flexible Cellular Materials—Slab Urethane Foam'' or D1565–76 ''Standard Specification for Flexible Cellular Materials—Vinyl Chloride Polymer and Copolymer open-cell foams.''

S7 *Test dummies.* (Subparts referenced in this section are of part 572 of this chapter.)

S7.1 *Dummy selection.*

(a) A child restraint that is recommended by its manufacturer in accordance with S5.5 for use either by children in a specified mass range that includes any children having a mass of not greater than 5 kg, or by children in a specified height range that includes any children whose height is not greater than 650 mm, is tested with a newborn test dummy conforming to part 572 subpart K.

(b) A child restraint that is recommended by its manufacturer in accordance with S5.5 for use either by children in a specified mass range that includes any children having a mass greater than 5 but not greater than 10 kg, or by children in a specified height range that includes any children whose height is greater than 650 mm but not greater than 850 mm, is tested with a newborn test dummy conforming to part 572 subpart K, and a 9-month-old test dummy conforming to part 572 subpart J.

(c) A child restraint that is recommended by its manufacturer in accordance with S5.5 for use either by children in a specified mass range that includes any children having a mass greater than 10 kg but not greater than 18 kg, or by children in a specified height range that includes any children whose height is greater than 850 mm but not greater than 1100 mm, is tested with a 9-month-old test dummy conforming to part 572 subpart J, and a 3-year-old test dummy conforming to part 572 subpart C and S7.2, provided, however, that the 9-month-old dummy is not used to test a booster seat.

(d) A child restraint that is recommended by its manufacturer in accordance with S5.5 for use either by children in a specified mass range that includes any children having a mass greater than 18 kg, or by children in a specified height range that includes any children whose height is greater than 1100 mm, is tested with a 6-year-old child dummy conforming to part 572 subpart I.

(e) A child restraint that meets the criteria in two or more of the preceding paragraphs in S7.1 is tested with each of the test dummies specified in those paragraphs.

S7.2 *Three-year-old dummy head.* Effective September 1, 1993, this dummy is assembled with the head assembly specified in section 572.16(a)(1) of this chapter.

S8 *Requirements, test conditions, and procedures for child restraint systems manufactured for use in aircraft.* Each child restraint system manufactured for use in both motor vehicles and aircraft must comply with all of the applicable requirements specified in Section S5 and with the additional requirements specified in S8.1 and S8.2.

S8.1 *Installation instructions.* Each child restraint system manufactured for use in aircraft shall be accompanied by printed instructions in English that provide a step-by-step procedure, including diagrams, for installing the system in aircraft passenger seats, securing a child in the system when it is installed in aircraft, and adjusting the system to fit the child.

S8.2 *Inversion test.* When tested in accordance with S8.2.1 through S8.2.5, each child restraint system manufactured for use in aircraft shall meet the requirements of S8.2.1 through S8.2.6. The manufacturer may, at its option,

use any seat which is a representative aircraft passenger seat within the meaning of S4. Each system shall meet the requirements at each of the restraint's seat back angle adjustment positions and restraint belt routing positions, when the restraint is oriented in the direction recommended by the manufacturer (e.g., facing forward, rearward or laterally) pursuant to S8.1, and tested with the test dummy specified in S7. If the manufacturer recommendations do not include instructions for orienting the restraint in aircraft when the restraint seat back angle is adjusted to any position, position the restraint on the aircraft seat by following the instructions (provided in accordance with S5.6) for orienting the restraint in motor vehicles.

S8.2.1 A standard seat assembly consisting of a representative aircraft passenger seat shall be positioned and adjusted so that its horizontal and vertical orientation and its seat back angle are the same as shown in Figure 6.

S8.2.2 The child restraint system shall be attached to the representative aircraft passenger seat using, at the manufacturer's option, any Federal Aviation Administration approved aircraft safety belt, according to the restraint manufacturer's instructions for attaching the restraint to an aircraft seat. No supplementary anchorage belts or tether straps may be attached; however, Federal Aviation Administration approved safety belt extensions may be used.

S8.2.3 In accordance with S10, place in the child restraint any dummy specified in S7 for testing systems for use by children of the heights and weights for which the system is recommended in accordance with S5.5 and S8.1.

S8.2.4 If provided, shoulder and pelvic belts that directly restrain the dummy shall be adjusted in accordance with S6.1.2.

S8.2.5 The combination of representative aircraft passenger seat, child restraint, and test dummy shall be rotated forward around a horizontal axis which is contained in the median transverse vertical plane of the seating surface portion of the aircraft seat and is located 25 mm below the bottom of the seat frame, at a speed of 35 to 45 degrees per second, to an angle of 180 degrees. The rotation shall be stopped when it reaches that angle and the seat shall be held in this position for three seconds. The child restraint shall not fall out of the aircraft safety belt nor shall the test dummy fall out of the child restraint at any time during the rotation or the three second period. The specified rate of rotation shall be attained in not less than one half second and not more than one second, and the rotating combination shall be brought to a stop in not less than one half second and not more than one second.

S8.2.6 Repeat the procedures set forth in S8.2.1 through S8.2.4. The combination of the representative aircraft passenger seat, child restraint, and test dummy shall be rotated sideways around a horizontal axis which is contained in the median longitudinal vertical plane of the seating surface portion of the aircraft seat and is located 25 mm below the bottom of the seat frame, at a speed of 35 to 45 degrees per second, to an angle of 180 degrees. The rotation shall be stopped when it reaches that angle and the seat shall be held in this position for three seconds. The child restraint shall not fall out of the aircraft safety belt nor shall the test dummy fall out of the child restraint at any time during the rotation or the three second period. The specified rate of rotation shall be attained in not less than one half second and not more than one second, and the rotating combination shall be brought to a stop in not less than one half second and not more than one second.

S9 *Dummy clothing and preparation.*

S9.1 *Type of clothing.*

(a) *Newborn dummy.* When used in testing under this standard, the dummy is unclothed.

(b) *Nine-month-old dummy.* When used in testing under this standard, the dummy is clothed in terry cloth polyester and cotton size 1 long sleeve shirt and size 1 long pants, with a total mass of 0.136 kg.

(c) *Three-year-old and six-year-old dummies.* When used in testing under this standard, the dummy is clothed in thermal knit, waffle-weave polyester and cotton underwear or equivalent, a

size 4 long-sleeved shirt (3-year-old dummy) or a size 5 long-sleeved shirt (6-year-old dummy) having a mass of 0.090 kg, a size 4 pair of long pants having a mass of 0.090 kg, and cut off just far enough above the knee to allow the knee target to be visible, and size 7M sneakers (3-year-old dummy) or size 12 ½M sneakers (6-year-old dummy) with rubber toe caps, uppers of dacron and cotton or nylon and a total mass of 0.453 kg.

S9.2 *Preparing clothing*. Clothing other than the shoes is machined-washed in 71 °C to 82 °C and machine-dried at 49 °C to 60 °C for 30 minutes.

S9.3 *Preparing dummies*. Before being used in testing under this standard, dummies must be conditioned at any ambient temperature from 19 °C to 25.5 °C and at any relative humidity from 10 percent to 70 percent for at least 4 hours.

S10 *Positioning the dummy and attaching the system belts*.

S10.1 *Car beds*. Place the test dummy in the car bed in the supine position with its midsagittal plane perpendicular to the center SORL of the standard seat assembly, in the case of an add-on car bed, or perpendicular to the longitudinal axis of the specific vehicle shell or the specific vehicle, in the case of a built-in car bed. Position the dummy within the car bed in accordance with the instructions for child positioning that the bed manufacturer provided with the bed in accordance with S5.6.

S10.2 *Restraints other than car beds*.

S10.2.1 *Newborn dummy and nine-month-old dummy*. Position the test dummy according to the instructions for child positioning that the manufacturer provided with the system under S5.6.1 or S5.6.2, while conforming to the following:

(a) Prior to placing the 9-month-old test dummy in the child restraint system, place the dummy in the supine position on a horizontal surface. While placing a hand on the center of the torso to prevent movement of the dummy torso, rotate the dummy legs upward by lifting the feet 90 degrees. Slowly release the legs but do not return them to the flat surface.

(b)(1) When testing forward-facing child restraint systems, holding the 9-month-old test dummy torso upright until it contacts the system's design seating surface, place the 9-month-old test dummy in the seated position within the system with the mid-sagittal plane of the dummy head—

(i) Coincident with the center SORL of the standard seating assembly, in the case of the add-on child restraint system, or

(ii) Vertical and parallel to the longitudinal center line of the specific vehicle shell or the specific vehicle, in the case of a built-in child restraint system.

(2) When testing rear-facing child restraint systems, place the newborn or 9-month old dummy in the child restraint system so that the back of the dummy torso contacts the back support surface of the system. For a child restraint system which is equipped with a fixed or movable surface described in S5.2.2.2 which is being tested under the conditions of test configuration II, do not attach any of the child restraint belts unless they are an integral part of the fixed or movable surface. For all other child restraint systems and for a child restraint system with a fixed or movable surface which is being tested under the conditions of test configuration I, attach all appropriate child restraint belts and tighten them as specified in S6.1.2. Attach all appropriate vehicle belts and tighten them as specified in S6.1.2. Position each movable surface in accordance with the instructions that the manufacturer provided under S5.6.1 or S5.6.2. If the dummy's head does not remain in the proper position, it shall be taped against the front of the seat back surface of the system by means of a single thickness of 6 mm-wide paper masking tape placed across the center of the dummy's face.

(c)(1)(i) When testing forward-facing child restraint systems, extend the arms of the 9-month-old test dummy as far as possible in the upward vertical direction. Extend the legs of the 9-month-old dummy as far as possible in the forward horizontal direction, with the dummy feet perpendicular to the centerline of the lower legs. Using a flat square surface with an area of 2,580 square mm, apply a force of 178 N, perpendicular to:

(A) The plane of the back of the standard seat assembly, in the case of an add-on system, or

(B) The back of the vehicle seat in the specific vehicle shell or the specific vehicle, in the case of a built-in system, first against the dummy crotch and then at the dummy thorax in the midsagittal plane of the dummy. For a child restraint system with a fixed or movable surface described in S5.2.2.2, which is being tested under the conditions of test configuration II, do not attach any of the child restraint belts unless they are an integral part of the fixed or movable surface. For all other child restraint systems and for a child restraint system with a fixed or movable surface which is being tested under the conditions of test configuration I, attach all appropriate child restraint belts and tighten them as specified in S6.1.2. Attach all appropriate vehicle belts and tighten them as specified in S6.1.2. Position each movable surface in accordance with the instructions that the manufacturer provided under S5.6.1 or S5.6.2.

(ii) After the steps specified in paragraph (c)(1)(i) of this section, rotate each dummy limb downwards in the plane parallel to the dummy's midsagittal plane until the limb contacts a surface of the child restraint system or the standard seat assembly, in the case of an add-on system, or the specific vehicle shell or specific vehicle, in the case of a built-in system, as appropriate. Position the limbs, if necessary, so that limb placement does not inhibit torso or head movement in tests conducted under S6.

(2) When testing rear-facing child restraints, position the newborn and 9-month-old dummy arms vertically upwards and then rotate each arm downward toward the dummy's lower body until the arm contacts a surface of the child restraint system or the standard seat assembly in the case of an add-on child restraint system, or the specific vehicle shell or the specific vehicle, in the case of a built-in child restraint system. Ensure that no arm is restrained from movement in other than the downward direction, by any part of the system or the belts used to anchor the system to the standard seat assembly, the specific shell, or the specific vehicle.

S10.2.2 *Three-year-old and six-year-old test dummy*. Position the test dummy according to the instructions for child positioning that the restraint manufacturer provided with the system in accordance with S5.6.1 or S5.6.2, while conforming to the following:

(a) Holding the test dummy torso upright until it contacts the system's design seating surface, place the test dummy in the seated position within the system with the midsagittal plane of the test dummy head—

(1) Coincident with the center SORL of the standard seating assembly, in the case of the add-on child restraint system, or

(2) Vertical and parallel to the longitudinal center line of the specific vehicle, in the case of a built-in child restraint system.

(b) Extend the arms of the test dummy as far as possible in the upward vertical direction. Extend the legs of the dummy as far as possible in the forward horizontal direction, with the dummy feet perpendicular to the center line of the lower legs.

(c) Using a flat square surface with an area of 2580 square millimeters, apply a force of 178 N, perpendicular to:

(1) The plane of the back of the standard seat assembly, in the case of an add-on system, or

(2) The back of the vehicle seat in the specific vehicle shell or the specific vehicle, in the case of a built-in system, first against the dummy crotch and then at the dummy thorax in the midsagittal plane of the dummy. For a child restraint system with a fixed or movable surface described in S5.2.2.2, which is being tested under the conditions of test configuration II, do not attach any of the child restraint belts unless they are an integral part of the fixed or movable surface. For all other child restraint systems and for a child restraint system with a fixed or movable surface which is being tested under the conditions of test configuration I, attach all appropriate child restraint belts and tighten them as specified in S6.1.2. Attach all appropriate vehicle belts and tighten them as specified in S6.1.2. Position each movable

surface in accordance with the instructions that the manufacturer provided under S5.6.1 or S5.6.2.

(d) After the steps specified in paragraph (c) of this section, rotate each dummy limb downwards in the plane parallel to the dummy's midsagittal plane until the limb contacts a surface of the child restraint system or the standard seat assembly, in the case of an add-on system, or the specific vehicle shell or specific vehicle, in the case of a built-in system, as appropriate. Position the limbs, if necessary, so that limb placement does not inhibit torso or head movement in tests conducted under S6.

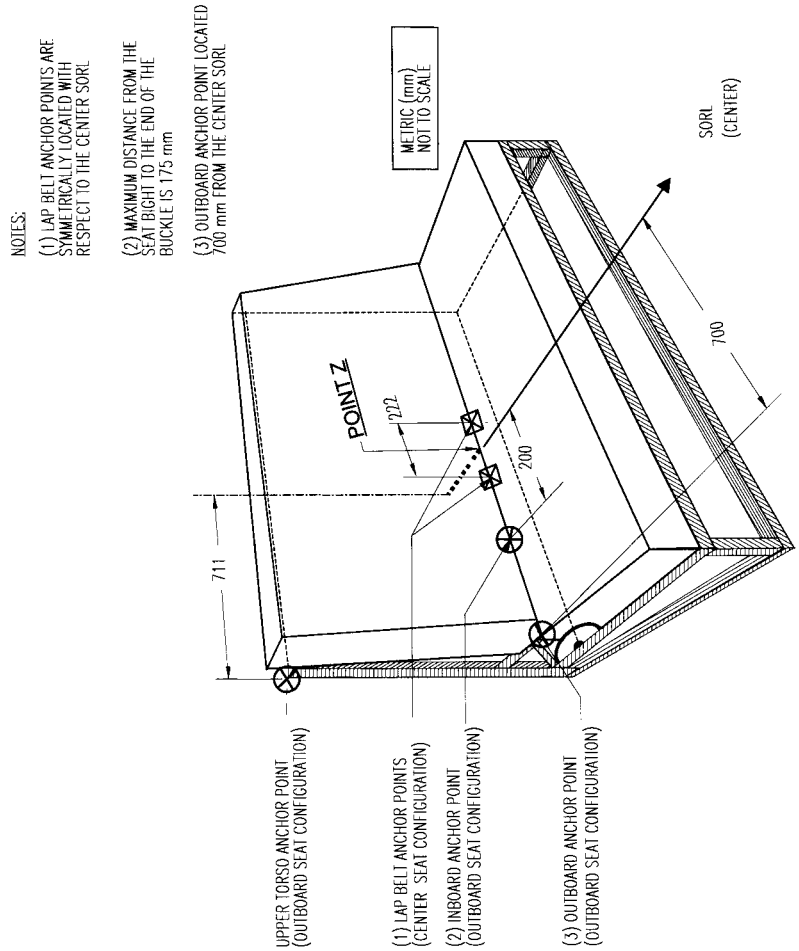

SEAT ORIENTATION REFERENCE LINE AND BELT ANCHORAGE POINT LOCATIONS ON THE STANDARD SEAT ASSEMBLY

Figure 1A

NOTES:

(ii) UNIVERSAL LOWER ANCHOR BARS 6 mm DIAMETER AND 25 mm LENGTH

(iii) TRANSVERSE HORIZONTAL DISTANCE BETWEEN THE CENTER OF THE UNIVERSAL ANCHOR BARS AND THE VERTICAL PLANE LOWER CONTAINING SORL AT THE CENTER OF THE SEAT ASSEMBLY IS 140 mm.

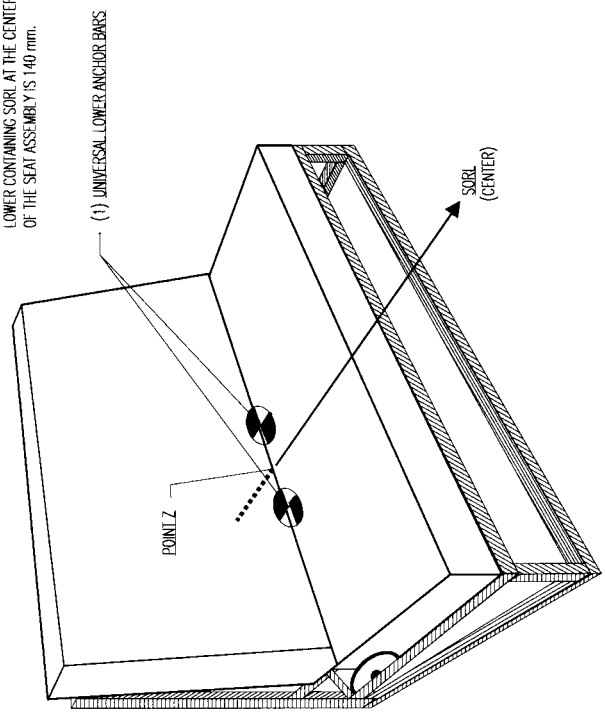

SEAT ORIENTATION REFERENCE LINE AND LOCATION OF UNIVERSAL CHILD RESTRAINT ANCHORAGE SYSTEM ON THE STANDARD SEAT ASSEMBLY

Figure 1A'

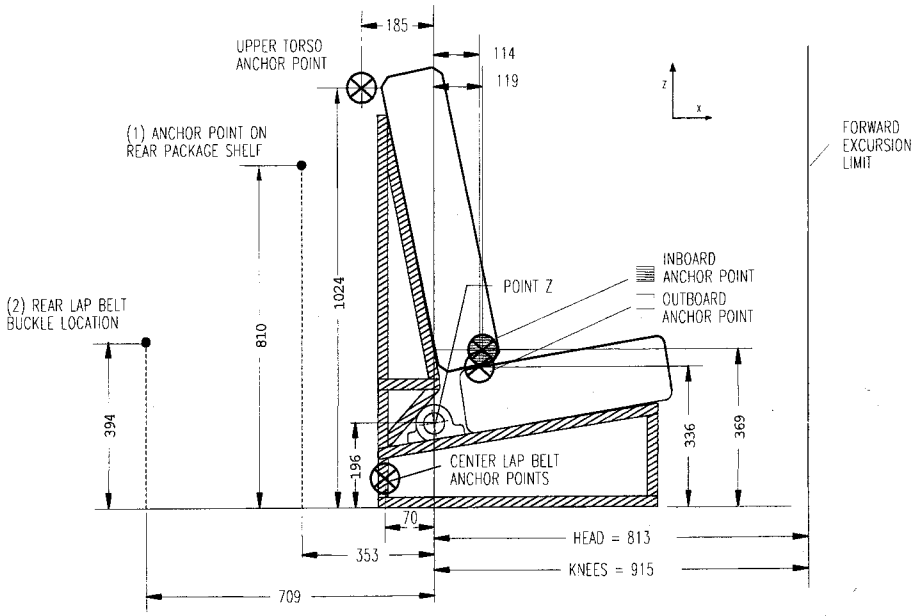

NOTES:
(1) Anchor Point on Rear Package Shelf Located 544 mm Right or Left of the Center SORL as shown in Fig. 1A
(2) Rear Lap Belt Buckle Located 178 mm Right or Left of the Center SORL as shown in Fig. 1A

METRIC (mm)
NOT TO SCALE

LOCATION OF BELT ANCHORAGE POINTS AND FORWARD EXCURSION LIMITS ON THE STANDARD SEAT ASSEMBLY
Figure 1B

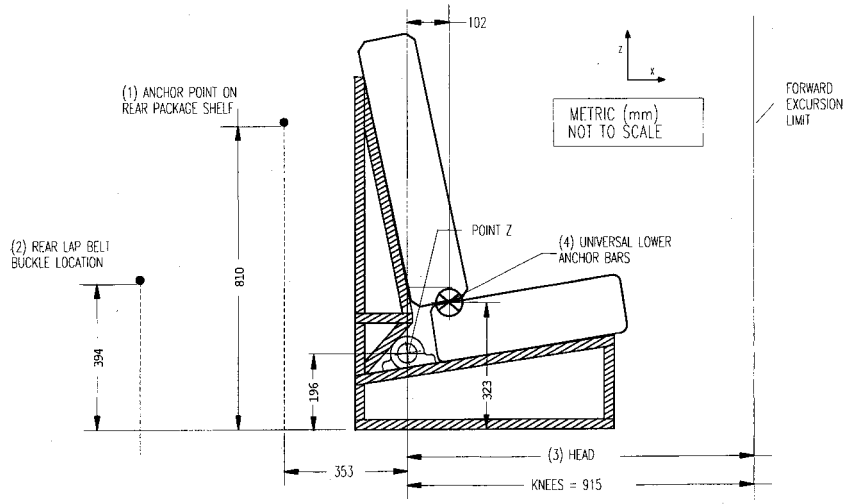

NOTES:
(1) Anchor Point on Rear Package Shelf Located 544 mm Right or Left of the Center SORL as shown in Fig. 1A'
(2) Rear Lap Belt Buckle Located 178 mm Right or Left of the Center SORL as shown in Fig. 1A'
(3) Head Excursion Limit is: (i) 720 mm with Tether Attached and (ii) 813 mm with Tether Unattached
(4) Universal Lower Anchor Bars Located 102 mm Forward of Pt Z and 279 mm Upward from Floor

LOCATION OF UNIVERSAL CHILD RESTRAINT ANCHORAGE SYSTEM AND FORWARD EXCURSION LIMITS FOR THE STANDARD SEAT ASSEMBLY
Figure 1B'

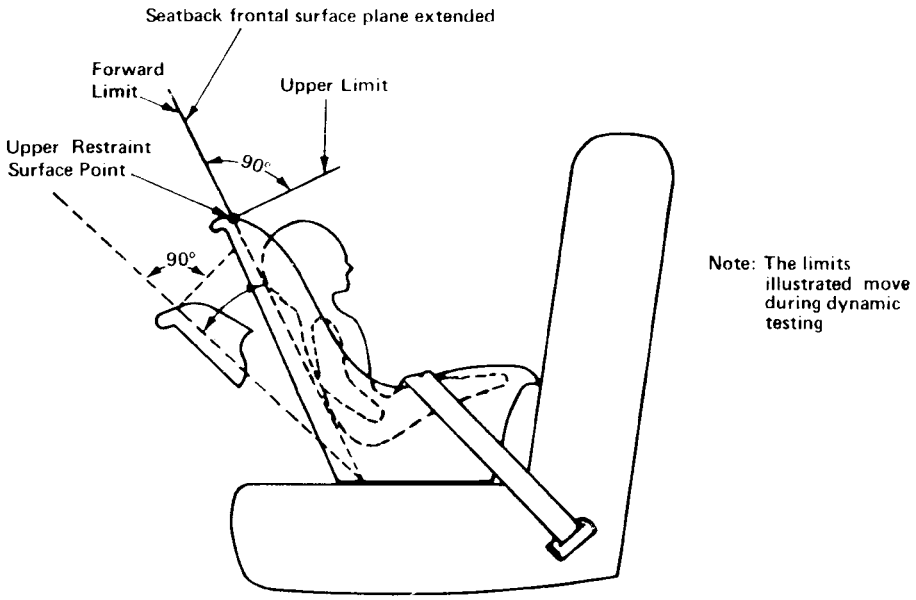

REAR FACING CHILD RESTRAINT
FORWARD AND UPPER HEAD EXCURSION LIMITS

FIGURE 1C

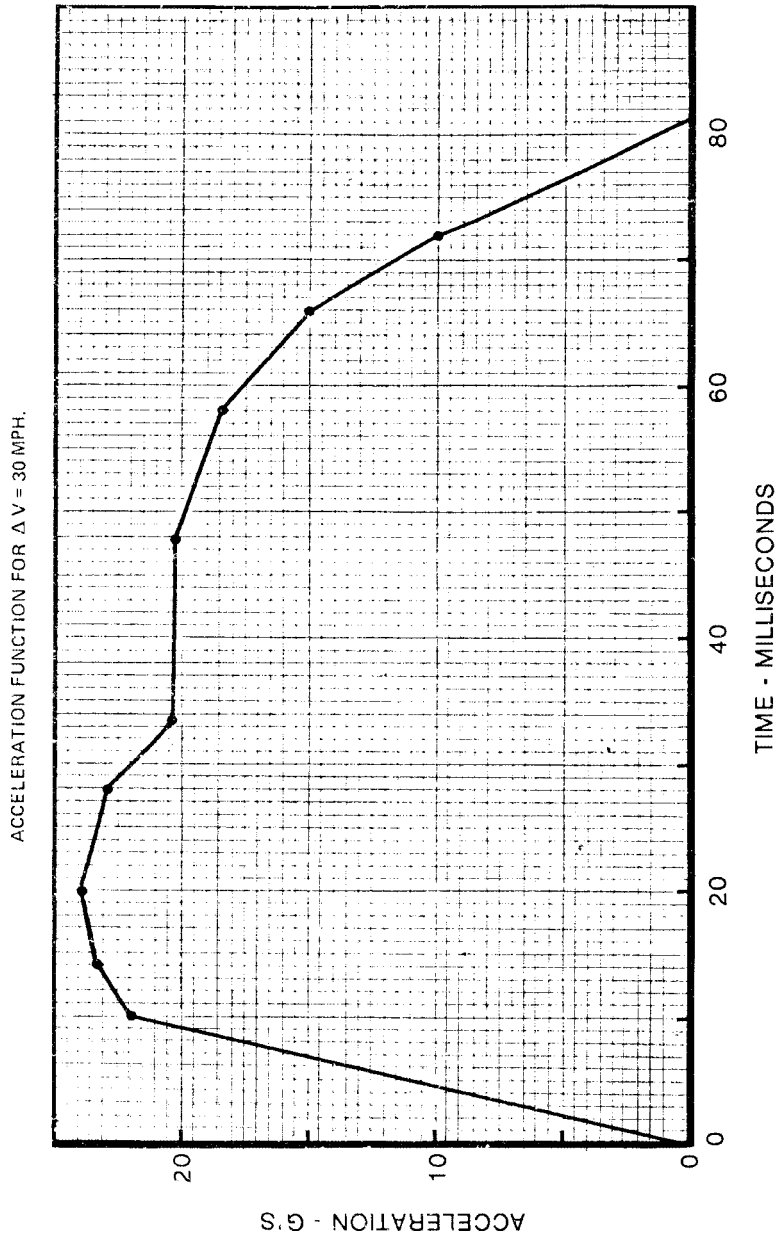
ACCELERATION FUNCTION FOR Δ V = 30 MPH.
ACCELERATION - G'S
20
10
0
0
20
40
60
80
TIME - MILLISECONDS

FIGURE 2

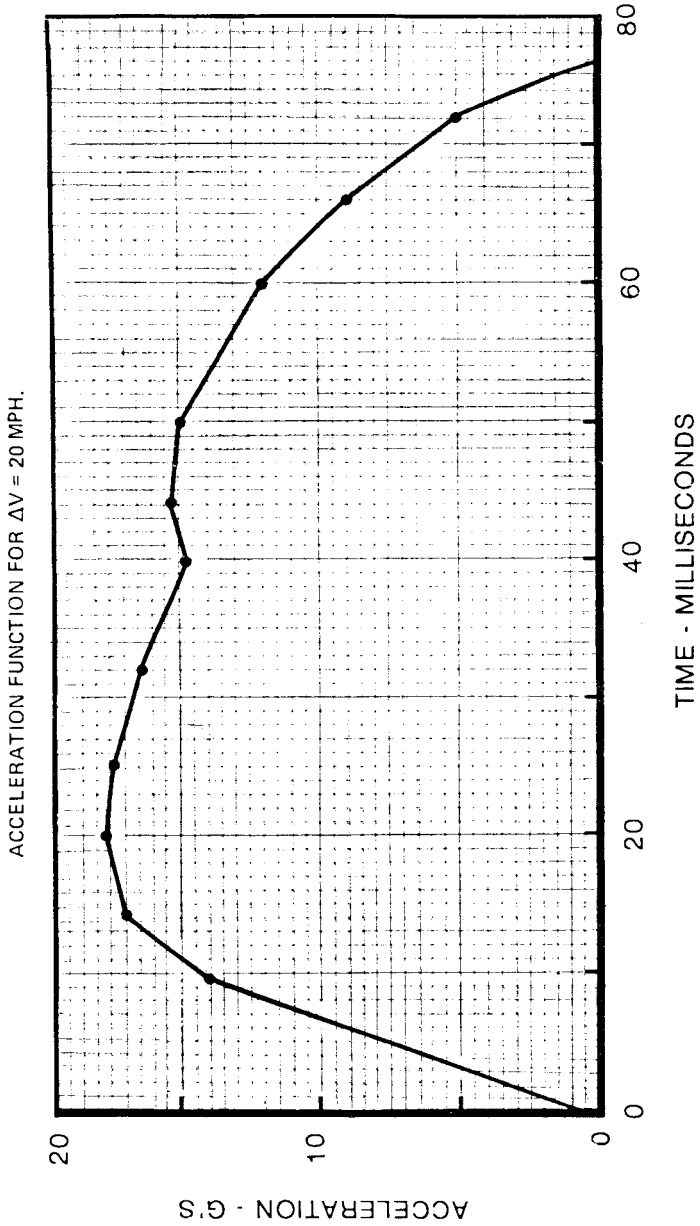
ACCELERATION FUNCTION FOR ΔV = 20 MPH.
ACCELERATION - G'S
20
10
0
0
20
40
60
80
TIME - MILLISECONDS

FIGURE 3

a)

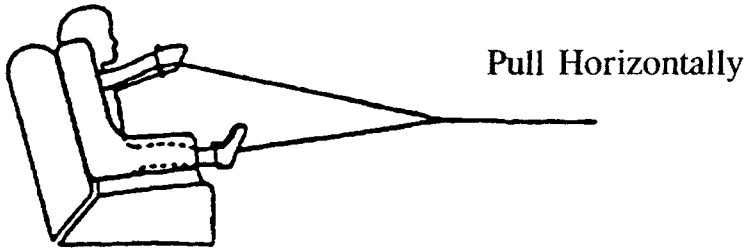

b)

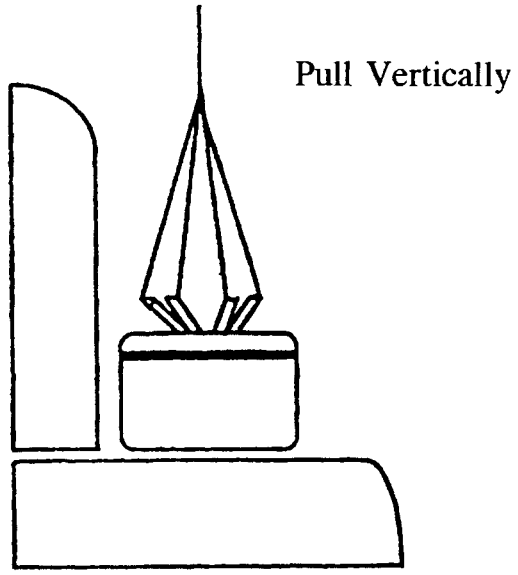

FIGURE 4 - Buckle Release Test

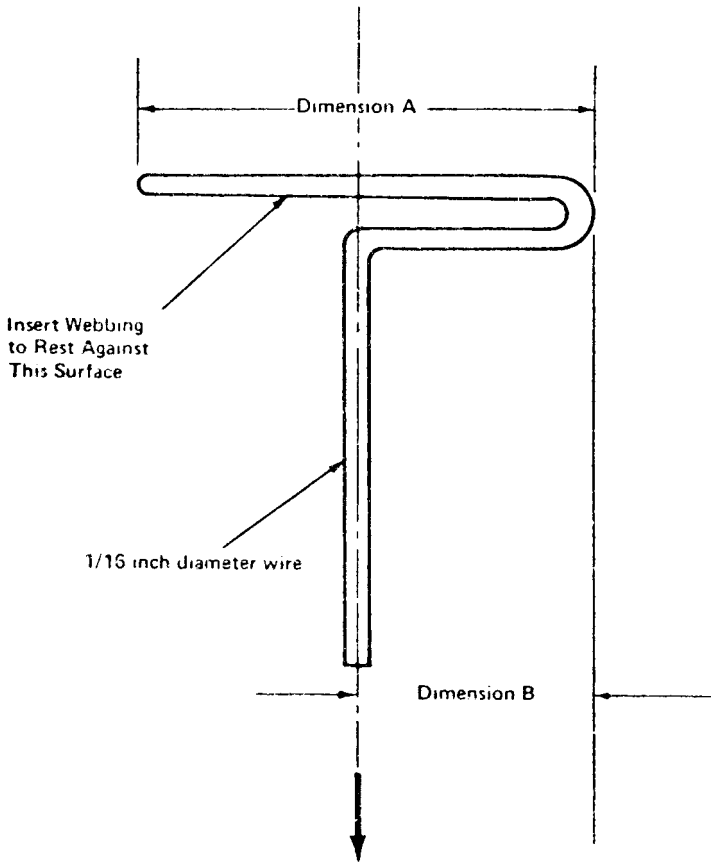

Dimension A - Width of Webbing Plus 1/8 inch

Dimension B - 1/2 of Dimension A

WEBBING TENSION PULL DEVICE

FIGURE 5

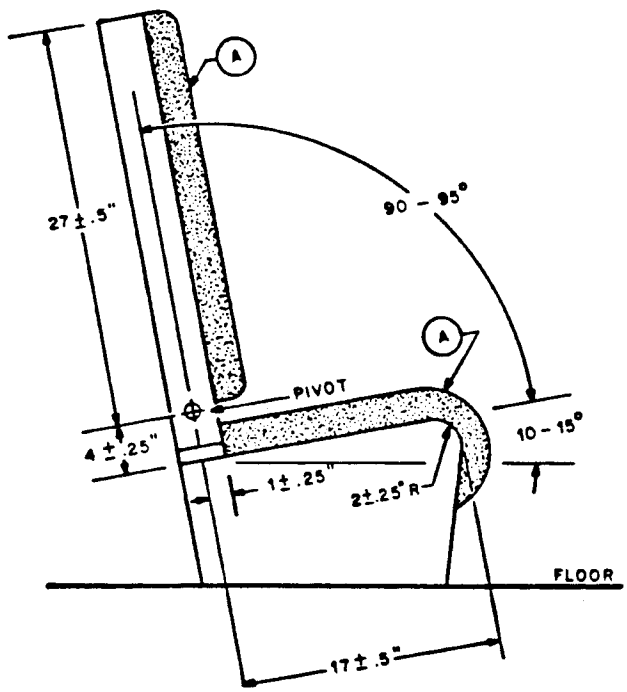

"A" represents a 2- to 3-inch thick polyurethane foam pad, 1.5-2.0 pounds per cubic foot density, over 0.020-inch-thick aluminum pan, and covered by 12- to 14-ounce marine canvas. The sheet aluminum pan is 20 inches wide and supported on each side by a rigid structure. The seat back is a rectangular frame covered with the aluminum sheet and weighing between 14 and 15 pounds, with a center of mass 13 to 16 inches above the seat pivot axis. The mass moment of inertia of the seat back about the seat pivot axis is between 195 and 220 ounce-inch-second^2. The seat back is free to fold forward about the pivot, but a stop prevents rearward motion. The passenger safety belt anchor points are spaced 21 to 22 inches apart and are located in line with the seat pivot axis.

FIGURE 6: SIMULATED AIRCRAFT PASSENGER SEAT

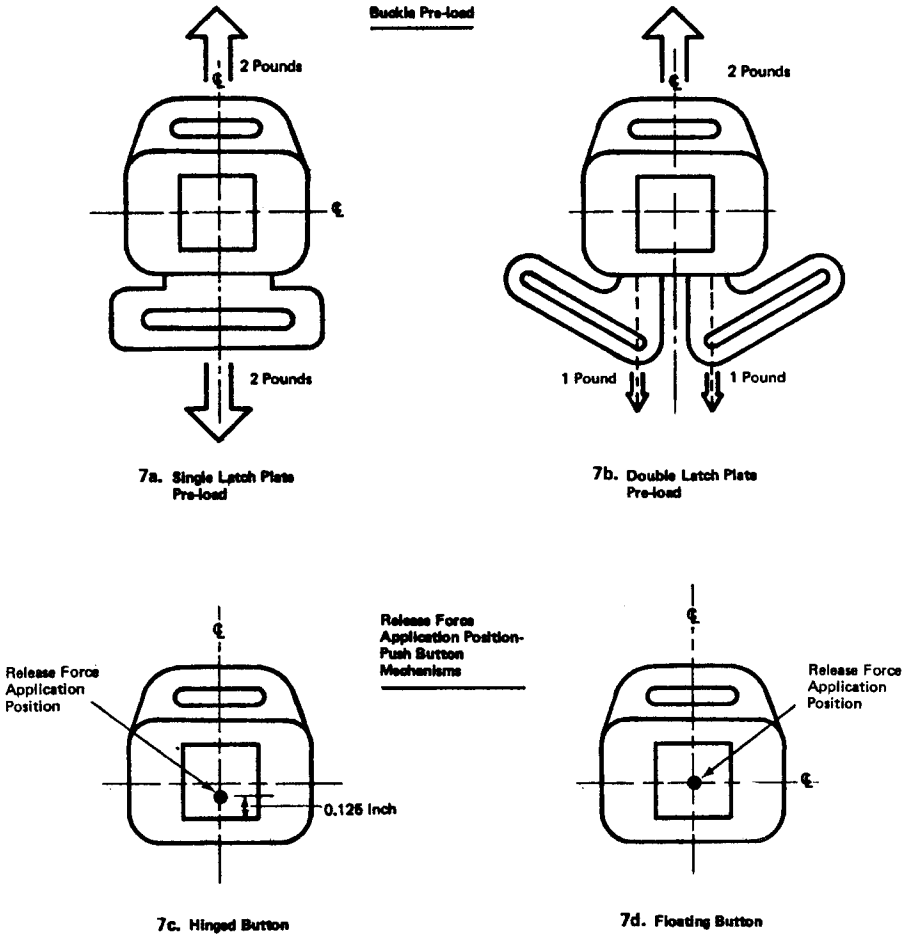

Figure 7. Pre-impact Buckle Release Force Test Set-up

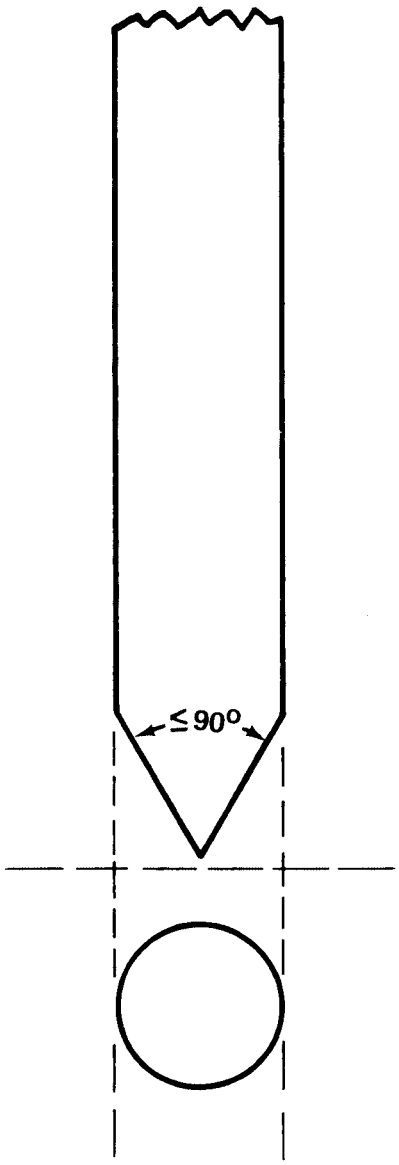

Figure 8. Release Force Application Device--
Push Button Release Buckles

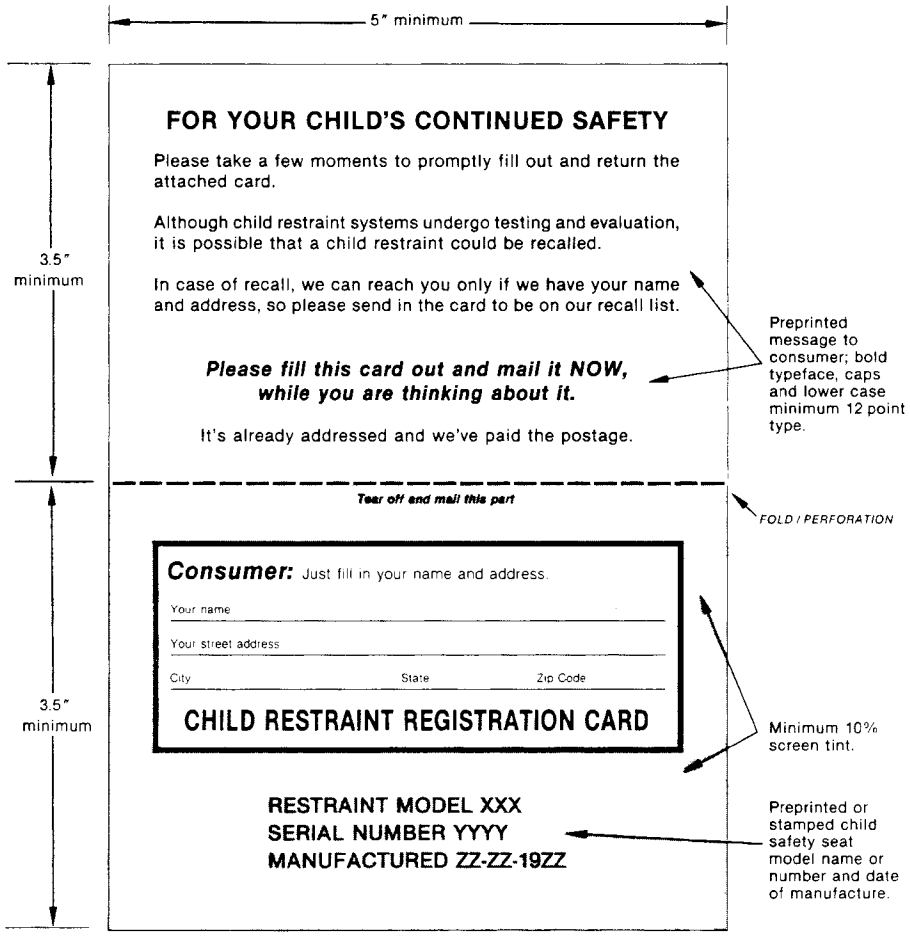

Figure 9a—Registration form for Child Systems—Product Identification Number and Purchaser Information Side.

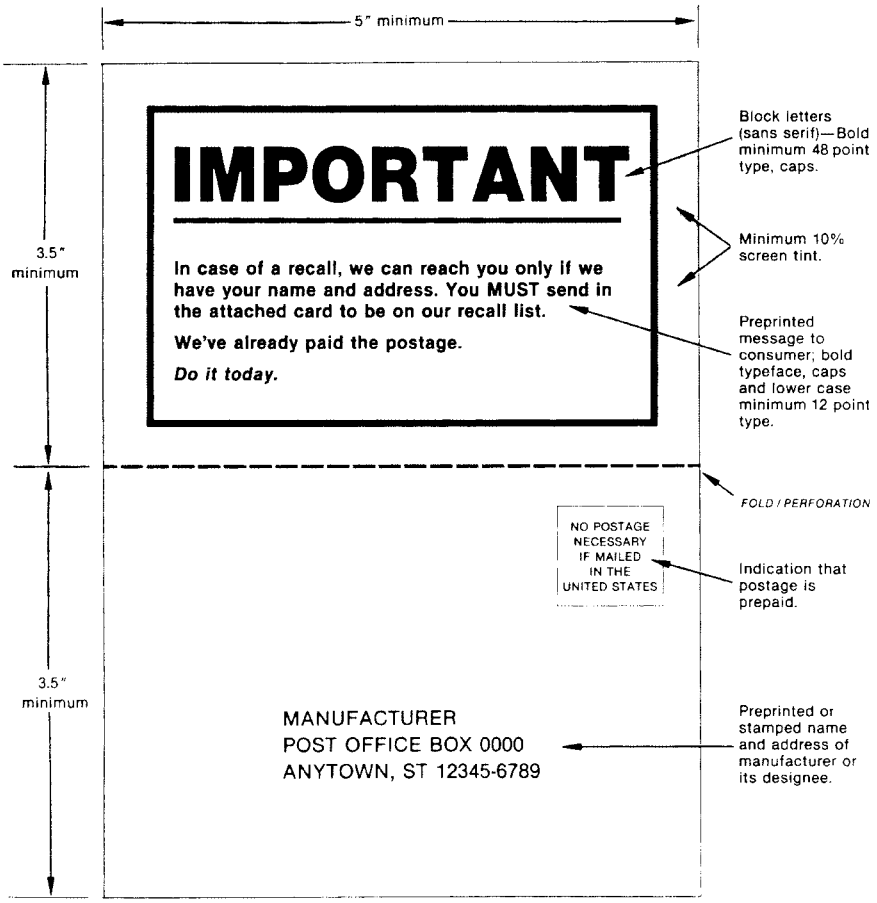

Figure 9b—Registration form for Child Restraint Systems—address side.

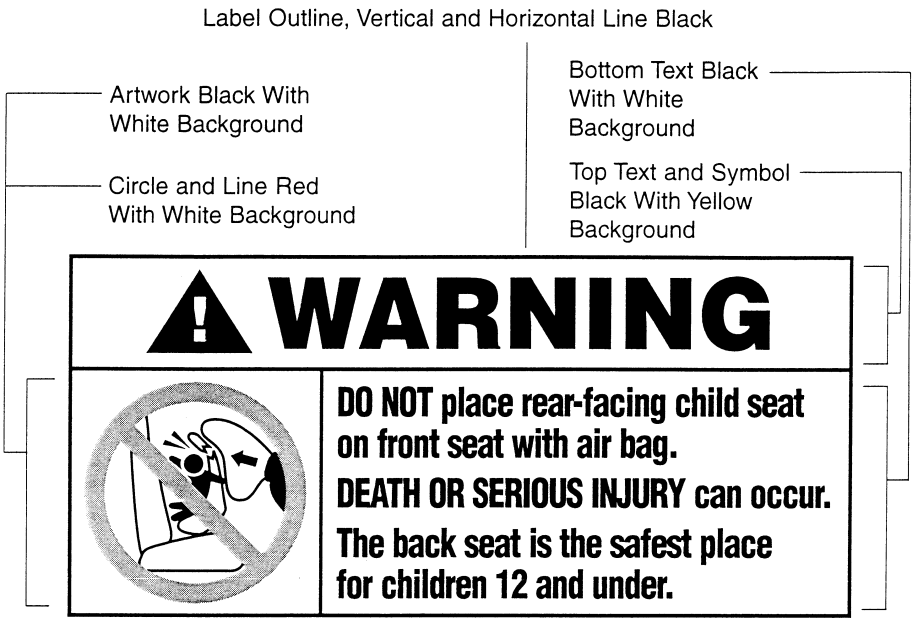

Figure 10. Label on Child Seat Where Child's Head Rests.

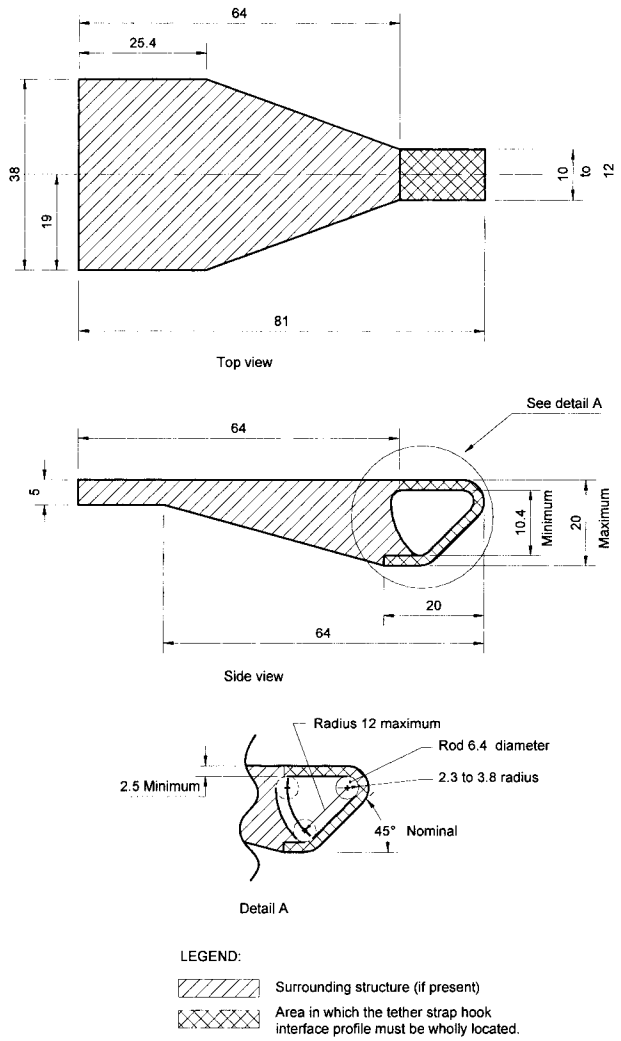

Notes

1. Dimensions in mm, except where otherwise indicated
2. Drawing not to scale

Figure 11 -- Interface Profile of Tether Hook

[44 FR 72147, Dec. 13, 1979]

EDITORIAL NOTE: For FEDERAL REGISTER citations affecting §571.213, see the List of CFR Sections Affected in the Finding Aids section of this volume.

EFFECTIVE DATE NOTE: At 67 FR 61529, Oct. 1, 2002, §571.213 was amended by revising the introductory text of S5.5.2, S5.5.2(f), S5.5.2(g), S5.5.2(h), S5.5.2(i), S5.5.2(j), S5.5.2(k), S5.5.2(l), S5.5.3, the introductory text of S5.5.5, S5.5.5(f), S5.5.5(g), S5.5.5(h), S5.5.5(i), S5.6.1.10(a) and S5.6.1.10(b); redesignating existing S5.6.3 as S5.6.2.4 and existing S5.6.4 as S5.6.2.5; adding new introductory text to sections S5.5 and S5.6; and adding new section S5.6.3, effective Oct. 1, 2003. For the convenience of the user, the revised and added text is set forth as follows:

§571.213 Standard No. 213; Child Restraint Systems.

* * * * *

S5.5 *Labeling.*

Any labels or written instructions provided in addition to those required by this section shall not obscure or confuse the meaning of the required information or be otherwise misleading to the consumer. Any labels or written instructions other than in the English language shall be an accurate translation of English labels or written instructions.

* * * * *

S5.5.2 The information specified in paragraphs (a) through (m) of this section shall be stated in the English language and lettered in letters and numbers that are not smaller than 10 point type. Unless otherwise specified, the information shall be labeled on a white background with black text. Unless written in all capitals, the information shall be stated in sentence capitalization.

* * * * *

(f) One of the following statements, inserting the manufacturer's recommendations for the maximum mass of children who can safely occupy the system, except that booster seats shall not be recommended for children whose masses are less than 13.6 kg and seats that can only be used as belt-positioning seats may delete the reference to weight:

(1) Use only with children who weigh ____ pounds (____ kg) or less and whose height is (*insert values in English and metric units; use of word ''mass'' in label is optional*) or less; or

(2) Use only with children who weigh between ____ and ____ pounds (*insert appropriate English and metric values; use of word ''mass'' is optional*) and whose height is (*insert appropriate values in English and metric units*) or less and who are capable of sitting upright alone; or

(3) Use only with children who weigh between ____ and ____ pounds (*insert appropriate English and metric values; use of word ''mass'' is optional*) and whose height is (*insert appropriate values in English and metric units*) or less.

(g) The statements specified in paragraphs (1) and (2):

(1) A heading as specified in S5.5.2(k)(4)(i), with the statement ''WARNING! DEATH or SERIOUS INJURY can occur,'' capitalized as written and followed by bulleted statements in the following order:

(i) As appropriate, the statements required by the following sections will be bulleted and placed after the statement required by 5.5.2(g)(1) in the following order: 5.5.2(k)(1) or 5.5.2(k)(2), 5.5.2(f), 5.5.2(h), 5.5.2(j), and 5.5.2(i).

(ii) Secure this child restraint with the vehicle's child restraint anchorage system if available or with a vehicle belt.

(iii) Follow all instructions on this child restraint and in the written instructions located (*insert storage location on the restraint for the manufacturer's installation instruction booklet or sheet*).

(iv) Register your child restraint with the manufacturer.

(2) At the manufacturer's option, the phrase ''DEATH or SERIOUS INJURY can occur'' in the heading can be on either a white or yellow background.

(h) In the case of each child restraint system that has belts designed to restrain children using them and which do not adjust automatically to fit the child: Snugly adjust the belts provided with this child restraint around your child.

(i)(1) For a booster seat that is recommended for use with either a vehicle's Type I or Type II seat belt assembly, one of the following statements, as appropriate:

(i) Use only the vehicle's lap and shoulder belt system when restraining the child in this booster seat; or,

(ii) Use only the vehicle's lap belt system, or the lap belt part of a lap/shoulder belt system with the shoulder belt placed behind the child, when restraining the child in this seat.

(2)(i) Except as provided in paragraph (i)(2)(ii) of this section, for a booster seat which is recommended for use with both a vehicle's Type I and Type II seat belt assemblies, the following statement: Use only the vehicle's lap belt system, or the lap belt part of a lap/shoulder belt system with the shoulder belt placed behind the child, when restraining the child with the (*insert description of the system element provided to restrain forward movement of the child's torso when used with a lap belt (e.g., shield)*), and only the vehicle's lap and shoulder belt system when

using the booster without the (*insert above description*).

(ii) A booster seat which is recommended for use with both a vehicle's Type I and Type II seat belt assemblies is not subject to S5.5.2(i)(2)(i) if, when the booster is used with the shield or similar component, the booster will cause the shoulder belt to be located in a position other than in front of the child when the booster is installed. However, such a booster shall be labeled with a warning to use the booster with the vehicle's lap and shoulder belt system when using the booster without a shield.

(j) In the case of each child restraint system equipped with a top anchorage strap, the statement: Secure the top anchorage strap provided with this child restraint.

(k) (1) In the case of each rear-facing child restraint system that is designed for infants only, the statement: Use only in a rear-facing position when using it in the vehicle.

(2) In the case of a child restraint system that is designed to be used rearward-facing for infants and forward-facing for older children, the statement: Use only in a rear-facing position when using it with an infant weighing less than (*insert a recommended weight that is not less than 20 pounds*).

(3) Except as provided in (k)(4) of this section, each child restraint system that can be used in a rear-facing position shall have a label that conforms in content to Figure 10 and to the requirements of S5.5.2(k)(3)(i) through S5.5.2(k)(3)(iii) of this standard permanently affixed to the outer surface of the cushion or padding in or adjacent to the area where a child's head would rest, so that the label is plainly visible and easily readable.

(i) The heading area shall be yellow with the word ''warning'' and the alert symbol in black.

(ii) The message area shall be white with black text. The message area shall be no less than 30 square cm.

(iii) The pictogram shall be black with a red circle and slash on a white background. The pictogram shall be no less than 30 mm in diameter.

(4) If a child restraint system is equipped with a device that deactivates the passenger-side air bag in a vehicle when and only when the child restraint is installed in the vehicle and provides a signal, for at least 60 seconds after deactivation, that the air bag is deactivated, the label specified in Figure 10 may include the phrase ''unless air bag is off'' after ''on front seat with air bag.''

(l) An installation diagram showing the child restraint system installed in:

(1) A seating position equipped with a continuous-loop lap/shoulder belt;

(2) A seating position equipped with only a lap belt, as specified in the manufacturer's instructions; and

(3) A seating position equipped with a child restraint anchorage system.

* * * * *

S5.5.3 The information specified in S5.5.2(f) through (l) shall be located on the add-on child restraint system so that it is visible when the system is installed as specified in S5.6.1.

* * * * *

S5.5.5 The information specified in paragraphs (a) through (l) of this section that is required by S5.5.4 shall be in English and lettered in letters and numbers using a not smaller than 10 point type. Unless specified otherwise, the information shall be labeled on a white background with black text. Unless written in all capitals, the information shall be stated in sentence capitalization.

* * * * *

(f) One of the following statements, inserting the manufacturer's recommendations for the maximum mass of children who can safely occupy the system, except that booster seats shall not be recommended for children whose masses are less than 13.6 kg and seats that can only be used as belt-positioning seats may delete the reference to weight:

(1) Use only with children who weigh ____ pounds (____ kg) or less and whose height is (*insert values in English and metric units; use of word ''mass'' in label is optional*) or less; or

(2) Use only with children who weigh between ____ and ____ pounds (____ and ____ kg) and whose height is (*insert appropriate values in English and metric units; use of word ''mass'' in label is optional*) or less and who are capable of sitting upright alone; or

(3) Use only with children who weigh between ____ and ____ pounds (____ and ____ kg) and whose height is (*insert appropriate values in English and metric units; use of word ''mass'' in label is optional*) or less.

(g) The heading and statement specified in paragraph (1), and if appropriate, the statements in paragraph (2) and (3). If used, the statements in paragraphs (2) and (3) shall be bulleted and precede the bulleted statement required by paragraph (1) after the heading.

(1) A heading as specified in S5.5.2(k)(4)(i), with the statement ''WARNING! DEATH or SERIOUS INJURY can occur'' capitalized as written and followed by the bulleted statement: Follow all instructions on this child restraint and in the vehicle's owner's manual. At the manufacturer's option the phrase ''DEATH or SERIOUS INJURY can occur'' in the heading can be on either a white or yellow background.

(2) In the case of each built-in child restraint system which is not intended for use

in motor vehicles in certain adjustment positions or under certain circumstances, an appropriate statement of the manufacturers restrictions regarding those positions or circumstances.

(3) As appropriate, the statements required by the following sections will be bulleted and placed after the statement required by 5.5.5(g)(1) in the following order: 5.5.5(g)(2), 5.5.5(f), S5.5.5(h) and S5.5.5(i).

(h) In the case of each built-in child restraint system that has belts designed to restrain children using them and which do not adjust automatically to fit the child: Snugly adjust the belts provided with this child restraint around your child.

(i) In the case of each built-in child restraint which can be used in a rear-facing position, the following statement: Place an infant in a rear-facing position in this child restraint.

* * * * *

S5.6 *Printed Instructions for Proper Use.*

Any labels or written instructions provided in addition to those required by this section shall not obscure or confuse the meaning of the required information or be otherwise misleading to the consumer. Any labels or written instructions other than in the English language shall be an accurate translation of English labels or written instructions. Unless written in all capitals, the information required by S5.6.1 through S5.6.3 shall be stated in sentence capitalization.

* * * * *

S5.6.1.10(a) For instructions for a booster seat that is recommended for use with either a vehicle's Type I or Type II seat belt assembly, one of the following statements, as appropriate, and the reasons for the statement:

(1) Warning! Use only the vehicle's lap and shoulder belt system when restraining the child in this booster seat; or,

(2) Warning! Use only the vehicle's lap belt system, or the lap belt part of a lap/shoulder belt system with the shoulder belt placed behind the child, when restraining the child in this seat.

(b)(1) Except as provided in S5.6.1.10(b)(2), the instructions for a booster seat that is recommended for use with both a vehicle's Type I and Type II seat belt assemblies shall include the following statement and the reasons therefor: Warning! Use only the vehicle's lap belt system, or the lap belt part of a lap/shoulder belt system with the shoulder belt placed behind the child, when restraining the child with the (*insert description of the system element provided to restrain forward movement of the child's torso when used with a lap belt (e.g., shield)*), and only the vehicle's lap and shoulder belt system when using this booster without the (*insert above description*).

(2) A booster seat which is recommended for use with both a vehicle's Type I and Type II seat belt assemblies is not subject to S5.6.1.10(b)(1) if, when the booster is used with the shield or similar component, the booster will cause the shoulder belt to be located in a position other than in front of the child when the booster is installed. However, the instructions for such a booster shall include a warning to use the booster with the vehicle's lap and shoulder belt system when using the booster without a shield.

* * * * *

S5.6.3 *Add-on and built-in child restraint systems.*

In the case of each child restraint system that has belts designed to restrain children using them and which do not adjust automatically to fit the child, the printed instructions shall include the following statement: A snug strap should not allow any slack. It lies in a relatively straight line without sagging. It does not press on the child's flesh or push the child's body into an unnatural position.

* * * * *

§571.214 Standard No. 214; Side impact protection.

S1. *Scope and purpose.*

(a) *Scope.* This standard specifies performance requirements for protection of occupants in side impact crashes.

(b) *Purpose.* The purpose of this standard is to reduce the risk of serious and fatal injury to occupants of passenger cars, multipurpose passenger vehicles, trucks and buses in side impact crashes by specifying vehicle crashworthiness requirements in terms of accelerations measured on anthropomorphic dummies in test crashes, by specifying strength requirements for side doors, and by other means.

S2. This standard applies to—

(a) Passenger cars;

(b) Effective September 1, 1993, sections S3(a), S3(e), S3.1 through S3.2.3, and S4 of the standard apply to multipurpose passenger vehicles, trucks, and buses with a GVWR of 10,000 pounds or less, except for walk-in vans; and

(c) Effective September 1, 1998, sections S3(f) and S5 of the standard apply to multipurpose passenger vehicles, trucks and buses with a GVWR of 6,000 pounds or less, except for walk-in vans, motor homes, tow trucks, dump

trucks, ambulances and other emergency rescue/medical vehicles (including vehicles with fire-fighting equipment), vehicles equipped with wheelchair lifts, and vehicles which have no doors or exclusively have doors that are designed to be easily attached or removed so the vehicle can be operated without doors.

S2.1 *Definitions.*

Contoured means, with respect to a door, that the lower portion of its front or rear edge is curved upward, typically to conform to a wheel well.

Double side doors means a pair of hinged doors with the lock and latch mechanisms located where the door lips overlap.

Walk-in van means a van in which a person can enter the occupant compartment in an upright position.

S3. *Requirements.* (a)(1) Except as provided in section S3(e), each passenger car shall be able to meet the requirements of either, at the manufacturer's option, S3.1 or S3.2, when any of its side doors that can be used for occupant egress is tested according to S4.

(2) Except as provided in section S3(e), each multipurpose passenger vehicle, truck and bus manufactured on or after September 1, 1994 shall be able to meet the requirements of either, at the manufacturer's option, S3.1 or S3.2, when any of its side doors that can be used for occupant egress is tested according to S4.

(b) When tested under the conditions of S6, each pasenger car manufactured on or after September 1, 1996 shall meet the requirements of S5.1, S5.2, and S5.3 in a 33.5 miles per hour impact in which the car is struck on either side by a moving deformable barrier. Part 572, subpart F test dummies are placed in the front and rear outboard seating positions on the struck side of the car. However, the rear seat requirements do not apply to passenger cars with a wheelbase greater than 130 inches, or to passenger cars which have rear seating areas that are so small that the part 572, subpart F dummies cannot be accommodated according to the positioning procedure specified in S7.

(c) Except as provided in paragraph (d) of this section, from September 1, 1993 to August 31, 1996, a specified percentage of each manufacturer's yearly passenger car production, as set forth in S8, shall, when tested under the conditions of S6, meet the requirements of S5.1, S5.2, and S5.3 in a 33.5 miles per hour impact in which the car is struck on either side by a moving deformable barrier. Part 572, subpart F test dummies are placed in the front and rear outboard seating positions on the struck side of the car. However, the rear seat requirements do not apply to passenger cars with a wheelbase greater than 130 inches, or to passenger cars which have rear seating areas that are so small that the part 572, subpart F dummies cannot be accommodated according to the positioning procedure specified in S7.

(d) A manufacturer may, at its option, comply with the requirements of this paragraph instead of paragraph (c) of this section. When tested under the conditions of S6, each passenger car manufactured from September 1, 1994 to August 31, 1996 shall meet the requirements of S5.1, S5.2, and S5.3 in a 33.5 miles per hour impact in which the car is struck on either side by a moving deformable barrier. Part 572, subpart F test dummies are placed in the front and rear outboard seating positions on the struck side of the car. However, the rear seat requirements do not apply to passenger cars with a wheelbase greater than 130 inches, or to passenger cars which have rear seating areas that are so small that the part 572, subpart F dummies cannot be accommodated according to the positioning procedure specified in S7.

(e) A vehicle need not meet the requirements of sections S3.1 or S3.2 for—

(1) Any side door located so that no point on a ten-inch horizontal longitudinal line passing through and bisected by the H-point of a manikin placed in any seat, with the seat adjusted to any position and the seat back adjusted as specified in Section S6.4, falls within the transverse, horizontal projection of the door's opening,

(2) Any side door located so that no point on a ten-inch horizontal longitudinal line passing through and bisected by the H-point of a manikin placed in any seat recommended by the manufacturer for installation in a location for

which seat anchorage hardware is provided, with the seat adjusted to any position and the seat back adjusted as specified in section S6.4, falls within the transverse, horizontal projection of the door's opening,

(3) Any side door located so that a portion of a seat, with the seat adjusted to any position and the seat back adjusted as specified in section S6.4, falls within the transverse, horizontal protection of the door's opening, but a longitudinal vertical plane tangent to the outboard side of the seat cushion is more than 10 inches from the innermost point on the inside surface of the door at a height between the H-point and shoulder reference point (as shown in figure 1 of the Federal Motor Vehicle Safety Standard No. 210) and longitudinally between the front edge of the cushion with the seat adjusted to its forwardmost position and the rear edge of the cushion with the seat adjusted to its rearmost position.

(4) Any side door that is designed to be easily attached to or removed (e.g., using simple hand tools such as pliers and/or a screw driver) from a motor vehicle manufactured for operation without doors.

(f) When tested according to the conditions of S6, each multipurpose passenger vehicle, truck and bus manufactured on or after September 1, 1998, shall meet the requirements of S5.1, S5.2, and S5.3 in a 33.5 miles per hour impact in which the vehicle is struck on either side by a moving deformable barrier. A part 572, subpart F test dummy is placed in the front outboard seating position on the struck side of the vehicle, and if the vehicle is equipped with rear seats, then another part 572, subpart F test dummy is placed on the outboard seating position of the second seat on the struck side of the vehicle. However, the second seat requirements do not apply to side-facing seats or to vehicles that have second seating areas that are so small that the part 572, subpart F dummy can not be accommodated according to the positioning procedure specified in S7.

S3.1 With any seats that may affect load upon or deflection of the side of the vehicle removed from the vehicle, each vehicle must be able to meet the requirements of S3.1.1 through S3.1.3.

S3.1.1 *Initial crush resistance*. The initial crush resistance shall not be less than 2,250 pounds.

S3.1.2 *Intermediate crush resistance*. The intermediate crush resistance shall not be less than 3,500 pounds.

S3.1.3 *Peak crush resistance*. The peak crush resistance shall not be less than two times the curb weight of the vehicle or 7,000 pounds, whichever is less.

S3.2 With seats installed in the vehicle, and located in any horizontal or vertical position to which they can be adjusted and at any seat back angle to which they can be adjusted, each vehicle must be able to meet the requirements of S3.2.1 through S3.2.3.

S3.2.1 *Initial crush resistance*. The initial crush resistance shall not be less than 2,250 pounds.

S3.2.2 *Intermediate crush resistance*. The intermediate crush resistance shall not be less than 4,375 pounds.

S3.2.3 *Peak crush resistance*. The peak crush resistance shall not be less than three and one half times the curb weight of the vehicle or 12,000 pounds, whichever is less.

S4. *Test procedures*. The following procedures apply to determining compliance with paragraph S3:

(a) Place side windows in their uppermost position and all doors in locked position. Place the sill of the side of the vehicle opposite to the side being tested against a rigid unyielding vertical surface. Fix the vehicle rigidly in position by means of tiedown attachments located at or forward of the front wheel centerline and at or rearward of the rear wheel centerline.

(b) Prepare a loading device consisting of a rigid steel cylinder or semicylinder 305 mm (12 inches) in diameter with an edge radius of 13 mm (½ inch). The length of the loading device shall be such that—

(1) For doors with windows, the top surface of the loading device is at least 13 mm (½ inch) above the bottom edge of the door window opening but not of a length that will cause contact with any structure above the bottom edge of the door window opening during the test.

(2) For doors without windows, the top surface of the loading device is at the same height above the ground as when the loading device is positioned in accordance with paragraph (b)(1) of this section for purposes of testing a front door with windows on the same vehicle.

(c) Locate the loading device as shown in Figure 1 (side view) of this section so that—

(1) Its longitudinal axis is vertical.

(2) Except as provided in paragraphs (c)(2) (i) and (ii) of this section, its longitudinal axis is laterally opposite the midpoint of a horizontal line drawn across the outer surface of the door 127 mm (5 inches) above the lowest point of the door, exclusive of any decorative or protective molding that is not permanently affixed to the door panel.

(i) For contoured doors on trucks, buses, and multipurpose passenger vehicles with a GVWR of 4,545 kg (10,000 pounds) or less, if the length of the horizontal line specified in (c)(2) is not equal to or greater than 559 mm (22 inches), the line is moved vertically up the side of the door to the point at which the line is 559 mm (22 inches) long. The longitudinal axis of the loading device is then located laterally opposite the midpoint of that line.

(ii) For double side doors on trucks, buses, and multipurpose passenger vehicles with a GVWR of 4,545 kg (10,000 pounds) or less, its longitudinal axis is laterally opposite the midpoint of a horizontal line drawn across the outer surface of the double door span, 127 mm (5 inches) above the lowest point on the doors, exclusive of any decorative or protective molding that is not permanently affixed to the door panel.

(3) Except as provided in paragraphs (c)(3) (i) and (ii) of this section, its bottom surface is in the same horizontal plane as the horizontal line drawn across the outer surface of the door 127 mm (5 inches) above the lowest point of the door, exclusive of any decorative or protective molding that is not permanently affixed to the door panel.

(i) For contoured doors on trucks, buses, and multipurpose passenger vehicles with a GVWR of 4,545 kg (10,000 pounds) or less, its bottom surface is in the lowest horizontal plane such that every point on the lateral projection of the bottom surface of the device on the door is at least 127 mm (5 inches), horizontally and vertically, from any edge of the door panel, exclusive of any decorative or protective molding that is not permanently affixed to the door panel.

(ii) For double side doors, its bottom surface is in the same horizontal plane as a horizontal line drawn across the outer surface of the double door span, 127 mm (5 inches) above the lowest point of the doors, exclusive of any decorative or protective molding that is not permanently affixed to the door panel.

(d) Using the loading device, apply a load to the outer surface of the door in an inboard direction normal to a vertical plane along the vehicle's longitudinal centerline. Apply the load continuously such that the loading device travel rate does not exceed one-half inch per second until the loading device travels 18 inches. Guide the loading device to prevent it from being rotated or displaced from its direction of travel. The test must be completed within 120 seconds.

(e) Record applied load versus displacement of the loading device, either continuously or in increments of not more than 1 inch or 200 pounds for the entire crush distance of 18 inches.

(f) Determine the initial crush resistance, intermediate crush resistance, and peak crush resistance as follows:

(1) From the results recorded in paragraph (e) of this section, plot a curve of load versus displacement and obtain the integral of the applied load with respect to the crush distances specified in paragraphs (f) (2) and (3) of this section. These quantities, expressed in inch-pounds and divided by the specified crush distances, represent the average forces in pounds required to deflect the door those distances.

(2) The initial crush resistance is the average force required to deform the door over the initial 6 inches of crush.

(3) The intermediate crush resistance is the average force required to deform the door over the initial 12 inches of crush.

(4) The peak crush resistance is the largest force recorded over the entire 18-inch crush distance.

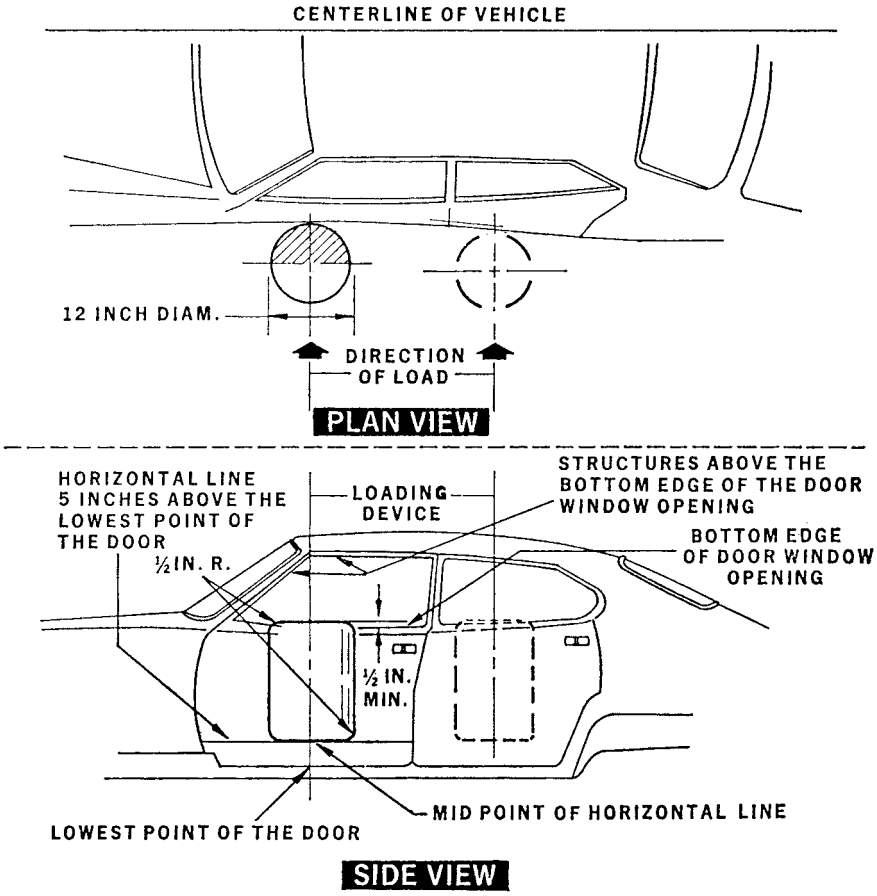

LOADING DEVICE LOCATION AND APPLICATION TO THE DOOR

FIGURE 1

S5. *Dynamic performance requirements.*

S5.1 *Thorax.* The Thoracic Trauma Index (TTI(d)) shall not exceed:

(a) 85 g for a passenger car with four side doors, and for any multipurpose passenger vehicle, truck, or bus; and,

(b) 90 g for a passenger car with two side doors, when calculated in accordance with the following formula:

$$TTI(d) = 1/2\ (G_R + G_{LS})$$

The term "G_R" is the greater of the peak accelerations of either the upper or lower rib, expressed in g's and the term "G_{LS}" is the lower spine (T12) peak acceleration, expressed in g's. The peak acceleration values are obtained in accordance with the procedure specified in S6.13.5.

S5.2 *Pelvis.* The peak lateral acceleration of the pelvis, as measured in accordance with S6.13.5, shall not exceed 130 g's.

S5.3 *Door opening.*

S5.3.1 Any side door, which is struck by the moving deformable barrier, shall not separate totally from the car.

S5.3.2 Any door (including a rear hatchback or tailgate), which is not struck by the moving deformable barrier, shall meet the following requirements:

S5.3.2.1 The door shall not disengage from the latched position;

S5.3.2.2 The latch shall not separate from the striker, and the hinge components shall not separate from each other or from their attachment to the vehicle.

S5.3.2.3 Neither the latch nor the hinge systems of the door shall pull out of their anchorages.

S6. *Test conditions.*

S6.1 *Test weight.* Each vehicle is loaded to its unloaded vehicle weight, plus 300 pounds or its rated cargo and luggage capacity (whichever is less), secured in the luggage or load-carrying area, plus the weight of the necessary anthropomorphic test dummies. Any added test equipment is located away from impact areas in secure places in the vehicle. The vehicle's fuel system is filled in accordance with the following procedure. With the test vehicle on a level surface, pump the fuel from the vehicle's fuel tank and then operate the engine until it stops. Then, add Stoddard solvent to the test vehicle's fuel tank in an amount which is equal to not less than 92 percent and not more than 94 percent of the fuel tank's usable capacity stated by the vehicle's manufacturer. In addition, add the amount of Stoddard solvent needed to fill the entire fuel system from the fuel tank through the engine's induction system.

S6.2 *Vehicle test attitude.* Determine the distance between a level surface and a standard reference point on the test vehicle's body, directly above each wheel opening, when the vehicle is in its ''as delivered'' condition. The ''as delivered'' condition is the vehicle as received at the test site, filled to 100 percent of all fluid capacities and with all tires inflated to the manufacturer's specifications listed on the vehicle's tire placard. Determine the distance between the same level surface and the same standard reference points in the vehicle's ''fully loaded condition.'' The ''fully loaded condition'' is the test vehicle loaded in accordance with S6.1. The load placed in the cargo area is centered over the longitudinal centerline of the vehicle. The pretest vehicle attitude is equal to either the as delivered or fully loaded attitude or between the as delivered attitude and the fully loaded attitude.

S6.3 *Adjustable seats.* Adjustable seats are placed in the adjustment position midway between the forward most and rearmost positions, and if separately adjustable in a vertical direction, are at the lowest position. If an adjustment position does not exist midway between the forwardmost and rearmost positions, the closest adjustment position to the rear of the midpoint is used.

S6.4 *Adjustable seat back placement.* Place adjustable seat backs in the manufacturer's nominal design riding position in the manner specified by the manufacturer. If the position is not specified, set the seat back at the first detent rearward of 25° from the vertical. Place each adjustable head restraint in its highest adjustment position. Position adjustable lumbar supports so that they are set in their released, i.e., full back position.

S6.5 *Adjustable steering wheels.* Adjustable steering controls are adjusted so that the steering wheel hub is at the geometric center of the locus it describes when it is moved through its full range of driving positions.

S6.6 *Windows.* Movable vehicle windows and vents are placed in the fully closed position on the struck side of the vehicle.

S6.7 *Convertible tops.* Convertibles and open-body type vehicles have the top, if any, in place in the closed passenger compartment configuration.

S6.8 *Doors.* Doors, including any rear hatchback or tailgate, are fully closed and latched but not locked.

S6.9 *Transmission and brake engagement.* For a vehicle equipped with a manual transmission, the transmission is placed in second gear. For a vehicle equipped with an automatic transmission, the transmission is placed in neutral. For all vehicles, the parking brake is engaged.

S6.10 *Moving deformable barrier.* The moving deformable barrier conforms to the dimensions shown in Figure 2 and specified in part 587.

S6.11 *Impact reference line.* Place a vertical reference line at the location described below on the side of the vehicle that will be struck by the moving deformable barrier:

S6.11.1 *Passenger cars.*

(a) For vehicles with a wheelbase of 114 inches or less, 37 inches forward of the center of the vehicle's wheelbase.

(b) For vehicles with a wheelbase greater than 114 inches, 20 inches rearward of the centerline of the vehicle's front axle.

S6.11.2 *Multipurpose passenger vehicles, trucks and buses.*

(a) For vehicles with a wheelbase of 98 inches or less, 12 inches rearward of the centerline of the vehicle's front axle, except as otherwise specified in paragraph (d) of this section.

(b) For vehicles with a wheelbase of greater than 98 inches but not greater than 114 inches, 37 inches forward of the center of the vehicle's wheelbase, except as otherwise specified in paragraph (d) of this section.

(c) For vehicles with a wheelbase greater than 114 inches, 20 inches rearward of the centerline of the vehicle's front axle, except as otherwise specified in paragraph (d) of this section.

(d) At the manufacturer's option, for different wheelbase versions of the same model vehicle, the impact reference line may be located by the following:

(1) Select the shortest wheelbase vehicle of the different wheelbase versions of the same model and locate on it the impact reference line at the location described in (a), (b) or (c) of this section, as appropriate;

(2) Measure the distance between the seating reference point (SgRP) and the impact reference line;

(3) Maintain the same distance between the SgRP and the impact reference line for the version being tested as that between the SgRP and the impact reference line for the shortest wheelbase version of the model.

(e) For the compliance test, the impact reference line will be located using the procedure used by the manufacturer as the basis for its certification of compliance with the requirements of this standard. If the manufacturer did not use any of the procedures in this section, or does not specify a procedure when asked by the agency, the agency may locate the impact reference line using either procedure.

S6.12 *Impact configuration.* The test vehicle (vehicle A in Figure 3) is stationary. The line of forward motion of the moving deformable barrier (vehicle B in Figure 3) forms an angle of 63 degrees with the centerline of the test vehicle. The longitudinal centerline of the moving deformable barrier is perpendicular to the longitudinal centerline of the test vehicle when the barrier strikes the test vehicle. In a test in which the test vehicle is to be struck on its left (right) side: All wheels of the moving deformable barrier are positioned at an angle of 27 ± 1 degrees to the right (left) of the centerline of the moving deformable barrier; and the left (right) forward edge of the moving deformable barrier is aligned so that a longitudinal plane tangent to that side passes through the impact reference line within a tolerance of ± 2 inches when the barrier strikes the test vehicle.

S6.13 *Anthropomorphic test dummies.*

S6.13.1 The anthropomorphic test dummies used for evaluation of a vehicle's side impact protection conform to the requirements of subpart F of part 572 of this chapter. In a test in which the test vehicle is to be struck on its left side, each dummy is to be configured and instrumented to be struck on its left side, in accordance with subpart F of part 572. In a test in which the test vehicle is to be struck on its right side, each dummy is to be configured and instrumented to be struck on its right side, in accordance with subpart F of part 572.

S6.13.2 Each part 572, subpart F test dummy specified is clothed in formfitting cotton stretch garments with short sleeves and midcalf length pants. Each foot of the test dummy is equipped with a size 11EEE shoe, which meets the configuration size, sole, and heel thickness specifications of MIL–S–13192 (1976) and weighs 1.25 ±0.2 pounds.

S6.13.3 Limb joints are set at between 1 and 2 g's. Leg joints are adjusted with the torso in the supine position.

S6.13.4 The stabilized temperature of the test dummy at the time of the

side impact test shall be at any temperature between 66 degrees F. and 78 degrees F.

S6.13.5 The acceleration data from the accelerometers mounted on the ribs, spine and pelvis of the test dummy are processed with the FIR100 software specified in 49 CFR 572.44(d). The data are processed in the following manner:

S6.13.5.1 Filter the data with a 300 Hz, SAE Class 180 filter;

S6.13.5.2 Subsample the data to a 1600 Hz sampling rate;

S6.13.5.3 Remove the bias from the subsampled data, and

S6.13.5.4 Filter the data with the FIR100 software specified in 49 CFR 572.44(d), which has the following characteristics—

S6.13.5.4.1 Passband frequency 100 Hz.

S6.13.5.4.2 Stopband frequency 189 Hz.

S6.13.5.4.3 Stopband gain −50 db.

S6.13.5.4.4 Passband ripple 0.0225 db.

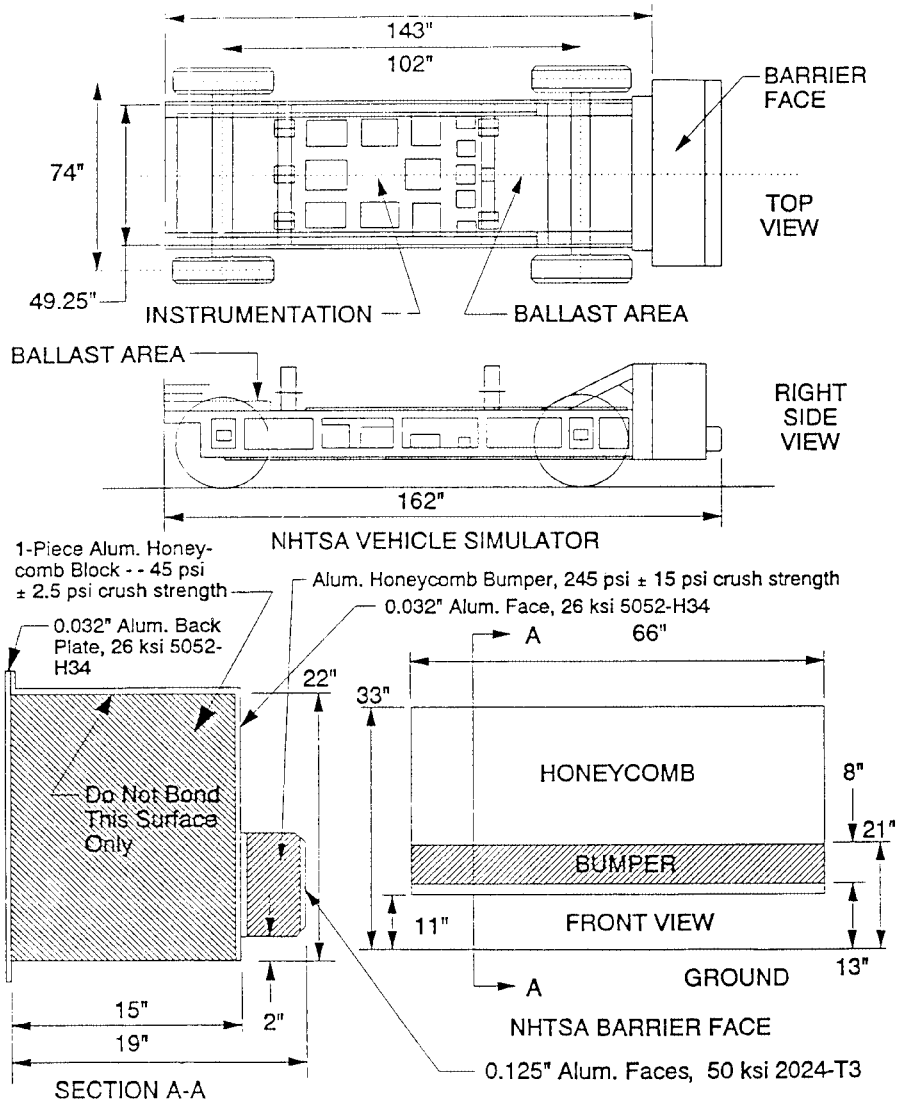

NHTSA SIDE IMPACTOR - MOVING DEFORMABLE BARRIER
FIGURE 2

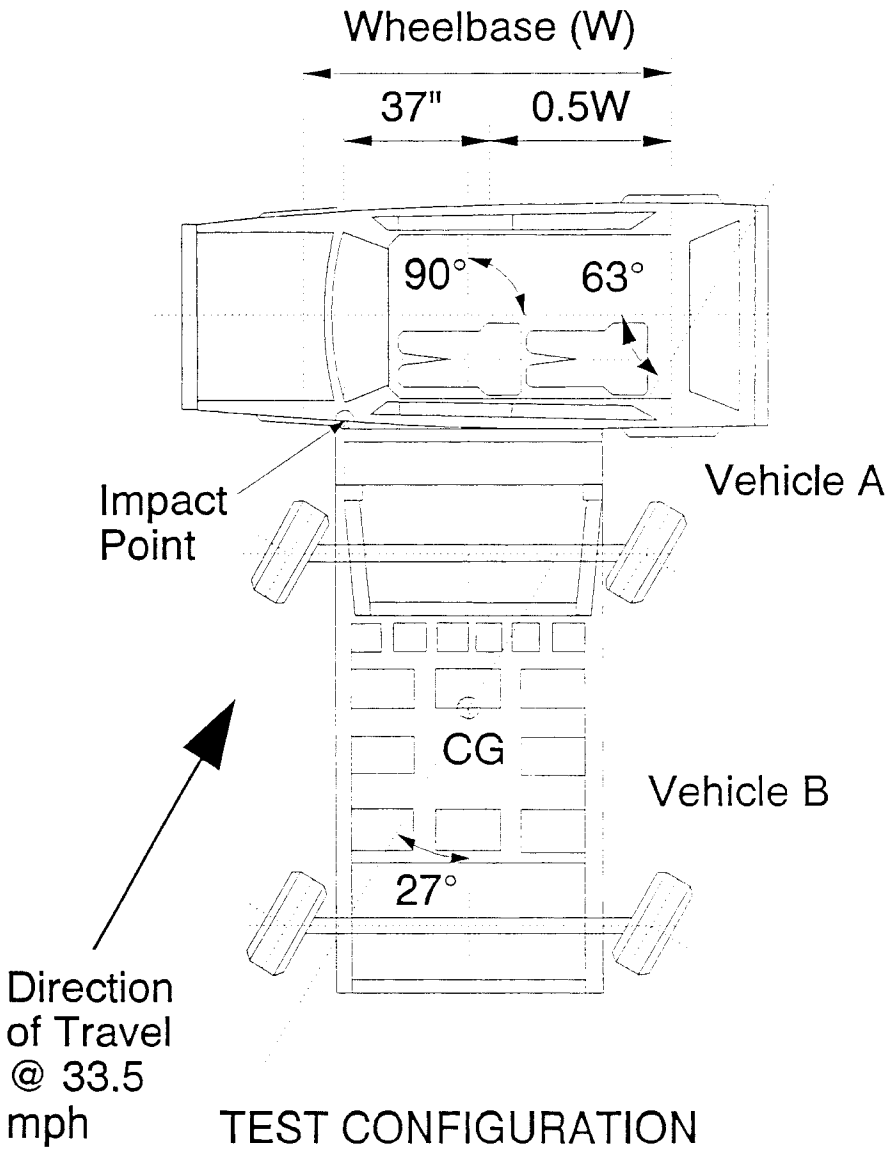

TEST CONFIGURATION

Figure 3

S7. *Positioning procedure for the part 572 subpart F test dummy.* Position a correctly configured test dummy, conforming to subpart F of part 572 of this chapter, in the front outboard seating position on the side of the test vehicle to be struck by the moving deformable barrier and, if the vehicle has a second

seat, position another conforming test dummy in the second seat outboard position on the same side of the vehicle, as specified in S7.1 through S7.4. Each test dummy is restrained using all available belt systems in all seating positions where such belt restraints are provided. In addition, any folding armrest is retracted.

S7.1 *Torso.* For a test dummy in any seating position, hold the dummy's head in place and push laterally on the non-impacted side of the upper torso in a single stroke with a force of 15–20 lb. towards the impacted side.

S7.1.1 *For a test dummy in the driver position.*

(a) *For a bench seat.* The upper torso of the test dummy rests against the seat back. The midsagittal plane of the test dummy is vertical and parallel to the vehicle's longitudinal centerline, and passes through the center of the steering wheel.

(b) *For a bucket seat.* The upper torso of the test dummy rests against the seat back. The midsagittal plane of the test dummy is vertical and parallel to the vehicle's longitudinal centerline, and coincides with the longitudinal centerline of the bucket seat.

S7.1.2 *For a test dummy in the front outboard passenger position.*

(a) *For a bench seat.* The upper torso of the test dummy rests against the seat back. The midsagittal plane of the test dummy is vertical and parallel to the vehicle's longitudinal centerline, and the same distance from the vehicle's longitudinal centerline as would be the midsagittal plane of a test dummy positioned in the driver position under S7.1.1.

(b) *For a bucket seat.* The upper torso of the test dummy rests against the seat back. The midsagittal plane of the test dummy is vertical and parallel to the vehicle's longitudinal centerline, and coincides with the longitudinal centerline of the bucket seat.

S7.1.3 *For a test dummy in either of the rear outboard passenger positions.*

(a) *For a bench seat.* The upper torso of the test dummy rests against the seat back. The midsagittal plane of the test dummy is vertical and parallel to the vehicle's longitudinal centerline, and, if possible, the same distance from the vehicle's longitudinal centerline as the midsagittal plane of a test dummy positioned in the driver position under S7.1.1. If it is not possible to position the test dummy so that its midsagittal plane is parallel to the vehicle longitudinal centerline and is at this distance from the vehicle's longitudinal centerline, the test dummy is positioned so that some portion of the test dummy just touches, at or above the seat level, the side surface of the vehicle, such as the upper quarter panel, an armrest, or any interior trim (i.e., either the broad trim panel surface or a smaller, localized trim feature).

(b) *For a bucket or contoured seat.* The upper torso of the test dummy rests against the seat back. The midsagittal plane of the test dummy is vertical and parallel to the vehicle's longitudinal centerline, and coincides with the longitudinal centerline of the bucket or contoured seat.

S7.2 *Pelvis.*

S7.2.1 *H-point.* The H-points of each test dummy coincide within ½ inch in the vertical dimension and ½ inch in the horizontal dimension of a point ¼ inch below the position of the H-point determined by using the equipment for the 50th percentile and procedures specified in SAE J826 (1980) (incorporated by reference; see §571.5), except that Table 1 of SAE J826 is not applicable. The length of the lower leg and thigh segments of the H-point machine are adjusted to 16.3 and 15.8 inches, respectively.

S7.2.2 *Pelvic angle.* As determined using the pelvic angle gauge (GM drawing 78051–532 incorporated by reference in part 572, subpart E of this chapter) which is inserted into the H-point gauging hole of the dummy, the angle of the plane of the surface on the lumbar-pelvic adaptor on which the lumbar spine attaches is 23 to 25 degrees from the horizontal, sloping upward toward the front of the vehicle.

S7.3 *Legs.*

S7.3.1 *For a test dummy in the driver position.* The upper legs of each test dummy rest against the seat cushion to the extent permitted by placement of the feet. The left knee of the dummy is positioned such that the distance from the outer surface of the knee pivot bolt to the dummy's midsagittal

plane is six inches. To the extent practicable, the left leg of the test dummy is in a vertical longitudinal plane.

S7.3.2 *For a test dummy in the outboard passenger positions*. The upper legs of each test dummy rest against the seat cushion to the extent permitted by placement of the feet. The initial distance between the outboard knee clevis flange surfaces is 11.5 inches. To the extent practicable, both legs of the test dummies in outboard passenger positions are in vertical longitudinal planes. Final adjustment to accommodate placement of feet in accordance with S7.4 for various passenger compartment configurations is permitted.

S7.4 *Feet*.

S7.4.1 *For a test dummy in the driver position*. The right foot of the test dummy rests on the undepressed accelerator with the heel resting as far forward as possible on the floorpan. The left foot is set perpendicular to the lower leg with the heel resting on the floorpan in the same lateral line as the right heel.

S7.4.2 *For a test dummy in the front outboard passenger position*. The feet of the test dummy are placed on the vehicle's toeboard with the heels resting on the floorpan as close as possible to the intersection of the toeboard and floorpan. If the feet cannot be placed flat on the toeboard, they are set perpendicular to the lower legs and placed as far forward as possible so that the heels rest on the floorpan.

S7.4.3 *For a test dummy in either of the rear outboard passenger positions*. The feet of the test dummy are placed flat on the floorpan and beneath the front seat as far as possible without front seat interference. If necessary, the distance between the knees can be changed in order to place the feet beneath the seat.

S8. *Phase-in of dynamic test and performance requirements*.

S8.1–S8.2 [Reserved]

S8.3 *Passenger cars manufactured on or after September 1, 1995 and before September 1, 1996*.

S8.3.1 The number of passenger cars complying with the requirements of S3(c) shall be not less than 40 percent of:

(a) The average annual production of passenger cars manufactured on or after September 1, 1992, and before September 1, 1995, by each manufacturer, or

(b) The manufacturer's annual production of passenger cars during the period specified in S8.3.

S8.4 *Passenger cars produced by more than one manufacturer*.

S8.4.1 For the purposes of calculating average annual production of passenger cars for each manufacturer and the number of passenger cars manufactured by each manufacturer under S8.1, S8.2, and S8.3, a passenger car produced by more than one manufacturer shall be attributed to a single manufacturer as follows, subject to S8.4.2:

(a) A passenger car which is imported shall be attributed to the importer.

(b) A passenger car manufactured in the United States by more than one manufacturer, one of which also markets the vehicle, shall be attributed to the manufacturer which markets the vehicle.

S8.4.2 A passenger car produced by more than one manufacturer shall be attributed to any one of the vehicle's manufacturers specified by an express written contract, reported to the National Highway Traffic Safety Administration under 49 CFR part 586, between the manufacturer so specified and the manufacturer to which the vehicle would otherwise be attributed under S8.4.1.

[36 FR 22902, Dec. 2, 1971, as amended at 45 FR 17018, Mar. 17, 1980; 55 FR 45752, Oct. 30, 1990; 56 FR 27437, June 14, 1991; 56 FR 47011, Sept. 17, 1991; 57 FR 21615, May 21, 1992; 57 FR 30921 and 30922, July 13, 1992; 58 FR 14169, Mar. 16, 1993; 60 FR 38761, July 28, 1995; 60 FR 57839, Nov. 22, 1995; 63 FR 16140, Apr. 2, 1998]

§ 571.215 [Reserved]

§ 571.216 Standard No. 216; Roof crush resistance.

S1. *Scope*. This standard establishes strength requirements for the passenger compartment roof.

S2. *Purpose*. The purpose of this standard is to reduce deaths and injuries due to the crushing of the roof into the occupant compartment in rollover crashes.

S3. *Application*. This standard applies to passenger cars, and to multipurpose passenger vehicles, trucks and buses

with a GVWR of 2722 kilograms or less. However, it does not apply to—

(a) School buses;

(b) Vehicles that conform to the rollover test requirements (S5.3) of Standard No. 208 (§571.208) by means that require no action by vehicle occupants; or

(c) Convertibles, except for optional compliance with the standard as an alternative to the rollover test requirements in S5.3 of Standard No. 208.

S4. *Definitions*.

Altered roof means the replacement roof on a motor vehicle whose original roof has been removed, in part or in total, and replaced by a roof that is higher than the original roof. The replacement roof on a motor vehicle whose original roof has been replaced, in whole or in part, by a roof that consists of glazing materials, such as those in T-tops and sunroofs, and is located at the level of the original roof, is not considered to be an altered roof.

Raised roof means, with respect to a roof which includes an area that protrudes above the surrounding exterior roof structure, that protruding area of the roof.

Roof over the front seat area means the portion of the roof, including windshield trim, forward of a transverse vertical plane passing through a point 162 mm rearward of the SgRP of the rearmost front outboard seating position.

Windshield trim means molding of any material between the windshield glazing and the exterior roof surface, including material that covers a part of either the windshield glazing or exterior roof surface.

S5. *Requirements*. Subject to S5.1, when the test device described in S6 is used to apply a force to either side of the forward edge of a vehicle's roof in accordance with the procedures of S7, the lower surface of the test device must not move more than 127 millimeters. The applied force in Newtons is equal to 1.5 times the unloaded vehicle weight of the vehicle, measured in kilograms and multiplied by 9.8, but does not exceed 22,240 Newtons for passenger cars. Both the left and right front portions of the vehicle's roof structure must be capable of meeting the requirements. A particular vehicle need not meet further requirements after being tested at one location.

S5.1 For multipurpose passenger vehicles, trucks and buses that have a raised roof or altered roof, manufacturers have the option of using the test procedures of S8 instead of the procedures of S7 until October 25, 2000. The option of using the test procedures of S8 ceases to be available on that date.

S6. *Test device*. The test device is a rigid unyielding block whose lower surface is a flat rectangle measuring 762 millimeters by 1,829 millimeters.

S7. *Test procedure*. Each vehicle must be capable of meeting the requirements of S5 when tested in accordance with the procedure in S7.1 through 7.6.

S7.1 Place the sills or the chassis frame of the vehicle on a rigid horizontal surface, fix the vehicle rigidly in position, close all windows, close and lock all doors, and secure any convertible top or removable roof structure in place over the occupant compartment. Remove roof racks or other non-structural components.

S7.2 Orient the test device as shown in Figure 1 of this section, so that—

(a) Its longitudinal axis is at a forward angle (in side view) of 5 degrees below the horizontal, and is parallel to the vertical plane through the vehicle's longitudinal centerline;

(b) Its transverse axis is at an outboard angle, in the front view projection, of 25 degrees below the horizontal.

S7.3 Maintaining the orientation specified in S7.2—

(a) Lower the test device until it initially makes contact with the roof of the vehicle.

(b) Position the test device so that—

(1) The longitudinal centerline on its lower surface is on the initial point of contact, or on the center of the initial contact area, with the roof; and

(2) Except as specified in S7.4, the midpoint of the forward edge of the lower surface of the test device is within 10 mm of the transverse vertical plane 254 mm forward of the forwardmost point on the exterior surface of the roof, including windshield trim, that lies in the longitudinal vertical plane passing through the vehicle's longitudinal centerline.

S7.4 If the vehicle being tested is a multipurpose passenger vehicle, truck,

or bus that has a raised roof or altered roof, and the initial contact point of the test device is on the raised roof or altered roof to the rear of the roof over the front seat area, the plate is positioned so that the midpoint of the rearward edge of the lower surface of the test device is within 10 mm of the transverse vertical plane located at the rear of the roof over the front seat area.

S7.5 Apply force so that the test device moves in a downward direction perpendicular to the lower surface of the test device at a rate of not more than 13 millimeters per second until reaching the force level specified in S5. Guide the test device so that throughout the test it moves, without rotation, in a straight line with its lower surface oriented as specified in S7.2(a) and S7.2(b). Complete the test within 120 seconds.

S7.6 Measure the distance that the test device moved, i.e., the distance between the original location of the lower surface of the test device and its location as the force level specified in S5 is reached.

S8 *Alternate test procedure for multipurpose passenger vehicles, trucks and buses that have a raised roof or altered roof manufactured until October 25, 2000 (see S5.1).* Each vehicle shall be capable of meeting the requirements of S5 when tested in accordance with the following procedure.

S8.1 Place the sills or the chassis frame of the vehicle on a rigid horizontal surface, fix the vehicle rigidly in position, close all windows, close and lock all doors, and secure any convertible top or removable roof structure in place over the passenger compartment.

S8.2 Orient the test device as shown in Figure 2, so that—

(a) Its longitudinal axis is at a forward angle (side view) of 5° below the horizontal, and is parallel to the vertical plane through the vehicle's longitudinal centerline;

(b) Its lateral axis is at a lateral outboard angle, in the front view projection, of 25° below the horizontal;

(c) Its lower surface is tangent to the surface of the vehicle; and

(d) The initial contact point, or center of the initial contact area, is on the longitudinal centerline of the lower surface of the test device and 254 millimeters from the forwardmost point of that centerline.

S8.3 Apply force in a downward direction perpendicular to the lower surface of the test device at a rate of not more than 13 millimeters per second until reaching a force in Newtons of 1½ times the unloaded vehicle weight of the tested vehicle, measured in kilograms and multiplied by 9.8. Complete the test within 120 seconds. Guide the test device so that throughout the test it moves, without rotation, in a straight line with its lower surface oriented as specified in S8.2(a) through S8.2(d).

S8.4 Measure the distance that the test device moves, *i.e.*, the distance between the original location of the lower surface of the test device and its location as the force level specified in S8.3 is reached.

FIGURE 1 TO § 571.216

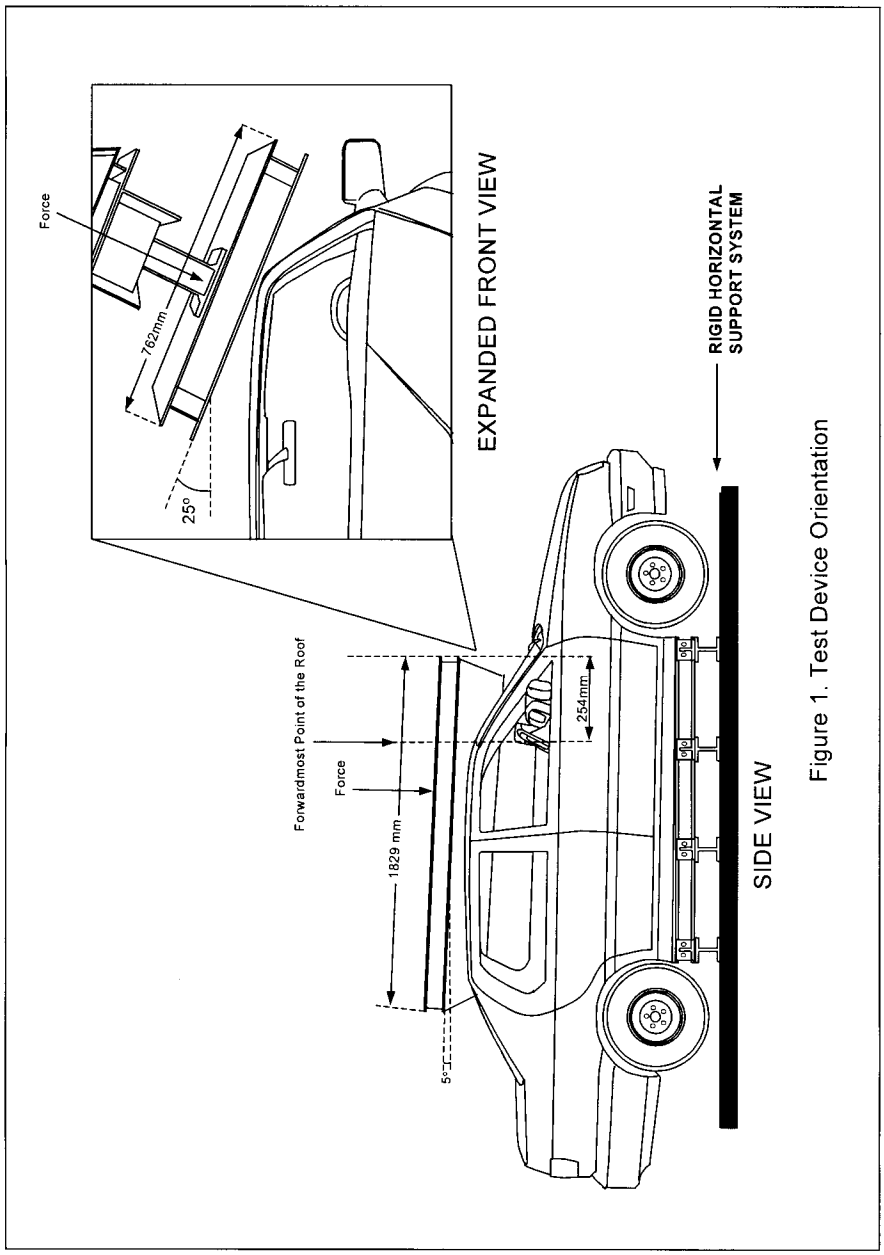

FIGURE 2 TO §571.216

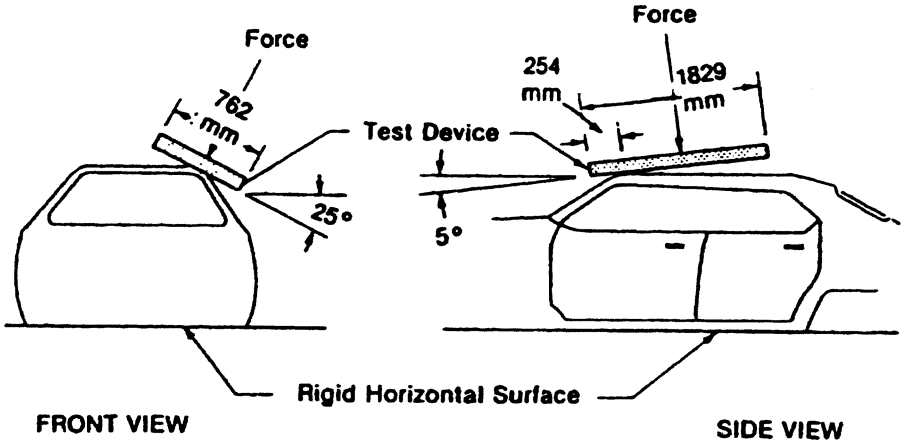

Figure 2.- Test Device Location And Application To The Roof

[36 FR 23300, Dec. 8, 1971, as amended at 38 FR 21930, Aug. 14, 1973; 56 FR 15517, Apr. 17, 1991; 58 FR 5633, Jan. 22, 1993; 60 FR 13647, Mar. 14, 1995; 64 FR 22578, Apr. 27, 1999; 65 FR 4581, Jan. 31, 2000]

§ 571.217 Standard No. 217; Bus emergency exits and window retention and release.

S1. *Scope.* This standard establishes requirements for the retention of windows other than windshields in buses, and establishes operating forces, opening dimensions, and markings for bus emergency exits.

S2. *Purpose.* The purpose of this standard is to minimize the likelihood of occupants being thrown from the bus and to provide a means of readily accessible emergency egress.

S3. *Application.* This standard applies to buses, except buses manufactured for the purpose of transporting persons under physical restraint.

S4. *Definitions. Adjacent seat* means a designated seating position located so that some portion of its occupant space is not more than 10 inches from an emergency exit, for a distance of at least 15 inches measured horizontally and parallel to the exit.

Daylight opening means the maximum unobstructed opening of an emergency exit when viewed from a direction perpendicular to the plane of the opening.

Mid-point of the passenger compartment means any point on a vertical transverse plane bisecting the vehicle longitudinal centerline that extends between the two vertical transverse planes which define the foremost and rearmost limits of the passenger compartment.

Occupant space means the space directly above the seat and footwell, bounded vertically by the ceiling and horizontally by the normally positioned seat back and the nearest obstruction of occupant motion in the direction the seat faces.

Passenger compartment means space within the school bus interior that is between a vertical transverse plane located 76 centimeters in front of the forwardmost passenger seating reference point and a vertical transverse plane tangent to the rear interior wall of the bus at the vehicle centerline.

Post and roof bow panel space means the area between two adjacent post and roof bows.

Push-out window means a vehicle window designed to open outward to provide for emergency egress.

Sliding window means a bus window designed to open by moving vertically or horizontally to provide emergency egress.

S5. *Requirements.*

S5.1 *Window retention.* Except as provided in S5.1.2, each piece of window glazing and each surrounding window frame when tested in accordance with the procedure in S5.1.1 under the conditions of S6.1 through S6.3, shall be retained by its surrounding structure in a manner that prevents the formation of any opening large enough to admit the passage of a 4-inch diameter sphere under a force, including the weight of the sphere, of 5 pounds until any one of the following events occurs:

(a) A force of 1,200 pounds is reached.

(b) At least 80 percent of the glazing thickness has developed cracks running from the load contact region to the periphery at two or more points, or shattering of the glazing occurs.

(c) The inner surface of the glazing at the center of force application has moved relative to the window frame, along a line perpendicular to the undisturbed inner surface, a distance equal to one-half of the square root of the minimum surface dimension measured through the center of the area of the entire sheet of window glazing.

S5.1.1 An increasing force shall be applied to the window glazing through the head form specified in Figure 4, outward and perpendicular to the undisturbed inside surface at the center of the area of each sheet of window glazing, with a head form travel of 2 inches per minute.

S5.1.2 The requirements of this standard do not apply to a window whose minimum surface dimension measured through the center of its area is less than 8 inches.

S5.2 *Provision of emergency exits.*

S5.2.1 Buses other than school buses shall meet the requirements of either S5.2.2 or S5.2.3. School buses shall meet the requirements of S5.2.3.

S5.2.1.1 A bus with GVWR of more than 10,000 pounds may satisfy the unobstructed openings requirement by providing at least one side door for each three passenger seating positions in the vehicle.

S5.2.2 *Buses other than school buses.*

S5.2.2.1 Buses other than school buses shall provide unobstructed openings for emergency exit which collectively amount, in total square centimeters, to at least 432 times the number of designated seating positions on the bus. At least 40 percent of the total required area of unobstructed openings, computed in the above manner, shall be provided on each side of a bus. However, in determining the total unobstructed openings provided by a bus, no emergency exit, regardless of its area, shall be credited with more than 3,458 square centimeters of the total area requirement.

S5.2.2.2 *Buses with GVWR of more than 10,000 pounds.* Buses with a GVWR of more than 10,000 pounds shall meet the unobstructed openings requirements in S5.2.2.1 by providing side exits and at least one rear exit that conforms to S5.3 through S5.5. The rear exit shall meet the requirements of S5.3 through S5.5 when the bus is upright and when the bus is overturned on either side, with the occupant standing facing the exit. When the bus configuration precludes installation of an accessible rear exit, a roof exit that meets the requirements of S5.3 through S5.5 when the bus is overturned on either side, with the occupant standing facing the exit, shall be provided in the rear half of the bus.

S5.2.2.3 *Buses with GVWR of 10,000 pounds or less.* Buses other than school buses with GVWR of 10,000 pounds or less may meet the unobstructed openings requirement in S5.2.2.1 by providing:

(a) Devices that meet the requirements of S5.3 through S5.5 without using remote controls or central power systems;

(b) Windows that can be opened manually to a position that provides an opening large enough to admit unobstructed passage, keeping a major axis horizontal at all times, of an ellipsoid generated by rotating about its minor axis an ellipse having a major axis of 50 centimeters and a minor axis of 33 centimeters; or

(c) Doors.

S5.2.3 *School buses.* Except as provided in S5.2.3.4, each school bus shall comply with S5.2.3.1 through S5.2.3.3.

S5.2.3.1. Each school bus shall be equipped with the exits specified in either S5.2.3.1(a) or S5.2.3.1(b), chosen at the option of the manufacturer.

(a) One rear emergency door that opens outward and is hinged on the right side (either side in the case of a bus with a GVWR of 10,000 pounds or less), and the additional exits, if any, specified by Table 1.

(b) One emergency door on the vehicle's left side that is hinged on its forward side and meets the requirements of S5.2.3.2(a), and a push-out rear window that provides a minimum opening clearance 41 centimeters high and 122 centimeters wide and meets the requirements of S5.2.3.2(c), and the additional exits, if any, specified by Table 2.

TABLE 1

Seating capacity	Additional exits required *
1–45	None.
46–62	1 left side exit door or 2 exit windows.
63–70	1 left side exit door or 2 exit windows, and 1 roof exit.
71 and above.	1 left side exit door or 2 exit windows, and 1 roof exit, and any combination of door, roof, or windows such that the total capacity credit specified in Table 3 for these exits, plus 70, is greater than the seating capacity of the bus.

* Side emergency exit doors must meet the requirements of S5.2.3.2(a), emergency roof exits must meet the requirements of S5.2.3.2(b), emergency window exits must meet the requirements of S5.2.3.2(c).

TABLE 2

Seating capacity	Additional exits required *
1–57	None.
58–74	1 right side exit door or 2 exit windows.
75–82	1 right side exit door or 2 exit windows, and 1 roof exit.
83 and above.	1 right side exit door or 2 windows, and 1 ments of S5.3 through S5.5 when the bus is overturned on either side, with the occupant standing facing the exit, shall be provided in the rear half of the bus.

S5.2.2.3 *Buses with GVWR of 10,000 pounds or less*. Buses other than school buses with GVWR of 10,000 pounds or less may meet the unobstructed openings requirement in S5.2.2.1 by providing:

(a) Devices that meet the requirements of S5.3 through S5.5 without using remote controls or central power systems;

(b) Windows that can be opened manually to a position that provides an opening large enough to admit unobstructed passage, keeping a major axis horizontal at all times, of an ellipsoid generated by rotating about its minor axis an ellipse having a major axis of 50 centimeters and a minor axis of 33 centimeters; or

(c) Doors.

S5.2.3 *School buses*. Except as provided in S5.2.3.4, each school bus shall comply with S5.2.3.1 through S5.2.3.3.

S5.2.3.1. Each school bus shall be equipped with the exits specified in either S5.2.3.1(a) or S5.2.3.1(b), chosen at the option of the manufacturer.

(a) One rear emergency door that opens outward and is hinged on the right side (either side in the case of a bus with a GVWR of 10,000 pounds or less), and the additional exits, if any, specified by Table 1.

(b) One emergency door on the vehicle's left side that is hinged on its forward side and meets the requirements of S5.2.3.2(a), and a push-out rear window that provides a minimum opening clearance 41 centimeters high and 122 centimeters wide and meets the requirements of S5.2.3.2(c), and the additional exits, if any, specified by Table 2.

TABLE 1

Seating capacity	Additional exits required *
1–45	None.
46–62	1 left side exit door or 2 exit windows.
63–70	1 left side exit door or 2 exit windows, and 1 roof exit.
71 and above.	1 left side exit door or 2 exit windows, and 1 roof exit, and any combination of door, roof, or windows such that the total capacity credit specified in Table 3 for these exits, plus 70, is greater than the seating capacity of the bus.

* Side emergency exit doors must meet the requirements of S5.2.3.2(a), emergency roof exits must meet the requirements of S5.2.3.2(b), emergency window exits must meet the requirements of S5.2.3.2(c).

TABLE 2

Seating capacity	Additional exits required *
1–57	None.
58–74	1 right side exit door or 2 exit windows.
75–82	1 right side exit door or 2 exit windows, and 1 roof exit.

TABLE 2—Continued

Seating capacity	Additional exits required*
83 and above.	1 right side exit door or 2 windows, and 1 roof exit, and any combination of door, roof, or windows such that the total capacity credit specified in Table 3 for these exits plus 82 is greater than the capacity of the bus.

*Side emergency exit doors must meet the requirements of S5.2.3.2(a), emergency roof exits must meet the requirements of S5.2.3.2(b), emergency window exits must meet the requirements of S5.2.3.2(c).

TABLE 3

Exit Type	Capacity Credit
Side Door	16
Window	8
Roof Exit	8

(c) The area of an opening equipped with a wheelchair lift may be credited toward the required additional exits if it meets the requirements of paragraphs (a) or (b) of S5.2.3.1 and if the lift folds or stows in such a manner that the area is available for use by persons not needing the lift. With the lift in the folded or stowed position, such opening is considered a side emergency exit door.

S5.2.3.2 All emergency exits required by S5.2.3.1(a) and S5.2.3.1(b) shall meet the following criteria:

(a) *Side emergency exit doors.*

(1) Each side emergency exit door shall be hinged on its forward side.

(2) The first side emergency exit door installed pursuant to Table 1, shall be located on the left side of the bus and as near as practicable to the mid-point of the passenger compartment. A second side emergency exit door installed pursuant to Table 1 shall be located on the right side of the bus. In the case of a bus equipped with three side emergency door exits pursuant to Table 1, the third shall be located on the left side of the bus.

(3) The first side emergency exit door installed pursuant to Table 2 shall be located on the right side of the bus. A second side emergency door exit installed pursuant to Table 2 shall be located on the left side of the bus. In the case of a bus equipped with three side emergency door exits pursuant to Table 2, the third shall be located on the right side of the bus.

(4) No two side emergency exit doors shall be located, in whole or in part, within the same post and roof bow panel space.

(b) *Emergency roof exit.* (1) Each emergency roof exit shall be hinged on its forward side, and shall be operable from both inside and outside the vehicle.

(2) In a bus equipped with a single emergency roof exit, the exit shall be located as near as practicable to the midpoint of the passenger compartment.

(3) In a bus equipped with two emergency roof exits, one shall be located as near as practicable to a point equidistant between the midpoint of the passenger compartment and the foremost limit of the passenger compartment and the other shall be located as near as practicable to a point equidistant between the midpoint of the passenger compartment and the rearmost point of the passenger compartment.

(4) In a bus equipped with three or more emergency roof exits, the roof exits shall be installed so that, to the extent practicable, the longitudinal distance between each pair of adjacent roof exits is the same and equal to the distance from the foremost point of the passenger compartment to the foremost roof exit and to the distance from the rearmost point of that compartment to the rearmost roof exit.

(5) Except as provided in paragraph (b)(6) of this section, each emergency roof exit shall be installed with its longitudinal centerline coinciding with a longitudinal vertical plane passing through the longitudinal centerline of the school bus.

(6) In a bus equipped with two or more emergency roof exits, for each roof exit offset from the longitudinal vertical plane specified in paragraph (b)(5) of this section, there shall be another roof exit offset from that plane an equal distance to the other side.

(c) *Emergency exit windows.* A bus equipped with emergency exit windows shall have an even number of such windows, not counting the push-out rear window required by S5.2.3.1(b). Any side emergency exit windows shall be evenly divided between the right and left sides of the bus. School buses shall

not be equipped with horizontally-sliding emergency exit windows. Further, except for buses equipped with rear push-out emergency exit windows in accordance with S5.2.3.1(b), school buses shall not be equipped with both sliding and push-out emergency exit windows.

S5.2.3.3 The engine starting system of a bus shall not operate if any emergency exit is locked from either inside or outside the bus. For purposes of this requirement, ''locked'' means that the release mechanism cannot be activated and the exit opened by a person at the exit without a special device such as a key or special information such as a combination.

S5.2.3.4 Each school bus manufactured before September 1, 1994 may, at the manufacturer's option, comply with either S5.2.3.4(a) or S5.2.3.4(b) instead of S5.2.3.1 through S5.2.3.3.

(a) Each bus shall be equipped with one rear emergency door that opens outward and is hinged on the right side (either side in the case of a bus with a GVWR of 4,536 kilograms or less); or

(b) Each bus shall be equipped with one emergency door on the vehicle's left side that is hinged on its forward side and meets the requirements of S5.2.3.2(a), and a push-out rear window that provides a minimum opening clearance 41 centimeters high and 122 centimeters wide and meets the requirements of S5.2.3.2(c).

S5.3 *Emergency exit release.*

S5.3.1 Each emergency exit not required by S5.2.3 shall be releasable by operating one or two mechanisms located within the regions specified in Figure 1, Figure 2, or Figure 3. The lower edge of the region in Figure 1, and Region B in Figure 2, shall be located 13 centimeters above the adjacent seat, or 5 centimeters above the arm rest, if any, whichever is higher.

S5.3.2 When tested under the conditions of S6., both before and after the window retention test required by S5.1, each emergency exit not required by S5.2.3 shall allow manual release of the exit by a single occupant using force applications each of which conforms, at the option of the manufacturer, either to S5.3.2 (a) or (b) of this section. Each exit shall have not more than two release mechanisms. In the case of exits with one release mechanism, the mechanism shall require two force applications to release the exit. In the case of exits with two release mechanisms, each mechanism shall require one force application to release the exit. At least one of the force applications for each exit shall differ from the direction of the initial motion to open the exit by not less than 90° and no more than 180°.

(a) Low-force application.

(1) *Location.* As shown in Figure 1 or Figure 3.

(2) *Type of motion.* Rotary or straight.

(3) *Magnitude.* Not more than 20 pounds.

(b) High force application.

(1) *Location.* As shown in Figure 2 or Figure 3.

(2) *Type of motion.* Straight, perpendicular to the undisturbed exit surface.

(3) *Magnitude.* Not more than 60 pounds.

S5.3.3 *School bus emergency exit release.*

S5.3.3.1 When tested under the conditions of S6., both before and after the window retention test required by S5.1, each school bus emergency exit door shall allow manual release of the door by a single person, from both inside and outside the passenger compartment, using a force application that conforms to S5.3.3.1 (a) through (c) of this section, except a school bus with a GVWR of 10,000 pounds or less is not required to conform to S5.3.3.1 (a). The release mechanism shall operate without the use of remote controls or tools, and notwithstanding any failure of the vehicle's power system. When the release mechanism is not in the position that causes an emergency exit door to be closed and the vehicle's ignition is in the ''on'' position, a continuous warning sound shall be audible at the driver's seating position and in the vicinity of the emergency exit door.

(a) *Location:* Within the high force access region shown in Figure 3A for a side emergency exit door, and in figure 3D for a rear emergency exit door.

(b) Type of motion: Upward from inside the bus and, at the discretion of the manufacturer, from outside the bus. Buses with a GVWR of 10,000 pounds or less shall provide interior release mechanisms that operate by either an upward or pull-type motion.

The pull-type motion shall be used only when the release mechanism is recessed in such a manner that the handle, level, or other activating device, before being activated, does not protrude beyond the rim of the recessed receptacle.

(c) *Magnitude of force:* Not more than 178 newtons.

S5.3.3.2 When tested under the conditions of S6., both before and after the window retention test required by S5.1, each school bus emergency exit window shall allow manual release of the exit by a single person, from inside the passenger compartment, using not more than two release mechanisms located in specified low-force or high-force regions (at the option of the manufacturer) with force applications and types of motions that conform to either S5.3.3.2 (a) or (b) of this section. In the case of windows with one release mechanism, the mechanism shall require two force applications to release the exit. In the case of windows with two release mechanisms, each mechanism shall require one application to release the exit. At least one of the force applications for each window shall differ from the direction of the initial motion to open the exit by no less than 90° and no more than 180°. Each release mechanism shall operate without the use of remote controls or tools, and notwithstanding any failure of the vehicle's power system. When a release mechanism is open and the vehicle's ignition is in the ''on'' position, a continuous warning shall be audible at the drivers seating position and in the vicinity of that emergency exit.

(a) Emergency exit windows—Low-force application.

(1) *Location:* Within the low-force access regions shown in Figures 1 and 3 for an emergency exit window.

(2) *Type of motion:* Rotary or straight.

(3) *Magnitude:* Not more than 89 newtons.

(b) Emergency exit windows—High-force application.

(1) *Location:* Within the high-force access regions shown in Figures 2 and 3 for an emergency exit window.

(2) *Type of motion:* Straight and perpendicular to the undisturbed exit surface.

(3) *Magnitude:* Not more than 178 newtons.

S5.3.3.3 When tested under the conditions of S6., both before and after the window retention test required by S5.1, each school bus emergency roof exit shall allow manual release of the exit by a single person from both inside and outside the passenger compartment, using not more than two release mechanisms located at specified low-force or high-force regions (at the option of the manufacturer) with force applications and types of motions that conform either to S5.3.3.3 (a) or (b) of this section. In the case of roof exits with one release mechanism, the mechanism shall require two force applications to release the exit. In the case of roof exits with two release mechanisms, each mechanism shall require one application to release the exit. At least one of the force applications for each roof exit shall differ from the direction of the initial push-out motion of the exit by no less than 90° and no more than 180°.

(a) Emergency roof exits—Low-force application.

(1) *Location:* Within the low force access regions shown in Figure 3B, in the case of buses whose roof exits are not offset from the plane specified in S5.2.3.2(b)(5). In the case of buses which have roof exits offset from the plane specified in S5.2.3.2(b)(5), the amount of offset shall be used to recalculate the dimensions in Figure 3B for the offset exits.

(2) *Type of motion:* Rotary or straight.

(3) *Magnitude:* Not more than 89 newtons.

(b) Emergency roof exits—High-force application.

(1) *Location:* Within the high force access regions shown in Figure 3B, in the case of buses whose roof exits are not offset from the plane specified in S5.2.3.2(b)(5). In the case of buses which have roof exits offset from the plane specified in S5.2.3.2(b)(5), the amount of offset shall be used to recalculate the dimensions in Figure 3B for the offset exits.

(2) *Type of motion:* Straight and perpendicular to the undisturbed exit surface.

(3) *Magnitude:* Not more than 178 newtons.

S5.4 *Emergency exit opening.*

S5.4.1 After the release mechanism has been operated, each emergency exit not required by S5.2.3 shall, under the conditions of S6., both before and after the window retention test required by S5.1, using the reach distances and corresponding force levels specified in S5.3.2, allow manual opening by a single occupant to a position that provides an opening large enough to admit unobstructed passage, keeping a major axis horizontal at all times, of an ellipsoid generated by rotating about its minor axis an ellipse having a major axis of 50 centimeters and a minor axis of 33 centimeters.

S5.4.2 *School bus emergency exit opening.*

S5.4.2.1 *School buses with a GVWR of more than 10,000 pounds.*

(a) *Emergency exit doors.* After the release mechanism has been operated, each emergency exit door of a school bus shall, under the conditions of S6., before and after the window retention test required by S5.1, using the force levels specified in S5.3.3, be manually extendable by a single person to a position that permits:

(1) In the case of a rear emergency exit door, an opening large enough to permit unobstructed passage of a rectangular parallelepiped 114 centimeters high, 61 centimeters wide, and 30 centimeters deep, keeping the 114 centimeter dimension vertical, the 61 centimeter dimension parallel to the opening, and the lower surface in contact with the floor of the bus at all times; and

(2) In the case of a side emergency exit door, an opening at least 114 centimeters high and 61 centimeters wide.

(i) Except as provided in paragraph (a)(2)(ii) of this section, no portion of a seat or a restraining barrier shall be installed within the area bounded by the opening of a side emergency exit door, a vertical transverse plane tangent to the rearward edge of the door opening frame, a vertical transverse plane parallel to that plane at a distance of 30 centimeters forward of that plane, and a longitudinal vertical plane passing through the longitudinal centerline of the bus. (See Figure 5A).

(ii) A seat bottom may be located within the area described in paragraph (a)(2)(i) of this section if the seat bottom pivots and automatically assumes and retains a vertical position when not in use, so that no portion of the seat bottom is within the area described in paragraph (i) when the seat bottom is vertical. (See Figure 5B).

(iii) No portion of a seat or restraining barrier located forward of the area described in paragraph (a)(2)(i) of this section and between the door opening and a longitudinal vertical plane passing through the longitudinal centerline of the bus shall extend rearward of a vertical transverse plane tangent to the forwardmost portion of a latch mechanism on the door. (See Figures 5B and 5C.)

(3)(i) Each emergency exit door of a school bus shall be equipped with a positive door opening device that, after the release mechanism has been operated, under the conditions of S6, before and after the window retention test required by S5.1—

(A) Bears the weight of the door;

(B) Keeps the door from closing past the point at which the door is perpendicular to the side of the bus body, regardless of the body's orientation; and

(C) Provides a means for release or override.

(ii) The positive door opening device shall perform the functions specified in paragraph (a)(3)(i) (A) and (B) of this section without the need for additional action beyond opening the door past the point at which the door is perpendicular to the side of the bus body.

(b) *Emergency roof exits.* After the release mechanism has been operated, each emergency roof exit of a school bus shall, under the conditions of S6, before and after the window retention test required by S5.1, using the force levels specified in S5.3.3, be manually extendable by a single person to a position that permits an opening at least 41 centimeters high and 41 centimeters wide.

(c) *Emergency exit windows.* After the release mechanism has been operated, each emergency exit window of a school bus shall, under the conditions of S6., both before and after the window retention test of S5.1, using force levels specified in S5.3.3.2, be manually extendable by a single occupant to a position that provides an opening large enough to admit unobstructed passage,

keeping a major axis horizontal at all times, of an ellipsoid generated by rotating about its minor axis an ellipse having a major axis of 50 centimeters and a minor axis of 33 centimeters.

S5.4.2.2 *School buses with a GVWR of 10,000 pounds or less.* A school bus with a GVWR of 10,000 pounds or less shall conform to all the provisions of S5.4.2, except that the parallelepiped dimension for the opening of the rear emergency door or doors shall be 45 inches high, 22 inches wide, and six inches deep.

S5.5 *Emergency exit identification.*

S5.5.1 In buses other than school buses, and except for windows serving as emergency exits in accordance with S5.2.2.3(b) and doors in buses with a GVWR of 10,000 pounds or less, each emergency exit door shall have the designation ''Emergency Door'' or ''Emergency Exit,'' and every other emergency exit shall have the designation ''Emergency Exit'' followed by concise operating instructions describing each motion necessary to unlatch and open the exit, located within 16 centimeters of the release mechanism.

EXAMPLES:

(1) Lift to Unlatch, Push to Open

(2) Lift Handle and Push out to Open

When a release mechanism is not located within an occupant space of an adjacent seat, a label meeting the requirements of S5.5.2 that indicates the location of the nearest release mechanism shall be placed within the occupant space.

Example: ''Emergency Exit Instructions Located Next to Seat Ahead''

S5.5.2 *In buses other than school buses.* Except as provided in S5.5.2.1, each marking shall be legible, when the only source of light is the normal nighttime illumination of the bus interior, to occupants having corrected visual acuity of 20/40 (Snellen ratio) seated in the adjacent seat, seated in the seat directly adjoining the adjacent seat, and standing in the aisle location that is closest to that adjacent seat. The marking shall be legible from each of these locations when the other two corresponding locations are occupied.

S5.5.2.1 If the exit has no adjacent seat, the marking must meet the legibility requirements of S5.5.2 for occupants standing in the aisle location nearest to the emergency exit, except for a roof exit, which must meet the legibility requirements for occupants positioned with their backs against the floor opposite the roof exit.

S5.5.3 *School Bus.*

(a) Each school bus emergency exit provided in accordance with S5.2.3.1 shall have the designation ''Emergency Door'' or ''Emergency Exit,'' as appropriate, in letters at least 5 centimeters high, of a color that contrasts with its background. For emergency exit doors, the designation shall be located at the top of, or directly above, the emergency exit door on both the inside and outside surfaces of the bus. The designation for roof exits shall be located on an inside surface of the exit, or within 30 centimeters of the roof exit opening. For emergency window exits, the designation shall be located at the top of, or directly above, or at the bottom of the emergency window exit on both the inside and outside surfaces of the bus.

(b) Concise operating instructions describing the motions necessary to unlatch and open the emergency exit shall be located within 15 centimeters of the release mechanism on the inside surface of the bus. These instructions shall be in letters at least 1 centimeter high and of a color that contrasts with its background.

EXAMPLES:

(1) Lift to Unlatch, Push to Open

(2) Turn Handle, Push Out to Open

(c) Each opening for a required emergency exit shall be outlined around its outside perimeter with a retroreflective tape with a minimum width of 2.5 centimeters and either red, white, or yellow in color, that when tested under the conditions specified in S6.1 of Standard No. 131 (49 CFR 571.131), meets the criteria specified in Table 1 of that section.

S6. *Test conditions.*

S6.1 The vehicle is on a flat, horizontal surface.

S6.2 The inside of the vehicle and the outside environment are kept at any temperature from 70° to 85 °Fahrenheit for 4 hours immediately

preceding the tests, and during the tests.

S6.3 For the window retention test, windows are installed, closed, and latched (where latches are provided) in the condition intended for normal bus operation.

S6.4 For the emergency exit release and extension tests, windows are installed as in S6.3, seats, armrests, and interior objects near the windows are installed as for normal use, and seats are in the upright position.

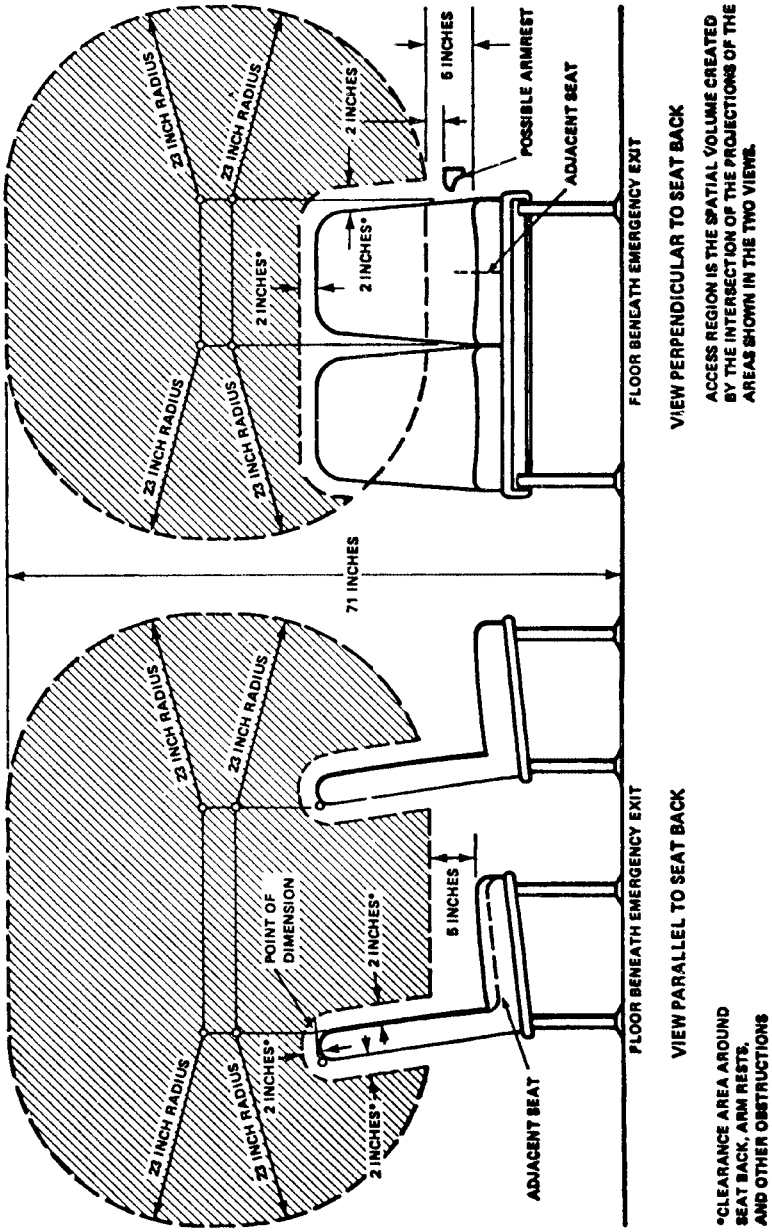

FIGURE 1 LOW-FORCE ACCESS REGION FOR EMERGENCY EXITS HAVING ADJACENT SEATS

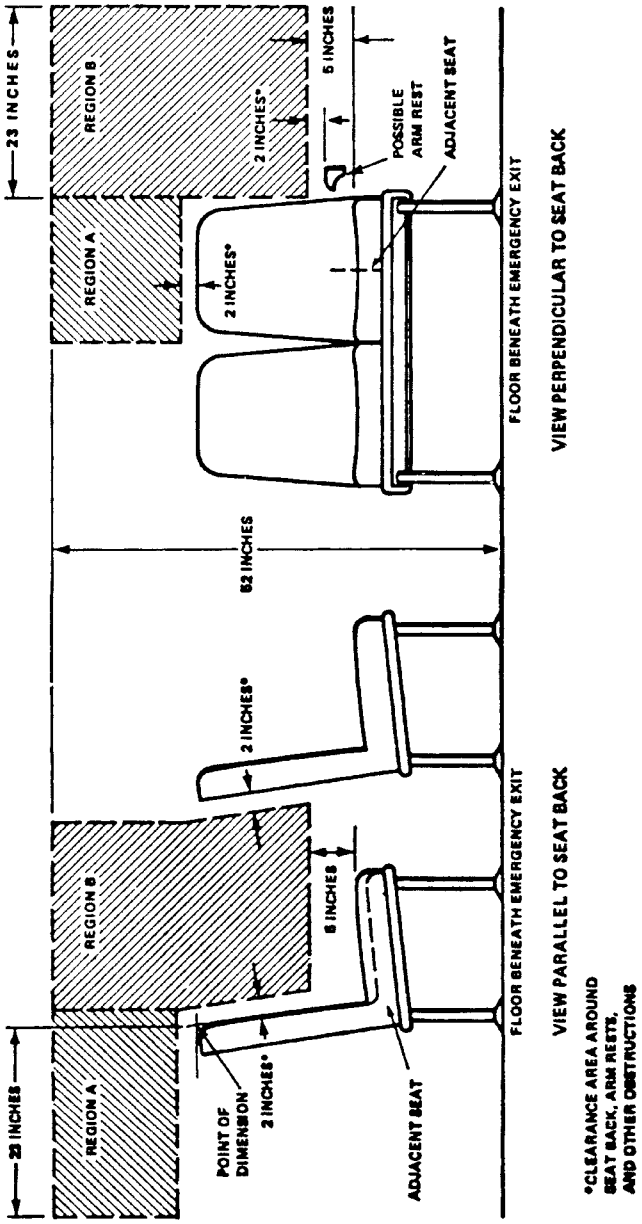

FIGURE 2 HIGH-FORCE ACCESS REGIONS FOR EMERGENCY EXITS HAVING ADJACENT SEATS

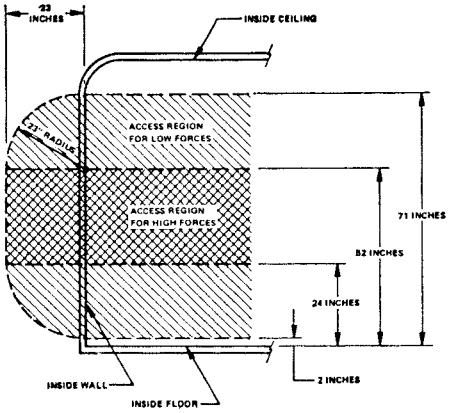

3A. SIDE EMERGENCY EXIT

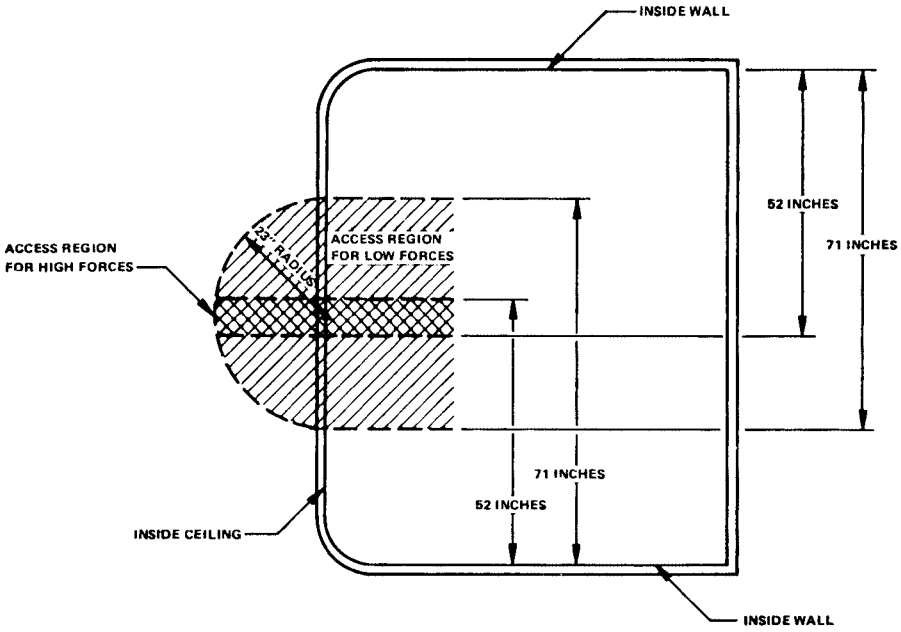

3B. ROOF EMERGENCY EXIT

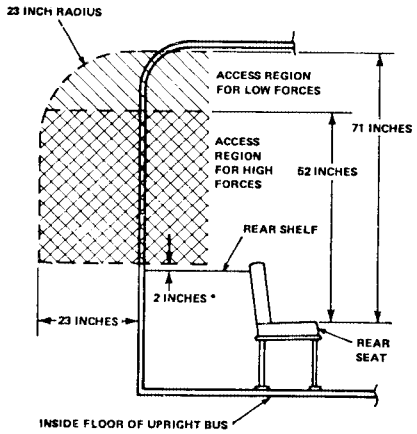

*TYPICAL CLEARANCE AROUND OBSTRUCTIONS

3C. REAR EMERGENCY EXIT WITH REAR OBSTRUCTION

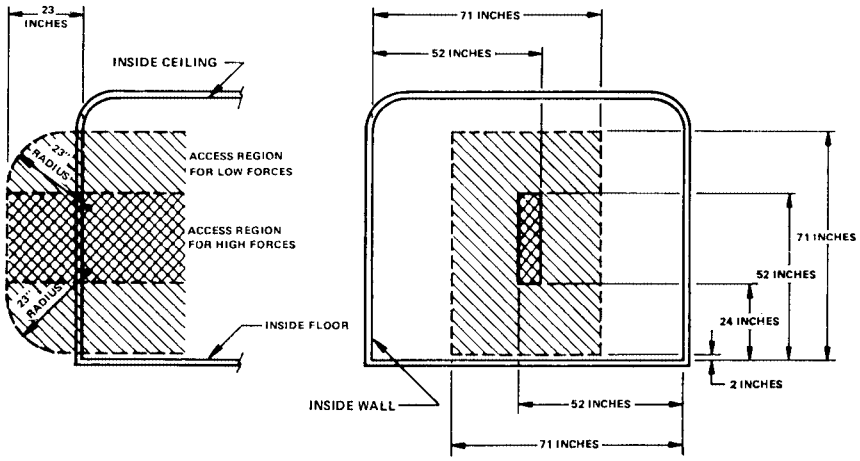

3D. REAR EMERGENCY EXIT WITHOUT REAR OBSTRUCTION

FIGURE 3 LOW AND HIGH-FORCE ACCESS REGIONS FOR EMERGENCY EXITS WITHOUT ADJACENT SEATS

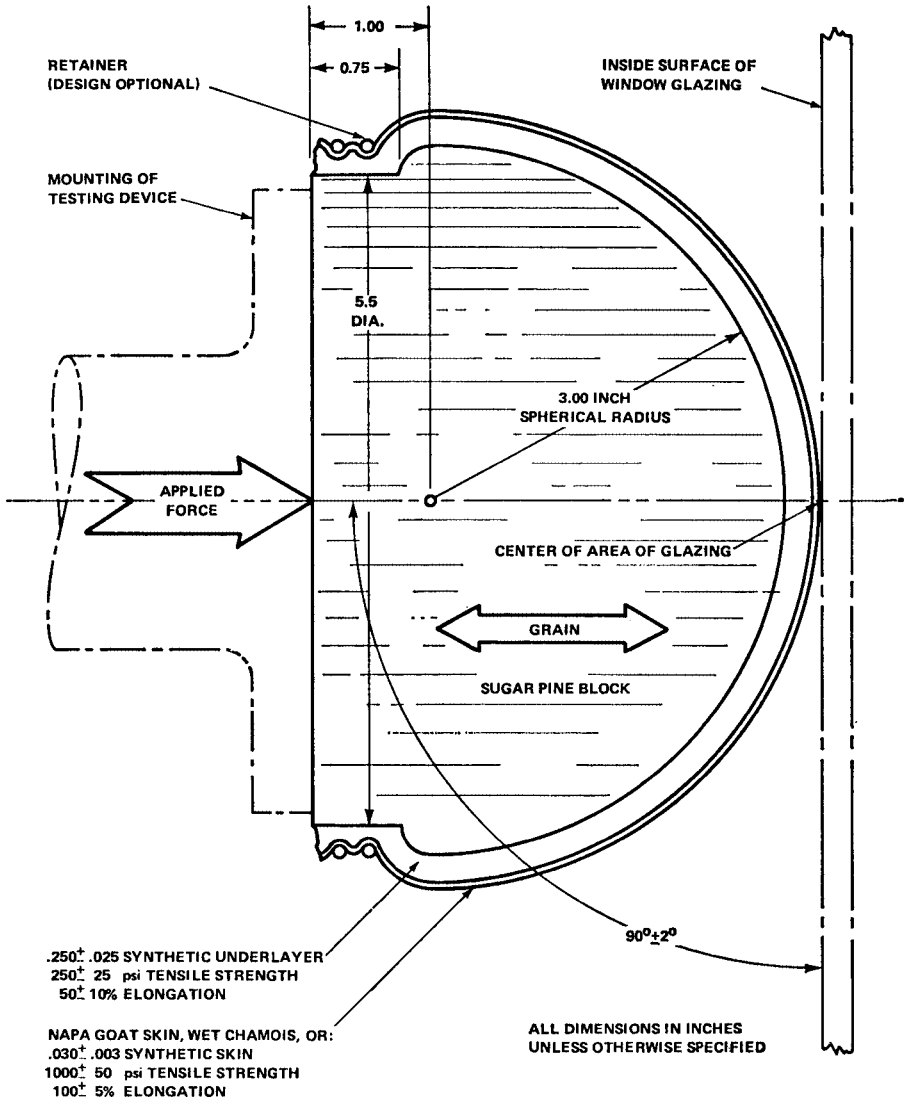

FIGURE 4 HEAD FORM

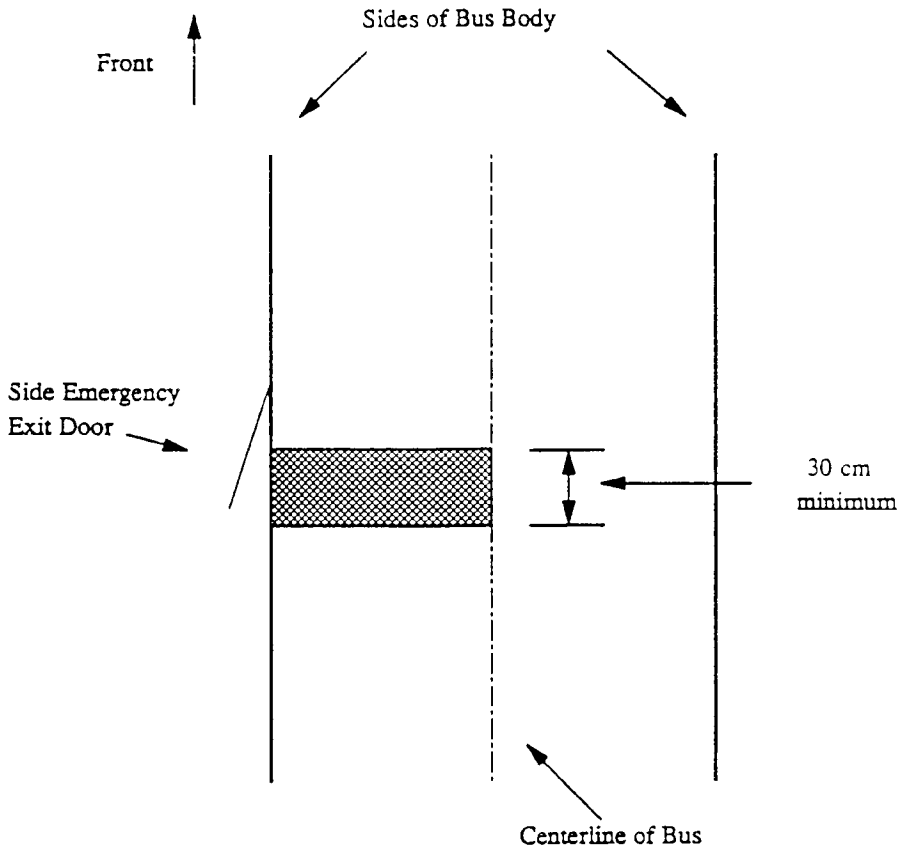

Figure 5A. Minimum Side Emergency Exit Clearance Specifications (Plan View)

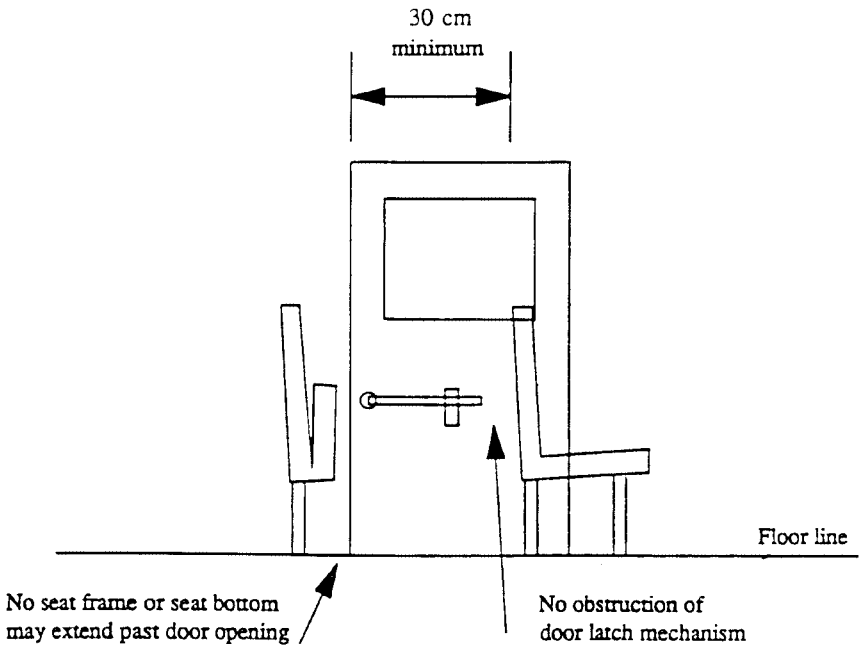

Figure 5B. Minimum Side Emergency Exit Flip-Up Seat Clearance Specifications

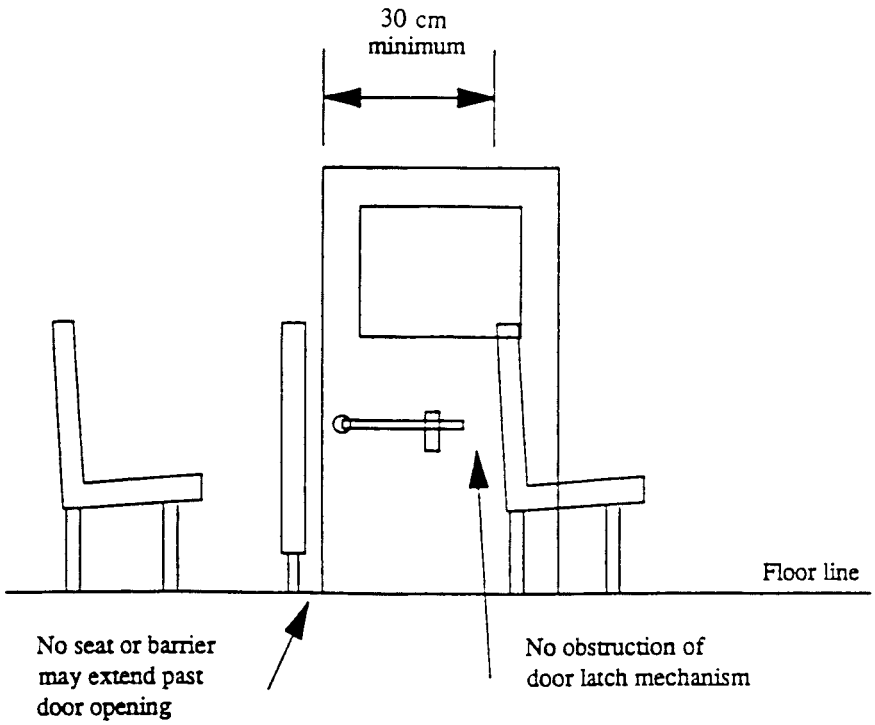

Figure 5C. Minimum Side Emergency Exit Clearance Specifications

Table 1. Minimum Specific Intensity Per Unit Area (SIA)

(Candelas per Footcandle Per Square Foot)

Type III Retroreflective Material

A - Glass Bead Retroreflective Element Material

Observation Angle (°)	Entrance Angle (°)	White	Red	Yellow
0.2	-4	250	45	170
0.2	+30	150	25	100
0.5	-4	95	15	62
0.5	+30	65	10	45

B - Prismatic Retroreflectve Element Material

Observation Angle (°)	Entrance Angle (°)	White	Red	Yellow
0.2	-4	250	45	170
0.2	+30	95	13.3	64
0.5	-4	200	28	136
0.5	+30	65	10	45

[37 FR 9395, May 10, 1972, as amended at 37 FR 18035, Sept. 6, 1972; 38 FR 6070, Mar. 6, 1973; 38 FR 7562, Mar. 28, 1973; 39 FR 15274, May 2, 1974; 40 FR 48512, Oct. 16, 1975; 41 FR 3872, Jan. 27, 1976; 41 FR 22357, June 3, 1976; 41 FR 24592, June 17, 1976; 41 FR 36027, Aug. 26, 1976; 47 FR 7256, Feb. 18, 1982; 47 FR 37555, Aug. 26, 1982; 57 FR 49423, Nov. 2, 1992; 57 FR 57020, Dec. 2, 1992; 59 FR 22999, May 4, 1994; 60 FR 24570, May 9, 1995]

EFFECTIVE DATE NOTE: At 67 FR 19351, Apr. 19, 2002, §571.217 was amended by adding in S4, in alphabetical order, the definitions of "wheelchair," "wheelchair securement anchorage", and "wheelchair securement device", by revising S5.4.2.1(a)(1) by adding S5.4.3 and S5.5.3(d) and by adding after Figure 5C, Figure 6A, Figure 6B, Figure 6C, and Figure 6D, effective Apr. 21, 2003. For the convenience of the user, the revised and added text is set forth as follows:

§571.217 Standard No. 217; Bus emergency exits and window retention and release.

* * * * *

S4. * * *

Wheelchair means a wheeled seat frame for the support and conveyance of a physically disabled person, comprising at least a frame, seat, and wheels.

Wheelchair securement anchorage means the provision for transferring wheelchair securement device loads to the vehicle structure.

Wheelchair securement device means a strap, webbing or other device used for securing a wheelchair to the school bus, including all necessary buckles and other fasteners.

* * * * *

S5.4.2.1 * * *

(a) * * *

(1) In the case of a rear emergency exit door, an opening large enough to permit unobstructed passage into the bus of a rectangular parallelepiped 1,145 millimeters (45 inches) high, 610 millimeters (24 inches) wide, and 305 millimeters (12 inches) deep, keeping the 1,145 millimeter (45 inch) dimension vertical, the 610 (24 inch) millimeter dimension parallel to the opening, and the lower surface in contact with the floor of the bus at all times, until the bottom edge of the rearmost surface of the parallelepiped is tangent to the plane of the door opening; and

* * * * *

S5.4.3 Restriction on wheelchair anchorage location.

S5.4.3.1 Except as provided in paragraph S5.4.3.2 of this section, no portion of a wheelchair securement anchorage shall be located in a school bus such that:

(a) In the case of side emergency exit doors, any portion of the wheelchair securement anchorage is within the space bounded by the interior side wall and emergency exit door opening, transverse vertical planes 305 mm (12 inches) forward and rearward of the center of any side emergency exit door restricted area, and a longitudinal vertical plane through the longitudinal centerline of the school bus, as shown in Figure 6A and Figure 6B.

(b) In the case of rear emergency exit doors in school buses with a gross vehicle weight rating greater than 4,536 kg (10,000 lb), any portion of the wheelchair securement anchorage is within the space bounded by longitudinal vertical planes tangent to the left and right sides of the door opening, a transverse vertical plane 305 mm (12 inches) forward of the bottom edge of the door opening, and a horizontal plane 1,145 mm (45 inches) above the floor of the bus, as shown in Figure 6C and Figure 6D.

(c) In the case of rear emergency exit doors in school buses with a gross vehicle weight rating of 4,536 kg (10,000 lb) or less, any portion of the wheelchair securement anchorage is within the space bounded by longitudinal vertical planes tangent to the left and right sides of the door opening, a transverse vertical plane 150 mm (6 inches) forward of the bottom edge of the door opening, and a horizontal plane 1,145 mm (45 inches) above the floor of the bus, as shown in Figure 6C and Figure 6D.

S5.4.3.2 The restriction in S5.4.3.1(a) of this section does not apply to tracks or track-type devices that are used for mounting seats and/or for wheelchair securement devices.

* * * * *

S5.5.3 *School Bus.*

* * * * *

(d) On the inside surface of each school bus, there shall be a label directly beneath or above each ''Emergency Door'' or ''Emergency Exit'' designation required by paragraph (a) of S5.5.3 of this standard for an emergency exit door or window. The label shall state, in letters at least 25 mm (one inch) high, the words ''DO NOT BLOCK'' in a color that contrasts with the background of the label.

* * * * *

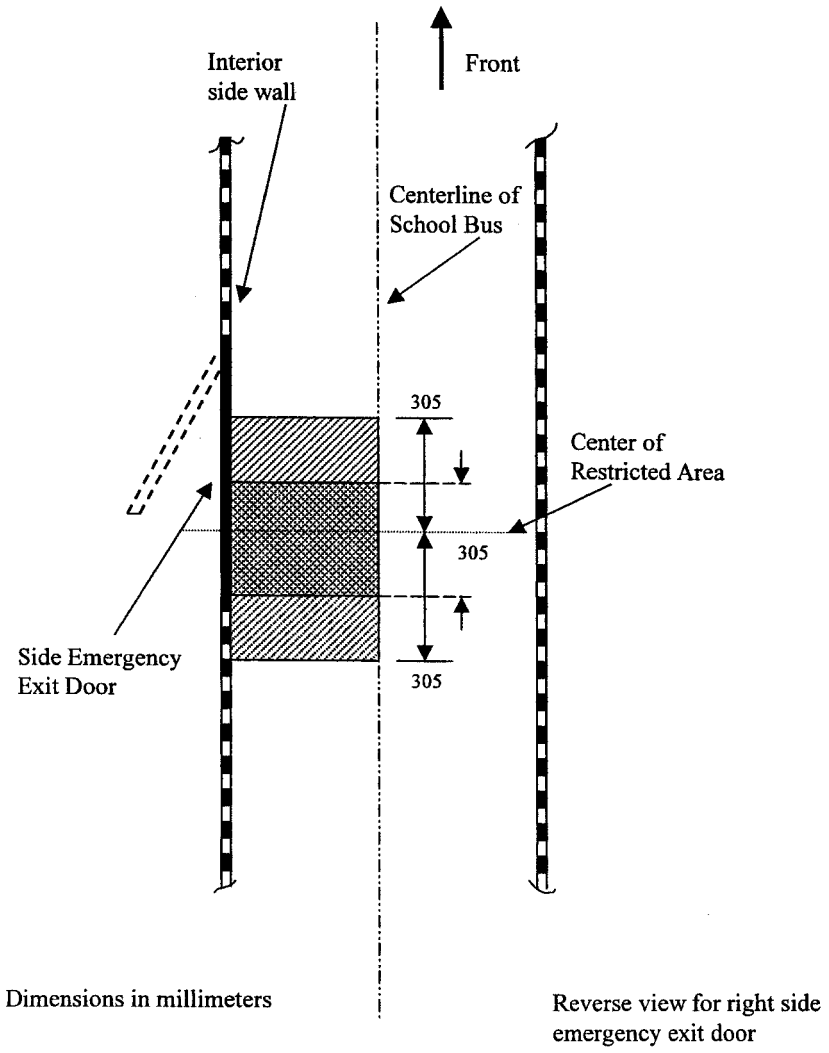

Figure 6A. Side Emergency Exit – No Wheelchair Anchorages within the shaded region

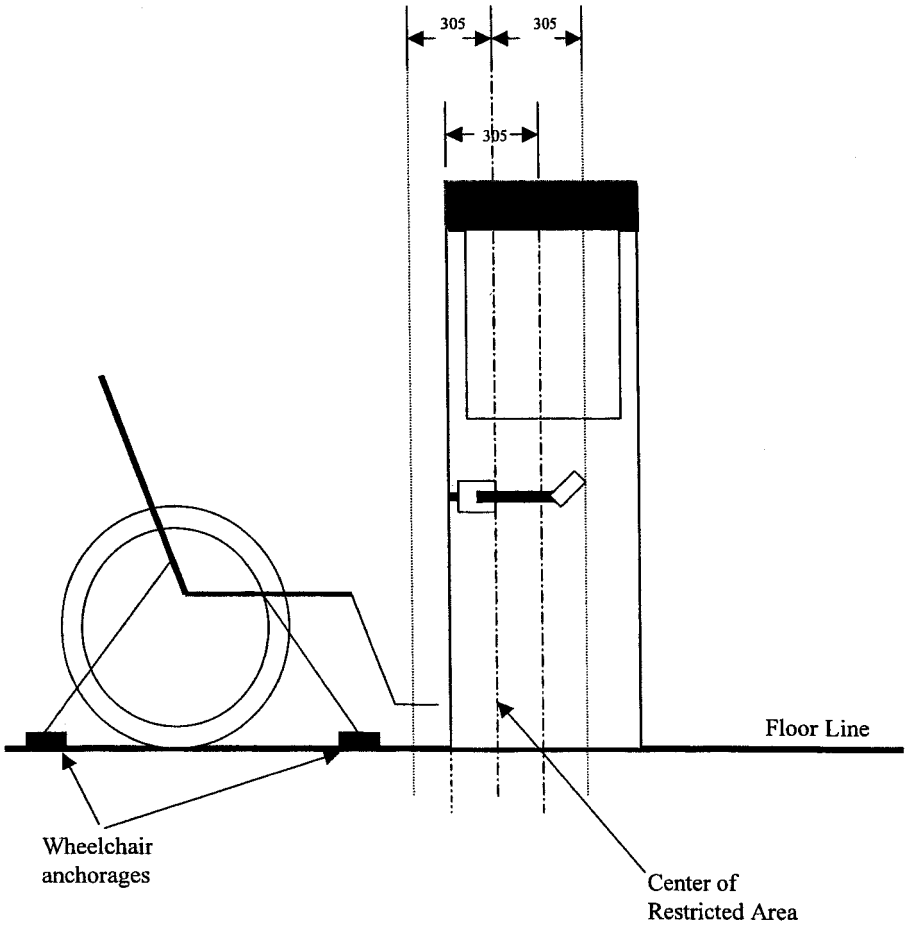

Figure 6B. Side Emergency Exit – No Wheelchair Anchorages within the indicated region

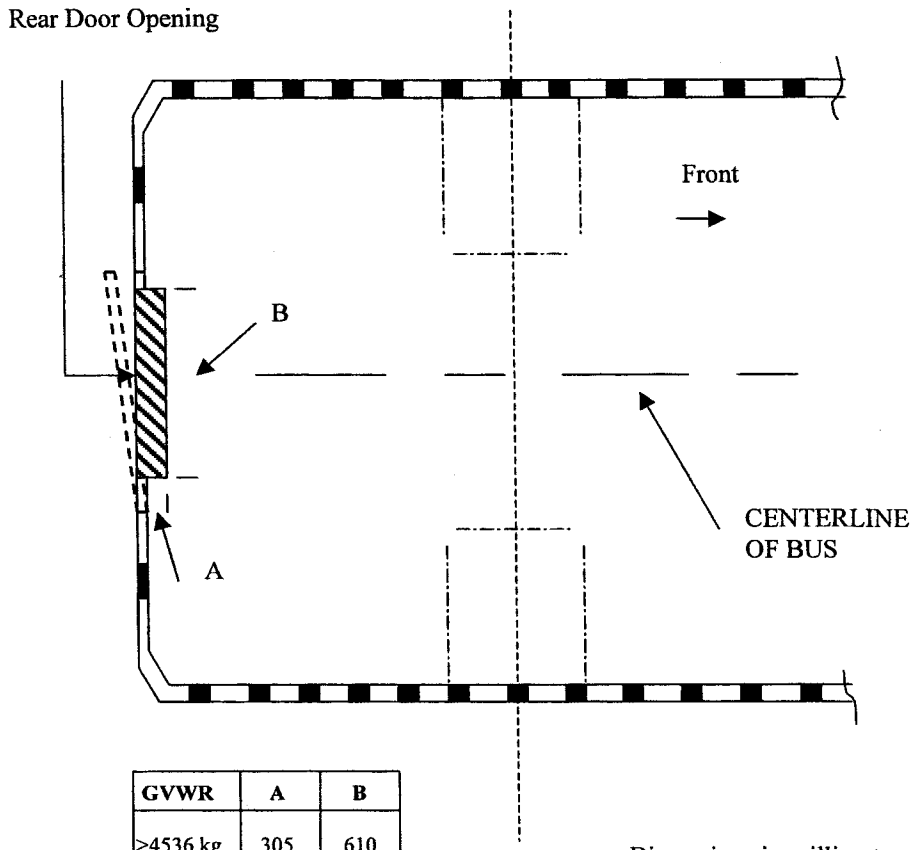

GVWR	A	B
>4536 kg	305	610
<=4536 kg	152	558

Dimensions in millimeters

Figure 6C. Rear Door Emergency Exit - No Wheelchair Anchorages within the shaded region

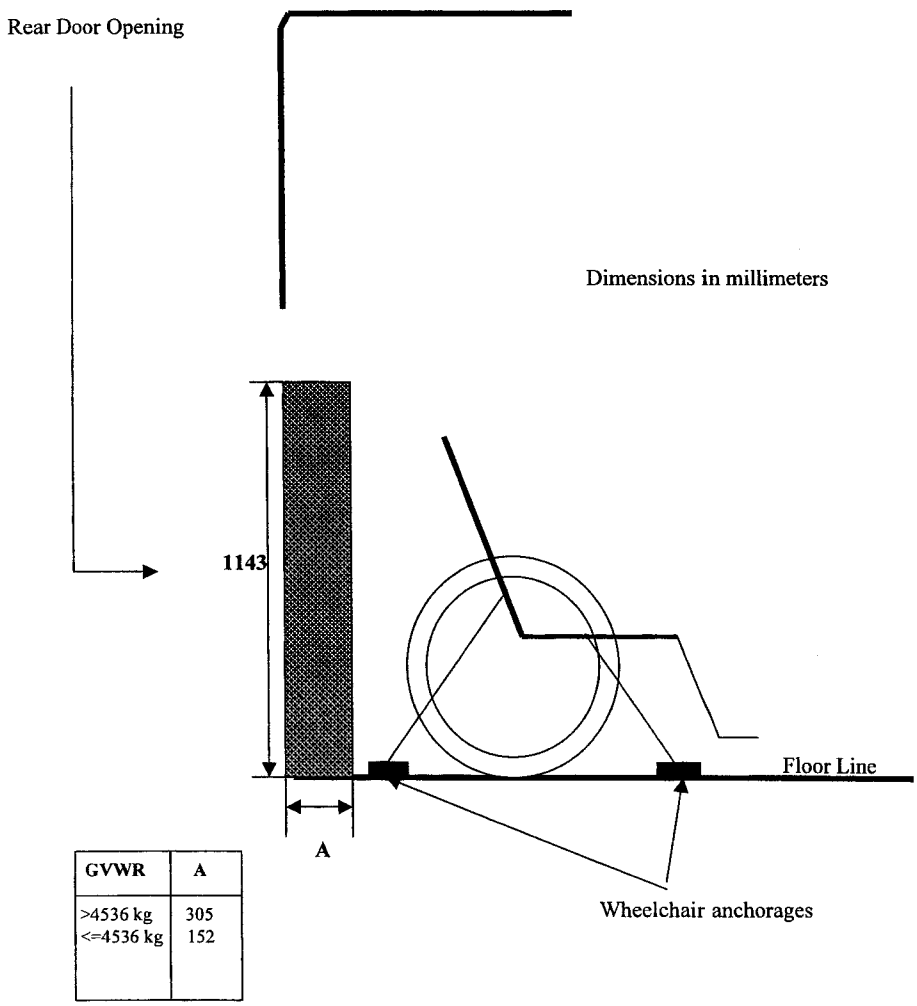

Figure 6 D. Rear Door Emergency Exit - No Wheelchair Anchorages within the shaded region

§ 571.218 Standard No. 218; Motorcycle helmets.

S1. *Scope.* This standard establishes minimum performance requirements for helmets designed for use by motorcyclists and other motor vehicle users.

S2. *Purpose.* The purpose of this standard is to reduce deaths and injuries to motorcyclists and other motor vehicle users resulting from head impacts.

S3. *Application.* This standard applies to all helmets designed for use by motorcyclists and other motor vehicle users.

S4. *Definitions.*

Basic plane means a plane through the centers of the right and left external ear openings and the lower edge of

the eye sockets (Figure 1) of a reference headform (Figure 2) or test headform.

Helmet positioning index means the distance in inches, as specified by the manufacturer, from the lowest point of the brow opening at the lateral midpoint of the helmet to the basic plane of a reference headform, when the helmet is firmly and properly positioned on the reference headform.

Midsagittal plane means a longitudinal plane through the apex of a reference headform or test headform that is perpendicular to the basic plane (Figure 3).

Reference headform means a measuring device contoured to the dimensions of one of the three headforms described in Table 2 and Figures 5 through 8 with surface markings indicating the locations of the basic, midsagittal, and reference planes, and the centers of the external ear openings.

Reference plane means a plane above and parallel to the basic plane on a reference headform or test headform (Figure 2) at the distance indicated in Table 2.

Retention system means the complete assembly by which the helmet is retained in position on the head during use.

Test headform means a test device contoured to the dimensions of one of the three headforms described in Table 2 and Figures 5 through 8 with surface markings indicating the locations of the basic, mid-sagittal, and reference planes.

S5. *Requirements.* Each helmet shall meet the requirements of S5.1, S5.2, and S5.3 when subjected to any conditioning procedure specified in S6.4, and tested in accordance with S7.1, S7.2, and S7.3.

S5.1 *Impact attenuation.* When an impact attenuation test is conducted in accordance with S7.1, all of the following requirements shall be met:

(a) Peak accelerations shall not exceed 400g;

(b) Accelerations in excess of 200g shall not exceed a cumulative duration of 2.0 milliseconds; and

(c) Accelerations in excess of 150g shall not exceed a cumulative duration of 4.0 milliseconds.

S5.2 *Penetration.* When a penetration test is conducted in accordance with S7.2, the striker shall not contact the surface of the test headform.

S5.3 *Retention system.*

S5.3.1 When tested in accordance with S7.3:

(a) The retention system or its components shall attain the loads specified without separation; and

(b) The adjustable portion of the retention system test device shall not move more than 1 inch (2.5 cm) measured between preliminary and test load positions.

S5.3.2 Where the retention system consists of components which can be independently fastened without securing the complete assembly, each such component shall independently meet the requirements of S5.3.1.

S5.4 *Configuration.* Each helmet shall have a protective surface of continuous contour at all points on or above the test line described in S6.2.3. The helmet shall provide peripheral vision clearance of at least 105° to each side of the mid-sagittal plane, when the helmet is adjusted as specified in S6.3. The vertex of these angles, shown in Figure 3, shall be at the point on the anterior surface of the reference headform at the intersection of the mid-sagittal and basic planes. The brow opening of the helmet shall be at least 1 inch (2.5 cm) above all points in the basic plane that are within the angles of peripheral vision (see Figure 3).

S5.5 *Projections.* A helmet shall not have any rigid projections inside its shell. Rigid projections outside any helmet's shell shall be limited to those required for operation of essential accessories, and shall not protrude more than 0.20 inch (5 mm).

S5.6 *Labeling.*

S5.6.1 Each helmet shall be labeled permanently and legibly, in a manner such that the label(s) can be read easily without removing padding or any other permanent part, with the following:

(a) Manufacturer's name or identification.

(b) Precise model designation.

(c) Size.

(d) Month and year of manufacture. This may be spelled out (for example,

June 1988), or expressed in numerals (for example, 6/88).

(e) The symbol DOT, constituting the manufacturer's certification that the helmet conforms to the applicable Federal motor vehicle safety standards. This symbol shall appear on the outer surface, in a color that contrasts with the background, in letters at least ⅜ inch (1 cm) high, centered laterally with the horizontal centerline of the symbol located a minimum of 1⅛ inches (2.9 cm) and a maximum of 1⅜ inches (3.5 cm) from the bottom edge of the posterior portion of the helmet.

(f) Instructions to the purchaser as follows:

(1) ''Shell and liner constructed of (identify type(s) of materials).

(2) ''Helmet can be seriously damaged by some common substances without damage being visible to the user. Apply only the following: (Recommended cleaning agents, paints, adhesives, etc., as appropriate).

(3) ''Make no modifications. Fasten helmet securely. If helmet experiences a severe blow, return it to the manufacturer for inspection, or destroy it and replace it.''

(4) Any additional relevant safety information should be applied at the time of purchase by means of an attached tag, brochure, or other suitable means.

S5.7 *Helmet positioning index*. Each manufacturer of helmets shall establish a positioning index for each helmet he manufactures. This index shall be furnished immediately to any person who requests the information, with respect to a helmet identified by manufacturer, model designation, and size.

S6. *Preliminary test procedures*. Before subjecting a helmet to the testing sequence specified in S7., prepare it according to the procedures in S6.1, S6.2, and S6.3.

S6.1 *Selection of appropriate headform*.

S6.1.1 A helmet with a manufacturer's designated discrete size or size range which does not exceed 6¾ (European size: 54) is tested on the small headform. A helmet with a manufacturer's designated discrete size or size range which exceeds 6¾, but does not exceed 7½ (European size: 60) is tested on the medium headform. A helmet with a manufacturer's designated discrete size or size range which exceeds 7½ is tested on the large headform.

S6.1.2 A helmet with a manufacturer's designated size range which includes sizes falling into two or all three size ranges described in S6.1.1 is tested on each headform specified for each size range.

S6.2 *Reference marking*.

S6.2.1 Use a reference headform that is firmly seated with the basic and reference planes horizontal. Place the complete helmet to be tested on the appropriate reference headform, as specified in S6.1.1 and S6.1.2.

S6.2.2 Apply a 10-pound (4.5 kg) static vertical load through the helmet's apex. Center the helmet laterally and seat it firmly on the reference headform according to its helmet positioning index.

S6.2.3 Maintaining the load and position described in S6.2.2, draw a line (hereinafter referred to as ''test line'') on the outer surface of the helmet coinciding with portions of the intersection of that service with the following planes, as shown in Figure 2:

(a) A plane 1 inch (2.5 cm) above and parallel to the reference plane in the anterior portion of the reference headform;

(b) A vertical transverse plane 2.5 inches (6.4 cm) behind the point on the anterior surface of the reference headform at the intersection of the mid-sagittal and reference planes;

(c) The reference plane of the reference headform;

(d) A vertical transverse plane 2.5 inches (6.4. cm) behind the center of the external ear opening in a side view; and

(e) A plane 1 inch (2.5 cm) below and parallel to the reference plane in the posterior portion of the reference headform.

S6.3 *Helmet positioning*.

S6.3.1 Before each test, fix the helmet on a test headform in the position that conforms to its helmet positioning index. Secure the helmet so that it does not shift position before impact or before application of force during testing.

S6.3.2 In testing as specified in S7.1 and S7.2, place the retention system in

a position such that it does not interfere with free fall, impact or penetration.

S6.4 *Conditioning.*

S6.4.1 Immediately before conducting the testing sequence specified in S7, condition each test helmet in accordance with any one of the following procedures:

(a) *Ambient conditions.* Expose to a temperature of 70 °F(21 °C) and a relative humidity of 50 percent for 12 hours.

(b) *Low temperature.* Expose to a temperature of 14 °F(−10 °C) for 12 hours.

(c) *High temperature.* Expose to a temperature of 122 °F(50 °C) for 12 hours.

(d) *Water immersion.* Immerse in water at a temperature of 77 °F(25 °C) for 12 hours.

S6.4.2 If during testing, as specified in S7.1.3 and S7.2.3, a helmet is returned to the conditioning environment before the time out of that environment exceeds 4 minutes, the helmet is kept in the environment for a minimum of 3 minutes before resumption of testing with that helmet. If the time out of the environment exceeds 4 minutes, the helmet is returned to the environment for a minimum of 3 minutes for each minute or portion of a minute that the helmet remained out of the environment in excess of 4 minutes or for a maximum of 12 hours, whichever is less, before the resumption of testing with that helmet.

S7. *Test conditions.*

S7.1 *Impact attenuation test.*

S7.1.1 Impact attenuation is measured by determining acceleration imparted to an instrumented test headform on which a complete helmet is mounted as specified in S6.3, when it is dropped in guided free fall upon a fixed hemispherical anvil and a fixed flat steel anvil.

S7.1.2 Each helmet is impacted at four sites with two successive identical impacts at each site. Two of these sites are impacted upon a flat steel anvil and two upon a hemispherical steel anvil as specified in S7.1.10 and S7.1.11. The impact sites are at any point on the area above the test line described in paragraph S6.2.3, and separated by a distance not less than one-sixth of the maximum circumference of the helmet in the test area.

S7.1.3 Impact testing at each of the four sites, as specified in S7.1.2, shall start at two minutes, and be completed by four minutes, after removal of the helmet from the conditioning environment.

S7.1.4 (a) The guided free fall drop height for the helmet and test headform combination onto the hemispherical anvil shall be such that the minimum impact speed is 17.1 feet/second (5.2 m/sec). The minimum drop height is 54.5 inches (138.4 cm). The drop height is adjusted upward from the minimum to the extent necessary to compensate for friction losses.

(b) The guided free fall drop height for the helmet and test headform combination onto the flat anvil shall be such that the minimum impact speed is 19.7 ft./sec (6.0 m/sec). The minimum drop height is 72 inches (182.9 cm). The drop height is adjusted upward from the minimum to the extent necessary to compensate for friction losses.

S7.1.5 Test headforms for impact attenuation testing are constructed of magnesium alloy (K–1A), and exhibit no resonant frequencies below 2,000 Hz.

S7.1.6 The monorail drop test system is used for impact attenuation testing.

S7.1.7 The weight of the drop assembly, as specified in Table 1, is the combined weight of the test headform and the supporting assembly for the drop test. The weight of the supporting assembly is not less than 2.0 lbs. and not more than 2.4 lbs. (0.9 to 1.1 kg). The supporting assembly weight for the monorail system is the drop assembly weight minus the combined weight of the test headform, the headform's clamp down ring, and its tie down screws.

S7.1.8 The center of gravity of the test headform is located at the center of the mounting ball on the supporting assembly and lies within a cone with its axis vertical and forming a 10° included angle with the vertex at the point of impact. The center of gravity of the drop assembly lies within the rectangular volume bounded by x = −0.25 inch (−0.64 cm), x = 0.85 inch (2.16 cm), y = 0.25 inch (0.64 cm), and y = −0.25 inch (−0.64 cm) with the origin located at the center of gravity of the test headform. The rectangular volume has no boundary along the z-axis. The

x-y-z axes are mutually perpendicular and have positive or negative designations in accordance with the right-hand rule (See Figure 5). The origin of the coordinate axes also is located at the center of the mounting ball on the supporting assembly (See Figures 6, 7, and 8). The x-y-z axes of the test headform assembly on a monorail drop test equipment are oriented as follows: From the origin, the x-axis is horizontal with its positive direction going toward and passing through the vertical centerline of the monorail. The positive z-axis is downward. The y-axis also is horizontal and its direction can be decided by the z- and x-axes, using the right-hand rule.

S7.1.9 The acceleration transducer is mounted at the center of gravity of the test headform with the sensitive axis aligned to within 5° of vertical when the test headform assembly is in the impact position. The acceleration data channel complies with SAE Recommended Practice J211 JUN 80, Instrumentation for Impact Tests, requirements for channel class 1,000.

S7.1.10 The flat anvil is constructed of steel with a 5-inch (12.7 cm) minimum diameter impact face, and the hemispherical anvil is constructed of steel with a 1.9 inch (4.8 cm) radius impact face.

S7.1.11 The rigid mount for both of the anvils consists of a solid mass of at least 300 pounds (136.1 kg), the outer surface of which consists of a steel plate with minimum thickness of 1 inch (2.5 cm) and minimum surface area of 1 ft^2 (929 cm^2).

S7.1.12 The drop system restricts side movement during the impact attenuation test so that the sum of the areas bounded by the acceleration-time response curves for both the x- and y-axes (horizontal axes) is less than five percent of the area bounded by the acceleration-time response curve for the vertical axis.

S7.2 *Penetration test.*

S7.2.1 The penetration test is conducted by dropping the penetration test striker in guided free fall, with its axis aligned vertically, onto the outer surface of the complete helmet, when mounted as specified in S6.3, at any point above the test line, described in S6.2.3, except on a fastener or other rigid projection.

S7.2.2 Two penetration blows are applied at least 3 inches (7.6 cm) apart, and at least 3 inches (7.6 cm) from the centers of any impacts applied during the impact attenuation test.

S7.2.3 The application of the two penetration blows, specified in S7.2.2, starts at two minutes and is completed by four minutes, after removal of the helmet from the conditioning environment.

S7.2.4 The height of the guided free fall is 118.1 inches (3 m), as measured from the striker point to the impact point on the outer surface of the test helmet.

S7.2.5 The contactable surface of the penetration test headform is constructed of a metal or metallic alloy having a Brinell hardness number no greater than 55, which will permit ready detection should contact by the striker occur. The surface is refinished if necessary before each penetration test blow to permit detection of contact by the striker.

S7.2.6 The weight of the penetration striker is 6 pounds, 10 ounces (3 kg).

S7.2.7 The point of the striker has an included angle of 60°, a cone height of 1.5 inches (3.8 cm), a tip radius of 0.02 inch (standard 0.5 millimeter radius) and a minimum hardness of 60 Rockwell, C-scale.

S7.2.8 The rigid mount for the penetration test headform is as described in S7.1.11.

S7.3 *Retention system test.*

S7.3.1 The retention system test is conducted by applying a static tensile load to the retention assembly of a complete helmet, which is mounted, as described in S6.3, on a stationary test headform as shown in Figure 4, and by measuring the movement of the adjustable portion of the retention system test device under tension.

S7.3.2 The retention system test device consists of both an adjustable loading mechanism by which a static tensile load is applied to the helmet retention assembly and a means for holding the test headform and helmet stationary. The retention assembly is fastened around two freely moving rollers, both of which have a 0.5 inch (1.3 cm) diameter and a 3-inch (7.6 cm) center-

to-center separation, and which are mounted on the adjustable portion of the tensile loading device (Figure 4). The helmet is fixed on the test headform as necessary to ensure that it does not move during the application of the test loads to the retention assembly.

S7.3.3 A 50–pound (22.7 kg) preliminary test load is applied to the retention assembly, normal to the basic plane of the test headform and symmetrical with respect to the center of the retention assembly for 30 seconds, and the maximum distance from the extremity of the adjustable portion of the retention system test device to the apex of the helmet is measured.

S7.3.4 An additional 250–pound (113.4 kg) test load is applied to the retention assembly, in the same manner and at the same location as described in S7.3.3, for 120 seconds, and the maximum distance from the extremity of the adjustable portion of the retention system test device to the apex of the helmet is measured.

APPENDIX TO §571.218

TABLE 1—WEIGHTS FOR IMPACT ATTENUATION TEST DROP ASSEMBLY

Test headform size	Weight [1]—1b(kg)
Small	7.8 (3.5 kg).
Medium	11.0 (5.0 kg).
Large	13.4 (6.1 kg).

[1] Combined weight of instrumented test headform and supporting assembly for drop test.

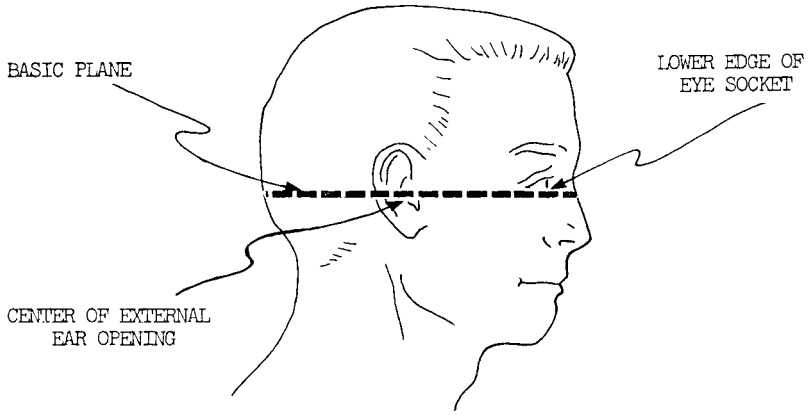

Figure 1

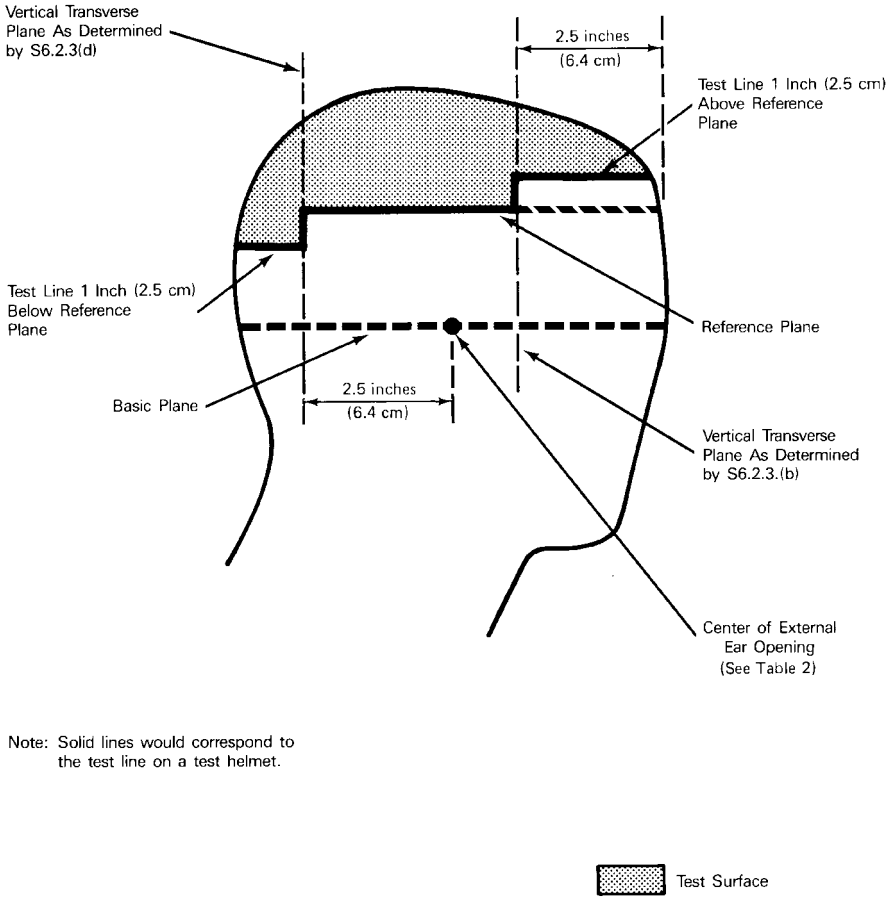

Note: Solid lines would correspond to the test line on a test helmet.

Figure 2

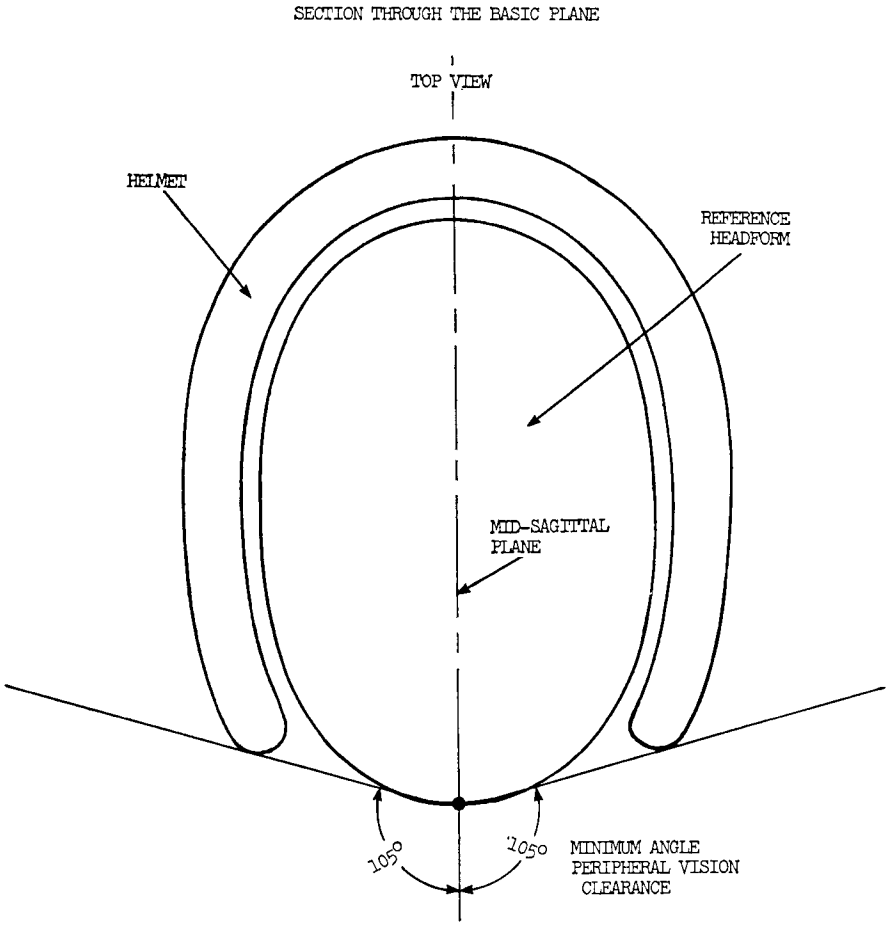
SECTION THROUGH THE BASIC PLANE
TOP VIEW
HELMET
REFERENCE HEADFORM
MID-SAGITTAL PLANE
105°
105°
MINIMUM ANGLE PERIPHERAL VISION CLEARANCE

Figure 3

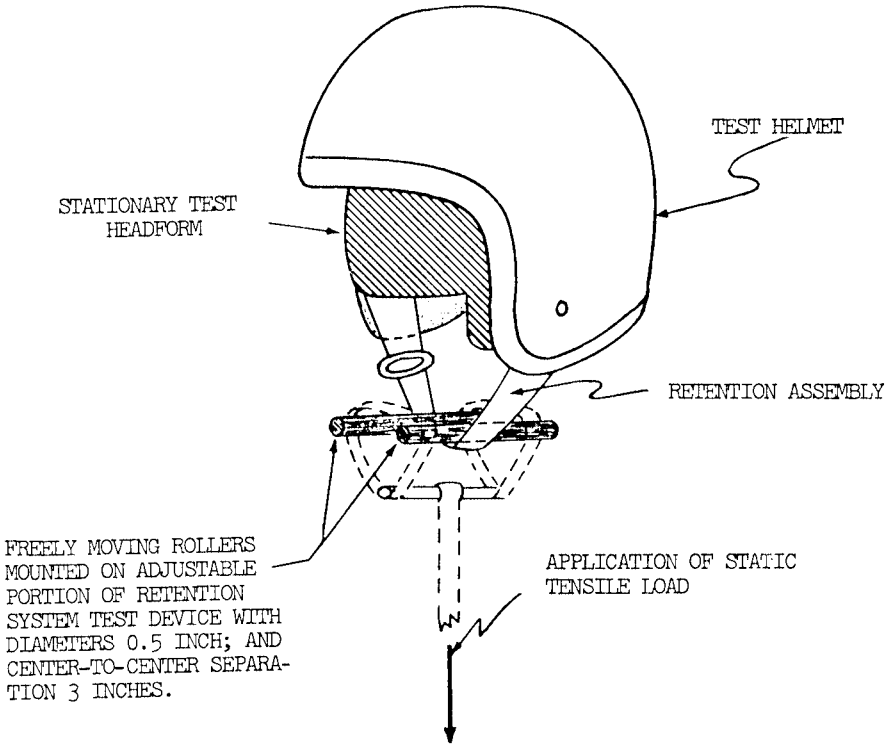

RETENTION SYSTEM TEST DEVICE

Figure 4

Figure 5

HEADFORM SECTIONS

Mid-Sagittal Plane (Symmetrical Plane)

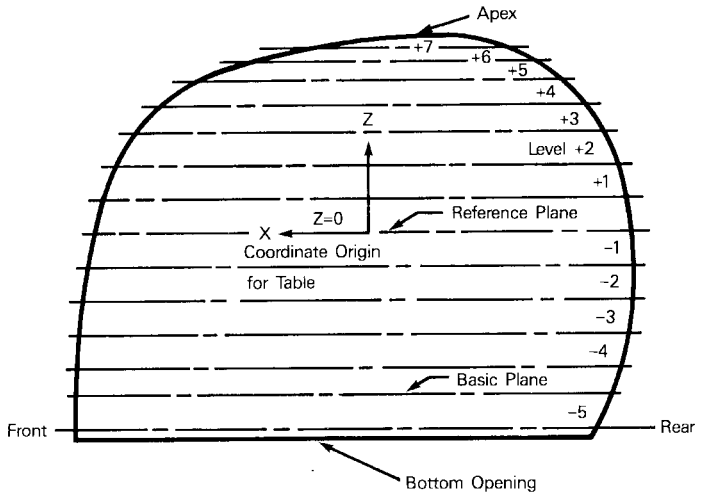

Headform Coordinate Systems
(Right-hand Rule)

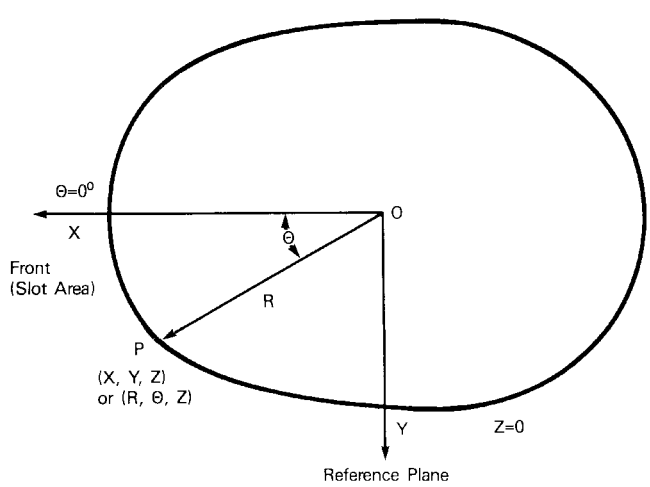

Table 2

Medium Headform—Exterior Dimensions

	Bottom Opening Z= −3.02			Level—5 Z= −2.900		
Θ	R	X	Y	R	X	Y
0	4.292	4.292	0	4.293	4.293	0
10	4.266	4.201	0.741	4.270	4.205	0.742
20	4.159	3.908	1.423	4.172	3.920	1.427
30	3.967	3.436	1.984	3.961	3.430	1.981
40	3.660	2.804	2.353	3.670	2.811	2.359
50	3.332	2.142	2.553	3.352	2.155	2.568
60	3.039	1.520	2.632	3.067	1.534	2.656
70	2.839	0.971	2.668	2.869	0.981	2.696
80	2.720	0.472	2.679	2.772	0.481	2.730
90	2.675	0	2.675	2.709	0	2.709
100	2.703	−0.469	2.662	2.724	−0.473	2.683
110	2.764	−0.945	2.597	2.794	−0.956	2.626
120	2.888	−1.444	2.501	2.917	−1.459	2.526
130	2.985	−1.919	2.287	3.040	−1.954	2.329
140	3.100	−2.375	1.993	3.175	−2.432	2.041
150	3.175	−2.750	1.588	3.232	−2.799	1.616
160	3.186	−2.994	1.090	3.246	−3.050	1.110
170	3.177	−3.129	0.552	3.237	−3.188	0.562
180	3.187	−3.187	0	3.246	−3.246	0

	Basic Plane Z= −2.360			Level—4 Z= −2.000		
Θ	R	X	Y	R	X	Y
0	4.272	4.272	0	4.247	4.247	0
10	4.248	4.184	0.738	4.223	4.159	0.733
20	4.147	3.897	1.418	4.120	3.872	1.409
30	3.961	3.430	1.981	3.940	3.412	1.970
40	3.687	2.824	2.370	3.683	2.821	2.367
50	3.384	2.175	2.592	3.392	2.180	2.598
60	3.111	1.556	2.694	3.132	1.566	2.712
70	2.927	1.001	2.751	2.960	1.012	2.782
80	2.815	0.489	2.772	2.860	0.497	2.817
90	2.779	0	2.779	2.838	0	2.838
100	2.802	−0.487	2.759	2.861	−0.497	2.818
110	2.887	−0.987	2.713	2.958	−1.012	2.780
120	3.019	−1.510	2.615	3.098	−1.549	2.683
130	3.180	−2.044	2.436	3.260	−2.096	2.497
140	3.306	−2.533	2.125	3.405	−2.608	2.189
150	3.398	−2.943	1.699	3.516	−3.045	1.758
160	3.458	−3.250	1.183	3.585	−3.369	1.226
170	3.475	−3.422	0.603	3.612	−3.557	0.627
180	3.472	−3.472	0	3.609	−3.609	0

Table 2

Medium Headform—Exterior Dimensions (Continued)

	Level—3 Z= −1.500			Level—2 Z= −1.000		
Θ	R	X	Y	R	X	Y
0	4.208	4.208	0	4.148	4.148	0
10	4.179	4.116	0.726	4.112	4.050	0.714
20	4.075	3.829	1.394	4.013	3.771	1.373
30	3.902	3.379	1.951	3.844	3.329	1.922
40	3.654	2.799	2.349	3.609	2.765	2.320
50	3.377	2.171	2.587	3.352	2.155	2.568
60	3.094	1.547	2.680	3.137	1.569	2.717
70	2.982	1.020	2.802	2.989	1.022	2.809
80	2.891	0.502	2.847	2.902	0.504	2.858
90	2.876	0	2.876	2.884	0	2.884
100	2.918	−0.507	2.874	2.943	−0.511	2.898
110	3.021	−1.033	2.839	3.052	−1.044	2.868
120	3.170	−1.585	2.745	3.225	−1.613	2.793
130	3.337	−2.145	2.556	3.397	−2.184	2.602
140	3.483	−2.668	2.239	3.536	−2.709	2.273
150	3.604	−3.121	1.802	3.657	−3.167	1.829
160	3.682	−3.460	1.259	3.751	−3.525	1.283
170	3.725	−3.668	0.647	3.807	−3.749	0.661
180	3.741	−3.741	0	3.822	−3.822	0

	Level—1 Z= −0.500			Reference Plane Z=0.0		
Θ	R	X	Y	R	X	Y
0	4.067	4.067	0	3.971	3.971	0
10	4.033	3.972	0.700	3.935	3.875	0.683
20	3.944	3.706	1.349	3.853	3.621	1.318
30	3.777	3.271	1.889	3.701	3.205	1.851
40	3.552	2.721	2.283	3.491	2.674	2.244
50	3.323	2.136	2.546	3.279	2.108	2.512
60	3.126	1.563	2.707	3.101	1.551	2.686
70	2.987	1.022	2.807	2.979	1.019	2.799
80	2.912	0.506	2.868	2.910	0.505	2.866
90	2.893	0	2.893	2.890	0	2.890
100	2.895	−0.503	2.851	2.945	−0.511	2.900
110	3.064	−1.048	2.879	3.062	−1.047	2.877
120	3.231	−1.616	2.798	3.228	−1.614	2.796
130	3.411	−2.193	2.613	3.413	−2.194	2.615
140	3.560	−2.727	2.288	3.563	−2.729	2.290
150	3.682	−3.189	1.841	3.681	−3.188	1.841
160	3.783	−3.555	1.294	3.773	−3.546	1.290
170	3.885	−3.826	0.675	3.832	−3.774	0.665
180	3.857	−3.857	0	3.844	−3.844	0

Table 2

Medium Headform—Exterior Dimensions (Continued)

	Level+1 Z=0.500			Level +2 Z=1.000		
Θ	R	X	Y	R	X	Y
0	3.830	3.830	0	3.665	3.665	0
10	3.801	3.743	0.660	3.613	3.558	0.627
20	3.725	3.500	1.274	3.554	3.340	1.216
30	3.587	3.106	1.794	3.436	2.976	1.718
40	3.399	2.604	2.185	3.271	2.506	2.103
50	3.205	2.060	2.455	3.102	1.994	2.376
60	3.044	1.522	2.636	2.959	1.480	2.563
70	2.927	1.001	2.751	2.854	0.976	2.682
80	2.861	0.497	2.818	2.792	0.485	2.750
90	2.855	0	2.855	2.783	0	2.783
100	2.897	−0.503	2.853	2.832	−0.492	2.789
110	3.007	−1.029	2.826	2.938	−1.005	2.761
120	3.176	−1.588	2.751	3.102	−1.551	2.686
130	3.372	−2.168	2.583	3.294	−2.117	2.523
140	3.520	−2.697	2.263	3.450	−2.643	2.218
150	3.643	−3.155	1.822	3.564	−3.087	1.782
160	3.728	−3.503	1.275	3.637	−3.418	1.244
170	3.777	−3.720	0.656	3.675	−3.619	0.638
180	3.782	−3.782	0	3.670	−3.670	0

	Level +3 Z=1.450			Level +4 Z=1.860		
Θ	R	X	Y	R	X	Y
0	3.419	3.419	0	3.061	3.061	0
10	3.382	3.331	0.587	3.035	2.989	0.527
20	3.299	3.100	1.128	2.966	2.787	1.014
30	3.197	2.769	1.599	2.872	2.487	1.436
40	3.052	2.338	1.962	2.754	2.110	1.770
50	2.911	1.871	2.230	2.642	1.698	2.024
60	2.786	1.393	2.413	2.522	1.261	2.184
70	2.700	0.924	2.537	2.477	0.847	2.328
80	2.647	0.460	2.607	2.442	0.424	2.405
90	2.636	0	2.636	2.442	0	2.442
100	2.691	−0.467	2.650	2.492	−0.433	2.454
110	2.796	−0.956	2.627	2.599	−0.889	2.442
120	2.961	−1.481	2.564	2.758	−1.379	2.389
130	3.147	−2.023	2.411	2.936	−1.887	2.249
140	3.301	−2.529	2.122	3.081	−2.360	1.980
150	3.408	−2.951	1.704	3.176	−2.751	1.588
160	3.479	−3.269	1.190	3.230	−3.035	1.105
170	3.514	−3.461	0.610	3.270	−3.220	0.568
180	3.502	−3.502	0	3.271	−3.271	0

Table 2

Medium Headform — Exterior Dimensions (Continued)

	Level +5 Z=2.250			Level +6 Z=2.560		
Θ	R	X	Y	R	X	Y
0	2.526	2.526	0	1.798	1.798	0
10	2.521	2.483	0.483	1.798	1.771	0.312
20	2.464	2.315	0.843	1.757	1.651	0.601
30	2.387	2.067	1.194	1.719	1.489	0.860
40	2.305	1.766	1.482	1.678	1.285	1.079
50	2.232	1.435	1.710	1.652	1.062	1.266
60	2.174	1.087	1.883	1.641	0.821	1.421
70	2.144	0.733	2.015	1.645	0.563	1.546
80	2.132	0.370	2.100	1.673	0.291	1.648
90	2.147	0	2.147	1.712	0	1.712
100	2.213	−0.384	2.179	1.809	−0.314	1.782
110	2.316	−0.792	2.176	1.925	−0.658	1.809
120	2.463	−1.232	2.133	2.066	−1.033	1.789
130	2.624	−1.687	2.010	2.213	−1.423	1.695
140	2.763	−2.117	1.776	2.358	−1.806	1.516
150	2.863	−2.479	1.432	2.469	−2.138	1.235
160	2.919	−2.743	0.988	2.536	−2.383	0.867
170	2.954	−2.909	0.513	2.561	−2.522	0.445
180	2.958	−2.958	0	2.556	−2.556	0

	Level +7 Z=2.750		
Θ	R	X	Y
0	1.081	1.081	0
10	1.088	1.072	0.189
20	1.055	0.991	0.361
30	1.039	0.900	0.520
40	1.039	0.796	0.668
50	1.052	0.676	0.806
60	1.068	0.534	0.925
70	1.106	0.378	1.039
80	1.171	0.203	1.153
90	1.242	0	1.242
100	1.422	−0.247	1.400
110	1.489	−0.509	1.399
120	1.683	−0.842	1.458
130	1.801	−1.158	1.380
140	1.954	−1.497	1.256
150	2.083	−1.804	1.042
160	2.138	−2.009	0.731
170	2.175	−2.142	0.378
180	2.175	−2.175	0

Notes:

1. Apex is located at (-0.75, 0, 3.02) for (X,Y,Z) or (0.75, 180, 3.02) for (R, Θ, Z).
2. Center of ear opening is located at (0.40, 2.78, -2.36) for (X,Y,Z) or (2.80, 81.8, -2.36) for (R,Θ,Z).
3. Scale all dimensions by 0.8941 for small headform.
4. Scale all dimensions by 1.069 for large headform.
5. Headform is symmetrical about the mid-sagittal plane.
6. Units:
   R,X,Y,Z — inches.
   Θ — degrees.
7. To obtain metric equivalents in centimeters, multiply each figure by 2.54.

Figure 6

Small Headform — Interior Design

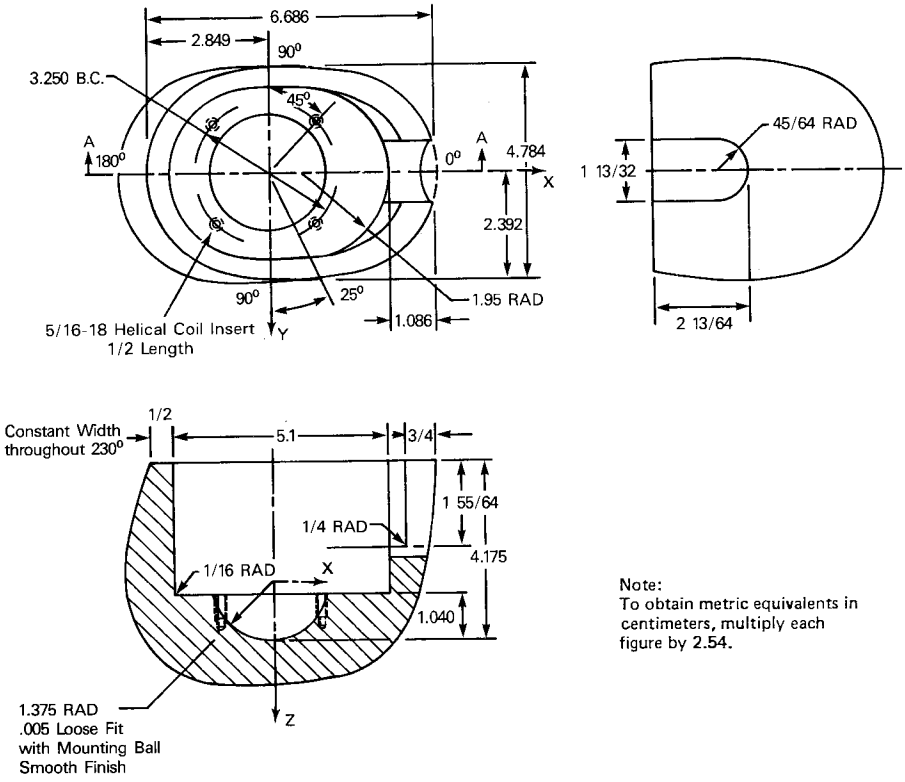

Note:
To obtain metric equivalents in centimeters, multiply each figure by 2.54.

Figure 7

Medium Headform — Interior Design

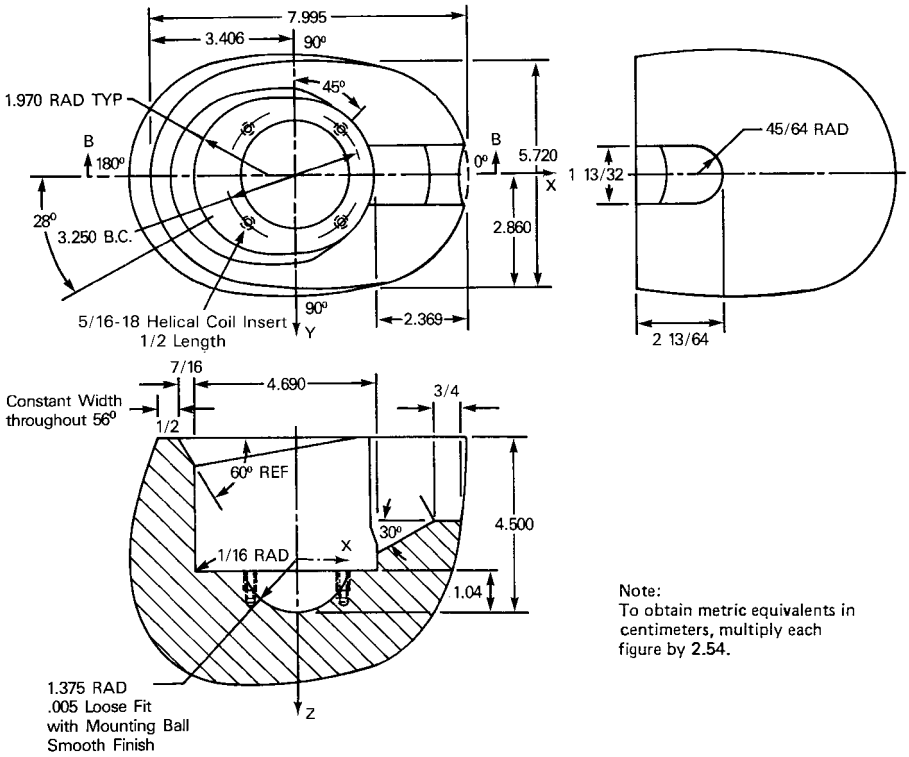

Note:
To obtain metric equivalents in centimeters, multiply each figure by 2.54.

Figure 8

Large Headform — Interior Design

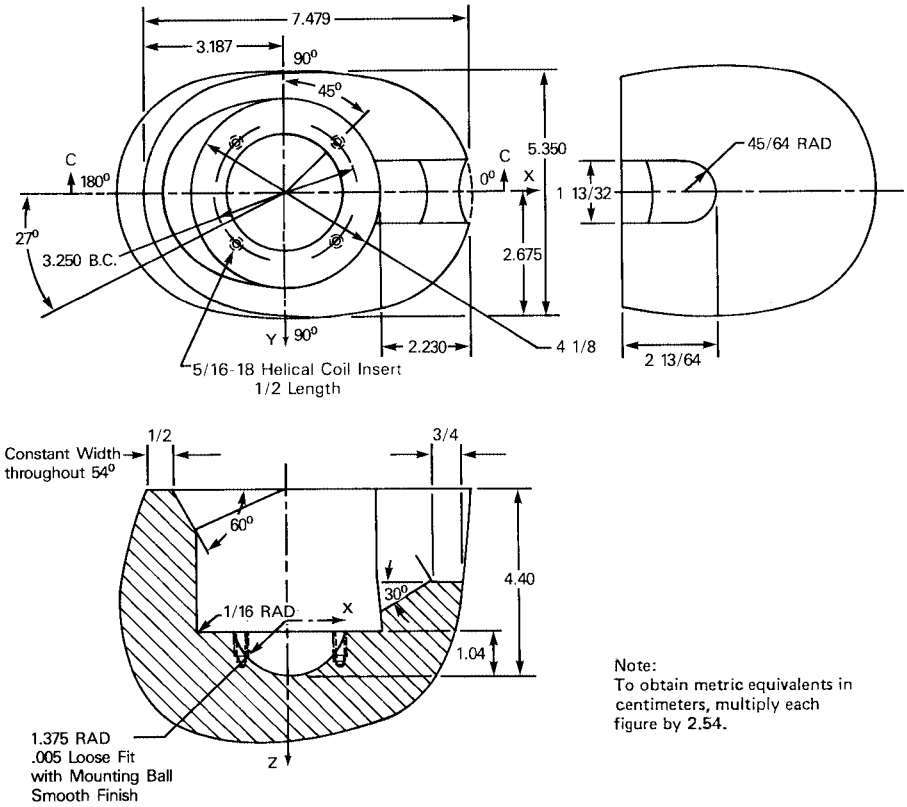

[38 FR 22391, Aug. 20, 1973, as amended at 39 FR 3554, Jan. 28, 1974; 45 FR 15181, Mar. 10, 1980; 53 FR 11288, Apr. 6, 1988; 53 FR 12529, Apr. 15, 1988]

§ 571.219 Standard No. 219; Windshield zone intrusion.

S1. *Scope.* This standard specifies limits for the displacement into the windshield area of motor vehicle components during a crash.

S2. *Purpose.* The purpose of this standard is to reduce crash injuries and fatalities that result from occupants contacting vehicle components displaced near or through the windshield.

S3. *Application.* This standard applies to passenger cars and to multipurpose passenger vehicles, trucks and buses of 4,536 kilograms or less gross vehicle weight rating. However, it does not apply to forward control vehicles, walk-in van-type vehicles, or to open-

body-type vehicles with fold-down or removable windshields.

S4. *Definitions. Daylight Opening* (DLO) means the maximum unobstructed opening through the glazing surface, including reveal or garnish moldings adjoining the surface, as measured parallel to the outer surface of the glazing material.

S5. *Requirement.* When the vehicle travelling longitudinally forward at any speed up to and including 48 km/h impacts a fixed collision barrier that is perpendicular to the line of travel of the vehicle, under the conditions of S7, no part of the vehicle outside the occupant compartment, except windshield molding and other components designed to be normally in contact with the windshield, shall penetrate the protected zone template, affixed according to S6, to a depth of more than 6 mm, and no such part of a vehicle shall penetrate the inner surface of that portion of the windshield, within the DLO, below the protected zone defined in S6.

S6. *Protected zone template.*

S6.1 The lower edge of the protected zone is determined by the following procedure (See Figure 1).

(a) Place a 165 mm diameter rigid sphere, with a mass of 6.8 kg in a position such that it simultaneously contacts the inner surface of the windshield glazing and the surface of the instrument panel, including padding. If any accessories or equipment such as the steering control system obstruct positioning of the sphere, remove them for the purposes of this procedure.

(b) Draw the locus of points on the inner surface of the windshield contactable by the sphere across the width of the instrument panel. From the outermost contactable points, extend the locus line horizontally to the edges of the glazing material.

(c) Draw a line on the inner surface of the windshield below and 13 mm distant from the locus line.

(d) The lower edge of the protected zone is the longitudinal projection onto the outer surface of the windshield of the line determined in S6.1(c).

S6.2 The protected zone is the space enclosed by the following surfaces, as shown in Figure 1:

(a) The outer surface of the windshield in its precrash configuration.

(b) The locus of points 76 mm outward along perpendiculars drawn to each point on the outer surface of the windshield.

(c) The locus of lines forming a 45° angle with the outer surface of the windshield at each point along the top and side edges of the outer surface of the windshield and the lower edge of the protected zone determined in S6.1, in the plane perpendicular to the edge at that point.

S6.3 A template is cut or formed from Styrofoam, type DB, cut cell, to the dimensions of the zone as determined in S6.2. The template is affixed to the windshield so that it delineates the protected zone and remains affixed throughout the crash test.

S7. *Test conditions.* The requirement of S5. shall be met under the following conditions:

S7.1 The protected zone template is affixed to the windshield in the manner described in S6.

S7.2 The hood, hood latches, and any other hood retention components are engaged prior to the barrier crash.

S7.3 Adjustable cowl tops or other adjustable panels in front of the windshield are in the position used under normal operating conditions when windshield wiping systems are not in use.

S7.4 The parking brake is disengaged and the transmission is in neutral.

S7.5 Tires are inflated to the vehicle manufacturer's specifications.

S7.6 The fuel tank is filled to any level from 90 to 95 per cent of capacity.

S7.7 The vehicle, including test devices and instrumentation, is loaded as follows:

(a) Except as specified in S7.6, a passenger car is loaded to its unloaded vehicle weight plus its rated cargo and luggage capacity weight, secured in the luggage area, plus a 50th-percentile test dummy as specified in part 572 of this chapter at each front outboard designated seating position and at any other position whose protection system is required to be tested by a dummy under the provisions of Standard No. 208. Each dummy is restrained only by means that are installed for protection at its seating position.

(b) Except as specified in S7.6, a multipurpose passenger vehicle, truck or bus is loaded to its unloaded vehicle weight, plus 136 kg or its rated cargo and luggage capacity, whichever is less, secured to the vehicle, plus a 50th-percentile test dummy as specified in part 572 of this chapter at each front outboard designated seating postion and at any other position whose protection system is required to be tested by a dummy under the provisions of Standard No. 208. Each dummy is restrained only by means that are installed for protection at its seating position. The load is distributed so that the mass on each axle as measured at the tire-ground interface is in proportion to its GAWR. If the mass on any axle when the vehicle is loaded to its unloaded vehicle weight plus dummy mass exceeds the axle's proportional share of the test mass, the remaining mass is placed so that the mass on that axle remains the same. For the purposes of this section, unloaded vehicle weight does not include the mass of work-performing accessories. Vehicles are tested to a maximum unloaded vehicle weight of 2,495 kg.

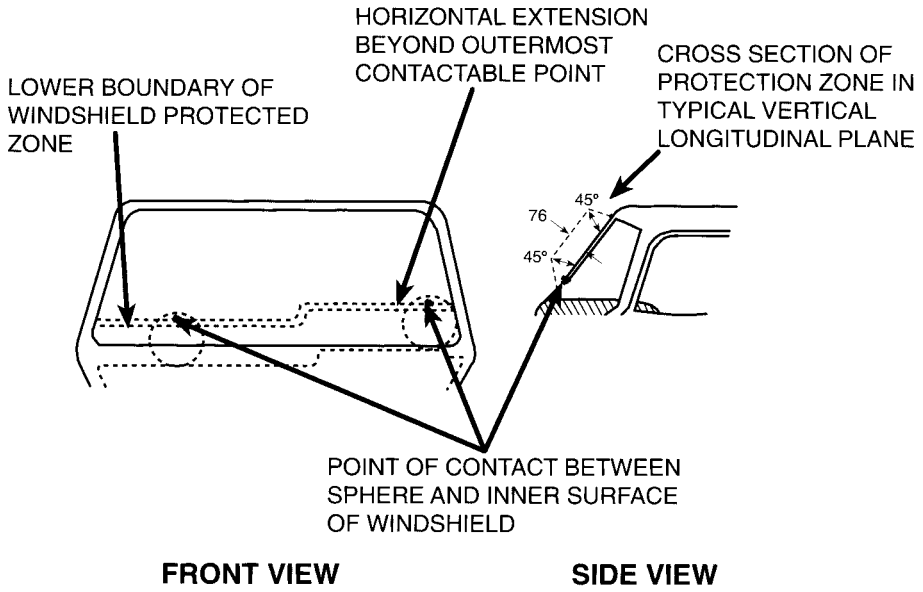

Figure 1.—WINDSHIELD PROTECTION ZONE
All dimensions in millimeters (mm)

[40 FR 25462, June 16, 1975, as amended at 40 FR 53033, Nov. 14, 1975; 41 FR 54946, Dec. 16, 1976; 45 FR 22046, Apr. 3, 1980; 63 FR 28946, May 27, 1998]

§ 571.220 Standard No. 220; School bus rollover protection.

S1. *Scope*. This standard establishes performance requirements for school bus rollover protection.

S2. *Purpose*. The purpose of this standard is to reduce the number of deaths and the severity of injuries that result from failure of the school bus body structure to withstand forces encountered in rollover crashes.

S3. *Applicability*. This standard applies to school buses.

S4. *Requirements*. When a force in Newtons equal to 1½ times the unloaded vehicle weight in kilograms multiplied by 9.8 m/sec^2 is applied to the roof of the vehicle's body structure through a force application plate as specified in S5, Test procedures—

(a) The downward vertical movement at any point on the application plate shall not exceed 130 mm and

(b) Each emergency exit of the vehicle provided in accordance with Standard No. 217 (§571.217) shall be capable of opening as specified in that standard during the full application of the force and after release of the force, except that an emergency exit located in the roof of the vehicle is not required to be capable of being opened during the application of the force. A particular vehicle (i.e., test specimen) need not meet the emergency exit opening requirement after release of force if it is subjected to the emergency exit opening requirements during the full application of the force.

S5. *Test procedures*. Each vehicle shall be capable of meeting the requirements of S4. when tested in accordance with the procedures set forth below.

S5.1 With any non-rigid chassis-to-body mounts replaced with equivalent rigid mounts, place the vehicle on a rigid horizontal surface so that the vehicle is entirely supported by means of the vehicle frame. If the vehicle is constructed without a frame, place the vehicle on its body sills. Remove any components which extend upward from the vehicle roof.

S5.2 Use a flat, rigid, rectangular force application plate that is measured with respect to the vehicle roof longitudinal and lateral centerlines,

(a) In the case of a vehicle with a GVWR of more than 4,536 kg, 305 mm shorter than the vehicle roof and 914 mm wide; and

(b) In the case of a vehicle with a GVWR of 4,536 kg or less, 127 mm longer and 127 mm wider than the vehicle roof. For purposes of these measurements, the vehicle roof is that structure, seen in the top projected view, that coincides with the passenger and driver compartment of the vehicle.

S5.3 Position the force application plate on the vehicle roof so that its rigid surface is perpendicular to a vertical longitudinal plane and it contacts the roof at not less than two points, and so that, in the top projected view, its longitudinal centerline coincides with the longitudinal centerline of the vehicle, and its front and rear edges are an equal distance inside the front and rear edges of the vehicle roof at the centerline.

S5.4 Apply an evenly-distributed vertical force in the downward direction to the force application plate at any rate not more than 13 mm per second, until a force of 2,224 N has been applied.

S5.5 Apply additional vertical force in the downward direction to the force application plate at a rate of not more than 13 mm per second until the force specified in S4. has been applied, and maintain this application of force.

S5.6 Measure the downward movement of any point on the force application plate which occurred during the application of force in accordance with S5.5.

S5.7 To test the capability of the vehicle's emergency exits to open in accordance with S4.(b)—

(a) In the case of testing under the full application of force, open the emergency exits as specified in S4.(b) while maintaining the force applied in accordance with S5.4 and S5.5; and

(b) In the case of testing after the release of all force, release all downward force applied to the force application plate and open the emergency exits as specified in S4.(b).

S6. *Test conditions*. The following conditions apply to the requirements specified in S4.

S6.1 *Temperature*. The ambient temperature is any level between 0 °C and 32 °C.

S6.2 *Windows and doors*. Vehicle windows, doors, and emergency exits are in the fully-closed position, and latched but not locked.

[41 FR 3875, Jan. 27, 1976, as amended at 41 FR 36026, 36027, Aug. 26, 1976; 63 FR 28948, May 27, 1998]

§571.221 Standard No. 221; School bus body joint strength.

S1. *Scope*. This standard establishes requirements for the strength of the body panel joints in school bus bodies.

S2. *Purpose.* The purpose of this standard is to reduce deaths and injuries resulting from the structural collapse of school bus bodies during crashes.

S3. *Application.* This standard applies to school buses with gross vehicle weight ratings of more than 10,000 pounds.

S4. *Definitions. Body component* means a part of a bus body made from a single piece of homogeneous material or from a single piece of composite material such as plywood.

Body panel means a body component used on the exterior or interior surface to enclose the bus' occupant space.

Body panel joint means the area of contact or close proximity between the edges of a body panel and another body component, excluding spaces designed for ventilation or another functional purpose, and excluding doors, windows, and maintenance access panels.

Bus body means the portion of a bus that encloses the bus's occupant space, exclusive of the bumpers, the chassis frame, and any structure forward of the forwardmost point of the windshield mounting.

S5. *Requirement.* When tested in accordance with the procedure of S6., each body panel joint shall be capable of holding the body panel to the member to which it is joined when subjected to a force of 60% of the tensile strength of the weakest joined body panel determined pursuant to S6.2.

S6. *Procedure.*

S6.1 *Preparation of the test specimen.*

S6.1.1 If a body panel joint is 8 inches long or longer, cut a test specimen that consists of any randomly selected 8-inch segment of the joint, together with a portion of the bus body whose dimensions, to the extent permitted by the size of the joined parts, are those specified in Figure 1, so that the specimen's centerline is perpendicular to the joint at the midpoint of the joint segment. Where the body panel joint is not fastened continuously, select the segment so that it does not bisect a spot weld or a discrete fastener.

S6.1.2 If a joint is less than 8 inches long, cut a test specimen with enough of the adjacent material to permit it to be held in the tension testing machine specified in S6.3.

S6.1.3 Prepare the test specimen in accordance with the preparation procedures specified in the 1973 edition of the Annual Book of ASTM Standards, published by the American Society for Testing and Materials, 1916 Race Street, Philadelphia, Pennsylvania 19103.

S6.2 *Determination of minimum allowable strength.* For purposes of determining the minimum allowable joint strength, determine the tensile strengths of the joined body components as follows:

FIGURE 1

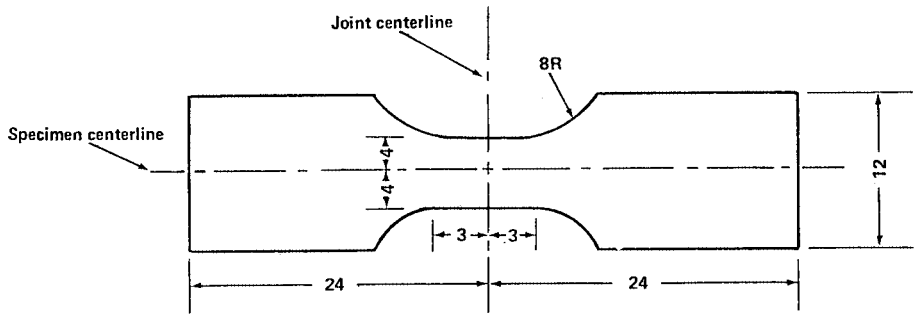

All dimensions in inches

(a) If the mechanical properties of a material are specified by the American Society for Testing and Materials, the relative tensile strength for such a material is the minimum tensile strength specified for that material in the 1973 edition of the Annual Book of ASTM Standards.

(b) If the mechanical properties of a material are not specified by the American Society for Testing and Materials, determine its tensile strength by cutting a specimen from the bus body outside the area of the joint and by testing it in accordance with S6.3.

S6.3 *Strength test.*

S6.3.1 Grip the joint specimen on opposite sides of the joint in a tension testing machine calibrated in accordance with Method E4, Verification of Testing Machines, of the American Society for Testing and Materials (1973 Annual Book of ASTM Standards).

S6.3.2 Adjust the testing machine grips so that the joint, under load, will be in stress approximately perpendicular to the joint.

S6.3.3 Apply a tensile force to the specimen by separating the heads of the testing machine at any uniform rate not less than ⅛ inch and not more than ⅜-inch per minute until the specimen separates.

[41 FR 3872, Jan. 27, 1976, as amended at 41 FR 36027, Aug. 26, 1976]

EFFECTIVE DATE NOTE: At 66 FR 64366, Dec. 13, 2001, § 571.221 was amended by revising S3; revising the definitions of ''body panel joint'' and ''bus body'' in S4; adding, in alphabetical order, the definitions of ''maintenance access panel'', ''passenger compartment'' and ''serviceable component'' to S4; and revising S5 and S6 and figure 1, effective Jan. 1, 2003. For the convenience of the user, the revised text is set forth as follows:

§ 571.221 Standard No. 221, School Bus Body Joint Strength.

* * * * *

S3. Application. This standard applies to school buses.

S4. Definitions.

Body panel joint means the area of contact or close proximity between the edges of a body panel and another body component, including but not limited to floor panels, and body panels made of composite materials such as plastic or plywood, excluding trim and decorative parts which do not contribute to the strength of the bus body, members such as rub rails which are entirely outside of body panels, ventilation panels, components provided for functional purposes, and engine access covers.

Bus body means that portion of a bus that encloses the bus occupant space, including the floor, but excluding the bumpers and chassis frame and any structure forward of the passenger compartment.

* * * * *

Maintenance access panel means a body panel which must be moved or removed to provide access to one or more serviceable component(s).

Passenger compartment means space within the school bus interior that is between a vertical transverse plane located 762 mm in front of the forwardmost passenger seating reference point and including a vertical transverse plane tangent to the rear interior wall of the bus at the vehicle centerline.

Serviceable component means any part of the bus, of either a mechanical or electrical nature, which is explicitly identified by the bus chassis and/or body manufacturer in the owner's manual or factory service manual as requiring routine maintenance actions at intervals of one year or less. Tubing, wires and harnesses are considered to be serviceable components only at their attachments.

S5 Requirements.

S5.1 Except as provided in S5.2, each body panel joint, including small, curved, and complex joints, when tested in accordance with the procedure of S6, shall hold the body panel to the member to which it is joined when subjected to a force of 60 percent of the tensile strength of the weakest joined body panel determined pursuant to S6.2.

S5.1.1 Body panels attached to each other shall have no unattached segment at the joint longer than 203 mm.

S5.2 Exclusions

S5.2.1 The requirements of S5.1 do not apply to—

(a) Any interior maintenance access panel or joint which lies forward of the passenger compartment.

(b) Any interior maintenance access panel within the passenger compartment that does not exceed 305 mm when measured across any two points diametrically on opposite sides of the opening.

(c) Trim and decorative parts which do not contribute to the strength of the joint, support members such as rub rails which are entirely outside of body panels, doors and windows, ventilation panels, and engine access covers.

S6 Procedure

S6.1 Preparation of the test specimen.

S6.1.1 If a body panel joint is 203 mm or longer, cut a test specimen that consists of any 203 mm segment of the joint, together

with a portion of the bus body whose dimensions are those specified in Figure 1, so that the specimen's centerline is perpendicular to the joint at the midpoint of the joint segment. Where the body panel joint is not fastened continuously, select the segment so that it does not bisect a spot weld or a discrete fastener. Support members which contribute to the strength of a body panel joint, such as rub rails on the outside of body panels or underlying structure attached to joint members, shall remain attached to the test specimen, except that material may be removed from the support members as necessary to clear the gripping areas of the joint members being tested.

S6.1.2 If a joint is less than 305 mm long, cut a test specimen with enough of the adjacent material to permit it to be held in the tension testing machine specified in S6.3.

S6.1.3 Prepare the test specimen in accordance with the preparation procedures specified in the 1989 edition of the Annual Book of American Society for Testing and Materials (ASTM) Standards.

S6.2 *Determination of minimum allowable strength.* For purposes of determining the minimum allowable joint strength, determine the tensile strengths of the joined body components as follows:

(a) If the mechanical properties of a joint component material are specified by the ASTM in the 1989 Annual Book of ASTM Standards, the lowest value of that material's thickness and tensile strength per unit of area shown in that source shall be used.

(b) If the mechanical properties of a material are not specified by the ASTM in the 1989 Annual Book of ASTM Standards, determine its tensile strength by cutting a sheet specimen from outside the joint region of the bus body in accordance with Figure 1 of E 8–89 Standard Test Methods of Tension Testing of Metallic Materials, in Volume 03.01 of the 1989 Annual Book of ASTM Standards, and by testing it in accordance with S6.3.

(c) The cross sectional area of material removed to facilitate the installation of fasteners shall be subtracted from the cross-sectional area of the panel in the determination of the tensile strength of the weakest joined body panel.

S6.3 Strength Test.

S6.3.1 The joint specimen is gripped on opposite sides of the joint in a tension testing machine in accordance with the 1989 Annual Book of ASTM Standards.

S6.3.2 Adjust the testing machine grips so that the applied force on the joint is at 90 degrees plus or minus 3 degrees from the joint centerline, as shown in Figure 1.

S6.3.3 A tensile force is applied to the specimen by separating the heads of the testing machine at any uniform rate not less than 3 mm and not more than 10 mm per minute until the specimen separates.

FIGURE 1

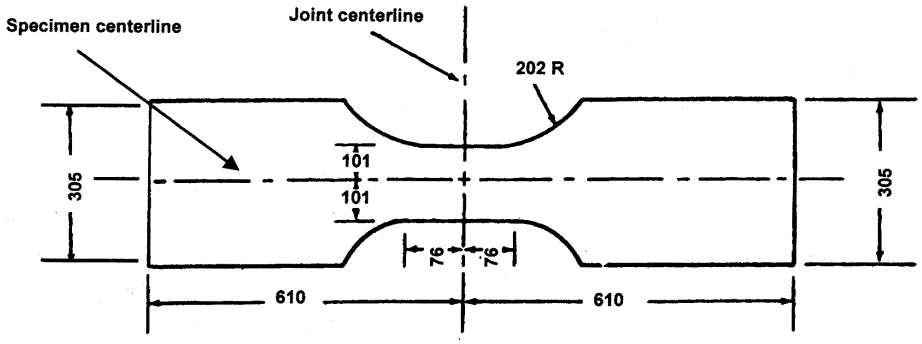

All dimensions in millimeters

EDITORIAL NOTE: At 65 FR 11754, Mar. 6, 2000, § 571.221 was amended by revising S5.2.1(a), effective Apr. 5, 2000. However, paragraph S5.2.1(a) does not exist in the text in effect at that time. The revised text reads as follows:

§ 571.221 Standard No. 221, School bus body joint strength.

* * * * *

S5.2.1 The requirements of S5.1.1 and S5.1.2 do not apply to—

(a) Any interior maintenance access panel which lies forward of the passenger compartment, or which is less than 305 mm when measured across any two points diametrically on opposite sides of the opening.

* * * * *

§ 571.222 Standard No. 222; School bus passenger seating and crash protection.

S1. *Scope*. This standard establishes occupant protection requirements for school bus passenger seating and restraining barriers.

S2. *Purpose*. The purpose of this standard is to reduce the number of deaths and the severity of injuries that result from the impact of school bus occupants against structures within the vehicle during crashes and sudden driving maneuvers.

S3. *Application*. This standard applies to school buses.

S4. *Definitions*. *Contactable surface* means any surface within the zone specified in S5.3.1.1 that is contactable from any direction by the test device described in S6.6, except any surface on the front of a seat back or restraining barrier 76 mm or more below the top of the seat back or restraining barrier.

School bus passenger seat means a seat in a school bus, other than the driver's seat.

Wheelchair means a wheeled seat frame for the support and conveyance of a physically disabled person, comprised of at least a frame, seat, and wheels.

Wheelchair occupant restraint anchorage means the provision for transferring wheelchair occupant restraint system loads to the vehicle structure.

Wheelchair securement anchorage means the provision for transferring wheelchair securement device loads to the vehicle structure.

Wheelchair securement device means a strap, webbing or other device used for securing a wheelchair to the school bus, including allnecessary buckles and other fasteners.

S4.1 The number of seating positions considered to be in a bench seat is expressed by the symbol W, and calculated as the bench width in millimeters divided by 381 and rounded to the nearest whole number.

S5. *Requirements*. (a) Each vehicle with a gross vehicle weight rating of more than 4,536 kg shall be capable of meeting any of the requirements set forth under this heading when tested under the conditions of S6. However, a particular school bus passenger seat (i.e., test specimen) in that weight class need not meet further requirements after having met S5.1.2 and S5.1.5, or having been subjected to either S5.1.3, S5.1.4, or S5.3.

(b) Each vehicle with a gross vehicle weight rating of 4,536 kg or less shall be capable of meeting the following requirements at all seating positions other than the driver's seat:

(1)(A) In the case of vehicles manufactured before September 1, 1991, the requirements of §§ 571.208, 571.209, and 571.210 as they apply to multipurpose passenger vehicles; or

(B) In the case of vehicles manufactured on or after September 1, 1991, the requirements of S4.4.3.3 of § 571.208 and the requirements of §§ 571.209 and 571.210 as they apply to school buses with a gross vehicle weight rating of 4,536 kg or less; and

(2) The requirements of S5.1.2, S5.1.3, S5.1.4, S5.1.5, S5.3, and S5.4 of this standard. However, the requirements of §§ 571.208 and 571.210 shall be met at W seating positions in a bench seat using a body block as specified in Figure 2 of this standard, and a particular school bus passenger seat (i.e., a test specimen) in that weight class need not meet further requirements after having met S5.1.2 and S5.1.5, or after having been subjected to either S5.1.3, S5.1.4, or S5.3 of this standard or § 571.210.

S5.1 *Seating requirements*. School bus passenger seats shall be forward facing.

S5.1.1 [Reserved]

S5.1.2 *Seat back height and surface area*. Each school bus passenger seat shall be equipped with a seat back that, in the front projected view, has a front surface area above the horizontal plane that passes through the seating reference point, and below the horizontal plane 508 mm above the seating

reference point, of not less than 90 percent of the seat bench width in millimeters multiplied by 508.

S5.1.3 *Seat performance forward.* When a school bus passenger seat that has another seat behind it is subjected to the application of force as specified in S5.1.3.1 and S5.1.3.2, and subsequently, the application of additional force to the seat back as specified in S5.1.3.3 and S5.1.3.4:

(a) The seat back force/deflection curve shall fall within the zone specified in Figure 1;

(b) Seat back deflection shall not exceed 356 mm; (for determination of (a) and (b) the force/deflection curve describes only the force applied through the upper loading bar, and only the forward travel of the pivot attachment point of the upper loading bar, measured from the point at which the initial application of 44 N of force is attained.)

(c) The seat shall not deflect by an amount such that any part of the seat moves to within 102 mm of any part of another school bus passenger seat or restraining barrier in its originally installed position;

(d) The seat shall not separate from the vehicle at any attachment point; and

(e) Seat components shall not separate at any attachment point.

S5.1.3.1 Position the loading bar specified in S6.5 so that it is laterally centered behind the seat back with the bar's longitudinal axis in a transverse plane of the vehicle and in any horizontal plane between 102 mm above and 102 mm below the seating reference point of the school bus passenger seat behind the test specimen.

S5.1.3.2 Apply a force of 3,114W newtons horizontally in the forward direction through the loading bar at the pivot attachment point. Reach the specified load in not less than 5 nor more than 30 seconds.

S5.1.3.3 No sooner than 1.0 second after attaining the required force, reduce that force to 1,557W newtons and, while maintaining the pivot point position of the first loading bar at the position where the 1,557W newtons is attained, position a second loading bar described in S6.5 so that it is laterally centered behind the seat back with the bar's longitudinal axis in a transverse plane of the vehicle and in the horizontal plane 406 mm above the seating reference point of the school bus passenger seat behind the test specimen, and move the bar forward against the seat back until a force of 44 N has been applied.

S5.1.3.4 Apply additional force horizontally in the forward direction through the upper bar until 452W joules of energy have been absorbed in deflecting the seat back (or restraining barrier). Apply the additional load in not less than 5 seconds nor more than 30 seconds. Maintain the pivot attachment point in the maximum forward travel position for not less than 5 seconds nor more than 10 seconds and release the load in not less than 5 nor more than 30 seconds. (For the determination of S5.1.3.4 the force/deflection curve describes only the force applied through the upper loading bar, and the forward and rearward travel distance of the upper loading bar pivot attachment point measured from the position at which the initial application of 44 N of force is attained.)

S5.1.4 *Seat performance rearward.* When a school bus passenger seat that has another seat behind it is subjected to the application of force as specified in S5.1.4.1 and S5.1.4.2:

(a) Seat back force shall not exceed 9,786 N;

(b) Seat back deflection shall not exceed 254 mm; (for determination of (a) and (b) the force/deflection curve describes only the force applied through the loading bar, and only the rearward travel of the pivot attachment point of the loading bar, measured from the point at which the initial application of 222 N is attained.

(c) The seat shall not deflect by an amount such that any part of the seat moves to within 102 mm of any part of another passenger seat in its originally installed position;

(d) The seat shall not separate from the vehicle at any attachment point; and

(e) Seat components shall not separate at any attachment point.

S5.1.4.1 Position the loading bar described in S6.5 so that it is laterally centered forward of the seat back with

the bar's longitudinal axis in a transverse plane of the vehicle and in the horizontal plane 343 mm above the seating reference point of the test specimen, and move the loading bar rearward against the seat back until a force of 222 N has been applied.

S5.1.4.2 Apply additional force horizontally rearward through the loading bar until 316W joules (J) of energy has been absorbed in deflecting the seat back. Apply the additional load in not less than 5 seconds nor more than 30 seconds. Maintain the pivot attachment point in the maximum rearward travel position for not less than 5 seconds nor more than 10 seconds and release the load in not less than 5 seconds nor more than 30 seconds. (For determination of S5.1.4.2 the force deflection curve describes the force applied through the loading bar and the rearward and forward travel distance of the loading bar pivot attachment point measured from the position at which the initial application of 222 N of force is attained.)

S5.1.5 *Seat cushion retention.* In the case of school bus passenger seats equipped with seat cushions, with all manual attachment devices between the seat and the seat cushion in the manufacturer's designated position for attachment, the seat cushion shall not separate from the seat at any attachment point when subjected to an upward force in newtons of 5 times the mass of the seat cushion in kilograms and multiplied by 9.8 m/s^2, applied in any period of not less than 1 nor more than 5 seconds, and maintained for 5 seconds.

S5.2 *Restraining barrier requirements.* Each vehicle shall be equipped with a restraining barrier forward of any designated seating position that does not have the rear surface of another school bus passenger seat within 610 mm of its seating reference point, measured along a horizontal longitudinal line through the seating reference point in the forward direction.

S5.2.1 *Barrier-seat separation.* The horizontal distance between the restraining barrier's rear surface and the seating reference point of the seat in front of which the barrier is required shall not be more than 610 mm measured along a horizontal longitudinal line through the seating reference point in the forward direction.

S5.2.2 *Barrier position and rear surface area.* The position and rear surface area of the restraining barrier shall be such that, in a front projected view of the bus, each point of the barrier's perimeter coincides with or lies outside of the perimeter of the seat back of the seat for which it is required.

S5.2.3 *Barrier performance forward.* When force is applied to the restraining barrier in the same manner as specified in S5.1.3.1 through S5.1.3.4 for seating performance tests:

(a) The restraining barrier force/deflection curve shall fall within the zone specified in Figure 1;

(b) Restraining barrier deflection shall not exceed 356 mm; (for computation of (a) and (b) the force/deflection curve describes only the force applied through the upper loading bar, and only the forward travel of the pivot attachment point of the loading bar, measured from the point at which the initial application of 44 N of force is attained.)

(c) Restraining barrier deflection shall not interfere with normal door operation;

(d) The restraining barrier shall not separate from the vehicle at any attachment point; and

(e) Restraining barrier components shall not separate at any attachment point.

S5.3 *Impact zone requirements.*

S5.3.1 *Head protection zone.* Any contactable surface of the vehicle within any zone specified in S5.3.1.1 shall meet the requirements of S5.3.1.2 and S5.3.1.3. However, a surface area that has been contacted pursuant to an impact test need not meet further requirements contained in S5.3.

S5.3.1.1 The head protection zones in each vehicle are the spaces in front of each school bus passenger seat which are not occupied by bus sidewall, window, or door structure and which, in relation to that seat and its seating reference point, are enclosed by the following planes;

(a) Horizontal planes 305 mm and 1016 mm above the seating reference point;

(b) A vertical longitudinal plane tangent to the inboard (aisle side) edge of the seat; and

(c) A vertical longitudinal plane 83 mm inboard of the outboard edge of the seat;

(d) Vertical transverse planes through and 762 mm forward of the reference point.

S5.3.1.2 *Head form impact requirement.* When any contactable surface of the vehicle within the zones specified in S5.3.1.1 is impacted from any direction at 6.7 m/s by the head form described in S6.6, the axial acceleration at the center of gravity of the head form shall be such that the expression

$$\left[\frac{1}{t1-t2}\int_{t1}^{t2} a\,dt\right]^{2.5}(t1-t2)$$

shall not exceed 1,000 where ''a'' is the axial acceleration expressed as a multiple of ''*g*'' (the acceleration due to gravity), and ''t_1'' and ''t_2'' are any two points in time during the impact.

S5.3.1.3 *Head form force distribution.* When any contactable surface of the vehicle within the zones specified in S5.3.1.1 is impacted from any direction at 6.7 m/s by the head form described in S6.6, the energy necessary to deflect the impacted material shall be not less than 4.5 joules before the force level on the head form exceeds 667 N. When any contactable surface within such zones is impacted by the head form from any direction at 1.5 m/s the contact area on the head form surface shall be not less than 1,935 mm^2.

S5.3.2 *Leg protection zone.* Any part of the seat backs or restraining barriers in the vehicle within any zone specified in S5.3.2.1 shall meet the requirements of S5.3.2.2.

S5.3.2.1 The leg protection zones of each vehicle are those parts of the school bus passenger seat backs and restraining barriers bounded by horizontal planes 305 mm above and 102 mm below the seating reference point of the school bus passenger seat immediately behind the seat back or restraining barrier.

S5.3.2.2 When any point on the rear surface of that part of a seat back or restraining barrier within any zone specified in S5.3.2.1 is impacted from any direction at 4.9 m/s by the knee form specified in S6.7, the resisting force of the impacted material shall not exceed 2,669 N and the contact area on the knee form surface shall not be less than 1,935 mm^2.

S5.4 Each school bus having one or more locations designed for carrying a person seated in a wheelchair shall comply with S5.4.1 through S5.4.4 at each such wheelchair location.

S5.4.1 *Wheelchair securement anchorages.* Each wheelchair location shall have not less than four wheelchair securement anchorages complying with S5.4.1.1 through S5.4.1.3.

S5.4.1.1 Each wheelchair securement anchorage shall have a wheelchair securement device complying with S5.4.2 attached to it.

S5.4.1.2 The wheelchair securement anchorages at each wheelchair location shall be situated so that—

(a) A wheelchair can be secured in a forward-facing position.

(b) The wheelchair can be secured by wheelchair securement devices at two locations in the front and two locations in the rear.

(c) The front wheel of a three-wheeled wheelchair can be secured.

S5.4.1.3 Each wheelchair securement anchorage shall be capable of withstanding a force of 13,344 Newtons applied as specified in paragraphs (a) through (d) of this section. When more than one securement device share a common anchorage, the anchorage shall be capable of withstanding a force of 13,344 Newtons multiplied by the number of securement devices sharing that anchorage.

(a) The initial application force shall be applied at an angle of not less than 30 degrees, but not more than 60 degrees, measured from the horizontal. (See Figure 4.)

(b) The horizontal projection of the force direction shall be within a horizontal arc of ±45 degrees relative to a longitudinal line which has its origin at the anchorage location and projects rearward for an anchorage whose wheelchair securement device is intended to secure the front of the wheelchair and forward for an anchorage whose wheelchair securement device is intended to secure the rear of the wheelchair. (See Figure 4.)

(c) The force shall be applied at the onset rate of not more than 133,440 Newtons per second.

(d) The 13,344 Newton force shall be attained in not more than 30 seconds, and shall be maintained for 10 seconds.

S5.4.2 *Wheelchair securement devices.* Each wheelchair securement device shall—

(a) If incorporating webbing or a strap—

(1) Comply with the requirements for Type 1 safety belt systems in S4.2, S4.3, and S4.4(a) of FMVSS No. 209, *Seat Belt Assemblies*; and

(2) Provide a means of adjustment to remove slack from the device.

(b) If not incorporating webbing or a strap, limit movement of the wheelchair through either the equipment design or a means of adjustment.

S5.4.3 *Wheelchair occupant restraint anchorages.*

S5.4.3.1 Each wheelchair location shall have:

(a) Not less than one anchorage for the upper end of the upper torso restraint; and

(b) Not less than two floor anchorages for wheelchair occupant pelvic and upper torso restraint.

S5.4.3.2 Each wheelchair occupant restraint floor anchorage shall be capable of withstanding a force of 13,344 Newtons applied as specified in paragraphs (a) through (d). When more than one wheelchair occupant restraint share a common anchorage, the anchorage shall be capable of withstanding a force of 13,344 Newtons multiplied by the number of occupant restraints sharing that anchorage.

(a) The initial application force shall be applied at a angle of not less than 45 degrees, but not more than 80 degrees, measured from the horizontal. (See Figure 5.)

(b) The horizontal projection of the force direction shall be within a horizontal arc of ±45 degrees relative to a longitudinal line which has its origin at the anchorage and projects forward. (See Figure 5.)

(c) The force shall be applied at an onset rate of not more than 133,440 Newtons per second.

(d) The 13,344 Newton force shall be attained in not more than 30 seconds, and shall be maintained for 10 seconds.

(e) When a wheelchair securement device and an occupant restraint share a common anchorage, including occupant restraint designs that attach the occupant restraint to the securement device or the wheelchair, the loads specified by S5.4.1.3 and S5.4.3.2 shall be applied simultaneously, under the conditions specified in S5.4.3.2 (a) and (b). (See Figure 6.)

S5.4.3.3 Each anchorage for a wheelchair occupant upper torso restraint shall be capable of withstanding a force of 6,672 Newtons applied as specified in paragraphs (a) through (d).

(a) The initial application force shall be applied at a vertical angle of not less than zero degrees, but not more than 40 degrees, below a horizontal plane which passes through the anchorage. (See Figure 7.)

(b) The projection of the force direction onto the horizontal plane shall be within zero degrees and 45 degrees as measured from a longitudinal line with its origin at the anchorage and projecting forward. (See Figure 7.)

(c) The force shall be applied at the onset rate of not more than 66,720 Newtons per second.

(d) The 6,672 Newton force shall be attained in not more than 30 seconds, and shall be maintained for 10 seconds.

S5.4.4 *Wheelchair occupant restraints.*

(a) Each wheelchair location shall have wheelchair occupant pelvic and upper torso restraints attached to the anchorages required by S5.4.3.

(b) Each wheelchair occupant restraint shall comply with the requirements for Type 2 safety belt systems in S4.2, S4.3, and S4.4(b) of FMVSS No. 209, *Seat Belt Assemblies*.

S6. *Test conditions.* The following conditions apply to the requirements specified in S5.

S6.1 *Test surface.* The bus is at rest on a level surface.

S6.2 *Tires.* Tires are inflated to the pressure specified by the manufacturer for the gross vehicle weight rating.

S6.3 *Temperature.* The ambient temperature is any level between 0 degrees C and 32 degrees C.

S6.4 *Seat back position.* If adjustable, a seat back is adjusted to its most upright position.

S6.5 *Loading bar.* The loading bar is a rigid cylinder with an outside diameter of 152 mm that has hemispherical ends with radii of 76 mm and with a surface roughness that does not exceed

1.6 μm, root mean square. The length of the loading bar is 102 mm less than the width of the seat back in each test. The stroking mechanism applies force through a pivot attachment at the center point of the loading bar which allows the loading bar to rotate in a horizontal plane 30 degrees in either direction from the transverse position.

S6.5.1 A vertical or lateral force of 17,792 N applied externally through the pivot attachment point of the loading bar at any position reached during a test specified in this standard shall not deflect that point more than 25 mm.

S6.6 *Head form.* The head form for the measurement of acceleration is a rigid surface comprised of two hemispherical shapes, with total equivalent mass of 5.2 kg. The first of the two hemispherical shapes has a diameter of 166 mm. The second of the two hemispherical shapes has a 50 mm diameter and is centered as shown in Figure 3 to protrude from the outer surface of the first hemispherical shape. The surface roughness of the hemispherical shapes does not exceed 1.6 μm, root mean square.

S6.6.1 The direction of travel of the head form is coincidental with the straight line connecting the centerpoints of the two spherical outer surfaces which constitute the head form shape.

S6.6.2 The head form is instrumented with an acceleration sensing device whose output is recorded in a data channel that conforms to the requirements for a 1,000 Hz channel class as specified in SAE Recommended Practice J211a, December 1971. The head form exhibits no resonant frequency below three times the frequency of the channel class. The axis of the acceleration sensing device coincides with the straight line connecting the centerpoints of the two hemispherical outer surfaces which constitute the head form shape.

S6.6.3 The head form is guided by a stroking device so that the direction of travel of the head form is not affected by impact with the surface being tested at the levels called for in the standard.

S6.7 *Knee form.* The knee form for measurement of force is a rigid 76 millimeter-diameter cylinder, with an equivalent weight of 44 N that has one hemispherical end with a 38 mm radius forming a contact surface of the knee form. The hemispherical surface roughness does not exceed 1.6 μm, root mean square.

S6.7.1 The direction of travel of the knee form is coincidental with the centerline of the rigid cylinder.

S6.7.2 The knee form is instrumented with an acceleration sensing device whose output is recorded in a data channel that conforms to the requirements of a 600 Hz channel class as specified in the SAE Recommended Practice J211a, December 1971. The knee form exhibits no resonant frequency below three times the frequency of the channel class. The axis of the acceleration sensing device is aligned to measure acceleration along the centerline of the cylindrical knee form.

S6.7.3 The knee form is guided by a stroking device so that the direction of travel of the knee form is not affected by impact with the surface being tested at the levels called for in the standard.

S6.8 The head form, knee form, and contactable surfaces are clean and dry during impact testing.

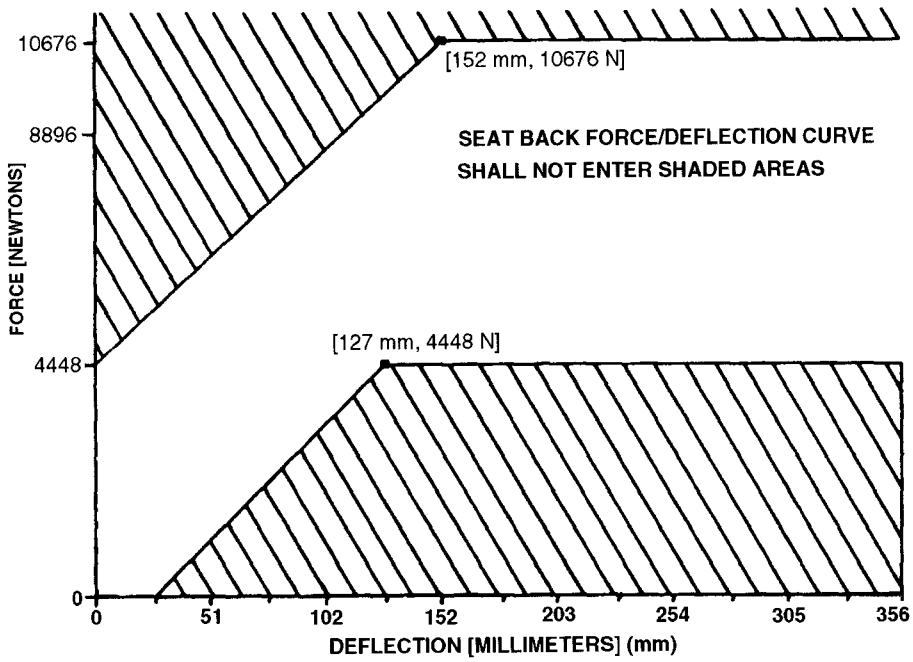

Figure 1.—Force/Deflection Zone

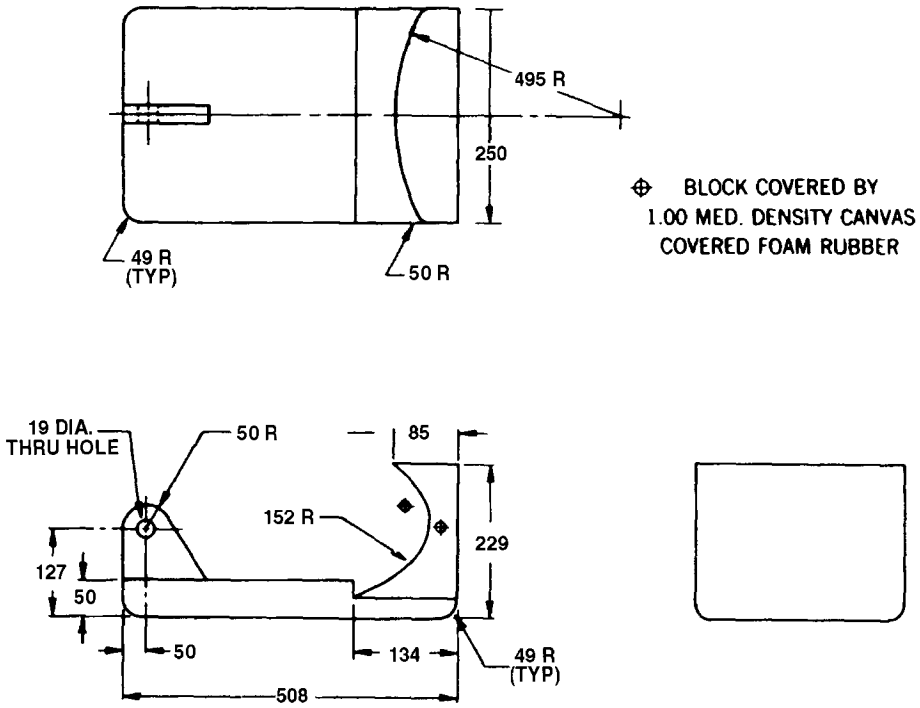

Figure 2.—Body Block for Lap Belt
All Dimensions in Millimeters (mm)

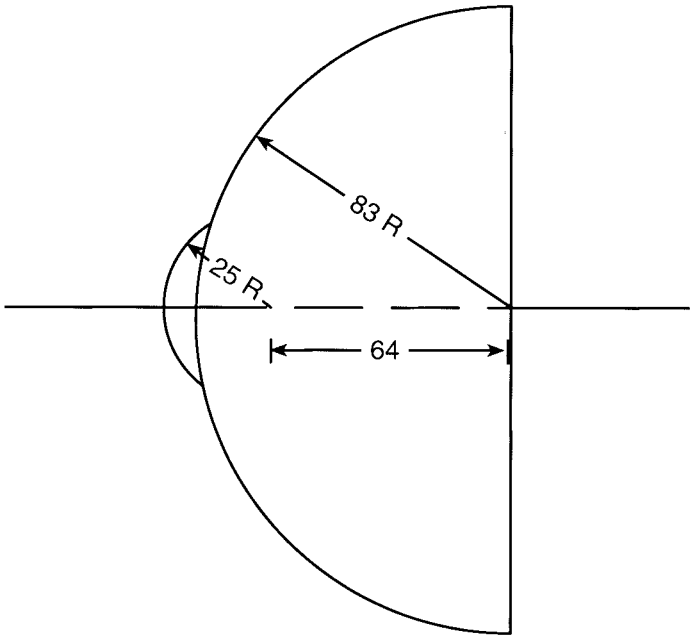

Figure 3
All dimensions in millimeters (mm)

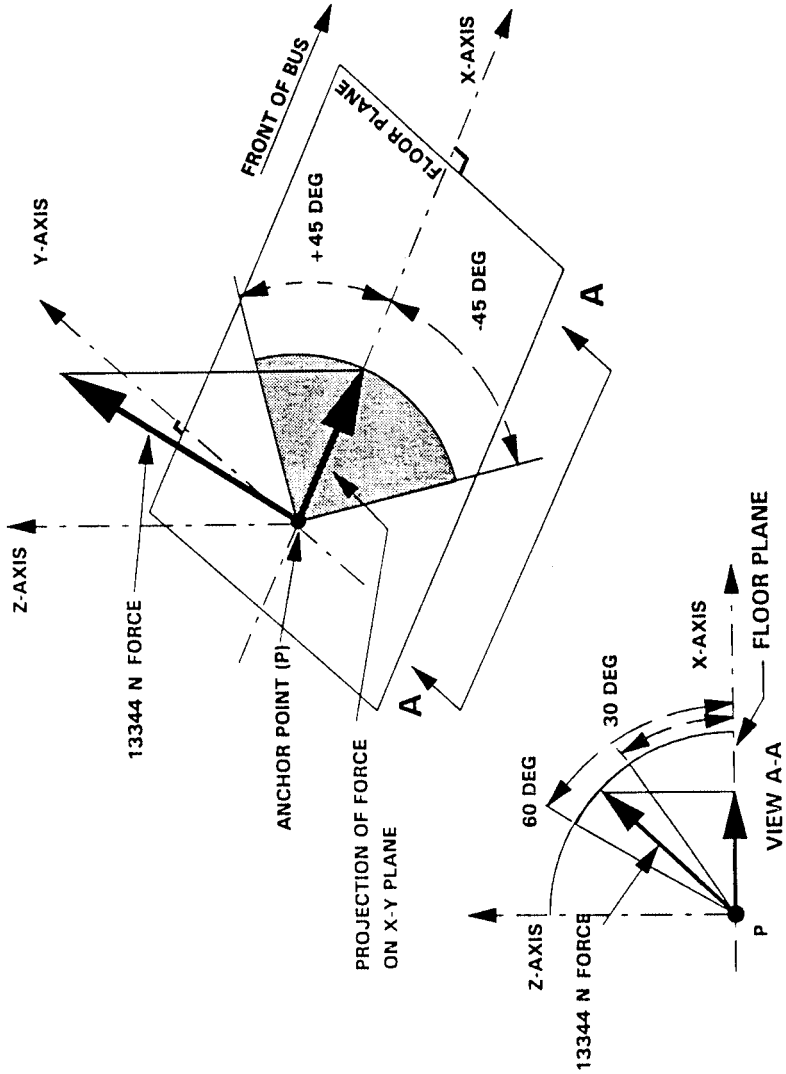

Figure 4. Wheelchair Securement Anchorage Loading Direction (Rear Anchorage Shown)

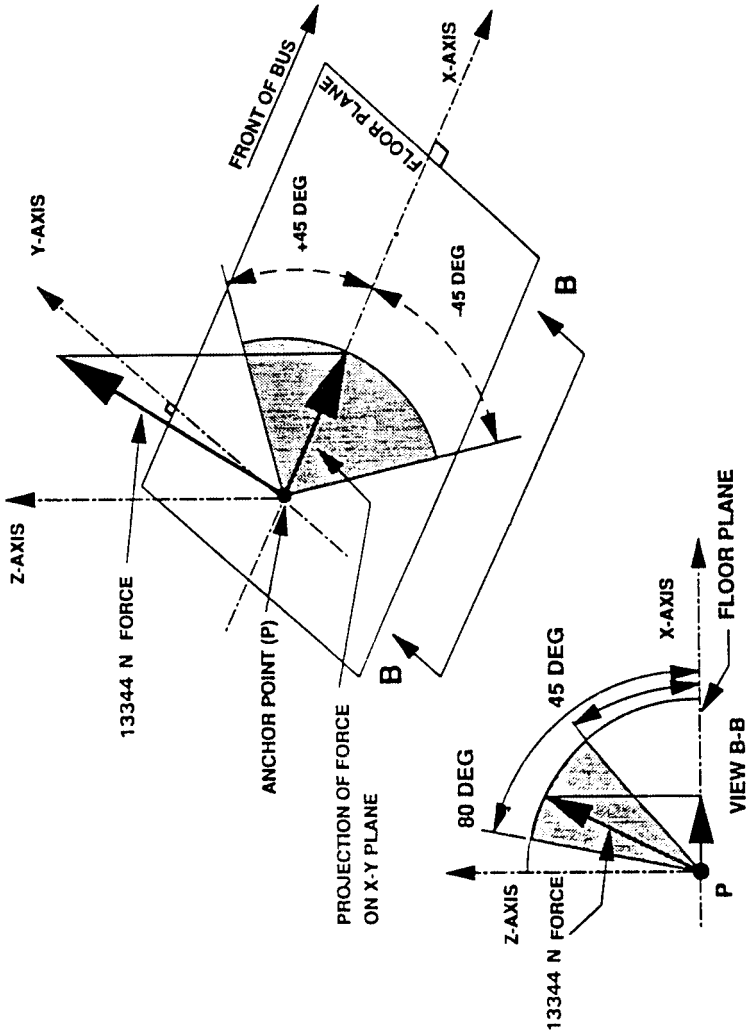

Figure 5. Pelvic Restraint Anchorage Loading Direction

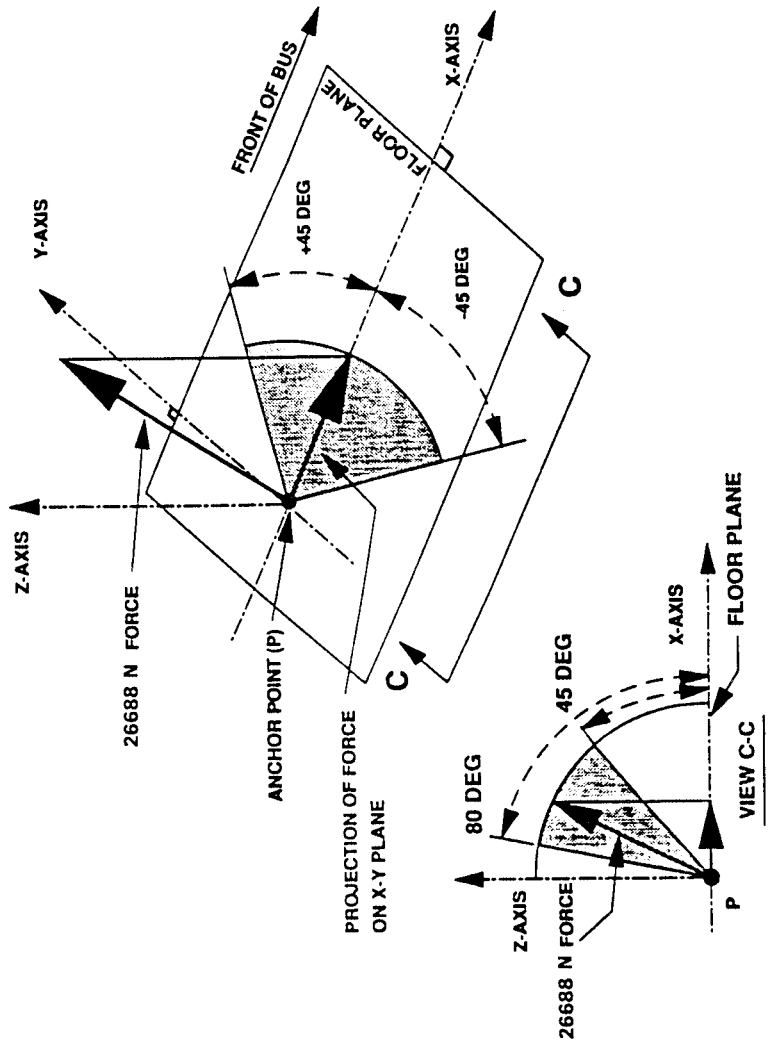

Figure 6. Pelvic Restraint and Wheelchair Securement Common Anchorage Loading Direction (Rear Direction Only)

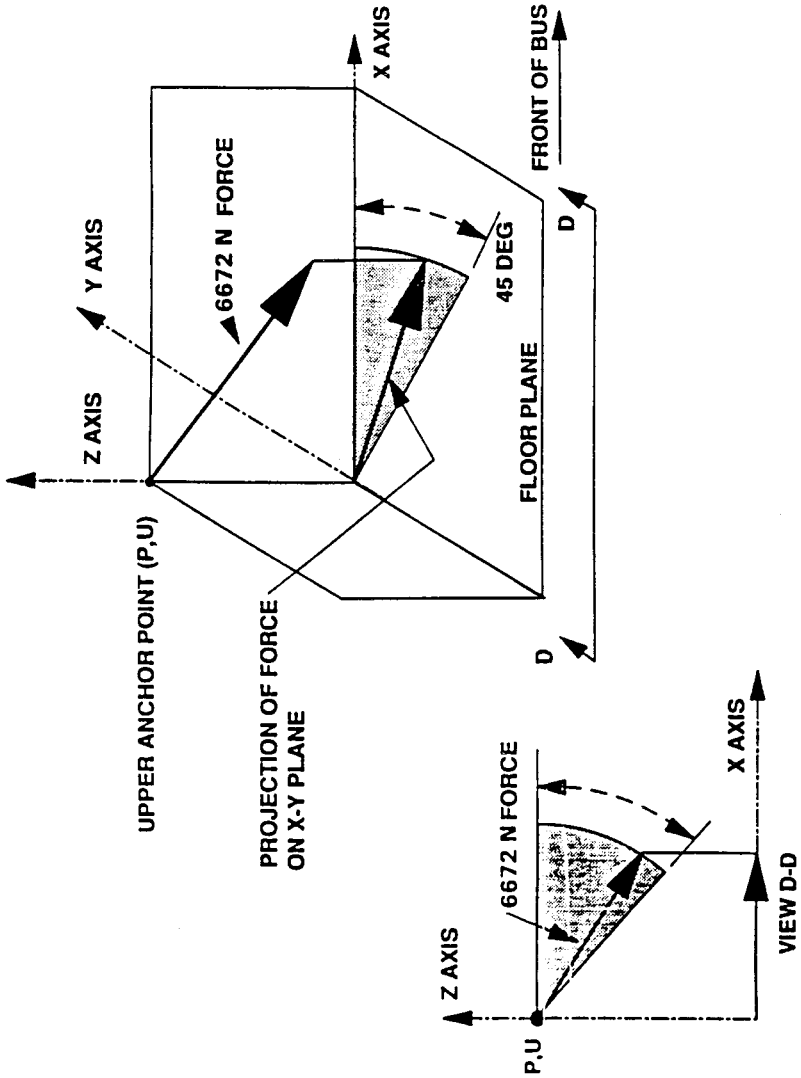

Figure 7. Upper Torso Restraint and Torso Harness Anchorage Loading Location

[41 FR 4018, Jan. 28, 1976, as amended at 41 FR 28528, July 12, 1976; 41 FR 36027, Aug. 26, 1976; 41 FR 54945, Dec. 16, 1976; 42 FR 64120, Dec. 22, 1977; 43 FR 9150, Mar. 6, 1978; 44 FR 18675, Mar. 29, 1979; 48 FR 12386, Mar. 24, 1983; 54 FR 46268, Nov. 2, 1989; 58 FR 4593, Jan. 15, 1993; 58 FR 46876, Sept. 3, 1993; 63 FR 28948, 28950, May 27, 1998]

§ 571.223 Standard No. 223; Rear impact guards.

S1. *Scope.* This standard specifies requirements for rear impact guards for trailers and semitrailers.

S2. *Purpose.* The purpose of this standard is to reduce the number of deaths and serious injuries that occur when light duty vehicles collide with

the rear end of trailers and semitrailers.

S3. *Application*. This standard applies to rear impact guards for trailers and semitrailers subject to Federal Motor Safety Standard No. 224, *Rear Impact Protection* (§ 571.224).

S4. *Definitions*.

In this standard, directional terms such as *bottom*, *center*, *height*, *horizontal*, *longitudinal*, *transverse*, and *rear* refer to directions relative to the vehicle orientation when the guard is oriented as if it were installed on a vehicle according to the installation instructions in S5.5 of this section.

Chassis means the load supporting frame structure of a motor vehicle.

Guard width means the maximum horizontal guard dimension that is perpendicular to the longitudinal vertical plane passing through the longitudinal centerline of the vehicle when the guard is installed on the vehicle according to the installation instructions in S5.5 of this section.

Horizontal member means the structural member of the guard that meets the configuration requirements of S5.1.1 through 5.1.3 of § 571.224, Rear Impact Protection, when the guard is installed on a vehicle according to the guard manufacturer's installation instructions.

Hydraulic guard means a guard designed to use fluid properties to provide resistance force to deformation.

Rear impact guard means a device installed on or near the rear of a vehicle so that when the vehicle is struck from the rear, the device limits the distance that the striking vehicle's front end slides under the rear end of the impacted vehicle.

Rigid test fixture means a supporting structure on which a rear impact guard can be mounted in the same manner it is mounted to a vehicle. The rigid test fixture is designed to resist the forces applied to the rear impact guard without significant deformation, such that a performance requirement of this standard must be met no matter how small an amount of energy is absorbed by the rigid test fixture.

S5. Requirements.

S5.1 *Projected Vertical Height*. The horizontal member of each guard, when viewed from the rear as it would be installed on a trailer pursuant to the installation instructions or procedures required by S5.5 of this standard, shall have a vertical height of at least 100 mm at each point across the guard width, when projected horizontally on a transverse vertical plane. Those installation instructions or procedures shall specify that the guard is to be mounted so that all portions of the horizontal member necessary to achieve a 100 mm high projected vertical height are located not more than 305 mm forward of the vehicle's rear extremity, as defined in S4 of 49 CFR 571.224, Rear Impact Protection. See Figure 1 of this section.

S5.2 *Strength and Energy Absorption*. When tested under the procedures of S6 of this section, each guard shall comply with the strength requirements of S5.2.1 of this section at each test location and the energy absorption requirements of S5.2.2 of this section at test location P3, as specified in S6.4 of this section. However, a particular guard (i.e., test specimen) need not be tested at more than one location.

S5.2.1 *Guard Strength*. The guard must resist the force levels specified in S5.2.1 (a) through (c) of this section without deflecting by more than 125 mm.

(a) A force of 50,000 N at test location P1 on either the left or the right side of the guard as defined in S6.4(a) of this section.

(b) A force of 50,000 N at test location P2 as defined in S6.4(b) of this section.

(c) A force of 100,000 N at test location P3 on either the left or the right side of the guard as defined in S6.4(c) of this section.

S5.2.2 *Guard Energy Absorption*. A guard, other than a hydraulic guard, shall absorb by plastic deformation within the first 125 mm of deflection at least 5,650 J of energy at each test location P3. See Figure 2 of this section.

S5.3 *Labeling*. Each guard shall be permanently labeled with the information specified in S5.3 (a) through (c) of this section. The information shall be in English and in letters that are at least 2.5 mm high. The label shall be placed on the forward-facing surface of the horizontal member of the guard, 305 mm inboard of the right end of the guard.

(a) The guard manufacturer's name and address.

(b) The statement: ''Manufactured in _____'' (inserting the month and year of guard manufacture).

(c) The letters ''DOT'', constituting a certification by the guard manufacturer that the guard conforms to all requirements of this standard.

S5.4 *Guard Attachment Hardware.* Each guard, other than a guard that is to be installed on a vehicle manufactured by the manufacturer of the guard, shall be accompanied by all attachment hardware necessary for installation of the guard on the chassis of the motor vehicle for which it is intended.

S5.5 *Installation Instructions.* The manufacturer of rear impact guards for sale to vehicle manufacturers shall include with each guard printed instructions in English for installing the guard, as well as a diagram or schematic depicting proper guard installation. The manufacturer of a rear impact guard for one of its own vehicles shall prepare and keep a copy of installation procedures applicable to each vehicle/guard combination for a period of one year from the date of vehicle manufacture and provide them to NHTSA on request. The instructions or procedures shall specify:

(a) Vehicles on which the guard can be installed. Vehicles may be designated by listing the make and model of the vehicles for which the guard is suitable, or by specifying the design elements that would make any vehicle an appropriate host for the particular guard (e.g., vehicles with frame rails of certain spacing and gauge of steel).

(b) A description of the chassis surface to which the guard will be attached, including frame design types with dimensions, material thickness, and tire track width. This description shall be detailed enough to permit the agency to locate and duplicate the chassis surface during compliance testing.

(c) An explanation of the method of attaching the guard to the chassis of each vehicle make and model listed or to the design elements specified in the instructions or procedures. The principal aspects of vehicle chassis configuration that are necessary to the proper functioning of the guard shall be specified. If the chassis strength is inadequate for the guard design, the instructions or procedures shall specify methods for adequately reinforcing the vehicle chassis. Procedures for properly installing any guard attachment hardware shall be provided.

S6. *Guard Test Procedures.* The procedures for determining compliance with S5.2 of this section are specified in S6.1 through S6.6 of this section.

S6.1 *Preparation of Hydraulic Guards.* For hydraulic guards, the horizontal member of the guard is deflected in a forward direction until the hydraulic unit(s) have reached the full extent of their designed travel or 610 mm, whichever occurs first. The hydraulic units are compressed before the application of force to the guard in accordance with S6.6 of this section and maintained in this condition throughout the testing under S6.6 of this section.

S6.2 *Guard Installation for Strength and Energy Absorption Tests.*

(a) The rear impact guard is attached to a test device.

(b) The test device for the compliance test will be whichever of the following devices, if either was used, the manufacturer used as a basis for its certification of the guard in S5.3(c) of this section. If the manufacturer did not use one of these devices or does not specify a device when asked by the agency, the agency may choose either of the following devices—

(1) A rigid test fixture. In the case of testing on a rigid test fixture NHTSA will consult the installation instructions or procedures to determine the surface or structure that the guard is supposed to be mounted to and mount it to the rigid test fixture in the same way.

(2) A complete trailer for which installation of the guard is suitable, as provided in the manufacturer's installation instructions or procedures required by S5.5 of this section. The trailer chassis is secured so that it behaves essentially as a fixed object during the test, such that the test must be passed no matter how little it moves during the test.

(c) The guard is attached in accordance with the instructions or procedures for guard attachment provided

by the guard manufacturer for that guard as required by S5.5 of this section.

S6.3 *Force Application Device.* The force application device employed in S6.6 of this section consists of a rectangular solid made of rigid steel. The steel solid is 203 mm in height, 203 mm in width, and 25 mm in thickness. The 203 mm by 203 mm face of the block is used as the contact surface for application of the forces specified in S5.2.1 (a) through (c) of this section. Each edge of the contact surface of the block has a radius of curvature of 5 mm plus or minus 1 mm.

S6.4 *Test Locations.* With the guard mounted to the rigid test fixture or to a complete trailer, determine the test locations P1, P2, and P3 in accordance with the procedure set forth in S6.4 (a) through (c) of this section. See Figure 1 of this section.

(a) Test location P1 is the point on the rearmost surface of the horizontal member of the guard that:

(1) Is located at a distance of ⅜ of the guard width from the vertical longitudinal plane passing through center of the guard;

(2) Lies on either side of the center of the guard's horizontal member; and

(3) Is 50 mm above the bottom of the guard.

(b) Test location P2 is the point on the rearmost surface of the horizontal member of the guard that:

(1) Lies in the longitudinal vertical plane passing through the center of the guard's horizontal member; and

(2) Is 50 mm above the bottom of the guard.

(c) Test location P3 is any point on the rearmost surface of the horizontal member of the guard that:

(1) Is not less than 355 mm and not more than 635 mm from the vertical longitudinal plane passing through center of the guard;

(2) Lies on either the right or left side of the horizontal member of the guard; and

(3) Is 50 mm above the bottom of the guard.

S6.5 *Positioning of Force Application Device.* Before applying any force to the guard, locate the force application device such that:

(a) The center point of the contact surface of the force application device is aligned with and touching the guard test location, as defined by the specifications of S6.4 of this section.

(b) The longitudinal axis of the force application device passes through the test location and is perpendicular to the transverse vertical plane that is tangent to the rearmost surface of the guard's horizontal member.

S6.6 *Force Application.* After the force application device has been positioned according to S6.5 of this section, apply the loads specified in S5.2.1 of this section. Load application procedures are specified in the S6.6 (a) through (d) of this section.

(a) Using the force application device, apply force to the guard in a forward direction such that the displacement rate of the force application device is the rate, plus or minus 10 percent, designated by the guard manufacturer within the range of 2.0 cm per minute to 9.0 cm per minute. If the guard manufacturer does not designate a rate, any rate within that range may be chosen.

(b) If conducting a strength test to satisfy the requirement of S5.2.1 of this section, the force is applied until the forces specified in S5.2.1 of this section have been exceeded, or until the displacement of the force application device has reached at least 125 mm, whichever occurs first.

(c) If conducting a test to be used for the calculation of energy absorption levels to satisfy the requirement of S5.2.2 of this section, apply the force to the guard until displacement of the force application device has reached 125 mm. For calculation of guard energy absorption, the value of force is recorded at least ten times per 25 mm of displacement of the contact surface of the loading device. Reduce the force until the guard no longer offers resistance to the force application device. Produce a force vs. deflection diagram of the type shown in Figure 2 of this section using this information. Determine the energy absorbed by the guard by calculating the shaded area bounded by the curve in the force vs. deflection diagram and the abscissa (X-axis).

(d) During each force application, the force application device is guided so

that it does not rotate. At all times during the application of force, the location of the longitudinal axis of the force application device remains constant.

FIGURE 1. PERFORMANCE REQUIREMENTS

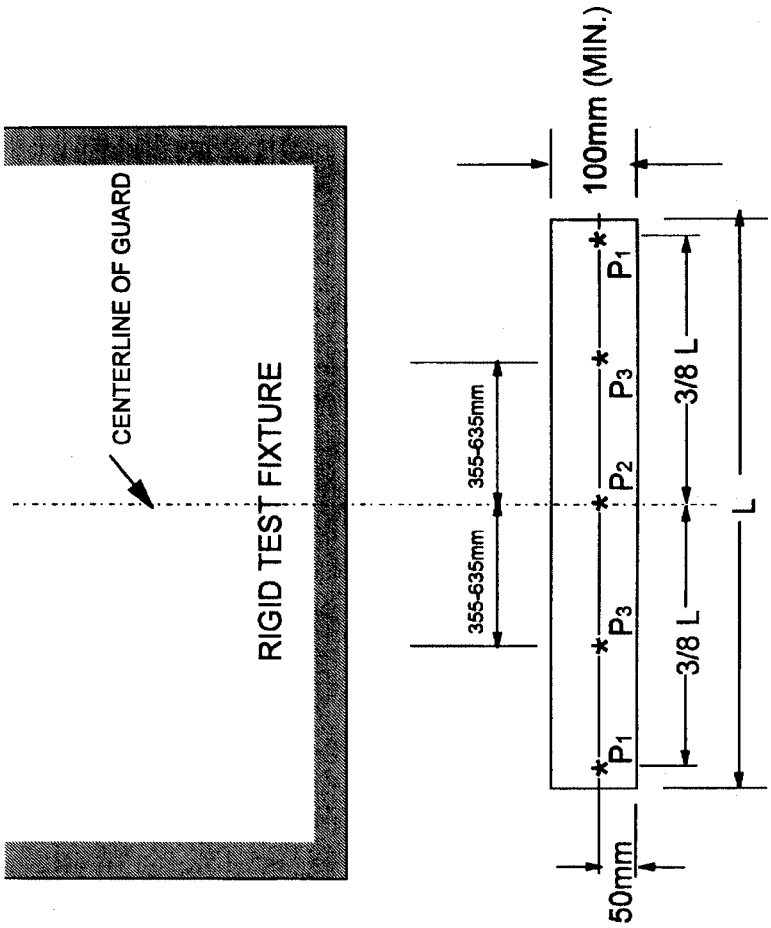

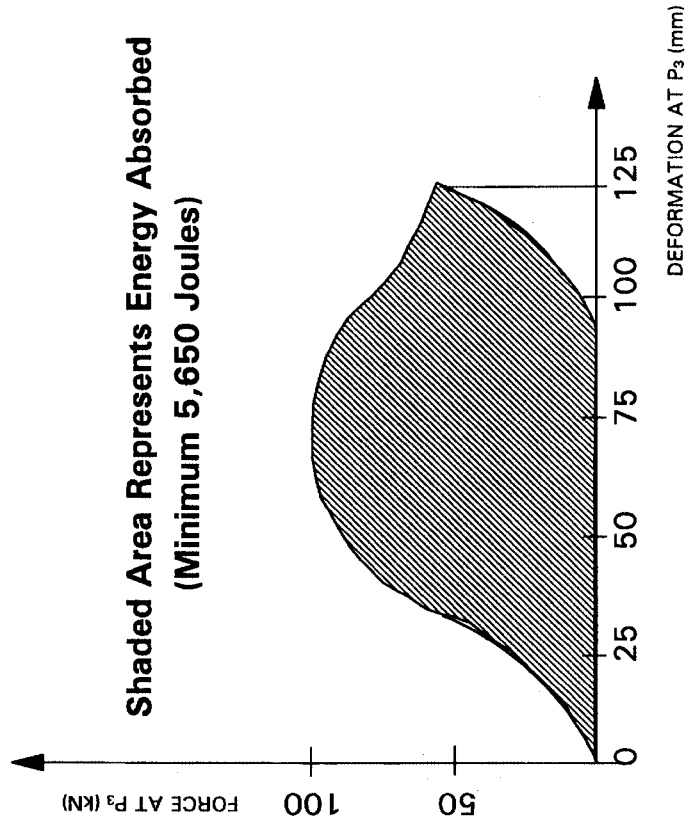

FIGURE 2. GUARD ENERGY ABSORPTION (TYPICAL FORCE-DEFLECTION CURVE AT P3)

[61 FR 2030, Jan. 24, 1996, as amended at 63 FR 3662, Jan. 26, 1998]

§ 571.224 Standard No. 224; Rear impact protection.

S1. *Scope.* This standard establishes requirements for the installation of rear impact guards on trailers and semitrailers with a gross vehicle weight rating (GVWR) of 4,536 kg or more.

S2. *Purpose.* The purpose of this standard is to reduce the number of deaths and serious injuries occurring when light duty vehicles impact the rear of trailers and semitrailers with a GVWR of 4,536 kg or more.

S3. *Application.* This standard applies to trailers and semitrailers with a GVWR of 4,536 kg or more. The standard does not apply to pole trailers, pulpwood trailers, special purpose vehicles, wheels back vehicles, or temporary living quarters as defined in 49 CFR 529.2. If a cargo tank motor vehicle, as defined in 49 CFR 171.8, is certified to carry hazardous materials and has a rear bumper or rear end protection device conforming with 49 CFR part 178 located in the area of the horizontal member of the rear underride guard required by this standard, the guard need not comply with the energy absorption requirement (S5.2.2) of 49 CFR 571.223.

S4. *Definitions.*

Chassis means the load supporting frame structure of a motor vehicle.

Horizontal member means the structural member of the guard that meets the configuration requirements of S5.1 of this section when the guard is installed on the vehicle according to the

installation instructions or procedures required by S5.5 of §571.223, Rear Impact Guards.

Low chassis vehicle means a trailer or semitrailer having a chassis that extends behind the rearmost point of the rearmost tires and a lower rear surface that meets the configuration requirements of S5.1.1 through 5.1.3 of this section.

Outer or *Outboard* means away from the trailer centerline and toward the side extremities of the trailer.

Pulpwood trailer means a trailer that is designed exclusively for harvesting logs or pulpwood and constructed with a skeletal frame with no means for attachment of a solid bed, body, or container.

Rear extremity means the rearmost point on a vehicle that is above a horizontal plane located 560 mm above the ground and below a horizontal plane located 1,900 mm above the ground when the vehicle is configured as specified in S5.1 of this section and when the vehicle's cargo doors, tailgate, or other permanent structures are positioned as they normally are when the vehicle is in motion. Nonstructural protrusions such as taillights, rubber bumpers, hinges and latches are excluded from the determination of the rearmost point.

Rounded corner means a guard's outermost end that curves upward or forward toward the front of the vehicle, or both.

Side extremity means the outermost point on a vehicle's side that is located above a horizontal plane 560 mm above the ground, below a horizontal plane located 190 cm above the ground, and between a transverse vertical plane tangent to the rear extremity of the vehicle and a transverse vertical plane located 305 mm forward of that plane when the vehicle is configured as specified in S5.1 of this section. Non-structural protrusions such as taillights, hinges, rubber bumpers, and latches are excluded from the determination of the outermost point.

Special purpose vehicle means a trailer or semitrailer having work-performing equipment that, while the vehicle is in transit, resides in or moves through the area that could be occupied by the horizontal member of the rear underride guard, as defined by S5.1.1 through S5.1.3.

Wheels back vehicle means a trailer or semitrailer whose rearmost axle is permanently fixed and is located such that the rearmost surface of tires of the size recommended by the vehicle manufacturer for the vehicle on that axle is not more than 305 mm forward of the transverse vertical plane tangent to the rear extremity of the vehicle.

S5. *Requirements.*

S5.1 *Installation; vehicle configuration.* Each vehicle shall be equipped with a rear impact guard certified as meeting Federal Motor Vehicle Safety Standard No. 223, *Rear Impact Guards* (§571.223). When the vehicle to which the guard is attached is resting on level ground, unloaded, with its full capacity of fuel, and with its tires inflated and air suspension, if so equipped, pressurized in accordance with the manufacturer's recommendations, the guard shall comply with the requirements of S5.1.1 through S5.1.3 of this section. See Figure 1 of this section.

S5.1.1 *Guard width.* The outermost surfaces of the horizontal member of the guard shall extend outboard to within 100 mm of the longitudinal vertical planes that are tangent to the side extremities of the vehicle, but shall not extend outboard of those planes. See Figure 1 of this section.

S5.1.2 *Guard height.* The vertical distance between the bottom edge of the horizontal member of the guard and the ground shall not exceed 560 mm at any point across the full width of the member. Notwithstanding this requirement, guards with rounded corners may curve upward within 255 mm of the longitudinal vertical planes that are tangent to the side extremities of the vehicle. See Figure 1 of this section.

S5.1.3 *Guard rear surface.* At any height 560 mm or more above the ground, the rearmost surface of the horizontal member of the guard shall be located as close as practical to a transverse vertical plane tangent to the rear extremity of the vehicle, but no more than 305 mm forward of that plane. Notwithstanding this requirement, the horizontal member may extend rearward of the plane, and guards

with rounded corners may curve forward within 255 mm of the longitudinal vertical planes that are tangent to the side extremities of the vehicle.

S5.2 *Installation Requirements.* Guards shall be attached to the vehicle's chassis by the vehicle manufacturer in accordance with the installation instructions or procedures provided pursuant to S5.5 of Standard No. 223, *Rear Impact Guards* (§ 571.223). The vehicle must be of a type identified in the installation instructions as appropriate for the guard.

FIGURE 1. CONFIGURATION REQUIREMENTS

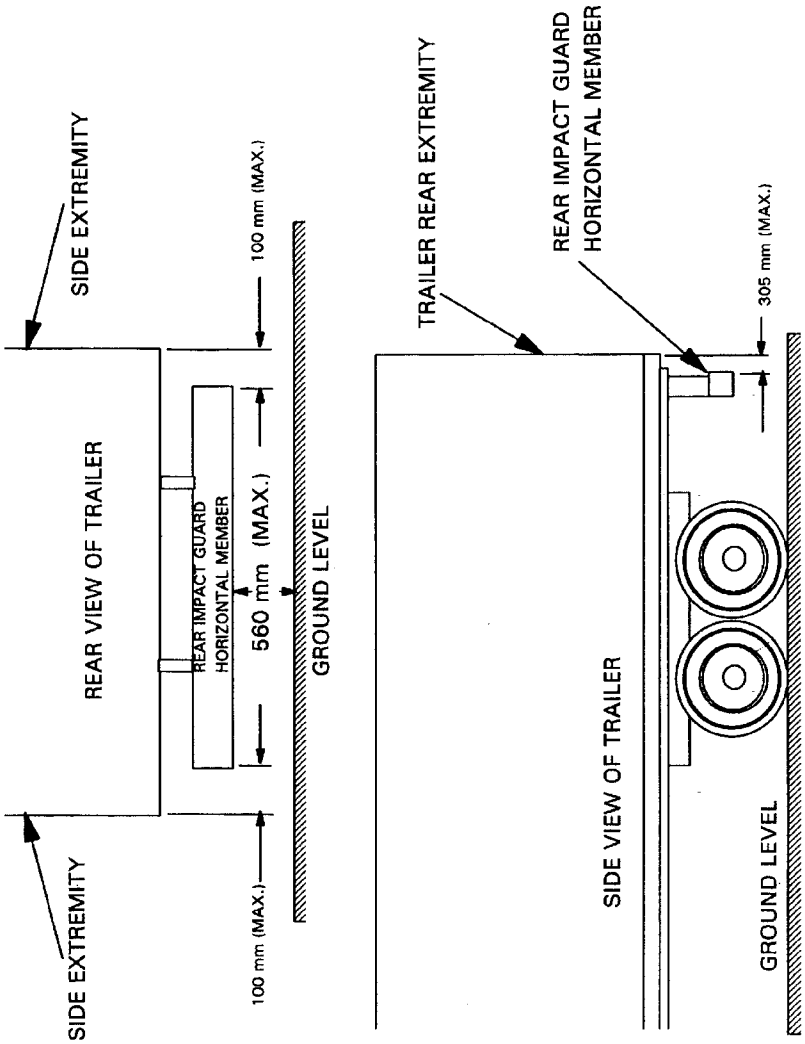

[61 FR 2035, Jan. 24, 1996, as amended at 63 FR 3662, Jan. 26, 1998]

§571.225 Standard No. 225; Child restraint anchorage systems.

S1. *Purpose and scope*. This standard establishes requirements for child restraint anchorage systems to ensure their proper location and strength for the effective securing of child restraints, to reduce the likelihood of the anchorage systems' failure, and to increase the likelihood that child restraints are properly secured and thus more fully achieve their potential effectiveness in motor vehicles.

S2. *Application*. This standard applies to passenger cars; to trucks and multipurpose passenger vehicles with a gross vehicle weight rating (GVWR) of 3,855 kilograms (8,500 pounds) or less, except walk-in van-type vehicles and vehicles manufactured to be sold exclusively to the U.S. Postal Service; and to buses (including school buses) with a GVWR of 4,536 kg (10,000 lb) or less, except shuttle buses.

S3. *Definitions*.

Child restraint anchorage means any vehicle component, other than Type I or Type II seat belts, that is involved in transferring loads generated by a child restraint system to the vehicle structure.

Child restraint anchorage system means a vehicle system that is designed for attaching a child restraint system to a vehicle at a particular designated seating position, consisting of:

(a) Two lower anchorages meeting the requirements of S9; and

(b) A tether anchorage meeting the requirements of S6.

Child restraint fixture (CRF) means the fixture depicted in Figures 1 and 2 of this standard that simulates the dimensions of a child restraint system, and that is used to determine the space required by the child restraint system and the location and accessibility of the lower anchorages.

Rear designated seating position means any designated seating position (as that term is defined at §571.3) that is rearward of the front seats(s).

Seat bight means the area close to and including the intersection of the surfaces of the vehicle seat cushion and the seat back.

SFAD 1 means Static Force Application Device 1 shown in Figures 12 to 16 of this standard.

SFAD 2 means Static Force Application Device 2 shown in Figures 17 and 18 of this standard.

Shuttle bus means a bus with only one row of forward-facing seating positions rearward of the driver's seat.

Tether anchorage means a user-ready, permanently installed vehicle system that transfers loads from a tether strap through the tether hook to the vehicle structure and that accepts a tether hook.

Tether strap means a strap that is secured to the rigid structure of the seat back of a child restraint system, and is connected to a tether hook that transfers the load from that system to the tether anchorage.

Tether hook means a device, illustrated in Figure 11 of Standard No. 213 (§571.213), used to attach a tether strap to a tether anchorage.

S4. *General vehicle requirements*.

S4.1 Each tether anchorage and each child restraint anchorage system installed, either voluntarily or pursuant to this standard, in any new vehicle manufactured on or after September 1, 1999, shall comply with the configuration, location, marking and strength requirements of this standard. The vehicle shall be delivered with written information, in English, on how to appropriately use those anchorages and systems.

S4.2 For passenger cars manufactured on or after September 1, 1999 and before September 1, 2000, not less than 80 percent of the manufacturer's average annual production of vehicles (not including convertibles), as set forth in S13, shall be equipped with a tether anchorage as specified in paragraphs (a), (b) and (c) of S4.2, except as provided in S5.

(a) Each vehicle with three or more forward-facing rear designated seating positions shall be equipped with a tether anchorage conforming to the requirements of S6 at no fewer than three forward-facing rear designated

seating positions. The tether anchorage of a child restraint anchorage system may count towards the three required tether anchorages. In each vehicle with a forward-facing rear designated seating position other than an outboard designated seating position, at least one tether anchorage (with or without the lower anchorages of a child restraint anchorage system) shall be at such a designated seating position. In a vehicle with three or more rows of seating positions, at least one of the tether anchorages (with or without the lower anchorages of a child restraint anchorage system) shall be installed at a forward-facing seating position in the second row if such a forward-facing seating position is available in that row.

(b) Each vehicle with not more than two forward-facing rear designated seating positions shall be equipped with a tether anchorage conforming to the requirements of S6 at each forward-facing rear designated seating position. The tether anchorage of a child restraint anchorage system may count toward the required tether anchorages.

(c) Each vehicle without any forward-facing rear designated seating position shall be equipped with a tether anchorage conforming to the requirements of S6 at each front forward-facing passenger seating position.

S4.3 Each vehicle manufactured on or after September 1, 2000 and before September 1, 2002, shall be equipped as specified in paragraphs (a) and (b) of S4.3, except as provided in S5.

(a) A specified percentage of each manufacturer's yearly production, as set forth in S14, shall be equipped as follows:

(1) Each vehicle with three or more forward-facing rear designated seating positions shall be equipped with a child restraint anchorage system conforming to the requirements of S9 at not fewer than two forward-facing rear designated seating positions. In a vehicle with three or more rows of seating positions, at least one of the child restraint anchorage systems shall be at a forward-facing seating position in the second row if such a forward-facing seating position is available in that row.

(2) Each vehicle with not more than two forward-facing rear designated seating positions shall be equipped with a child restraint anchorage system conforming to the requirements of S9 at each forward-facing rear designated seating position.

(b) Each vehicle, including a vehicle that is counted toward the percentage of a manufacturer's yearly production required to be equipped with child restraint anchorage systems, shall be equipped as described in S4.3(b)(1), (2) or (3).

(1) Each vehicle with three or more forward-facing rear designated seating positions shall be equipped with a tether anchorage conforming to the requirements of S6 at no fewer than three forward-facing rear designated seating positions. The tether anchorage of a child restraint anchorage system may count towards the three required tether anchorages. In each vehicle with a forward-facing rear designated seating position other than an outboard designated seating position, at least one tether anchorage (with or without the lower anchorages of a child restraint anchorage system) shall be at such a designated seating position. In a vehicle with three or more rows of seating positions, at least one of the tether anchorages (with or without the lower anchorages of a child restraint anchorage system) shall be installed at a forward-facing seating position in the second row if such a forward-facing seating position is available in that row.

(2) Each vehicle with not more than two forward-facing rear designated seating positions shall be equipped with a tether anchorage conforming to the requirements of S6 at each forward-facing rear designated seating position. The tether anchorage of a child restraint anchorage system may count toward the required tether anchorages.

(3) Each vehicle without any forward-facing rear designated seating position shall be equipped with a tether anchorage conforming to the requirements of S6 at each front passenger seating position.

S4.4 Vehicles manufactured on or after September 1, 2002 shall be equipped as specified in paragraphs (a)

through (c) of S4.4, except as provided in S5.

(a) Each vehicle with three or more forward-facing rear designated seating positions shall be equipped as specified in S4.4(a)(1) and (2).

(1) Each vehicle shall be equipped with a child restraint anchorage system conforming to the requirements of S9 at not fewer than two forward-facing rear designated seating positions. At least one of the child restraint anchorage systems shall be installed at a forward-facing seating position in the second row in each vehicle that has three or more rows, if such a forward-facing seating position is available in that row.

(2) Each vehicle shall be equipped with a tether anchorage conforming to the requirements of S6 at a third forward-facing rear designated seating position. The tether anchorage of a child restraint anchorage system may count towards the third required tether anchorage. In each vehicle with a forward-facing rear designated seating position other than an outboard designated seating position, at least one tether anchorage (with or without the lower anchorages of a child restraint anchorage system) shall be at such a designated seating position.

(b) Each vehicle with not more than two forward-facing rear designated seating positions shall be equipped with a child restraint anchorage system conforming to the requirements of S9 at each forward-facing rear designated seating position.

(c) Each vehicle without any forward-facing rear designated seating position shall be equipped with a tether anchorage conforming to the requirements of S6 at each front forward-facing passenger seating position.

S4.5 As an alternative to complying with the requirements of S4.2 through S4.4 that specify the number of tether anchorages that are required in a vehicle and the designated seating positions for which tether anchorages must be provided, a vehicle manufactured from September 1, 1999 to August 31, 2004 may, at the manufacturer's option (with said option irrevocably selected prior to, or at the time of, certification of the vehicle), meet the requirements of this S4.5. This alternative ceases to be available on and after September 1, 2004. A tether anchorage conforming to the requirements of S6 must be installed—

(a) For each designated seating position, other than that of the driver, in a vehicle that has only one row of designated seating positions;

(b) For each forward-facing designated seating position in the second row of seating positions in a passenger car or truck;

(c) For each of any two forward-facing designated seating positions in the second row of seating positions in a multipurpose passenger vehicle that has five or fewer designated seating positions; and,

(d) For each of any three forward-facing designated seating positions that are located to the rear of the first row of designated seating positions in a multipurpose passenger vehicle that has six or more designated seating positions.

S5. *General exceptions.*

(a) Convertibles and school buses are excluded from the requirements to be equipped with tether anchorages.

(b) A vehicle may be equipped with a built-in child restraint system conforming to the requirements of Standard No. 213 (49 CFR 571.213) instead of one of the required tether anchorages or child restraint anchorage systems.

(c)(1) Each vehicle that—

(i) Does not have a rear designated seating position and that thus meets the conditions in S4.5.4.1(a) of Standard No. 208 (§571.208); and

(ii) Has an air bag on-off switch meeting the requirements of S4.5.4 of Standard No. 208 (§571.208), shall have a child restraint anchorage system for a designated passenger seating position in the front seat, instead of only a tether anchorage. In the case of convertibles, the front designated passenger seating position need have only the two lower anchorages meeting the requirements of S9 of this standard.

(iii) For vehicles manufactured on or after September 1, 2002, each vehicle that does not have a rear designated seating position, and does not have an air bag installed at front passenger designated seating positions pursuant to a temporary exemption granted by NHTSA under 49 CFR Part 555, must

have a child restraint anchorage system installed at a front passenger designated seating position. In the case of convertibles, the front designated passenger seating position need have only the two lower anchorages meeting the requirements of S9 of this standard.

(2) Each vehicle that—

(i) Has a rear designated seating position and meets the conditions in S4.5.4.1(b) of Standard No. 208 (§ 571.208); and,

(ii) Has an air bag on-off switch meeting the requirements of S4.5.4 of Standard 208 (§ 571.208), shall have a child restraint anchorage system for a designated passenger seating position in the front seat, instead of a child restraint anchorage system that is required for the rear seat. In the case of convertibles, the front designated passenger seating position need have only the two lower anchorages meeting the requirements of S9 of this standard.

(iii) For vehicles manufactured on or after September 1, 2002, each vehicle that has a rear designated seating position and meets the conditions in S4.5.4.1(b) of Standard No. 208 (§ 571.208), and does not have an air bag installed at front passenger designated seating positions pursuant to a temporary exemption granted by NHTSA under 49 CFR Part 555, must have a child restraint anchorage system installed at a front passenger designated seating position in place of one of the child restraint anchorage systems that is required for the rear seat. In the case of convertibles, the front designated passenger seating position need have only the two lower anchorages meeting the requirements of S9 of this standard.

(d) A vehicle that does not have an air bag on-off switch meeting the requirements of S4.5.4 of Standard No. 208 (§ 571.208), shall not have any child restraint anchorage system installed at a front designated seating position.

(e) A vehicle with a rear designated seating position for which interference with transmission and/or suspension components prevents the location of the lower bars of a child restraint anchorage system anywhere within the zone described by S9.2 or S15.1.2.2(b) such that the attitude angles of S15.1.2.2(a) could be met, is excluded from the requirement to provide a child restraint anchorage system at that position. However, except as provided elsewhere in S5 of this standard, for vehicles manufactured on or after September 1, 2001, such a vehicle must have a tether anchorage at a front passenger designated seating position.

S6. *Requirements for tether anchorages.*

S6.1 *Configuration of the tether anchorage.* Each tether anchorage shall:

(a) Permit the attachment of a tether hook of a child restraint system meeting the configuration and geometry specified in Figure 11 of Standard No. 213 (§ 571.213);

(b) Be accessible without the need for any tools other than a screwdriver or coin;

(c) Once accessed, be ready for use without the need for any tools; and

(d) Be sealed to prevent the entry of exhaust fumes into the passenger compartment.

S6.2 *Location of the tether anchorage.* A vehicle manufactured on or after September 1, 1999 and before September 1, 2004 may, at the manufacturer's option (with said option irrevocably selected prior to, or at the time of, certification of the vehicle), meet the requirements of S6.2.1 or S6.2.2. Vehicles manufactured on or after September 1, 2004 must meet the requirements of S6.2.1 of this standard.

S6.2.1 Subject to S6.2.1.1 and S6.2.1.2, the part of each tether anchorage that attaches to a tether hook must be located within the shaded zone shown in Figures 3 to 7 of this standard of the designated seating position for which it is installed. The zone is defined with reference to the seating reference point (see § 571.3). (For purposes of the figures, ''H Point'' is defined to mean seating reference point.)

S6.2.1.1 In the case of passenger cars and multipurpose passenger vehicles manufactured before September 1, 2004, the part of each user-ready tether anchorage that attaches to a tether hook may, at the manufacturer's option (with said option selected prior to, or at the time of, certification of the vehicle), instead of complying with S6.2.1, be located within the shaded zone shown in Figures 8 to 11 of this standard of the designated seating position for which it is installed, relative to the

shoulder reference point of the three dimensional H-point machine described in section 3.1 of SAE Standard J826 (June 1992), (incorporation by reference; see §571.5), such that—

(a) The H-point of the three dimensional H-point machine is located—

(1) At the actual H-point of the seat, as defined in section 2.2.11.3 of SAE Recommended Practice J1100 (June 1993), (incorporation by reference; see §571.5), at the full rearward and downward position of the seat; or

(2) In the case of a designated seating position that has a child restraint anchorage system, midway between vertical longitudinal planes passing through the lateral center of the bar in each of the two lower anchorages of that system; and

(b) The back pan of the H-point machine is at the same angle to the vertical as the vehicle seat back with the seat adjusted to its full rearward and full downward position and the seat back in its most upright position.

S6.2.1.2 In the case of a vehicle that—

(a) Has a user-ready tether anchorage for which no part of the shaded zone shown in Figures 3 to 7 of this standard of the designated seating position for which the anchorage is installed is accessible without removing a seating component of the vehicle; and

(b) Has a tether strap routing device that is—

(1) Not less than 65 mm behind the torso line for that seating position, in the case of a flexible routing device or a deployable routing device, measured horizontally and in a vertical longitudinal plane; or

(2) Not less than 100 mm behind the torso line for that seating position, in the case of a fixed rigid routing device, measured horizontally and in a vertical longitudinal plane, the part of that anchorage that attaches to a tether hook may, at the manufacturer's option (with said option selected prior to, or at the time of, certification of the vehicle) be located outside that zone.

S6.2.2 Subject to S6.2.2.1 and S6.2.2.2, the portion of each user-ready tether anchorage that is designed to bind with a tether strap hook shall be located within the shaded zone shown in Figures 3 to 7 of this standard of the designated seating position for which it is installed, with reference to the H-point of a template described in section 3.1 of SAE Standard J826 (June 1992) (incorporation by reference; see §571.5), if:

(a) The H-point of the template is located—

(1) At the unique Design H-point of the designated seating position, as defined in section 2.2.11.1 of SAE Recommended Practice J1100 (June 1993) (incorporation by reference; see §571.5), at the full downward and full rearward position of the seat, or—

(2) In the case of a designated seating position that has a means of affixing the lower portion of a child restraint system to the vehicle, other than a vehicle seat belt, midway between the two lower restraint system anchorages;

(b) The torso line of the template is at the same angle to the transverse vertical plane as the vehicle seat back with the seat adjusted to its full rearward and full downward position and the seat back in its most upright position; and

(c) The template is positioned in the vertical longitudinal plane that contains the H-point of the template.

S6.2.2.1 In passenger cars and multipurpose passenger vehicles manufactured before September 1, 2004, the portion of each user-ready tether anchorage to which a tether strap hook attaches may be located within the shaded zone shown in Figures 8 to 11 of the designated seating position for which it is installed, with reference to the shoulder reference point of a template described in section 3.1 of SAE Standard J826 (June 1992) (incorporation by reference; see §571.5), if:

(a) The H-point of the template is located—

(1) At the unique Design H-point of the designated seating position, as defined in section 2.2.11.1 of SAE Recommended Practice J1100 (June 1993) (incorporation by reference; see §571.5), at the full downward and full rearward position of the seat, or—

(2) In the case of a designated seating position that has a means of affixing the lower portion of a child restraint

system to the vehicle, other than a vehicle seat belt, midway between the two lower restraint system anchorages;

(b) The torso line of the template is at the same angle to the vertical plane as the vehicle seat back with the seat adjusted to its full rearward and full downward position and the seat back in its most upright position; and

(c) The template is positioned in the vertical longitudinal plane that contains the H-point of the template.

S6.2.2.2 The portion of a user-ready tether anchorage in a vehicle that is designed to bind with the tether strap hook may be located outside the shaded zone referred to in S6.2.2, if no part of the shaded zone is accessible without removing a seating component of the vehicle and the vehicle is equipped with a routing device that—

(a) Ensures that the tether strap functions as if the portion of the anchorage designed to bind with the tether strap hook were located within the shaded zone;

(b) Is at least 65 mm behind the torso line, in the case of a non-rigid-webbing-type routing device or a deployable routing device, or at least 100 mm behind the torso line, in the case of a fixed rigid routing device; and

(c) When tested after being installed as it is intended to be used, is of sufficient strength to withstand, with the user-ready tether anchorage, the load referred to in S6.3.4 or S6.3.4.1, as applicable.

S6.3 *Strength requirements for tether anchorages*. Subject to S6.3.2, a vehicle manufactured on or after September 1, 1999, and before September 1, 2004 may, at the manufacturer's option (with said option irrevocably selected prior to, or at the time of, certification of the vehicle), meet the requirements of S6.3.1 or S6.3.4. Subject to S6.3.2, vehicles manufactured on or after September 1, 2004 must meet the requirements of S6.3.1 of this standard.

S6.3.1 Subject to S6.3.2, when tested in accordance with S8, after preloading the device with a force of 500 N, point X of the SFAD must not be displaced horizontally more than 125 mm during the application of the force.

S6.3.2 In vehicles manufactured before September 1, 2004, each user-ready tether anchorage in a row of designated seating positions in a passenger car may, at the manufacturer's option (with said option selected prior to, or at the time of, certification of the vehicle), instead of complying with S6.3.1, withstand the application of a force of 5,300 N, when tested in accordance with S8.2, such that the anchorage does not release the belt strap specified in S8.2 or allow any point on the tether anchorage to be displaced more than 125 mm.

S6.3.3 *Provisions for simultaneous and sequential testing*. (a) In the case of vehicle seat assemblies equipped with more than one tether anchorage system, the force referred to in S6.3.1 and S6.3.2 may, at the agency's option, be applied simultaneously to each of those tether anchorages. However, that force may not be applied simultaneously to tether anchorages for any two adjacent seating positions whose midpoints are less than 400 mm apart, as measured in accordance with S6.3.3(a)(1) and (2) and Figure 20.

(1) The midpoint of the seating position lies in the vertical longitudinal plane that is equidistant from vertical longitudinal planes through the geometric center of each of the two lower anchorages at the seating position.

(2) Measure the distance between the vertical longitudinal planes passing through the midpoints of the adjacent seating positions, as measured along a line perpendicular to the planes.

(b) A tether anchorage of a particular child restraint anchorage system will not be tested with the lower anchorages of that anchorage system if one or both of those lower anchorages have been previously tested under this standard.

S6.3.4 Subject to subsections S6.3.4.1 and S6.3.4.2, every user-ready tether anchorage in a row of designated seating positions shall, when tested, withstand the application of a force of 10,000 N—

(a) Applied by means of one of the following types of test devices, installed as a child restraint system would be installed in accordance with the manufacturer's installation instructions, namely,

(1) SFAD 1, to test a tether anchorage at a designated seating position

that does not have a child restraint anchorage system; or

(2) SFAD 2, to test a tether anchorage at a designated seating position that has a child restraint anchorage system;

(b) Applied—

(1) In a forward direction parallel to the vehicle's vertical longitudinal plane through the X point on the test device, and,

(2) Initially, along a horizontal line or along any line below or above that line that is at an angle to that line of not more than 5 degrees;

(c) Approximately linearly over a time, at the option of the vehicle manufacturer, of not more than 30 seconds, at any onset force rate of not more than 135 000 N/s; and

(d) Maintained at a 10,000 N level for one second.

S6.3.4.1 In a passenger car manufactured before September 1, 2004, every user-ready tether anchorage in a row of designated seating positions must, when tested, subject to subsection S6.3.4.2, withstand the application of a force of 5,300 N, which force must be—

(a) Applied by means of a belt strap that—

(1) Extends not less than 250 mm forward from the vertical plane touching the rear top edge of the vehicle seat back,

(2) Is fitted at one end with suitable hardware for applying the force and at the other end with a bracket for the attachment of the user-ready tether anchorage, and

(3) Passes over the top of the vehicle seat back as shown in Figure 19 of this standard;

(b) Applied—

(1) In a forward direction parallel to the vehicle's longitudinal vertical plane, and

(2) Initially, along a horizontal line or along any line below that line that is at an angle to that line of not more than 20 degrees;

(c) Attained within 30 seconds, at any onset force rate of not more than 135,000 N/s; and

(d) Maintained at a 5,300 N level for one second.

S6.3.4.2 If the zones in which tether anchorages are located overlap and if, in the overlap area, a user-ready tether anchorage is installed that is designed to accept the tether strap hooks of two restraint systems simultaneously, both portions of the tether anchorage that are designed to bind with a tether strap hook shall withstand the force referred to in subsection S6.3.4 or S6.3.4.1, as the case may be, applied to both portions simultaneously.

S6.3.4.3 *Provisions for simultaneous and sequential testing.* (a) In the case of vehicle seat assemblies equipped with more than one tether anchorage system, the force referred to in S6.3.4, 6.3.4.1 or S6.3.4.2 may, at the agency's option, be applied simultaneously to each of those tether anchorages. However, that force may not be applied simultaneously to tether anchorages for any two adjacent seating positions whose midpoints are less than 400 mm apart, as measured in accordance with S6.3.4.3(a)(1) and (2) and Figure 20.

(1) The midpoint of the seating position lies in the vertical longitudinal plane that is equidistant from vertical longitudinal planes through the geometric center of each of the two lower anchorages at the seating position.

(2) Measure the distance between the vertical longitudinal planes passing through the midpoints of the adjacent seating positions, as measured along a line perpendicular to the planes.

(b) A tether anchorage of a particular child restraint anchorage system will not be tested with the lower anchorages of that anchorage system if one or both of those lower anchorages have been previously tested under this standard.

S6.3.4.4 The strength requirement tests shall be conducted with the vehicle seat adjusted to its full rearward and full downward position and the seat back in its most upright position. When SFAD 2 is used in testing and cannot be attached to the lower anchorages with the seat back in this position, adjust the seat back as recommended by the manufacturer in its instructions for attaching child restraints. If no instructions are provided, adjust the seat back to the position that enables SFAD 2 to attach to the lower anchorages that is the closest to the most upright position.

S7. *Test conditions for testing tether anchorages.*

The test conditions described in paragraphs (a) and (b) of S7 apply to the test procedures in S8.

(a) Vehicle seats are adjusted to their full rearward and full downward position and the seat back is placed in its most upright position. When SFAD 2 is used in testing and cannot be attached to the lower anchorages with the seat back in this position, adjust the seat back as recommended by the manufacturer in its instructions for attaching child restraints. If no instructions are provided, adjust the seat back to the position that enables SFAD 2 to attach to the lower anchorages that is the closest to the most upright position.

(b) Head restraints are adjusted in accordance with the manufacturer's instructions, provided pursuant to S12, as to how the head restraints should be adjusted when using the child restraint anchorage system. If instructions with regard to head restraint adjustment are not provided pursuant to S12, the head restraints are adjusted to any position.

S8. *Test procedures*. Each vehicle shall meet the requirements of S6.3.1 and S6.3.3 when tested according to the following procedures. Where a range of values is specified, the vehicle shall be able to meet the requirements at all points within the range. For testing specified in the procedures, the SFAD used in the test is connected to the anchorage by means of a steel cable that is fitted at one end with a high strength steel tether hook for attachment to the tether anchorage. The tether hook meets the specifications in Standard No. 213 (§ 571.213) as to the configuration and geometry of tether hooks required by that standard. A second steel cable is connected to the X point through which the test force is applied.

S8.1 Apply the force specified in S6.3.1 as follows—

(a) Use the following specified test device, as appropriate:

(1) SFAD 1, to test a tether anchorage at a designated seating position that does not have a child restraint anchorage system; or,

(2) SFAD 2, to test a tether anchorage at a designated seating position that has a child restraint anchorage system.

(b) Attach the SFAD 1 to the vehicle seat using the vehicle belts or the SFAD 2 to the lower anchorages of the child restraint anchorage system, as appropriate, and attach the test device to the tether anchorage, in accordance with the manufacturer's instructions provided pursuant to S12 of this standard. For the testing specified in this procedure, if SFAD 1 cannot be attached using the vehicle belts because of the location of the vehicle belt buckle, the test device shall be attached by material whose breaking strength is equal to or greater than the breaking strength of the webbing for the seat belt assembly installed as original equipment at that seating position. The geometry of the attachment shall duplicate the geometry, at the pre-load point, of the attachment of the originally installed seat belt assembly. All belt systems used to attach SFAD 1 shall be tightened to a tension of not less than 53.5 N and not more than 67 N, as measured by a load cell used on the webbing portion of the belt. A rearward force of 135 N ± 15 N shall be applied to the center of the lower front crossmember of SFAD 2 to press the device against the seat back as the fore-aft position of the rearward extensions of the SFAD is adjusted to remove any slack or tension.

(c) Apply the force—

(1) Initially, in a forward direction in a vertical longitudinal plane and through the Point X on the test device; and

(2) Initially, along a line through the X point and at an angle of 10 ± 5 degrees above the horizontal. Apply a preload force of 500 N to measure the angle; and then

(3) Increase the pull force as linearly as practicable to a full force application of 15,000 N in not less than 24 seconds and not more than 30 seconds, and maintain at a 15,000 N level for 1 second.

S8.2 Apply the force specified in S6.3.2 as follows:

(a) Attach a belt strap, and tether hook, to the user-ready tether anchorage. The belt strap extends not less than 250 mm forward from the vertical transverse plane touching the rear top edge of the vehicle seat back, and passes over the top of the vehicle seat

back as shown in Figure 19 of this standard;

(b) Apply the force at the end of the belt strap—

(1) Initially, in a forward direction in a vertical longitudinal plane that is parallel to the vehicle's longitudinal centerline;

(2) Initially, along a horizontal line or along any line below or above that line that is at an angle to that line of not more than 20 degrees;

(3) So that the force is attained within 30 seconds, at any onset rate of not more than 135,000 N/s; and

(4) Maintained at a 5,300 N level for a minimum of 1 second.

S9 *Requirements for the lower anchorages of the child restraint anchorage system.* As an alternative to complying with the requirements of S9, a vehicle manufactured on or after September 1, 1999 and before September 1, 2004 may, at the manufacturer's option (with said option irrevocably selected prior to, or at the time of, certification of the vehicle), meet the requirements in S15 of this standard. Vehicles manufactured on or after September 1, 2004 must meet the requirements of S9 of this standard.

S9.1 *Configuration of the lower anchorages*

S9.1.1 The lower anchorages shall consist of two bars that—

(a) Are 6 mm ± .1 mm in diameter;

(b) Are straight, horizontal and transverse, and whose centroidal longitudinal axes are collinear;

(c) Are not less than 25 mm, but not more than 40 mm in length;

(d) Can be connected to, over their entire length, as specified in paragraph S9.1.1(c), by the connectors of a child restraint system;

(e) Are 280 mm ±1 mm apart, measured from the center of the length of one bar to the center of the length of the other bar;

(f) Are an integral and permanent part of the vehicle or vehicle seat; and

(g) Are rigidly attached to the vehicle such that they will not deform more than 5 mm when subjected to a 100 N force in any direction.

S9.2 *Location of the lower anchorages.*

S9.2.1 With adjustable seats adjusted as described in S9.2.2, each lower anchorage bar shall be located so that a vertical transverse plane tangent to the front surface of the bar is:

(a) Not more than 70 mm behind the corresponding point Z of the CRF, measured parallel to the bottom surface of the CRF and in a vertical longitudinal plane, while the CRF is pressed against the seat back by the rearward application of a horizontal force of 5 N at point A on the CRF; and

(b) Not less than 120 mm behind the vehicle seating reference point, measured horizontally and in a vertical longitudinal plane.

S9.2.2 Adjustable seats are adjusted as follows:

(a) Place adjustable seat backs in the manufacturer's nominal design riding position in the manner specified by the manufacturer; and

(b) Place adjustable seats in the full rearward and full downward position.

S9.3 *Adequate fit of the lower anchorages.* Each vehicle and each child restraint anchorage system in that vehicle shall be designed such that the CRF can be placed inside the vehicle and attached to the lower anchorages of each child restraint anchorage system, with adjustable seats adjusted as described in S9.3(a) and (b).

(a) Place adjustable seat backs in the manufacturer's nominal design riding position in the manner specified by the manufacturer; and

(b) Place adjustable seats in the full rearward and full downward position.

(c) To facilitate installation of the CRF in a vehicle seat, the side, back and top frames of the CRF may be removed for installation in the vehicle, as indicated in Figure 1A of this standard. If necessary, the height of the CRF may be 560 mm.

S9.4 *Strength of the lower anchorages.*

S9.4.1 When tested in accordance with S11, the lower anchorages shall not allow point X on SFAD 2 to be displaced horizontally more than 125 mm, after preloading the device, when—

(a) A force of 11,000 N is applied in a forward direction in a vertical longitudinal plane that is parallel (0 ± 5 degrees) to the vehicle's longitudinal centerline; and

(b) A force of 5,000 N is applied in a lateral direction in a vertical longitudinal plane that is 75±5 degrees to either side of a vertical longitudinal

plane that is parallel to the vehicle's longitudinal centerline.

S9.4.1.1 Forces described in S9.4.1(a), forward direction, shall be applied with an initial force application angle of 10 ± 5 degrees above the horizontal. Forces described in S9.4.1(b), lateral direction, shall be applied horizontally (0 ± 5 degrees).

S9.4.1.2 The amount of displacement is measured relative to an undisturbed point on the vehicle body.

S9.4.2 *Provisions for simultaneous and sequential testing.* (a) In the case of vehicle seat assemblies equipped with more than one child restraint anchorage system, the lower anchorages may, at the agency's option, be tested simultaneously. However, forces may not be applied simultaneously for any two adjacent seating positions whose midpoints are less than 400 mm apart, as measured in accordance with S9.4.2(a)(1) and (2) and Figure 20.

(1) The midpoint of the seating position lies in the vertical longitudinal plane that is equidistant from vertical longitudinal planes through the geometric center of each of the two lower anchorages at the seating position.

(2) Measure the distance between the vertical longitudinal planes passing through the midpoints of the adjacent seating positions, as measured along a line perpendicular to the planes.

(b) The lower anchorages of a particular child restraint anchorage system will not be tested if one or both of the anchorages have been previously tested under this standard.

S9.5 *Marking and conspicuity of the lower anchorages.* Each vehicle shall comply with S9.5(a) or (b).

(a) Above each bar installed pursuant to S4, the vehicle shall be permanently marked with a circle:

(1) That is not less than 13 mm in diameter;

(2) Whose color contrasts with its background; and

(3) That is located on each seat back such that its center is not less than 50 mm and not more than 75 mm above the bar, and in the vertical longitudinal plane that passes through the center of the bar.

(b) The vehicle shall be configured such that each of the bars installed pursuant to S4 is visible, without the compression of the seat cushion or seat back, when the bar is viewed, in a vertical longitudinal plane passing through the center of the bar, along a line making an upward 30 degree angle with a horizontal plane.

S10. *Test conditions for testing the lower anchorages.* The test conditions described in this paragraph apply to the test procedures in S11.

(a) Adjust vehicle seats to their full rearward and full downward position and place the seat backs in their most upright position. When SFAD 2 is used in testing and cannot be attached to the lower anchorages with the seat back in this position, adjust the seat back as recommended by the manufacturer in its instructions for attaching child restraints. If no instructions are provided, adjust the seat back to the position closest to the upright position that enables SFAD 2 to attach to the lower anchorages.

(b) Head restraints are adjusted in accordance with the manufacturer's instructions, provided pursuant to S12, as to how the head restraints should be adjusted when using the child restraint anchorage system. If instructions with regard to head restraint adjustment are not provided pursuant to S12, the head restraints are adjusted to any position.

S11. *Test procedure.* Each vehicle shall meet the requirements of S9.4 when tested according to the following procedures. Where a range of values is specified, the vehicle shall be able to meet the requirements at all points within the range.

(a) *Forward force direction.* Place SFAD 2 in the vehicle seating position and attach it to the two lower anchorages of the child restraint anchorage system. Do not attach the tether anchorage. A rearward force of 135 ± 15 N shall be applied to the center of the lower front crossbar of SFAD 2 to press the device against the seat back as the fore-aft position of the rearward extensions of the SFAD is adjusted to remove any slack or tension. Apply a preload force of 500 N at point X of the test device. Increase the pull force as linearly as practicable to a full force application of 11,000 N in not less than

24 seconds and not more than 30 seconds, and maintain at an 11,000 N level for 10 seconds.

(b) *Lateral force direction*. Place SFAD 2 in the vehicle seating position and attach it to the two lower anchorages of the child restraint anchorage system. Do not attach the tether anchorage. A rearward force of 135 ± 15 N shall be applied to the center of the lower front crossbar of SFAD 2 to press the device against the seat back as the fore-aft position of the rearward extensions of the SFAD is adjusted to remove any slack or tension. Apply a preload force of 500 N at point X of the test device. Increase the pull force as linearly as practicable to a full force application of 5,000 N in not less than 24 seconds and not more than 30 seconds, and maintain at a 5,000 N level for 10 seconds.

S12. *Written instructions*. The vehicle must provide written instructions, in English, for using the tether anchorages and the child restraint anchorage system in the vehicle. If the vehicle has an owner's manual, the instructions must be in that manual. The instructions shall:

(a) Indicate which seating positions in the vehicle are equipped with tether anchorages and child restraint anchorage systems;

(b) In the case of vehicles required to be marked as specified in paragraphs S4.1, S9.5(a), or S15.4, explain the meaning of markings provided to locate the lower anchorages of child restraint anchorage systems; and

(c) Include instructions that provide a step-by-step procedure, including diagrams, for properly attaching a child restraint system's tether strap to the tether anchorages.

S13. *Tether anchorage phase-in requirements for passenger cars manufactured on or after September 1, 1999 and before September 1, 2000*.

S13.1 Passenger cars manufactured on or after September 1, 1999 and before September 1, 2000 shall comply with S13.1.1 through S13.2. At anytime during the production year ending August 31, 2000, each manufacturer shall, upon request from the Office of Vehicle Safety Compliance, provide information identifying the passenger cars (by make, model and vehicle identification number) that have been certified as complying with the tether anchorage requirements of this standard. The manufacturer's designation of a passenger car as a certified vehicle is irrevocable.

S13.1.1 Subject to S13.2, for passenger cars manufactured on or after September 1, 1999 and before September 1, 2000, the number of vehicles complying with S4.2 shall be not less than 80 percent of:

(a) The manufacturer's average annual production of passenger cars manufactured on or after September 1, 1996 and before September 1, 1999; or

(b) The manufacturer's production of passenger cars manufactured on or after September 1, 1999 and before September 1, 2000.

S13.1.2 For the purpose of calculating average annual production of vehicles for each manufacturer and the number of vehicles manufactured by each manufacturer under S13.1.1, a vehicle produced by more than one manufacturer shall be attributed to a single manufacturer as provided in S13.1.2(a) through (c), subject to S13.2.

(a) A vehicle which is imported shall be attributed to the importer.

(b) A vehicle manufactured in the United States by more than one manufacturer, one of which also markets the vehicle, shall be attributed to the manufacturer which markets the vehicle.

(c) A vehicle produced by more than one manufacturer shall be attributed to any one of the vehicle's manufacturers specified by an express written contract, reported to the National Highway Traffic Safety Administration under 49 CFR part 596, between the manufacturer so specified and the manufacturer to which the vehicle would otherwise be attributed under S13.1.2(a) or (b).

S13.2 For the purposes of calculating average annual production of passenger cars for each manufacturer and the number of passenger cars manufactured by each manufacturer under S13.1, each passenger car that is excluded from the requirement to provide tether anchorages is not counted.

S14. *Lower anchorages phase-in requirements for vehicles manufactured on or after September 1, 2000 and before September 1, 2002*.

S14.1 Vehicles manufactured on or after September 1, 2000 and before September 1, 2002 shall comply with S14.1.1 through S14.1.2. At anytime during the production years ending August 31, 2001, and August 31, 2002, each manufacturer shall, upon request from the Office of Vehicle Safety Compliance, provide information identifying the vehicles (by make, model and vehicle identification number) that have been certified as complying with the child restraint anchorage requirements of this standard. The manufacturer's designation of a vehicle as a certified vehicle is irrevocable.

S14.1.1 *Vehicles manufactured on or after September 1, 2000 and before September 1, 2001*. Subject to S14.4, for vehicles manufactured on or after September 1, 2000 and before September 1, 2001, the number of vehicles complying with S4.3 shall be not less than 20 percent of:

(a) The manufacturer's average annual production of vehicles manufactured on or after September 1, 1997 and before September 1, 2000; or

(b) The manufacturer's production on or after September 1, 2000 and before September 1, 2001.

S14.1.2 *Vehicles manufactured on or after September 1, 2001 and before September 1, 2002*. Subject to S14.4, for vehicles manufactured on or after September 1, 2001 and before September 1, 2002, the number of vehicles complying with S4.3 shall be not less than 50 percent of:

(a) The manufacturer's average annual production of vehicles manufactured on or after September 1, 1998 and before September 1, 2001; or

(b) The manufacturer's production on or after September 1, 2001 and before September 1, 2002.

S14.2 *Vehicles produced by more than one manufacturer*.

S14.2.1 For the purpose of calculating average annual production of vehicles for each manufacturer and the number of vehicles manufactured by each manufacturer under S14.1.1 through S14.1.2, a vehicle produced by more than one manufacturer shall be attributed to a single manufacturer as follows, subject to S14.2.2.

(a) A vehicle which is imported shall be attributed to the importer.

(b) A vehicle manufactured in the United States by more than one manufacturer, one of which also markets the vehicle, shall be attributed to the manufacturer which markets the vehicle.

S14.2.2 A vehicle produced by more than one manufacturer shall be attributed to any one of the vehicle's manufacturers specified by an express written contract, reported to the National Highway Traffic Safety Administration under 49 CFR part 596, between the manufacturer so specified and the manufacturer to which the vehicle would otherwise be attributed under S14.2.1.

S14.3 *Alternative phase-in schedules*. (a) *Final-stage manufacturers and alterers*. A final-stage manufacturer or alterer may, at its option, comply with the requirements set forth in S14.3(a)(1) and (2) instead of the requirements set forth in S14.1.1 through S14.1.2.

(1) Vehicles manufactured on or after September 1, 2000 and before September 1, 2002 are not required to comply with the requirements specified in this standard.

(2) Vehicles manufactured on or after September 1, 2002 must comply with the requirements specified in this standard.

(b) *Small volume manufacturers*. Vehicles manufactured on or after September 1, 2000 and before September 1, 2002 that are manufactured by a manufacturer that produces fewer than 5,000 vehicles worldwide annually are not required to provide the lower anchorages specified in this standard.

S14.4 For the purposes of calculating average annual production of vehicles for each manufacturer and the number of vehicles manufactured by each manufacturer under S14.1.1 and S14.1.2, each vehicle that is excluded from the requirement to provide child restraint anchorage systems is not counted.

S15 *Alternative to complying with the requirements of S9*. As an alternative to complying with the requirements of S9, a vehicle manufactured on or after September 1, 1999 and before September

1, 2004 may, at the manufacturer's option (with said option irrevocably selected prior to, or at the time of, certification of the vehicle), meet the requirements in S15 of this standard. Vehicles manufactured on or after September 1, 2004 must meet the requirements of S9 of this standard.

S15.1 *Dimensions and installation requirements.*

S15.1.1 *General.* The vehicle anchorages are positioned near the seat bight. The location of the anchorages is defined with respect to the CRF. If the vehicle seat is adjustable, it is adjusted as recommended by the vehicle manufacturer for use with child restraint systems.

S15.1.2 *Anchorage dimensions and location.*

S15.1.2.1 The lower anchorages shall consist of two bars that—

(a) Are 6 mm ± .1 mm in diameter;

(b) Are straight, horizontal and transverse;

(c) Are not less than 25 mm in length;

(d)–(e) [Reserved]

(f) Are permanently attached to the vehicle or vehicle seat such that they can only be removed by use of a tool, such as a screwdriver or wrench.

S15.1.2.2 (a) The anchorage bars are located at the vehicle seating position with the aid of and with respect to the CRF rearward extensions, with the CRF placed against or near the vehicle seat back. With the CRF attached to the anchorages and resting on the seat cushion, the bottom surface shall have attitude angles within the limits in the following table, angles measured relative to the vehicle horizontal, longitudinal and transverse reference planes.

TABLE TO S15.1.2.2(A)

Pitch	15° ± 10°
Roll	0° ± 5°
Yaw	0° ± 10°

Note: An explanation of the above angles is given in Figure 1.

(b) With adjustable seats adjusted as described in S15.1.2.2(c), each lower anchorage bar shall be located so that a vertical transverse plane intersecting the center of the bar is:

(1) Not more than 70 mm behind point Z of the CRF, measured parallel to the bottom surface of the CRF and to the center of the bar, with the CRF rear surface against the seat back; and

(2) Not less than 120 mm behind the vehicle seating reference point, measured horizontally and to the center of the bar. (NOTE: To facilitate installation of the CRF in a vehicle seat, the CRF may be constructed of smaller separable parts and assembled in the vehicle seat. Alternatively, vehicle components may be removed to allow access.)

(c) Adjustable seats are adjusted as recommended by the vehicle manufacturer for use with child restraint systems.

S15.2 *Static Strength Requirements.*

S15.2.1 The strength of the anchorages shall be determined using the procedure of S15.3 to apply forces to the SFAD 2, installed in the vehicle seating position and engaged with the anchorages. The vehicle seat shall be installed in the vehicle, or in sufficient parts of the vehicle so as to be representative of the strength and rigidity of the vehicle structure. If the seat is adjustable, it shall be placed in the position recommended by the vehicle manufacturer for use with child restraint systems. If no adjusted position is recommended, the seat shall be placed in any position, at the agency's option.

S15.2.2 Horizontal excursion of point X during application of the 8 kN and 5 kN forces must be not more than 125 mm, after preloading the device. The amount of displacement is measured relative to an undisturbed point on the vehicle body.

S15.3 *Forces and directions.*

S15.3.1 A rearward force of 135 N ± 15 N shall be applied to the center of the lower front crossbar of SFAD 2 to press the device against the seat back as the fore-aft position of the rearward extensions of the SFAD is adjusted to remove any slack or tension. Forces shall be applied to SFAD 2 in forward and lateral directions according to the following table.

TABLE TO S15.3.1.—DIRECTIONS OF TEST FORCES

Forward	0° ± 5°	8 kN ± 0.25 kN

TABLE TO S15.3.1.—DIRECTIONS OF TEST FORCES—Continued

Lateral	75° ± 5° (to both sides of straight forward).	5 kN ± 0.25 kN

S15.3.2 Forces in the forward direction shall be applied with an initial force application angle of 10 ± 5 degrees above the horizontal. Lateral forces shall be applied horizontally (0° ± 5°). A pre-load force of 500 N ± 25 N shall be applied at the prescribed loading point (point X) in Figure 17. The force shall be increased to 8 kN ± 0.25 kN for forward tests, or to 5 kN ± 0.25 kN for lateral tests. Full application of the force shall be achieved within a time period of 2 seconds or less. The force shall be maintained for a period of 0.25 seconds ± 0.05 seconds.

S15.3.3 *Provisions for simultaneous and sequential testing.* (a) If anchorages for more than one child restraint anchorage system are installed in the vehicle seat assembly and not directly into the vehicle structure, the forces described in S15.3 may, at the agency's option, be applied simultaneously to SFADs engaged with the anchorages. However, that force may not be applied simultaneously to SFADs engaged at any two adjacent seating positions whose midpoints are less than 400 mm apart, as measured in accordance with S15.3.3(a)(1) and (2) and Figure 20.

(1) The midpoint of the seating position lies in the vertical longitudinal plane that is equidistant from vertical longitudinal planes through the geometric center of each of the two lower anchorages at the seating position.

(2) Measure the distance between the vertical longitudinal planes passing through the midpoints of the adjacent seating positions, as measured along a line perpendicular to the planes.

(b) The lower anchorages of a particular child restraint anchorage system will not be tested if one or both of the anchorages have been previously tested under this standard.

S15.4 *Marking and conspicuity of the lower anchorages.* At least one anchorage bar (when deployed for use), one guidance fixture, or one seat marking feature shall be readily visible to the person installing the CRF. If guidance fixtures are used to meet this requirement, the fixture(s) (although removable) must be installed. Storable anchorages shall be provided with a telltale or label that is visible when the anchorage is stored.

FIGURES TO §571.225

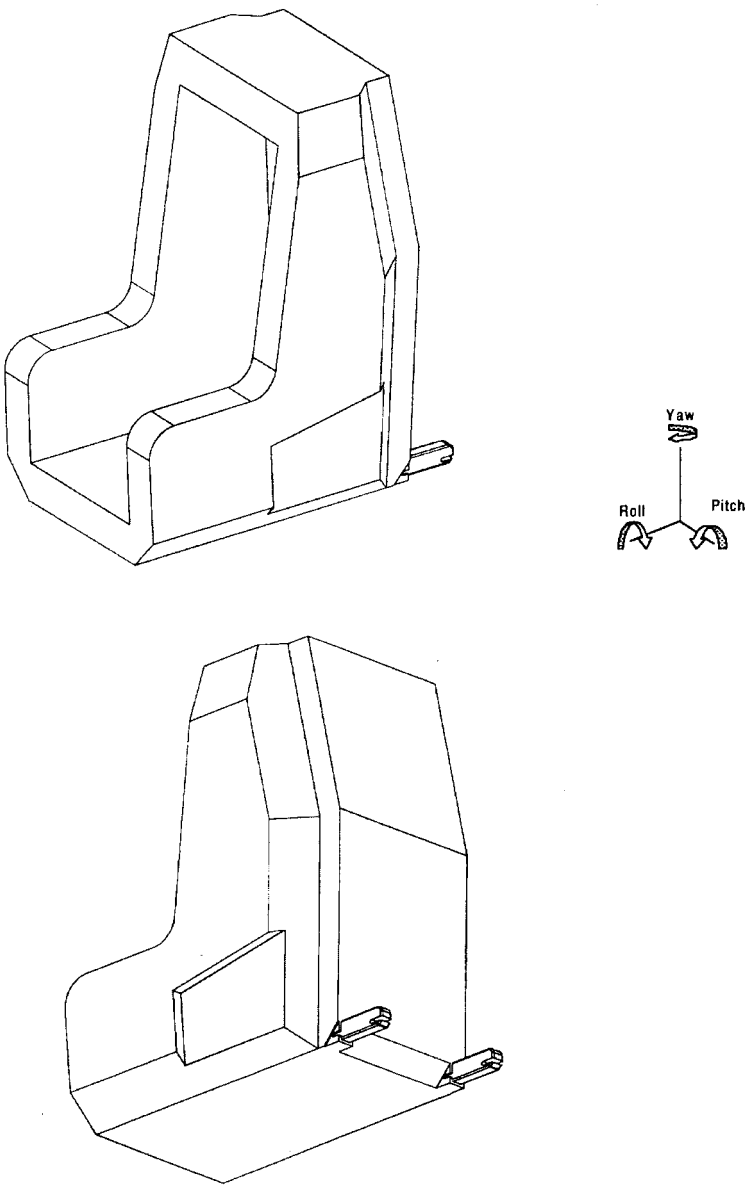

Figure 1 – Child restraint fixture (CRF)

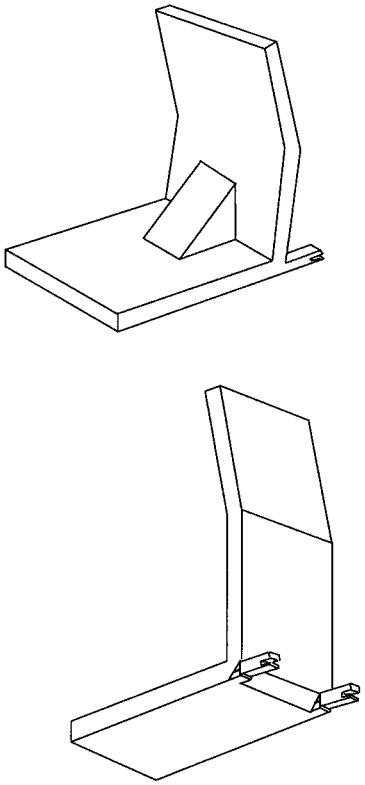

Figure 1A - Child Restraint Fixture (CRF) with Side and Top Frames Removed

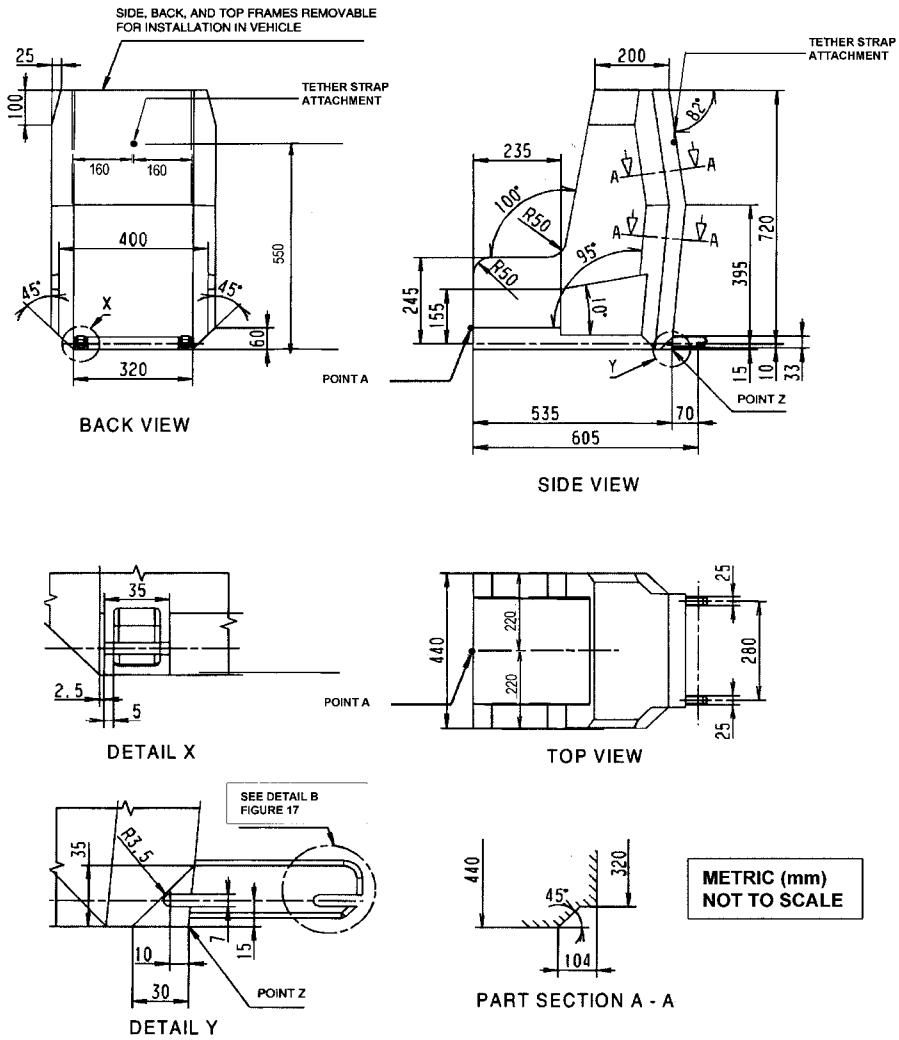

Note:
1. Mass of CRF 5 to 8 kg

Figure 2 - Child restraint fixture (CRF)

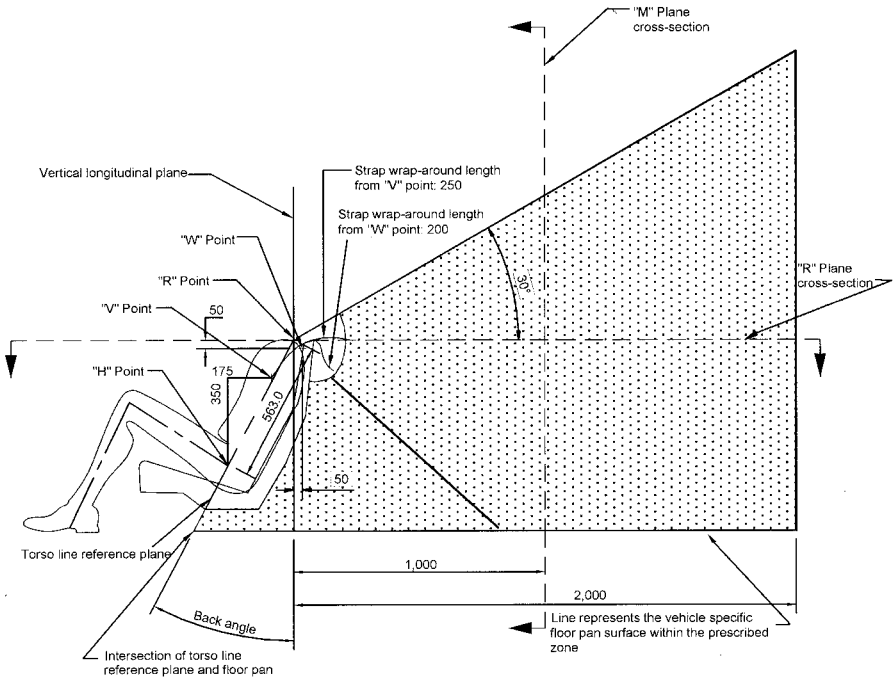

Notes

1. Dimensions in mm, except where otherwise indicated
2. Portion of user-ready tether anchorage that is designed to bind with the tether strap hook to be located within shaded zone
3. Drawing not to scale
4. "R" Point: Shoulder reference point
5. "V" Point: V-reference point, 350 mm vertically above and 175 mm horizontally back from H-point
6. "W" Point: W-reference point, 50 mm vertically below and 50 mm horizontally back from "R" Point
7. "M" Plane: M-reference plane, 1 000 mm horizontally back from "R" Point

Figure 3 -- Side View, User-ready Tether Anchorage Location

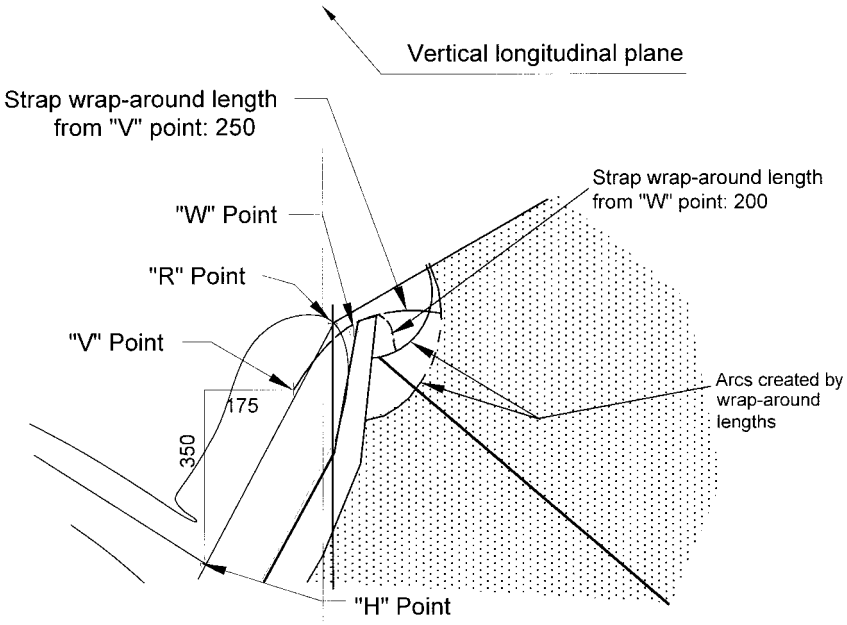

Notes

1. Dimensions in mm, except where otherwise indicated
2. Portion of user-ready tether anchorage that is designed to bind with the tether strap hook to be located within shaded zone
3. Drawing not to scale
4. "R" Point: Shoulder reference point
5. "V" Point: V-reference point, 350 mm vertically above and 175 mm horizontally back from H-point
6. "W" Point: W-reference point, 50 mm vertically below and 50 mm horizontally back from "R" Point
7. "M" Plane: M-reference plane, 1 000 mm horizontally back from "R" Point

Figure 4 -- Enlarged Side View of Strap Wrap-around Area, User-ready Tether Anchorage Location

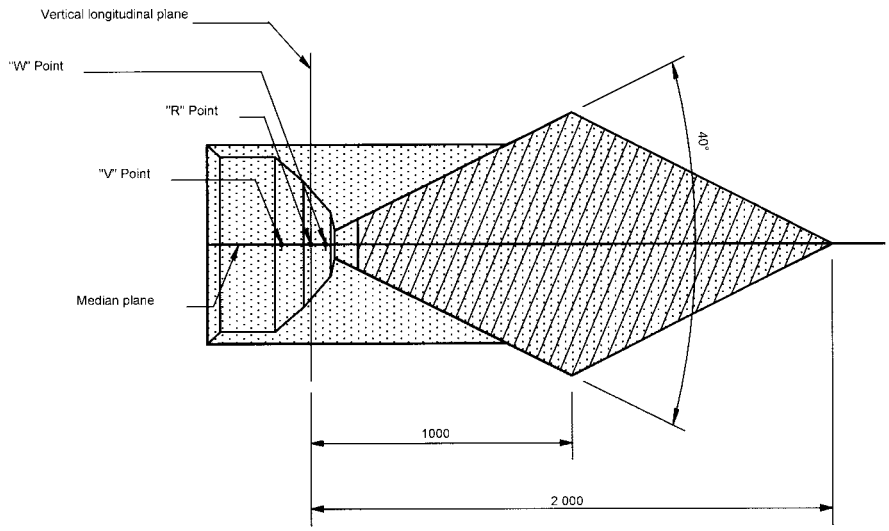

1. Dimensions in mm, except where otherwise indicated
2. Portion of user-ready tether anchorage that is designed to bind with the tether strap hook to be located within shaded zone
3. Drawing not to scale
4. "R" Point: Shoulder reference point
5. "V" Point: V-reference point, 350 mm vertically above and 175 mm horizontally back from H-point.
6. "W" Point: W-reference point, 50 mm vertically below and 50 mm horizontally back from "R" Point

Figure 5. Plan View (R-plane Cross Section), User-ready Tether Anchorage Location

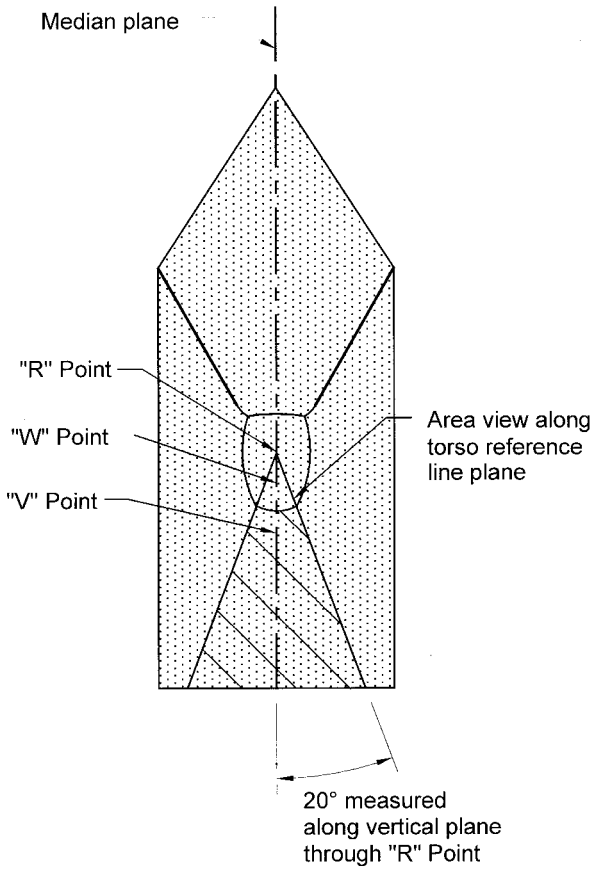

Notes
1. Portion of user-ready tether anchorage that is designed to bind with the tether strap hook to be located within shaded zone
2. Drawing not to scale
3. "R" Point: Shoulder reference point
4. "V" Point: V-reference point, 350 mm vertically above and 175 mm horizontally back from H-point
5. "W" Point: W-reference point, 50 mm vertically below and 50 mm horizontally back from "R" Point

Figure 6 -- Front View, User-ready Tether Anchorage Location

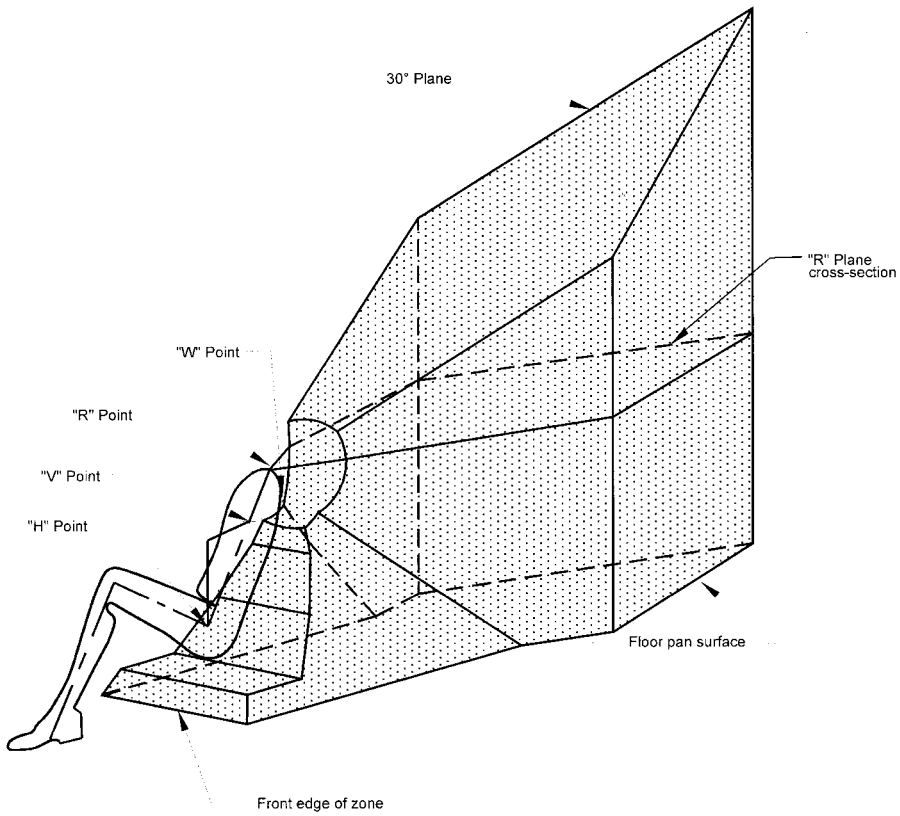

Notes

1. Portion of user-ready tether anchorage that is designed to bind with the tether strap hook to be located within shaded zone
2. Drawing not to scale
3. "R" Point: Shoulder reference point
4. "V" Point: V-reference point, 350 mm vertically above and 175 mm horizontally back from H-point
5. "W" Point: W-reference point, 50 mm vertically below and 50 mm horizontally back from "R" Point

Figure 7 -- Three-dimensional Schematic View of User-ready Tether Anchorage Location

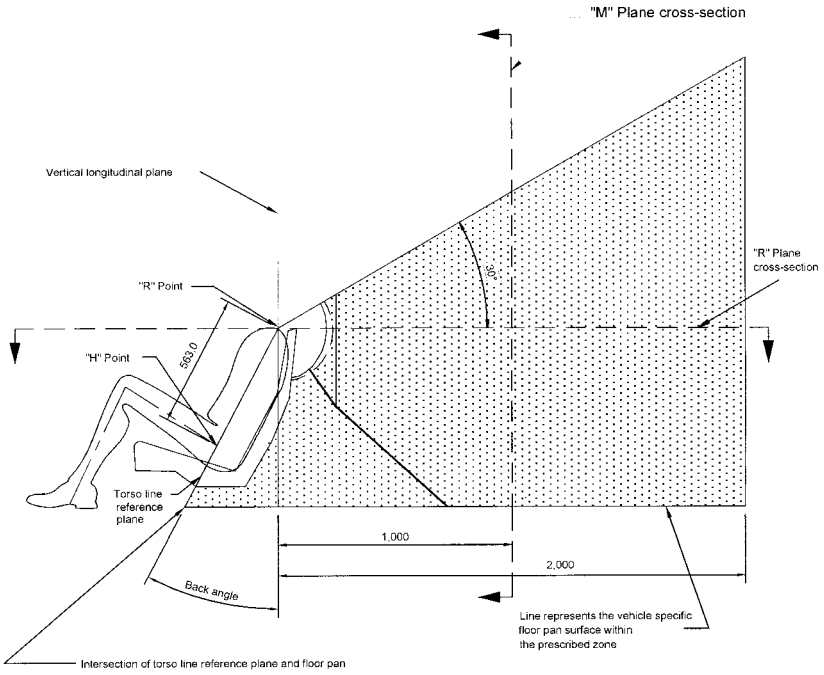

Notes

1. Dimensions in mm, except where otherwise indicated
2. Portion of user-ready tether anchorage that is designed to bind with the tether strap hook to be located within shaded zone
3. Drawing not to scale
4. "R" Point: Shoulder reference point
5. "M" Plane: M-reference plane, 1 000 mm horizontally back from "R" Point

Figure 8 -- Side View, User-ready Tether Anchorage Optional Location for Passenger Cars and Multipurpose Passenger Vehicles until September 1, 2004

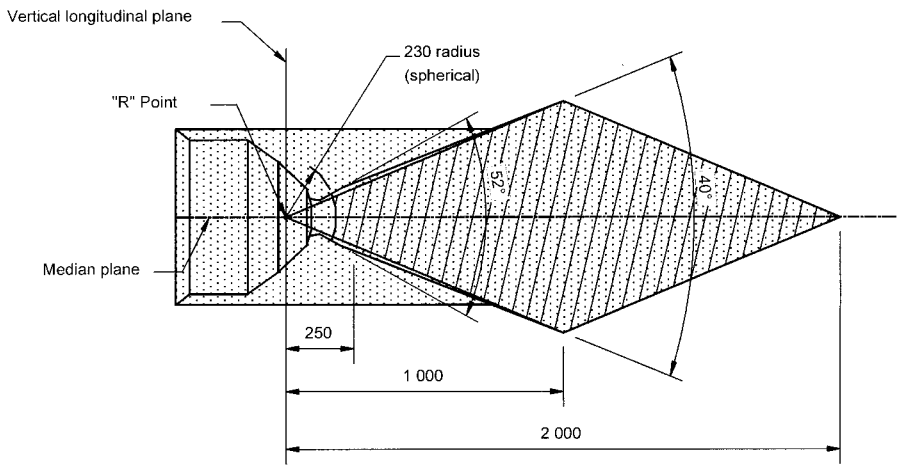

Notes

1. Dimensions in mm, except where otherwise indicated
2. Portion of user-ready tether anchorage that is designed to bind with the tether strap hook to be located within shaded zone
3. Drawing not to scale
4. "R" Point: Shoulder reference point

Figure 9 -- Plan View (R-point Level), User-ready Tether Anchorage Optional Location for Passenger Cars and Multipurpose Passenger Vehicles until September 1, 2004

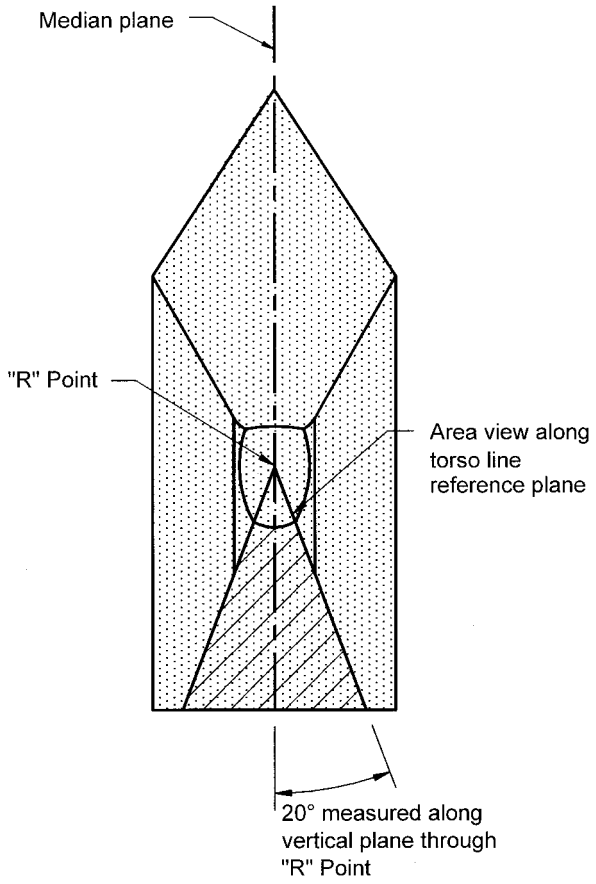

Notes

1. Portion of user-ready tether anchorage that is designed to bind with the tether strap hook to be located within shaded zone
2. Drawing not to scale
3. "R" Point: Shoulder reference point

Figure 10 -- Front View, User-ready Tether Anchorage Optional Location for Passenger Cars and Multipurpose Passenger Vehicles until September 1, 2004

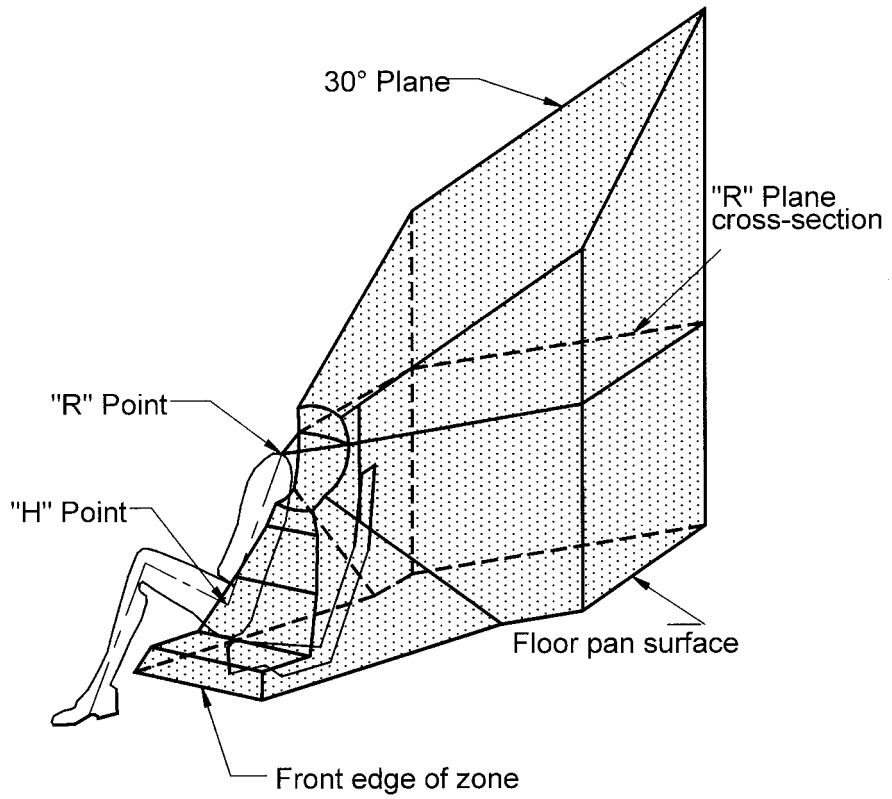

Notes

1. Portion of user-ready tether anchorage that is designed to bind with the tether strap hook to be located within shaded zone
2. Drawing not to scale
3. "R" Point: Shoulder reference point

Figure 11 -- Three-dimensional Schematic View of User-ready Tether Anchorage Optional Location for Passenger Cars and Multipurpose Passenger Vehicles until September 1, 2004

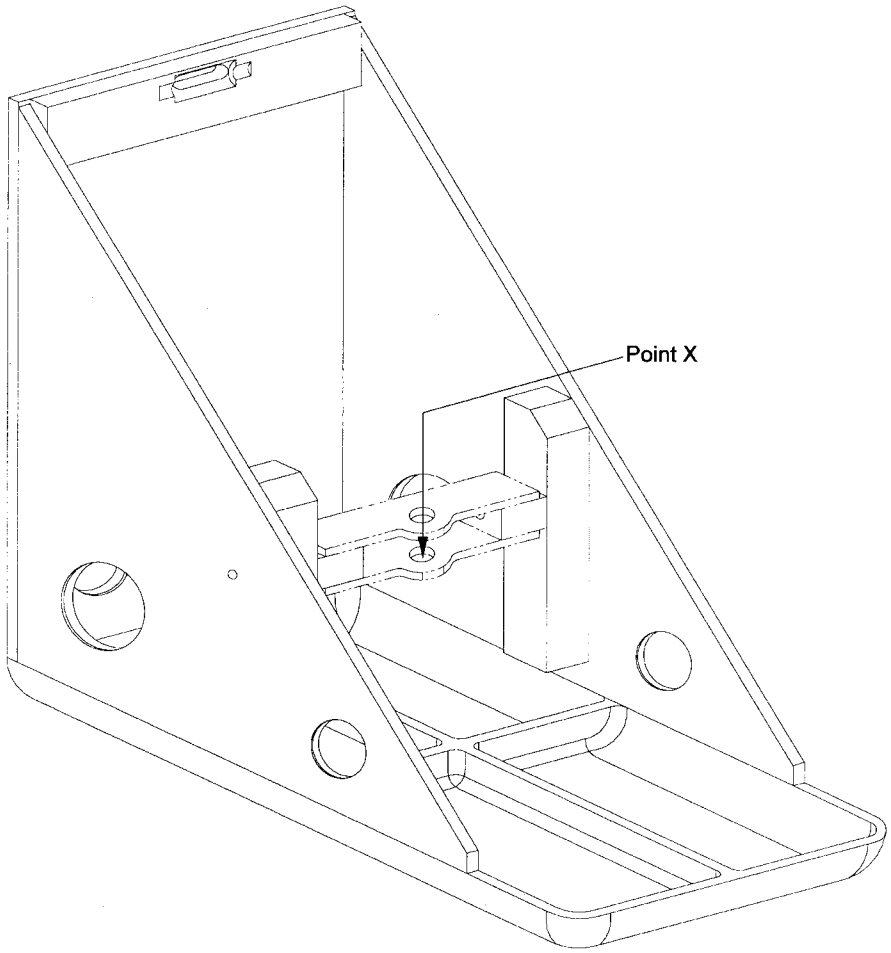

Figure 12 – Three Dimensional Schematic View of the Static Force Application Device 1 (SFAD 1)

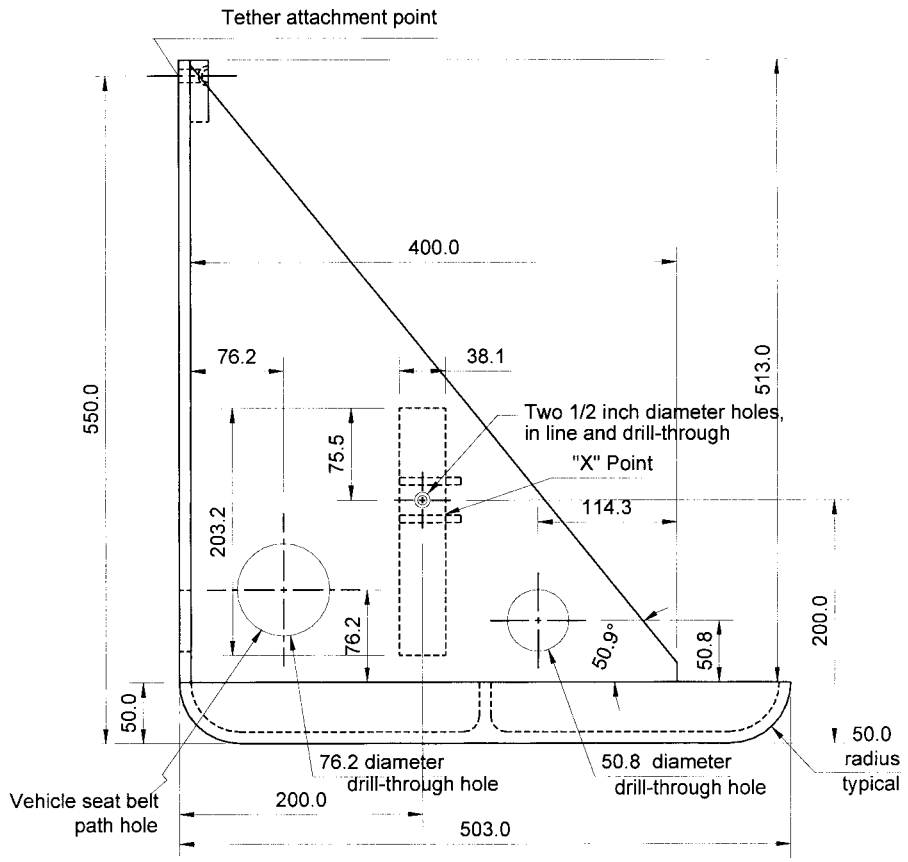

Notes

1. Material: 6061-T6-910 Aluminum
2. Dimensions in mm, except where otherwise indicated
3. Drawing not to scale
4. Break all outside corners

Figure 13 -- Side View, Static Force Application Device 1 (SFAD 1)

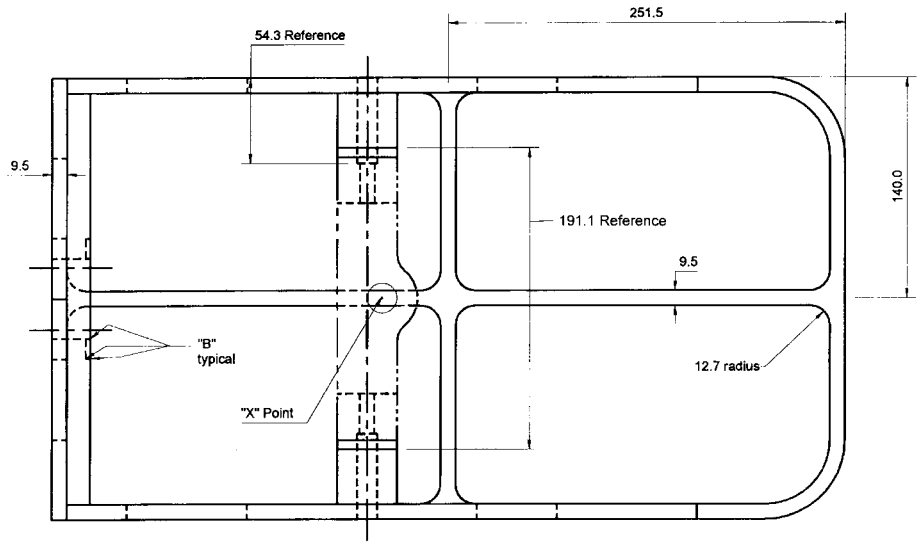

Notes

1. Material: 6061-T6-910 Aluminum
2. Dimensions in mm, except where otherwise indicated
3. Drawing not to scale
4. Break all outside corners and lightning hole edges 1.5 mm approximately.
5. Break edges of vehicle seat belt path holes at least 4 mm
6. "B" = approximately 0.8 mm

Figure 14 -- Plan View, Static Force Application Test Device 1 (SFAD 1)

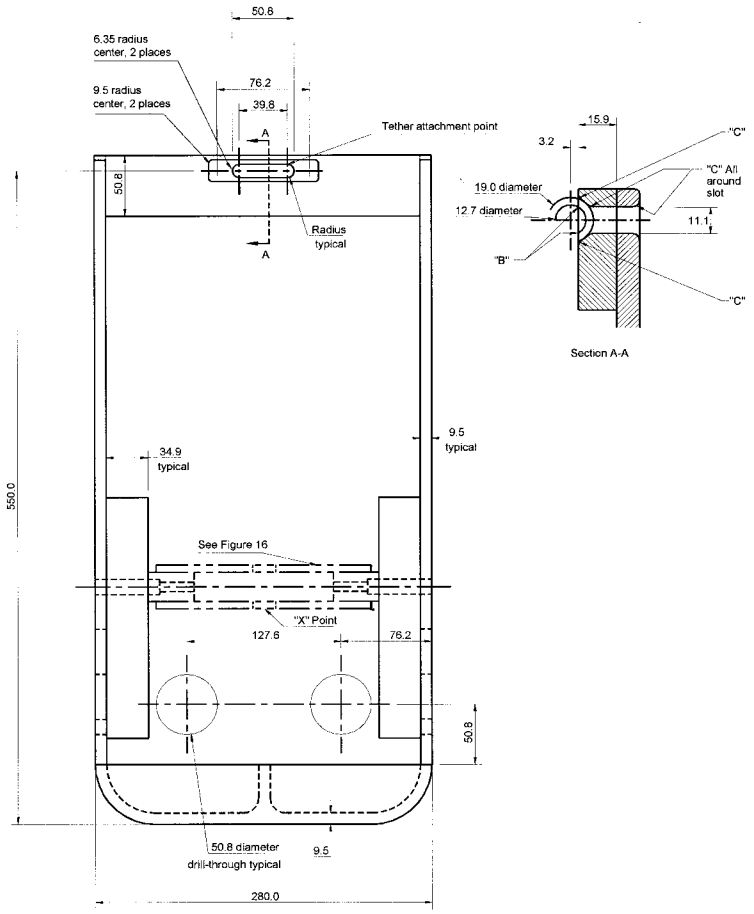

Notes
1. Material: 6061-T6-910 Aluminum
2. Dimensions in mm, except where otherwise indicated
3. Drawing not to scale
4. "B" = approximately 0.8 mm
5. "C" = approximately 3.2 mm

Figure 15 -- Front View, Static Force Application Device 1 (SFAD 1)

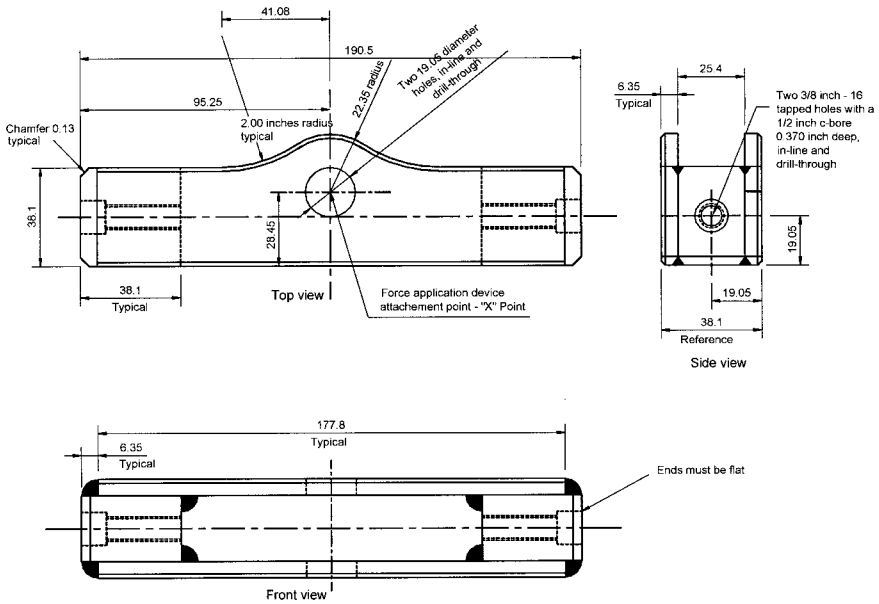

Notes
1. Material: Steel
2. Dimensions in mm, except where otherwise indicated
3. Drawing not to scale
4. Break all outside corners approximately 1.5 mm
5. Surfaces and edges are not to be machined unless otherwise specified for tolerance.
6. Saw-cut or stock size material whenever possible.
7. Construction to be securely welded.

Figure 16 -- Cross Bar, Static Force Application Device 1 (SFAD 1)

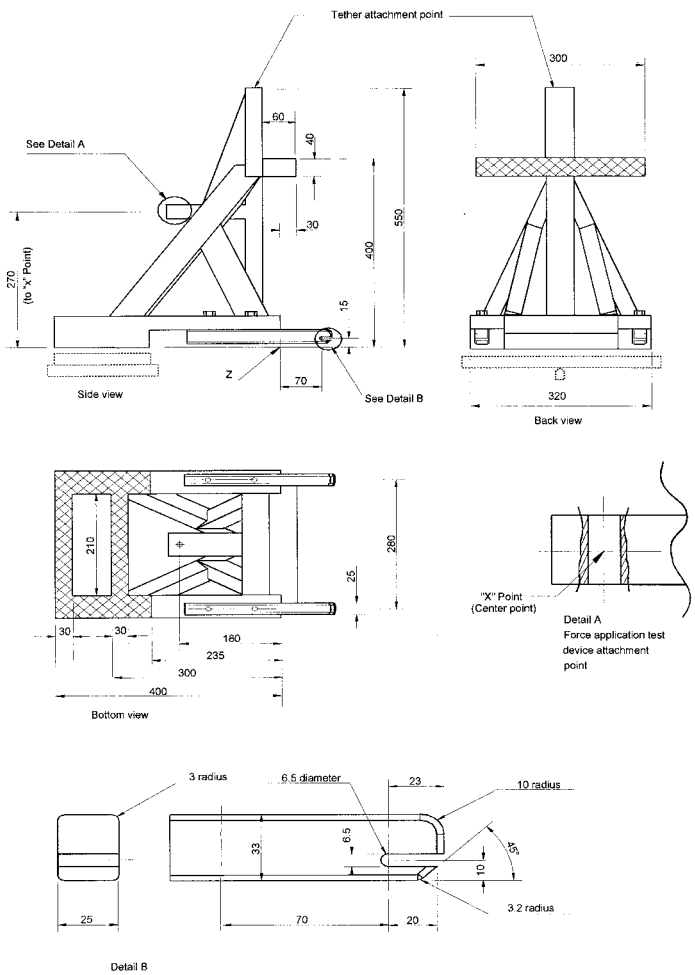

Notes:
1. Drawing not to scale
2. Dimensions in mm, except where otherwise indicated
3. Device stiffness satisfied when using a securely welded construction consisting of rectangular 3 mm steel tubing and 6 mm thick load application plate
4. If construction not as per note 3, stiffness of device is satisfied if movement of point "X" is not more than 2 mm in any direction when forces are applied as specified in S15.2.1, with device attached to rigid anchorage bars and the front cross member supported by a rigid bar that is held at the center by a longitudinal pivot 25 mm below the SFAD2 base (as shown in broken lines) to allow bending and twisting of the base of the device. Any deformation of the anchorage bars to be excluded from the measurements of the movement of point "X".

Figure 17- Side, Back and Bottom Views, ISO 13216-1 Static Force Application Device 2 (SFAD 2)

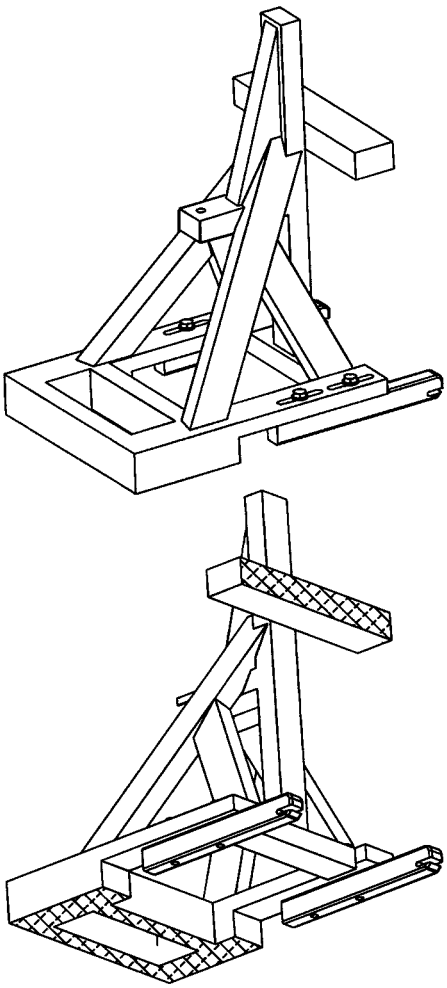

Figure 18 -- Three-dimensional Schematic Views of the ISO 13216-1 Static Force Application Device 2 (SFAD 2)

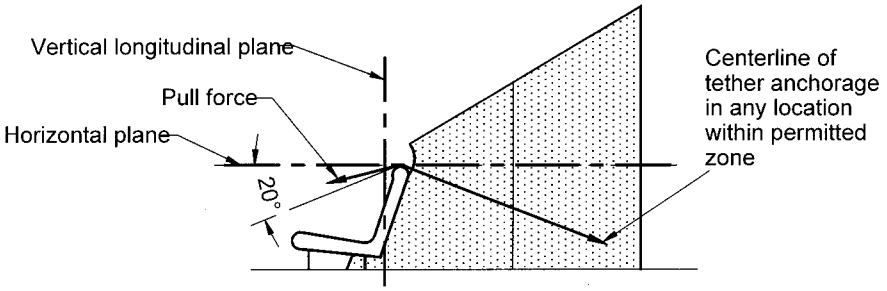

Figure 19 – Side View, Optional Tether Anchorage Test for Passenger Cars until September 1, 2004

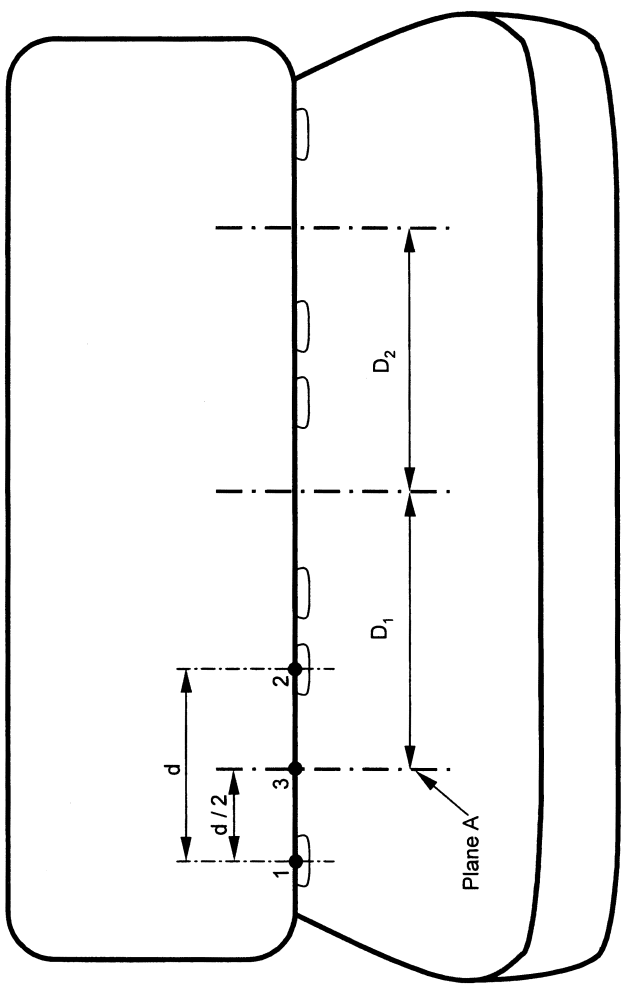

d = center to center distance between lower anchorages for a given seating position (nominally 280 mm).

D = distance between vertical longitudinal planes located midway between the anchorages for a given seating position.

Figure 20 -- Measurement of Distance Between Adjacent Seating Positions for Use in Simultaneous Testing

[64 FR 10823, Mar. 5, 1999, as amended at 64 FR 47587, Aug. 31, 1999; 65 FR 46640, July 31, 2000]

§571.301 Standard No. 301; Fuel system integrity.

S1. *Scope*. This standard specifies requirements for the integrity of motor vehicle fuel systems.

S2. *Purpose*. The purpose of this standard is to reduce deaths and injuries occurring from fires that result from fuel spillage during and after motor vehicle crashes, and resulting from ingestion of fuels during siphoning.

S3. *Application*. This standard applies to passenger cars, and to multipurpose passenger vehicles, trucks and buses that have a GVWR of 4,536 kg or less and use fuel with a boiling point above 0 °C, and to school buses that have a

GVWR greater than 4,536 kg and use fuel with a boiling point above 0 °C.

S4. *Definition. Fuel spillage* means the fall, flow, or run of fuel from the vehicle but does not include wetness resulting from capillary action.

S5. *General requirements.*

S5.1 *Passenger cars, and multipurpose passenger vehicles, trucks, and buses with a GVWR of 10,000 pounds or less.* Each passenger car and each multipurpose passenger vehicle, truck, and bus with a GVWR of 10,000 pounds or less shall meet the requirements of S6.1 through S6.4. Each of these types of vehicles that is manufactured to use alcohol fuels shall also meet the requirements of S6.6.

S5.2 [Reserved]

S5.3 [Reserved]

S5.4 *Schoolbuses with a GVWR greater than 10,000 pounds.* Each schoolbus with a GVWR greater than 10,000 pounds shall meet the requirements of S6.5. Each schoolbus with a GVWR greater than 10,000 pounds that is manufactured to use alcohol fuels shall meet the requirements of S6.6.

S5.5 *Fuel spillage; Barrier crash.* Fuel spillage in any fixed or moving barrier crash test shall not exceed 28 g from impact until motion of the vehicle has ceased, and shall not exceed a total of 142 g in the 5-minute period following cessation of motion. For the subsequent 25-minute period, fuel spillage during any 1 minute interval shall not exceed 28 g.

S5.6 *Fuel spillage; rollover.* Fuel spillage in any rollover test, from the onset of rotational motion, shall not exceed a total of 142 g for the first 5 minutes of testing at each successive 90° increment. For the remaining test period, at each increment of 90° fuel spillage during any 1 minute interval shall not exceed 28 g.

S5.7. *Alcohol fuel vehicles.* Each vehicle manufactured to operate on an alcohol fuel (e.g., methanol, ethanol) or a fuel blend containing at least 20 percent alcohol fuel shall meet the requirements of S6.6.

S6. *Test requirements.* Each vehicle with a GVWR of 4,536 kg or less shall be capable of meeting the requirements of any applicable barrier crash test followed by a static rollover, without alteration of the vehicle during the test sequence. A particular vehicle need not meet further requirements after having been subjected to a single barrier crash test and a static rollover test.

S6.1 *Frontal barrier crash.* When the vehicle travelling longitudinally forward at any speed up to and including 48 km/h impacts a fixed collision barrier that is perpendicular to the line of travel of the vehicle, or at any angle up to 30° in either direction from the perpendicular to the line of travel of the vehicle, with 50th-percentile test dummies as specified in part 572 of this chapter at each front outboard designated seating position and at any other position whose protection system is required to be tested by a dummy under the provisions of Standard No. 208, under the applicable conditions of S7., fuel spillage shall not exceed the limits of S5.5.

S6.2 *Rear moving barrier crash.* When the vehicle is impacted from the rear by a barrier moving at 48 km/h, with test dummies as specified in part 572 of this chapter at each front outboard designated seating position, under the applicable conditions of S7., fuel spillage shall not exceed the limits of S5.5.

S6.3 *Lateral moving barrier crash.* When the vehicle is impacted laterally on either side by a barrier moving at 32 km/h with 50th-percentile test dummies as specified in part 572 of this chapter at positions required for testing to Standard No. 208, under the applicable conditions of S7., fuel spillage shall not exceed the limits of S5.5.

S6.4 *Static rollover.* When the vehicle is rotated on its longitudinal axis to each successive increment of 90°, following an impact crash of S6.1, S6.2, or S6.3, fuel spillage shall not exceed the limits of S5.6.

S6.5 *Moving contoured barrier crash.* When the moving contoured barrier assembly traveling longitudinally forward at any speed up to and including 48 km/h impacts the test vehicle (school bus with a GVWR exceeding 4,536 kg) at any point and angle, under the applicable conditions of S7.1 and S7.5, fuel spillage shall not exceed the limits of S5.5.

S6.6 *Anti-siphoning test for alcohol fuel vehicles.* Each vehicle shall have means that prevent any hose made of vinyl plastic or rubber, with a length of

not less than 1200 millimeters (mm) and an outside diameter of not less than 5.2 mm, from contacting the level surface of the liquid fuel in the vehicle's fuel tank or fuel system, when the hose is inserted into the filler neck attached to the fuel tank with the fuel tank filled to any level from 90 to 95 percent of capacity.

S7. *Test conditions.* The requirements of S5.1 through S5.6 and S6.1 through S6.5 shall be met under the following conditions. Where a range is specified, the vehicle must be capable of meeting the requirements at all points within the range.

S7.1 *General test conditions.* The following conditions apply to all tests.

S7.1.1 The fuel tank is filled to any level from 90 to 95 percent of capacity with Stoddard solvent, having the physical and chemical properties of type 1 solvent, Table I ASTM Standard D484–71, ''Standard Specifications for Hydrocarbon Dry Cleaning Solvents.''

S7.1.2 The fuel system other than the fuel tank is filled with Stoddard solvent to its normal operating level.

S7.1.3 In meeting the requirements of S6.1 through S6.3, if the vehicle has an electrically driven fuel pump that normally runs when the vehicle's electrical system is activated, it is operating at the time of the barrier crash.

S7.1.4 The parking brake is disengaged and the transmission is in neutral, except that in meeting the requirements of S6.5 the parking brake is set.

S7.1.5 Tires are inflated to manufacturer's specifications.

S7.1.6 The vehicle, including test devices and instrumentation, is loaded as follows:

(a) Except as specified in S7.1.1, a passenger car is loaded to its unloaded vehicle weight plus its rated cargo and luggage capacity weight, secured in the luggage area, plus the necessary test dummies as specified in S6., restrained only by means that are installed in the vehicle for protection at its seating position.

(b) Except as specified in S7.1.1, a multipurpose passenger vehicle, truck, or bus with a GVWR of 4,536 kg or less is loaded to its unloaded vehicle weight, plus the necessary test dummies, as specified in S6., plus 136 kg or its rated cargo and luggage capacity weight, whichever is less, secured to the vehicle and distributed so that the weight on each axle as measured at the tire-ground interface is proportional to its GAWR. If the weight on any axle, when the vehicle is loaded to unloaded vehicle weight plus dummy weight, exceeds the axle's proportional share of the test weight, the remaining weight shall be placed so that the weight on that axle remains the same. Each dummy shall be restrained only by means that are installed in the vehicle for protection at its seating position.

(c) Except as specified in S7.1.1, a school bus with a GVWR greater than 4,536 kg is loaded to its unloaded vehicle weight, plus 54 kg of unsecured mass at each designated seating position.

S7.2 *Lateral moving barrier crash test conditions.* The lateral moving barrier crash test conditions are those specified in S8.2 of Standard No. 208, 49 CFR 571.208.

S7.3 *Rear moving barrier test conditions.* The rear moving barrier test conditions are those specified in S8.2 of Standard No. 208, 49 CFR 571.208, except for the positioning of the barrier and the vehicle. The barrier and test vehicle are positioned so that at impact—

(a) The vehicle is at rest in its normal attitude;

(b) The barrier is traveling at 48 km/h with its face perpendicular to the longitudinal centerline of the vehicle; and

(c) A vertical plane through the geometric center of the barrier impact surface and perpendicular to that surface coincides with the longitudinal centerline of the vehicle.

S7.4 *Static rollover test conditions.* The vehicle is rotated about its longitudinal axis, with the axis kept horizontal, to each successive increment of 90°, 180°, and 270° at a uniform rate, with 90° of rotation taking place in any time interval from 1 to 3 minutes. After reaching each 90° increment the vehicle is held in that position for 5 minutes.

S7.5 *Moving contoured barrier test conditions.* The following conditions apply to the moving contoured barrier crash test.

S7.5.1 The moving barrier, which is mounted on a carriage as specified in Figure 1, is of rigid construction, symmetrical about a vertical longitudinal plane. The contoured impact surface, which is 629 mm high and 1,981 mm wide, conforms to the dimensions shown in Figure 2, and is attached to the carriage as shown in that figure. The ground clearance to the lower edge of the impact surface is 133 mm ± 13 mm. The wheelbase is 3,048 mm ± 50 mm.

S7.5.2 The moving contoured barrier, including the impact surface, supporting structure, and carriage, has a mass of 1,814 kg ± 23 kg with the mass distributed so that 408 kg ± 11 kg is at each rear wheel and 499 kg ± 11 kg is at each front wheel. The center of gravity is located 1,372 mm ± 38 mm rearward of the front wheel axis, in the vertical longitudinal plane of symmetry, 401 mm above the ground. The moment of inertia about the center of gravity is:

$I_x = 367\ kgm^2 \pm 18.4\ kgm^2$

$I_z = 4{,}711\ kgm^2 \pm 236\ kgm^2$

S7.5.3 The moving contoured barrier has a solid nonsteerable front axle and fixed rear axle attached directly to the frame rails with no spring or other type of suspension system on any wheel. (The moving barrier assembly is equipped with a braking device capable of stopping its motion.)

S7.5.4 The moving barrier assembly is equipped with G78–15 pneumatic tires with a tread width of 152 mm ± 25 mm, inflated to 165 kPa.

S7.5.5 The concrete surface upon which the vehicle is tested is level, rigid, and of uniform construction, with a skid number of 75 when measured in accordance with American Society of Testing and Materials Method E: 274–65T at 64 km/h, omitting water delivery as specified in paragraph 7.1 of that method.

S7.5.6 The barrier assembly is released from the guidance mechanism immediately prior to impact with the vehicle.

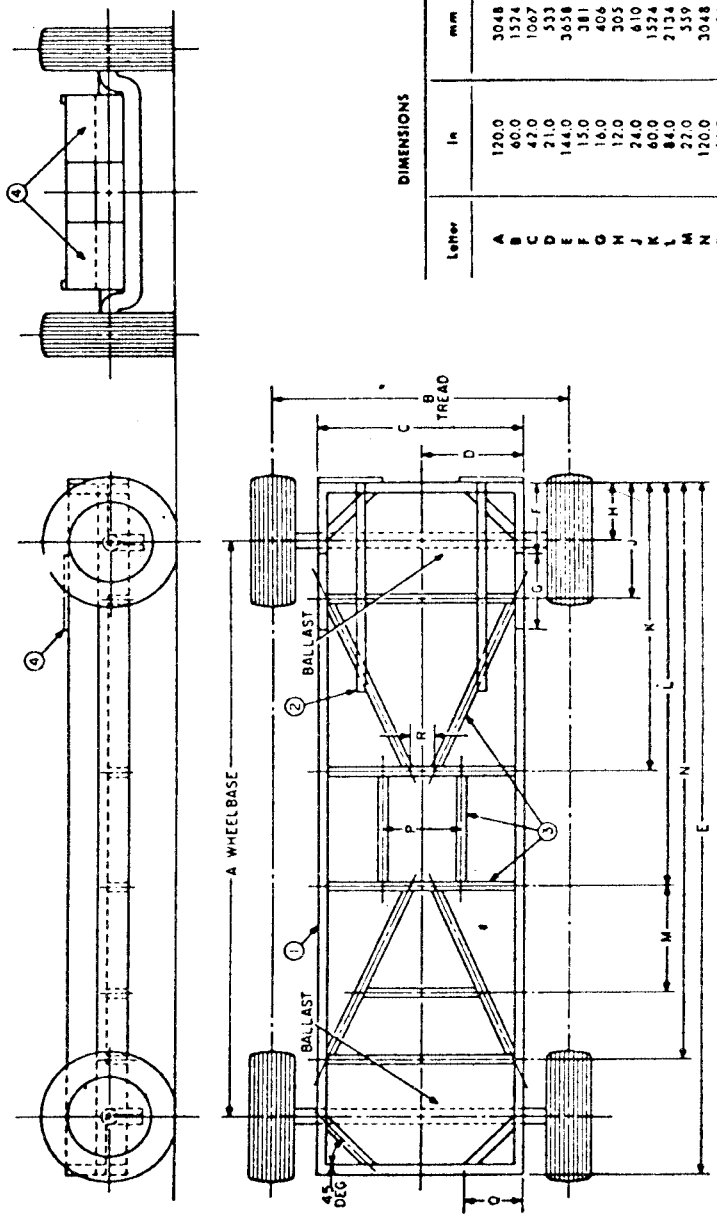

DIMENSIONS		
Letter	In	mm
A	120.0	3048
B	60.0	1524
C	42.0	1067
D	21.0	533
E	144.0	3658
F	15.0	381
G	16.0	406
H	12.0	305
J	24.0	610
K	60.0	1524
L	84.0	2134
M	22.0	559
N	120.0	3048
P	16.0	406
Q	12.0	305
R	6.0	152

NOTES:
1. OUTER FRAME 6.0 × 2.0 × 0.19 IN (152 × 51 × 5 mm) STEEL TUBING, TWO PIECES WELDED TOGETHER FOR A 12.0 IN (305 mm) HEIGHT.
2. BALLAST TIE DOWNS.
3. ALL INNER REINFORCEMENTS AND FRAME GUSSETS OF 4.0 × 2.0 × 0.19 IN (102 × 51 × 5 mm) STEEL TUBING.
4. REINFORCED AREAS FOR BOLTING ON FACE PLATES.

FIG. 1—COMMON CARRIAGE FOR MOVING BARRIERS

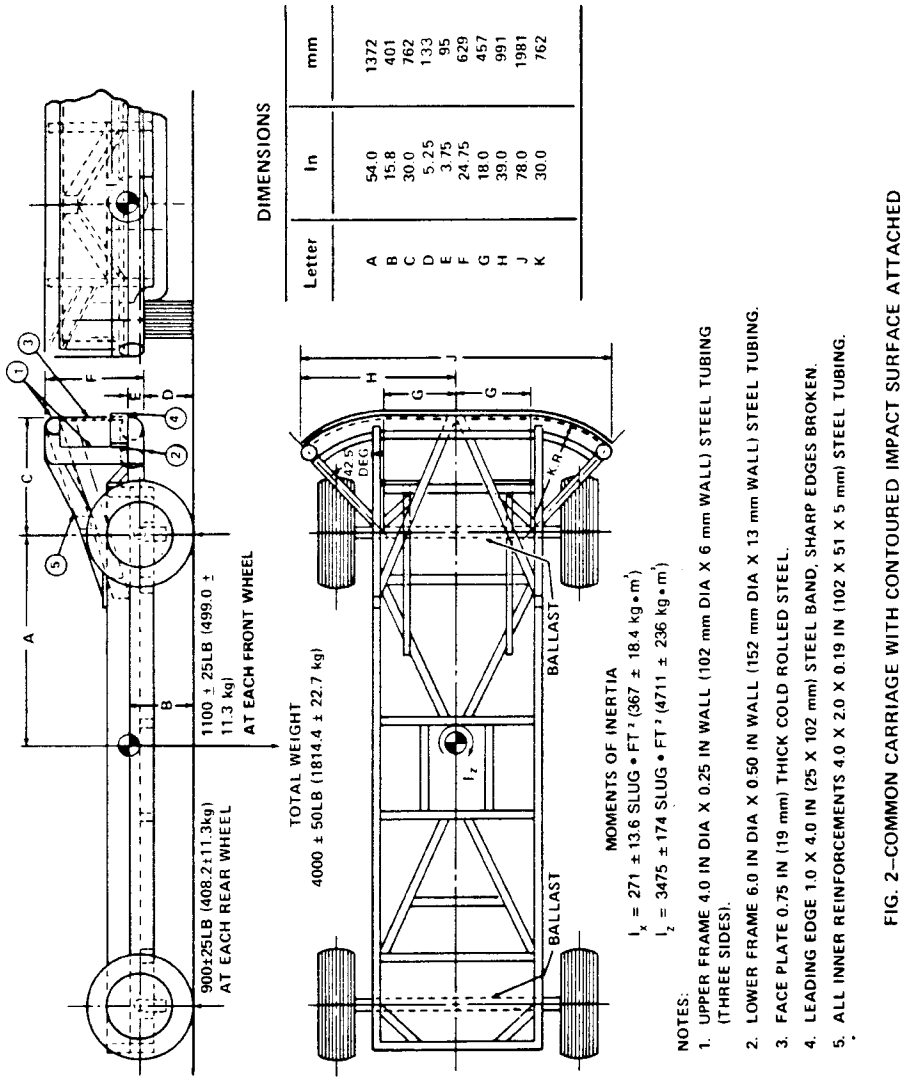

DIMENSIONS		
Letter	In	mm
A	54.0	1372
B	15.8	401
C	30.0	762
D	5.25	133
E	3.75	95
F	24.75	629
G	18.0	457
H	39.0	991
J	78.0	1981
K	30.0	762

FIG. 2—COMMON CARRIAGE WITH CONTOURED IMPACT SURFACE ATTACHED

[40 FR 48353, Oct. 15, 1975. Redesignated and amended at 41 FR 9350, Mar. 4, 1976; 41 FR 36026, 36027, Aug. 26, 1976; 53 FR 8204, Mar. 14, 1988; 53 FR 49990, Dec. 13, 1988; 58 FR 5638, Jan. 22, 1993; 61 FR 19202, May 1, 1996; 63 FR 28953, May 27, 1998]

§ 571.302 Standard No. 302; Flammability of interior materials.

S1. *Scope.* This standard specifies burn resistance requirements for materials used in the occupant compartments of motor vehicles.

S2. *Purpose.* The purpose of this standard is to reduce the deaths and injuries to motor vehicle occupants caused by vehicle fires, especially those originating in the interior of the

vehicle from sources such as matches or cigarettes.

S3. *Application.* This standard applies to passenger cars, multipurpose passenger vehicles, trucks, and buses.

S3A. *Definitions. Occupant compartment air space* means the space within the occupant compartment that normally contains refreshable air.

S4. *Requirements.*

S4.1 The portions described in S4.2 of the following components of vehicle occupant compartments shall meet the requirements of S4.3: Seat cushions, seat backs, seat belts, headlining, convertible tops, arm rests, all trim panels including door, front, rear, and side panels, compartment shelves, head restraints, floor coverings, sun visors, curtains, shades, wheel housing covers, engine compartment covers, mattress covers, and any other interior materials, including padding and crash-deployed elements, that are designed to absorb energy on contact by occupants in the event of a crash.

S4.1.1 [Reserved]

S4.2 Any portion of a single or composite material which is within 13 mm of the occupant compartment air space shall meet the requirements of S4.3.

S4.2.1 Any material that does not adhere to other material(s) at every point of contact shall meet the requirements of S4.3 when tested separately.

S4.2.2 Any material that adheres to other materials at every point of contact shall meet the requirements of S4.3 when tested as a composite with the other material(s).

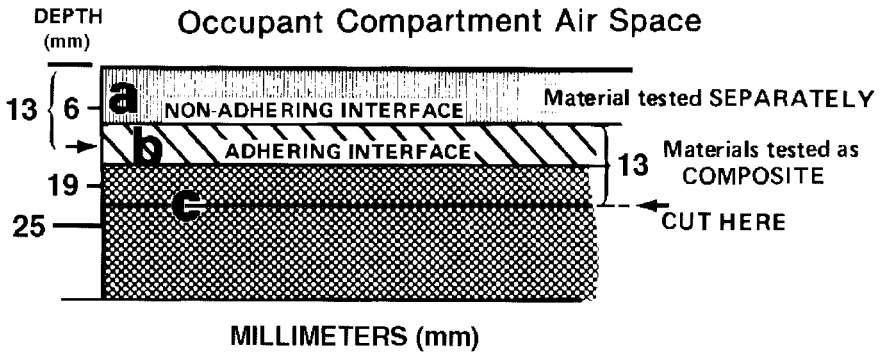

Occupant Compartment Air Space
All Dimensions in Millimeters (mm)

Material A has a non-adhering interface with material B and is tested separately. Part of material B is within 13 mm of the occupant compartment air space, and materials B and C adhere at every point of contact; therefore, B and C are tested as a composite. The cut is in material C as shown, to make a specimen 13 mm thick.

S4.3(a) When tested in accordance with S5, material described in S4.1 and S4.2 shall not burn, nor transmit a flame front across its surface, at a rate of more than 102 mm per minute. The requirement concerning transmission of a flame front shall not apply to a surface created by cutting a test specimen for purposes of testing pursuant to S5.

(b) If a material stops burning before it has burned for 60 seconds from the start of timing, and has not burned more than 51 mm from the point where the timing was started, it shall be considered to meet the burn-rate requirement of S4.3(a).

S5.1 *Conditions.*

S5.1.1 The test is conducted in a metal cabinet for protecting the test specimens from drafts. The interior of the cabinet is 381 mm long, 203 mm deep, and 356 mm high. It has a glass observation window in the front, a closable opening to permit insertion of the specimen holder, and a hole to accommodate tubing for a gas burner. For ventilation, it has a 13 mm clearance space around the top of the cabinet, ten holes in the base of the cabinet, each hole 19 mm in diameter and legs to elevate the bottom of the cabinet by 10 mm, all located as shown in Figure 1.

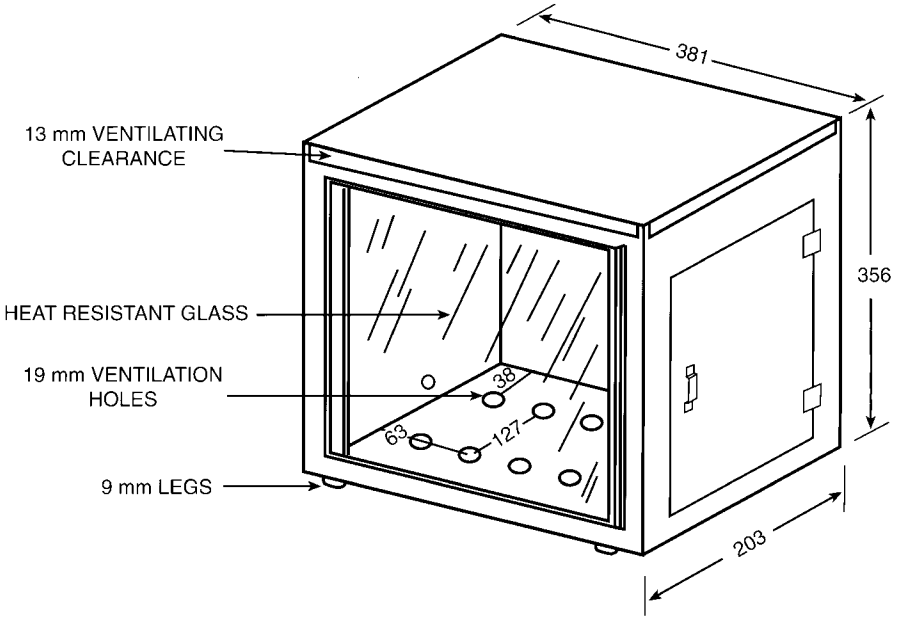

Figure 1
All dimensions in millimeters (mm)

S5.1.2 Prior to testing, each specimen is conditioned for 24 hours at a temperature of 21 °C, and a relative humidity of 50 percent, and the test is conducted under those ambient conditions.

S5.1.3 The test specimen is inserted between two matching U-shaped frames of metal stock 25 mm wide and 10 mm high. The interior dimensions of the U-shaped frames are 51 mm wide by 330 mm long. A specimen that softens and bends at the flaming end so as to cause erratic burning is kept horizontal by supports consisting of thin, heat-resistant wires, spanning the width of the U-shaped frame under the specimen at 25 mm intervals. A device that may be used for supporting this type of material is an additional U-shaped frame, wider than the U-shaped frame containing the specimen, spanned by 10-mil wires of heat-resistant composition at 25 mm intervals, inserted over the bottom U-shaped frame.

S5.1.4 A bunsen burner with a tube of 10 mm inside diameter is used. The gas adjusting valve is set to provide a

flame, with the tube vertical, of 38 mm in height. The air inlet to the burner is closed.

S5.1.5 The gas supplied to the burner has a flame temperature equivalent to that of natural gas.

S5.2 *Preparation of specimens.*

S5.2.1 Each specimen of material to be tested shall be a rectangle 102 mm wide by 356 mm long, wherever possible. The thickness of the specimen is that of the single or composite material used in the vehicle, except that if the material's thickness exceeds 13 mm, the specimen is cut down to that thickness measured from the surface of the specimen closest to the occupant compartment air space. Where it is not possible to obtain a flat specimen because of surface curvature, the specimen is cut to not more than 13 mm in thickness at any point. The maximum available length or width of a specimen is used where either dimension is less than 356 mm or 102 mm, respectively, unless surrogate testing is required under S4.1.1.

S5.2.2 The specimen is produced by cutting the material in the direction that provides the most adverse test results. The specimen is oriented so that the surface closest to the occupant compartment air space faces downward on the test frame.

S5.2.3 Material with a napped or tufted surface is placed on a flat surface and combed twice against the nap with a comb having seven to eight smooth, rounded teeth per 25 mm.

S5.3 *Procedure.*

(a) Mount the specimen so that both sides and one end are held by the U-shaped frame, and one end is even with the open end of the frame. Where the maximum available width of a specimen is not more than 51 mm, so that the sides of the specimen cannot be held in the U-shaped frame, place the specimen in position on wire supports as described in S5.1.3, with one end held by the closed end of the U-shaped frame.

(b) Place the mounted specimen in a horizontal position, in the center of the cabinet.

(c) With the flame adjusted according to S5.1.4, position the bunsen burner and specimen so that the center of the burner tip is 19 mm below the center of the bottom edge of the open end of the specimen.

(d) Expose the specimen to the flame for 15 seconds.

(e) Begin timing (without reference to the period of application of the burner flame) when the flame from the burning specimen reaches a point 38 mm from the open end of the specimen.

(f) Measure the time that it takes the flame to progress to a point 38 mm from the clamped end of the specimen. If the flame does not reach the specified end point, time its progress to the point where flaming stops.

(g) Calculate the burn rate from the formula:

$$B = 60 \times (D/T)$$

Where:

B = Burn rate in millimeters per minute

D = Length the flame travels in millimeters, and

T = Time in seconds for the flame to travel D millimeters.

[36 FR 22902, Dec. 2, 1971, as amended at 40 FR 14319, Mar. 31, 1975; 40 FR 42747, Sept. 16, 1975; 40 FR 56667, Dec. 4, 1975; 63 FR 28954, 28956, May 27, 1998; 63 FR 51003, Sept. 24, 1998]

§ 571.303 Standard No. 303; Fuel system integrity of compressed natural gas vehicles.

S1. *Scope.* This standard specifies requirements for the integrity of motor vehicle fuel systems using compressed natural gas (CNG), including the CNG fuel systems of bi-fuel, dedicated, and dual fuel CNG vehicles.

S2. *Purpose.* The purpose of this standard is to reduce deaths and injuries occurring from fires that result from fuel leakage during and after motor vehicle crashes.

S3. *Application.* This standard applies to passenger cars, multipurpose passenger vehicles, trucks and buses that have a gross vehicle weight rating (GVWR) of 10,000 pounds or less and use CNG as a motor fuel. This standard also applies to school buses regardless of weight that use CNG as a motor fuel.

S4. *Definitions.*

Bi-fuel CNG vehicle means a vehicle equipped with two independent fuel systems, one of which is designed to supply CNG and the second to supply a fuel other than CNG.

CNG fuel container means a container designed to store CNG as motor fuel onboard a motor vehicle.

CNG fuel system means all components used to store or supply CNG to a vehicle's engine.

Dedicated CNG vehicle means a vehicle equipped with one fuel system and designed to operate on CNG.

Dual-fuel CNG vehicle means a vehicle which is fueled by two fuels simultaneously, one of which is CNG and the second is a fuel other than CNG.

High pressure portion of a fuel system means all the components from and including each CNG fuel container up to, but not including, the first pressure regulator.

Service pressure means the internal pressure of a CNG fuel container when filled to design capacity with CNG at 20 °Celsius (68 °Fahrenheit).

S5. *General requirements.*

S5.1 *Vehicle requirements.*

S5.1.1 *Vehicles with GVWR of 10,000 pounds or less.* Each passenger car, multipurpose passenger vehicle, truck, and bus with a GVWR of 10,000 pounds or less that uses CNG as a motor fuel and that is manufactured on or after September 1, 1995 shall meet the requirements of S6, except S6.4.

S5.1.2 *Schoolbuses with a GVWR greater than 10,000 pounds.* Each schoolbus with a GVWR greater than 10,000 pounds that uses CNG as a motor fuel and that is manufactured on or after September 1, 1995 shall meet the requirements of S6.4.

S5.2 *Fuel system pressure drop: barrier crash.*

(a) For all vehicles, the pressure drop in the high pressure portion of the fuel system, expressed in kiloPascals (kPa), in any fixed or moving barrier crash from vehicle impact through the 60 minute period following cessation of motion shall not exceed:

(1) 1062 kPa (154 psi), or

(2) 895 (T/V_{FS}); whichever is higher

where T is the average temperature of the test gas in degrees Kelvin, stabilized to ambient temperature before testing, where average temperature (T) is calculated by measuring ambient temperature at the start of the test time and then every 15 minutes until the test time of 60 minutes is completed; the sum of the ambient temperatures is then divided by five to yield the average temperature (T); and where V_{FS} is the internal volume in liters of the fuel container and the fuel lines up to the first pressure regulator.

(b) For bi-fuel or dual fuel CNG vehicles, the test requirement in S5.2(a) shall apply to the CNG fuel system, and the test requirement of Standard No. 301 shall apply to the other fuel system, if that standard is applicable.

S5.3 Each CNG vehicle shall be permanently labeled, near the vehicle refueling connection, with the information specified in S5.3.1 and S5.3.2 of this section. The information shall be visible to a person standing next to the vehicle during refueling, in English, and in letters and numbers that are not less than 4.76 mm (3/16 inch) high.

S5.3.1 The statement: ''Service pressure _____ kPa (_____ psig).''

S5.3.2 The statement ''See instructions on fuel container for inspection and service life.''

S5.4 When a motor vehicle is delivered to the first purchaser for purposes other than resale, the manufacturer shall provide the purchaser with a written statement of the information in S5.3.1 and S5.3.2 in the owner's manual, or, if there is no owner's manual, on a one-page document. The information shall be in English and in not less than 10 point type.

S6. *Test requirements: fuel system integrity.* Each vehicle with a GVWR of 10,000 pounds or less shall meet the requirements of any applicable barrier crash test. A particular vehicle need not meet further requirements after having been subjected to a single barrier crash test.

S6.1 *Frontal barrier crash.* When the vehicle traveling longitudinally forward at any speed up to and including 30 mph impacts a fixed collision barrier that is perpendicular to the line of travel of the vehicle, or at any angle up to 30 degrees in either direction from the perpendicular to the line of travel of the vehicle, with 50th percentile test dummies as specified in part 572 of this chapter at each front outboard designated seating position and at any other position whose protection system is required to be tested by a dummy under the provisions of Standard No.

208, under the applicable conditions of S7, the fuel pressure drop shall not exceed the limits of S5.2.

S6.2 *Rear moving barrier crash.* When the vehicle is impacted from the rear by a barrier moving at any speed up to and including 30 mph, with test dummies as specified in part 572 of this chapter at each front outboard designated seating position, under the applicable conditions of S7, the fuel pressure drop shall not exceed the limits of S5.2.

S6.3 *Lateral moving barrier crash.* When the vehicle is impacted laterally on either side by a barrier moving at any speed up to and including 20 mph with 50th percentile test dummies as specified in part 572 of this chapter at positions required for testing to Standard No. 208, under the applicable conditions of S7, the fuel pressure drop shall not exceed the limits of S5.2.

S6.4 *Moving contoured barrier crash.* When the moving contoured barrier assembly traveling longitudinally forward at any speed up to and including 30 mph impacts the test vehicle (schoolbus with a GVWR exceeding 10,000 pounds) at any point and angle, under the applicable conditions of S7, the fuel pressure drop shall not exceed the limits of S5.2.

S7. *Test conditions.* The requirements of S5 and S6 shall be met under the following conditions. Where a range of conditions is specified, the vehicle must be capable of meeting the requirements at all points within the range.

S7.1 *General test conditions.* The following conditions apply to all tests.

S7.1.1 Each fuel storage container is filled to 100 percent of service pressure with nitrogen, N_2. The gas pressure shall stabilize to ambient temperature before testing may be conducted.

S7.1.2 After each fuel storage container is filled as specified in S7.1.1, the fuel system other than each fuel storage container is filled with nitrogen, N_2, to normal operating pressures. All manual shutoff valves are to be in the open position.

S7.1.3 In meeting the requirements of S6.1 through S6.4, if the vehicle has an electrically driven fuel pump that normally runs when the vehicle's electrical system is activated, it is operating at the time of the barrier crash. If the vehicle has any high pressure electric shutoff valve that is normally open when the electrical system is activated, it is open at the time of the barrier crash. Furthermore, if any electric shutoff valve prevents sensing of system pressure by the pressure transducer when closed, it must be open for both the initial pressure measurement and the pressure measurement 60 minutes after the vehicle ceases motion from impact. Any valve shall be open for a period of one minute to equalize the system pressure.

S7.1.4 The parking brake is disengaged and the transmission is in neutral, except that in meeting the requirements of S6.4, the parking brake is set.

S7.1.5 Tires are inflated to manufacturer's specifications.

S7.1.6 The vehicle, including test devices and instrumentation, is loaded as follows:

(a) A passenger car, with its fuel system filled as specified in S7.1.1 and S7.1.2, is loaded to its unloaded vehicle weight plus its rated cargo and luggage capacity weight, secured in the luggage area, plus the necessary test dummies as specified in S6, restrained only by means that are installed in the vehicle for protection at its seating position.

(b) A multipurpose passenger vehicle, truck, or bus with a GVWR of 10,000 pounds or less, whose fuel system is filled as specified in S7.1.1 and S7.1.2, is loaded to its unloaded vehicle weight, plus the necessary test dummies as specified in S6, plus 136.1 kilograms (kg.) (300 pounds (lb.)), or its rated cargo and luggage capacity weight, whichever is less, secured to the vehicle and distributed so that the weight on each axle as measured at the tire-ground interface is in proportion to its GAWR. Each dummy shall be restrained only by means that are installed in the vehicle for protection at its seating position.

(c) A schoolbus with a GVWR greater than 10,000 pounds, whose fuel system is filled as specified in S7.1.1 and S7.1.2, is loaded to its unloaded vehicle weight, plus 54.4 kg. (120 lb.) of unsecured weight at each designated seating position.

S7.1.7 The ambient temperature is not to vary more than 5.6 °C (10 °F) during the course of the test.

S7.1.8 The pressure drop measurement specified in S5.2 is to be made using a location on the high pressure side of the fuel system in accordance with the vehicle manufacturer's recommendation.

S7.2 *Lateral moving barrier crash test conditions.* The lateral moving barrier crash test conditions are those specified in S8.2 of Standard No. 208, 49 CFR 571.208.

S7.3 *Rear moving barrier test conditions.* The rear moving barrier test conditions are those specified in S8.2 of Standard No. 208, 49 CFR 571.208, except for the positioning of the barrier and the vehicle. The barrier and test vehicle are positioned so that at impact—

(a) The vehicle is at rest in its normal attitude;

(b) The barrier is traveling at any speed up to and including 30 mph with its face perpendicular to the longitudinal centerline of the vehicle; and

(c) A vertical plane through the geometric center of the barrier impact surface and perpendicular to that surface coincides with the longitudinal centerline of the vehicle.

S7.4 *Moving contoured barrier test conditions.* The moving contoured barrier crash test conditions are those specified in S7.5 of Standard No. 301, 49 CFR 571.301.

[59 FR 19659, Apr. 25, 1994; as amended at 60 FR 2543, Jan. 10, 1995; 60 FR 57948, Nov. 24, 1995]

§ 571.304 Standard No. 304; Compressed natural gas fuel container integrity.

S1. *Scope.* This standard specifies requirements for the integrity of compressed natural gas (CNG), motor vehicle fuel containers.

S2. *Purpose.* The purpose of this standard is to reduce deaths and injuries occurring from fires that result from fuel leakage during and after motor vehicle crashes.

S3. *Application.* This standard applies to each passenger car, multipurpose passenger vehicle, truck, and bus that uses CNG as a motor fuel and to each container designed to store CNG as motor fuel on-board any motor vehicle.

S4. *Definitions.*

Brazing means a group of welding processes wherein coalescence is produced by heating to a suitable temperature above 800 °F and by using a nonferrous filler metal, having a melting point below that to the base metals. The filler metal is distributed between the closely fitted surfaces of the joint by capillary attraction.

Burst pressure means the highest internal pressure reached in a CNG fuel container during a burst test at a temperature of 21 °C (70 °F).

CNG fuel container means a container designed to store CNG as motor fuel on-board a motor vehicle.

Fill pressure means the internal pressure of a CNG fuel container attained at the time of filling. Fill pressure varies according to the gas temperature in the container which is dependent on the charging parameters and the ambient conditions.

Full wrapped means applying the reinforcement of a filament or resin system over the entire liner, including the domes.

Hoop wrapped means winding of filament in a substantially circumferential pattern over the cylindrical portion of the liner so that the filament does not transmit any significant stresses in a direction parallel to the cylinder longitudinal axis.

Hydrostatic pressure means the internal pressure to which a CNG fuel container is taken during testing set forth in S5.4.1.

Liner means the inner gas tight container or gas cylinder to which the overwrap is applied.

Service pressure means the internal settled pressure of a CNG fuel container at a uniform gas temperature of 21 °C (70 °F) and full gas content. It is the pressure for which the container has been constructed under normal conditions.

S5 *Container and material requirements.*

S5.1 *Container designations.* Container designations are as follows:

S5.1.1 *Type 1—Non-composite metallic container* means a metal container.

S5.1.2 *Type 2—Composite metallic hoop wrapped container* means a metal liner reinforced with resin impregnated

continuous filament that is ''hoop wrapped.''

S5.1.3 *Type 3—Composite metallic full wrapped container* means a metal liner reinforced with resin impregnated continuous filament that is ''full wrapped.''

S5.1.4 *Type 4—Composite non-metallic full wrapped container* means resin impregnated continuous filament with a non-metallic liner ''full wrapped.''

S6 *General requirements.*

S6.1 Each passenger car, multipurpose passenger vehicle, truck, and bus that uses CNG as a motor fuel shall be equipped with a CNG fuel container that meets the requirements of S7 through S7.4.

S6.2 Each CNG fuel container manufactured on or after March 27, 1995 shall meet the requirements of S7 through S7.4.

S7 *Test requirements.* Each CNG fuel container shall meet the applicable requirements of S7 through S7.4.

S7.1 *Pressure cycling test at ambient temperature.* Each CNG fuel container shall not leak when tested in accordance with S8.1.

S7.2 *Hydrostatic burst test.*

S7.2.1 Each Type 1 CNG fuel container shall not leak when subjected to burst pressure and tested in accordance with S8.2. Burst pressure shall not be less than 2.25 times the service pressure for non-welded containers and shall not be less than 3.5 times the service pressure for welded containers.

S7.2.2 Each Type 2, Type 3, or Type 4 CNG fuel container shall not leak when subjected to burst pressure and tested in accordance with S8.2. Burst pressure shall be not less than 2.25 times the service pressure.

S7.3 *Bonfire test.* Each CNG fuel container shall be equipped with a pressure relief device. Each CNG fuel container shall completely vent its contents through a pressure relief device or shall not burst while retaining its entire contents when tested in accordance with S8.3.

S7.4 *Labeling.* Each CNG fuel container shall be permanently labeled with the information specified in paragraphs (a) through (h) of this section. Any label affixed to the container in compliance with this section shall remain in place and be legible for the manufacturer's recommended service life of the container. The information shall be in English and in letters and numbers that are at least 6.35 mm (¼ inch) high.

(a) The statement: ''If there is a question about the proper use, installation, or maintenance of this container, contact_____,'' inserting the *CNG fuel container manufacturer's name, address, and telephone number.*

(b) The statement: ''Manufactured in _____,'' inserting the month and year of manufacture of the CNG fuel container.

(c) The statement: ''Service pressure _____ kPa, (_____ psig).''

(d) The symbol DOT, constituting a certification by the CNG container manufacturer that the container complies with all requirements of this standard.

(e) The container designation (e.g., Type 1, 2, 3, 4).

(f) The statement: ''CNG Only.''

(g) The statement: ''This container should be visually inspected after a motor vehicle accident or fire and at least every 36 months or 36,000 miles, whichever comes first, for damage and deterioration.

(h) The statement: ''Do Not Use After _____'' inserting the month and year that mark the end of the manufacturer's recommended service life for the container.

S8 *Test conditions: fuel container integrity.*

S8.1 *Pressure cycling test.* The requirements of S7.1 shall be met under the conditions of S8.1.1 through S8.1.4.

S8.1.1 Hydrostatically pressurize the CNG container to the service pressure, then to not more than 10 percent of the service pressure, for 13,000 cycles.

S8.1.2 After being pressurized as specified in S8.1.1, hydrostatically pressurize the CNG container to 125 percent of the service pressure, then to not more than 10 percent of the service pressure, for 5,000 cycles.

S8.1.3 The cycling rate for S8.1.1 and S8.1.2 shall be any value up to and including 10 cycles per minute.

S8.1.4 The cycling is conducted at ambient temperature.

S8.2 *Hydrostatic burst test.* The requirements of S7.2 shall be met under the conditions of S8.2.1 through S8.2.2.

S8.2.1 Hydrostatically pressurize the CNG fuel container, as follows: The pressure is increased up to the minimum prescribed burst pressure determined in S7.2.1 or S7.2.2, and held constant at the minimum burst pressure for 10 seconds.

S8.2.2 The pressurization rate throughout the test shall be any value up to and including 1,379 kPa (200 psi) per second.

S8.3 *Bonfire test.* The requirements of S7.3 shall be met under the conditions of S8.3.1 through S8.3.7.

S8.3.1 Fill the CNG fuel container with compressed natural gas and test it at:

(a) 100 percent of service pressure; and

(b) 25 percent of service pressure.

S8.3.2 *Container positioning.*

(a) Position the CNG fuel container in accordance with paragraphs (b) and (c) of S8.3.2.

(b) Position the CNG fuel container so that its longitudinal axis is horizontal and its bottom is 100 mm (4 inches) above the fire source.

(c)(1) Position a CNG fuel container that is 1.65 meters (65 inches) in length or less and is fitted with one pressure relief device so that the center of the container is over the center of the fire source.

(2) Position a CNG fuel container that is greater than 1.65 meters (65 inches) in length and is fitted with one pressure relief device at one end of the container so that the center of the fire source is 0.825 meters (32.5 inches) from the other end of the container, measured horizontally along a line parallel to the longitudinal axis of the container.

(3) Position a CNG fuel container that is fitted with pressure relief devices at more than one location along its length so that the portion of container over the center of the fire source is the portion midway between the two pressure relief devices that are separated by the greatest distance, measured horizontally along a line parallel to the longitudinal axis of the container.

(4) Test a CNG fuel container that is greater than 1.65 meters (65 inches) in length, is protected by thermal insulation, and does not have pressure relief devices, twice at 100 percent of service pressure. In one test, position the center of the container over the center of the fire source. In another test, position one end of the container so that the fire source is centered 0.825 meters (32.5 inches) from one end of the container, measured horizontally along a line parallel to the longitudinal axis of the container.

S8.3.3 *Number and placement of thermocouples.* To monitor flame temperature, place three thermocouples so that they are suspended 25 mm (one inch) below the bottom of the CNG fuel container. Position thermocouples so that they are equally spaced over the length of the fire source or length of the container, whichever is shorter.

S8.3.4 *Shielding.*

(a) Use shielding to prevent the flame from directly contacting the CNG fuel container valves, fittings, or pressure relief devices.

(b) To provide the shielding, use steel with 0.6 mm (.025 in) minimum nominal thickness.

(c) Position the shielding so that it does not directly contact the CNG fuel container valves, fittings, or pressure relief devices.

S8.3.5 *Fire source.* Use a uniform fire source that is 1.65 meters long (65 inches). Beginning five minutes after the fire is ignited, maintain an average flame temperature of not less than 430 degrees Celsius (800 degrees Fahrenheit) as determined by the average of the two thermocouples recording the highest temperatures over a 60 second interval:

$$\frac{1}{2}\left[\left(\frac{T_{High\ 1}+T_{High\ 2}}{2}\right)_{@\ time\ 30\ sec}+\left(\frac{T_{High\ 1}+T_{High\ 2}}{2}\right)_{@\ time\ 60\ sec}\right] \geq 430\ ^{o}C$$

If the pressure relief device releases before the end of the fifth minute after ignition, then the minimum temperature requirement does not apply.

S8.3.6 *Recording data*. Record time, temperature, and pressure readings at 30 second intervals, beginning when the fire is ignited and continuing until the pressure release device releases.

S8.3.7 *Duration of exposure to fire source*. The CNG fuel container is exposed to the fire source for 20 minutes after ignition or until the pressure release device releases, whichever period is shorter.

S8.3.8 *Number of tests per container*. A single CNG fuel container is not subjected to more than one bonfire test.

S8.3.9 *Wind velocity*. The average ambient wind velocity at the CNG fuel container during the period specified in S8.3.6 of this standard is not to exceed 2.24 meters/second (5 mph).

S8.3.10 The average wind velocity at the container is any velocity up to and including 2.24 meters/second (5 mph).

[59 FR 49021, Sept. 26, 1994; 59 FR 66776, Dec. 28, 1994; 60 FR 37843, July 24, 1995; 60 FR 57948, Nov. 24, 1995; 61 FR 19204, May 1, 1996; 61 FR 47089, Sept. 6, 1996; 63 FR 66765, Dec. 3, 1998; 65 FR 51772, Aug. 25, 2000; 65 FR 64626, Oct. 30, 2000]

§ 571.305 Standard No. 305; Electric-powered vehicles: electrolyte spillage and electrical shock protection.

S1. *Scope*. This standard specifies requirements for limitation of electrolyte spillage, retention of propulsion batteries during a crash, and electrical isolation of the chassis from the high-voltage system, to be met by vehicles that use electricity as propulsion power .

S2.*Purpose*. The purpose of this standard is to reduce deaths and injuries during a crash which occur because of electrolyte spillage from propulsion batteries, intrusion of propulsion battery system components into the occupant compartment, and electrical shock.

S3 *Application*. This standard applies to passenger cars, and to multipurpose passenger vehicles, trucks and buses with a GVWR of 4536 kg or less, that use more than 48 nominal volts of electricity as propulsion power and whose speed attainable in 1.6 km on a paved level surface is more than 40 km/h.

S4. *Definition*.

Battery system component means any part of a battery module, interconnect, venting system, battery restraint device, and battery box or container which holds the individual battery modules.

Dummy means a 50th percentile male test dummy as specified in subpart F of part 572 of this chapter.

S5. *General requirements*. Each vehicle to which this standard applies, when tested according to S6 under the conditions of S7, must meet the requirements of S5.1, S5.2, and S5.3.

S5.1 *Electrolyte spillage from propulsion batteries*. Not more than 5.0 liters of electrolyte from propulsion batteries shall spill outside the passenger compartment, and no visible trace of electrolyte shall spill into the passenger compartment. Spillage is measured from the time the vehicle ceases motion after a barrier impact test until 30 minutes thereafter, and throughout any static rollover after a barrier impact test.

S5.2 *Battery Retention*. Battery modules located inside the passenger compartment must remain in the location in which they are installed. No part of any battery system component that is located outside the passenger compartment shall enter the passenger compartment during the test procedures of S6 of this standard, as determined by visual inspection.

S5.3 *Electrical isolation*. Electrical isolation between the battery system and the vehicle electricity-conducting structure after each test must be not less than 500 ohms/volt.

S6. *Test requirements*. Each vehicle to which this standard applies, under the conditions of S7, must be capable of meeting the requirements of any applicable single barrier crash/static rollover test sequence, without alteration of the vehicle during the test sequence. A particular vehicle need not meet further test requirements after having been subjected to a single barrier crash/static rollover test sequence.

S6.1 *Frontal barrier crash*. The vehicle must meet the requirements of S5.1, S5.2 and S5.3 when it is traveling longitudinally forward at any speed, up to

and including 48 km/h, and impacts a fixed collision barrier that is perpendicular to the line of travel of the vehicle, or at any angle up to 30 degrees in either direction from the perpendicular to the line of travel of the vehicle.

S6.2 *Rear moving barrier impact.* The vehicle must meet the requirements of S5.1, S5.2, and S5.3, when it is impacted from the rear by a barrier moving at any speed up to and including 48 km/h, with a dummy at each front outboard designated seating position.

S6.3 *Side moving deformable barrier impact.* The vehicle must meet the requirements of S5.1, S5.2, and S5.3 when it is impacted from the side by a barrier that conforms to part 587 of this chapter that is moving at any speed up to and including 54 km/h, with dummies positioned in accordance with S7 of Sec. 571.214 of this chapter.

S6.4 *Post-impact test static rollover.* The vehicle must meet the requirements of S5.1, S5.2, and S5.3, after being rotated on its longitudinal axis to each successive increment of 90 degrees after each impact test specified in S6.1, S6.2, and S6.3.

S7. *Test conditions.* When the vehicle is tested according to S6, the requirements of S5 must be met under the conditions in S7.1 through S7.6.7. Where a range is specified, the vehicle must be capable of meeting the requirements at all points within the range.

S7.1 *Battery state of charge.* The battery system is at the level specified in the following paragraph (a), (b), or (c), as appropriate:

(a) At the maximum state of charge recommended by the manufacturer, as stated in the vehicle operator's manual or on a label that is permanently affixed to the vehicle;

(b) If the manufacturer has made no recommendation, at a state of charge of not less than 95 percent of the maximum capacity of the battery system; or

(c) If the batteries are rechargeable only by an energy source on the vehicle, at any state of charge within the normal operating voltage, as defined by the vehicle manufacturer.

S7.2 *Vehicle conditions.* The switch or device that provides power from the propulsion batteries to the propulsion motor(s) is in the activated position or the ready-to-drive position.

S7.2.1 The parking brake is disengaged and the transmission, if any, is in the neutral position. In a test conducted under S6.3, the parking brake is set.

S7.2.2 Tires are inflated to the manufacturer's specifications.

S7.2.3 The vehicle, including test devices and instrumentation, is loaded as follows:

(a) A passenger car is loaded to its unloaded vehicle weight plus its rated cargo and luggage capacity weight, secured in the luggage area, plus the necessary test dummies as specified in S6, restrained only by means that are installed in the vehicle for protection at its seating position.

(b) A multipurpose passenger vehicle, truck, or bus with a GVWR of 4536 kg or less is loaded to its unloaded vehicle weight plus the necessary dummies, as specified in S6, plus 136 kg or its rated cargo and luggage capacity weight, whichever is less. Each dummy is restrained only by means that are installed in the vehicle for protection at its seating position.

S7.3 *Static rollover test conditions.* In addition to the conditions of S7.1 and S7.2, the conditions of S7.4 of Sec. 571.301 of this chapter apply to the conduct of static rollover tests specified in S6.4.

S7.4 *Rear moving barrier impact test conditions.* In addition to the conditions of S7.1 and S7.2, the conditions of S7.3 of Sec. 571.301 of this chapter apply to the conduct of the rear moving barrier impact test specified in S6.2. The rear moving barrier is described in S8.2 of Sec. 571.208 of this chapter and diagramed in Figure 1 of Sec. 571.301 of this chapter.

S7.5 *Side moving deformable barrier impact test conditions.* In addition to the conditions of S7.1 and S7.2, the conditions of S6.10, S6.11, and S6.12 of Sec. 571.214 of this chapter apply to the conduct of the side moving deformable barrier impact test specified in S6.3.

S7.6 *Electrical isolation test procedure.* In addition to the conditions of S7.1 and S7.2, the conditions in S7.6.1 through S7.6.7 apply to the measurement of electrical isolation specified in S5.3.

S7.6.1 Prior to any barrier impact test, the propulsion battery system is connected to the vehicle's propulsion system, and the vehicle ignition is in the ''on'' (traction (propulsion) system energized) position. If the vehicle utilizes an automatic disconnect between the propulsion battery system and the traction system that is physically contained within the battery pack system, the electrical isolation measurement after the impact is made from the traction side of the automatic disconnect to the vehicle chassis. If the vehicle utilizes an automatic disconnect that is not physically contained within the battery pack system, the electrical isolation measurement after the impact is made from the battery side of the automatic disconnect to the vehicle chassis.

S7.6.2 The voltmeter used in this test measures direct current values and has an internal resistance of at least 10 MΩ

S7.6.3 The voltage is measured as shown in Figure 1 and the propulsion battery voltage (Vb) is recorded. Before any vehicle impact test, Vb is equal to or greater than the nominal operating voltage as specified by the vehicle manufacturer.

S7.6.4 The voltage is measured as shown in Figure 2, and the voltage (V1) between the negative side of the propulsion battery and the vehicle chassis is recorded.

S7.6.5 The voltage is measured as shown in Figure 3, and the voltage (V2) between the positive side of the propulsion battery and the vehicle chassis is recorded.

S7.6.6 If V1 is greater than or equal to V2, insert a known resistance (Ro) between the negative side of the propulsion battery and the vehicle chassis. With the Ro installed, measure the voltage (V1') as shown in Figure 4 between the negative side of the propulsion battery and the vehicle chassis. Calculate the electrical isolation (Ri) according to the formula shown. This electrical isolation value (in ohms) divided by the nominal operating voltage of the propulsion battery (in volts) must be equal to or greater than 500.

S7.6.7 If V2 is greater than V1, insert a known resistance (Ro) between the positive side of the propulsion battery and the vehicle chassis. With the Ro installed, measure the voltage and record the voltage (V2') between the positive side of the propulsion battery and the vehicle chassis as shown in Figure 5. Calculate the electrical isolation (Ri) according to the formula shown. This electrical isolation value (in ohms) divided by the nominal operating voltage of the propulsion battery (in volts) must be equal to or greater than 500.

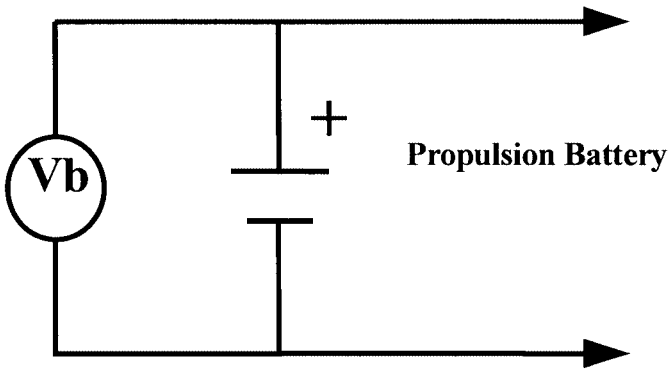

Figure 1. S7.6.3 Measurement Location For Vb Voltage

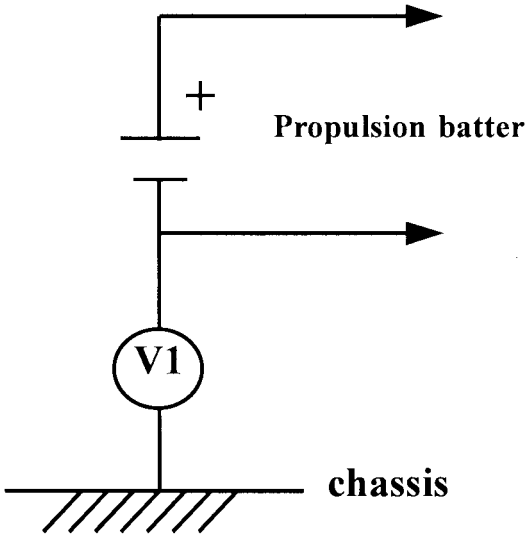

Figure 2. S7.6.4 Measurement Location For V1 Voltage

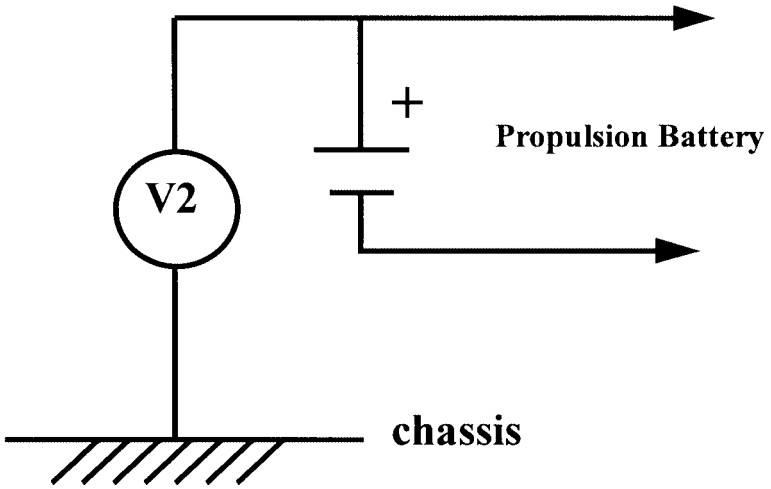

Figure 3. S7.6.5 Measurement Location For V2 Voltage

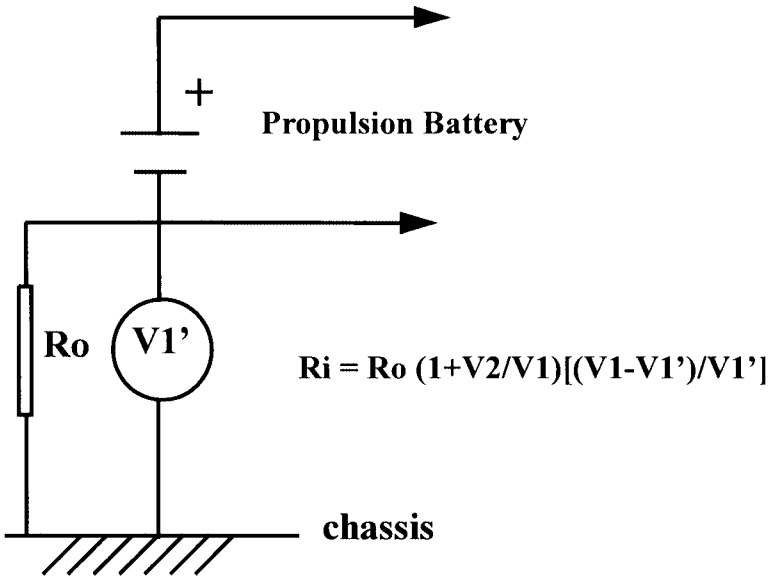

Figure 4. S7.6.6 Measurement Location For V1' Voltage

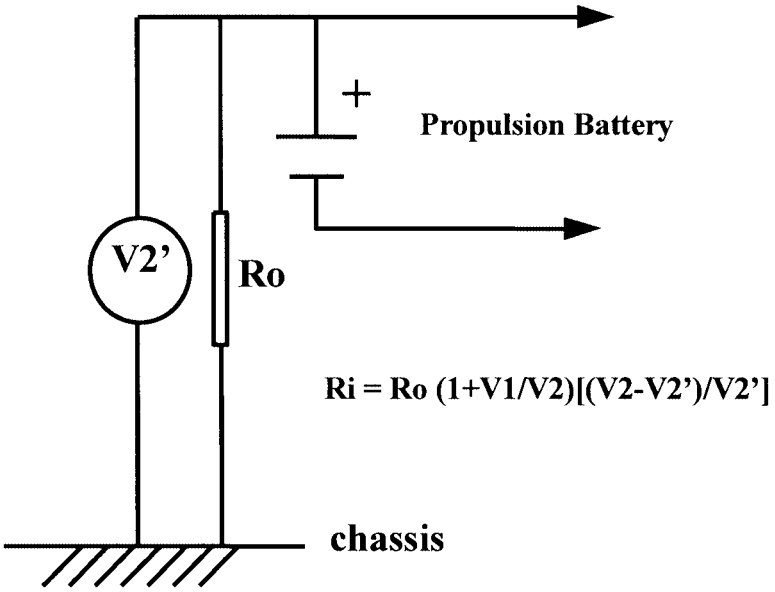

Figure 5. S7.6.7 Measurement Location For V2' Voltage

[65 FR 57988, Sept. 27, 2000, as amended at 66 FR 60160, Dec. 3, 2001]

§ 571.401 Standard No. 401; Interior trunk release.

S1. *Purpose and scope.* This standard establishes the requirement for providing a trunk release mechanism that makes it possible for a person trapped inside the trunk compartment of a passenger car to escape from the compartment.

S2. *Application.* This standard applies to passenger cars that have a trunk compartment. This standard does not apply to passenger cars with a back door.

S3. *Definitions.*

Back door means a door or door system on the back end of a passenger car through which cargo can be loaded or unloaded. The term includes the hinged back door on a hatchback or a station wagon.

Trunk compartment. (a) Means a space that:

(1) Is intended to be used for carrying luggage or cargo,

(2) Is wholly separated from the occupant compartment of a passenger car by a permanently attached partition or by a fixed or fold-down seat back and/or partition,

(3) Has a trunk lid, and

(4) Is large enough so that the three-year-old child dummy described in Subpart C of Part 572 can be placed inside the trunk compartment, and the trunk lid can be closed and latched with all removable equipment furnished by the passenger car manufacturer stowed in accordance with label(s) on the passenger car or information in the passenger car owner's manual, or, if no information is provided, as located when the passenger car is delivered. (Note: For purposes of this standard, the Part 572 Subpart C test dummy need not be equipped with the accelerometers specified in § 572.21.)

(b) Does not include a sub-compartment within the trunk compartment.

Trunk lid means a moveable body panel that is not designed or intended as a passenger car entry point for passengers and that provides access from outside a passenger car to a trunk compartment. The term does not include a back door or the lid of a storage compartment located inside the passenger compartment of a passenger car.

S4. *Requirements.*

S4.1 Each passenger car with a trunk compartment must have an automatic or manual release mechanism inside the trunk compartment that unlatches the trunk lid. Each trunk release shall conform, at the manufacturer's option, to either S4.2(a) and S4.3, or S4.2(b) and S4.3. The manufacturer shall select the option by the time it certifies the vehicle and may not thereafter select a different option for the vehicle.

S4.2(a) Each manual release mechanism installed pursuant to S4.1 of this standard must include a feature, like lighting or phosphorescence, that allows the release mechanism to be easily seen inside the closed trunk compartment.

(b) Each automatic release mechanism installed pursuant to S4.1 of this section must unlatch the trunk lid within 5 minutes of when the trunk lid is closed with a person inside the trunk compartment.

S4.3(a) Except as provided in paragraph S4.3(b), actuation of the release mechanism required by S4.1 of this standard must completely release the trunk lid from all latching positions of the trunk lid latch.

(b)(1) For passenger cars with a front trunk compartment that has a front opening trunk lid required to have a secondary latching position or latch system, actuation of the release mechanism required by paragraph S4.1 of this standard must result in the following:

(i) When the passenger car is stationary, the release mechanism must release the trunk lid from all latching positions or latch systems;

(ii) When the passenger car is moving forward at a speed less than 5 km/h, the release mechanism must release the trunk lid from the primary latching position or latch system, and may release the trunk lid from all latching positions or latch systems;

(iii) When the passenger car is moving forward at a speed of 5 km/h or greater, the release mechanism must release the trunk lid from the primary latching position or latch system, but must not release the trunk lid from the secondary latching position or latch system.

(2) The passenger cars described in paragraph S4.3(b)(1) are excluded from the requirements of this standard until September 1, 2002.

[66 FR 43121, Aug. 17, 2001, as amended at 67 FR 19523, Apr. 22, 2002]

§ 571.500 Standard No. 500; Low-speed vehicles.

S1. *Scope.* This standard specifies requirements for low-speed vehicles.

S2. *Purpose.* The purpose of this standard is to ensure that low-speed vehicles operated on the public streets, roads, and highways are equipped with the minimum motor vehicle equipment appropriate for motor vehicle safety.

S3. *Applicability.* This standard applies to low-speed vehicles.

S4. [Reserved.]

S5. *Requirements.*

(a) When tested in accordance with test conditions in S6 and test procedures in S7, the maximum speed attainable in 1.6 km (1 mile) by each low-speed vehicle shall not more than 40 kilometers per hour (25 miles per hour).

(b) Each low-speed vehicle shall be equipped with:

(1) Headlamps,

(2) Front and rear turn signal lamps,

(3) Taillamps,

(4) Stop lamps,

(5) Reflex reflectors: one red on each side as far to the rear as practicable, and one red on the rear,

(6) An exterior mirror mounted on the driver's side of the vehicle and either an exterior mirror mounted on the passenger's side of the vehicle or an interior mirror,

(7) A parking brake,

(8) A windshield of AS–1 or AS–5 composition, that conforms to the American National Standard Institute's ''Safety Code for Safety Glazing Materials for Glazing Motor Vehicles Operating on Land Highways,'' Z-26.1–1977, January 28, 1977, as supplemented by

Z26.1a, July 3, 1980 (incorporated by reference; see 49 CFR 571.5),

(9) A VIN that conforms to the requirements of part 565 *Vehicle Identification Number* of this chapter, and

(10) A Type 1 or Type 2 seat belt assembly conforming to Sec. 571.209 of this part, Federal Motor Vehicle Safety Standard No. 209, *Seat belt assemblies*, installed at each designated seating position.

S6. *General test conditions*. Each vehicle must meet the performance limit specified in S5(a) under the following test conditions.

S6.1. *Ambient conditions*.

S6.1.1. *Ambient temperature*. The ambient temperature is any temperature between 0 °C (32 °F) and 40 °C (104 °F).

S6.1.2. *Wind speed*. The wind speed is not greater than 5 m/s (11.2 mph).

S6.2. *Road test surface*.

S6.2.1. *Pavement friction*. Unless otherwise specified, the road test surface produces a peak friction coefficient (PFC) of 0.9 when measured using a standard reference test tire that meets the specifications of American Society for Testing and Materials (ASTM) E1136, ''Standard Specification for A Radial Standard Reference Test Tire,'' in accordance with ASTM Method E 1337–90, ''Standard Test Method for Determining Longitudinal Peak Braking Coefficient of Paved Surfaces Using a Standard Reference Test Tire,'' at a speed of 64.4 km/h (40.0 mph), without water delivery (incorporated by reference; see 49 CFR 571.5).

S6.2.2. *Gradient*. The test surface has not more than a 1 percent gradient in the direction of testing and not more than a 2 percent gradient perpendicular to the direction of testing.

S6.2.3. *Lane width*. The lane width is not less than 3.5 m (11.5 ft).

S6.3. *Vehicle conditions*.

S6.3.1. The test weight for maximum speed is unloaded vehicle weight plus a mass of 78 kg (170 pounds), including driver and instrumentation.

S6.3.2. No adjustment, repair or replacement of any component is allowed after the start of the first performance test.

S6.3.3. *Tire inflation pressure*. Cold inflation pressure is not more than the maximum permissible pressure molded on the tire sidewall.

S6.3.4. *Break-in*. The vehicle completes the manufacturer's recommended break-in agenda as a minimum condition prior to beginning the performance tests.

S6.3.5. *Vehicle openings*. All vehicle openings (doors, windows, hood, trunk, convertible top, cargo doors, etc.) are closed except as required for instrumentation purposes.

S6.3.6. *Battery powered vehicles*. Prior to beginning the performance tests, propulsion batteries are at the state of charge recommended by the manufacturer or, if the manufacturer has made no recommendation, at a state of charge of not less than 95 percent. No further charging of any propulsion battery is permissible.

S7. *Test procedure*. Each vehicle must meet the performance limit specified in S5(a) under the following test procedure. The maximum speed performance is determined by measuring the maximum attainable vehicle speed at any point in a distance of 1.6 km (1.0 mile) from a standing start and repeated in the opposite direction within 30 minutes.

[63 FR 33216, June 17, 1998]

PART 572—ANTHROPOMORPHIC TEST DEVICES

Subpart A—General

Sec.
572.1 Scope.
572.2 Purpose.
572.3 Application.
572.4 Terminology.

Subpart B—50th Percentile Male

572.5 General description.
572.6 Head.
572.7 Neck.
572.8 Thorax.
572.9 Lumbar spine, abdomen, and pelvis.
572.10 Limbs.
572.11 Test conditions and instrumentation.

Subpart C—3-Year-Old Child

572.15 General description.
572.16 Head.
572.17 Neck.
572.18 Thorax.
572.19 Lumbar spine, abdomen and pelvis.
572.20 Limbs.
572.21 Test conditions and instrumentation.

Subpart D—6-Month-Old Infant

572.25 General description.

Subpart E—Hybrid III Test Dummy

572.30 Incorporated materials.
572.31 General description.
572.32 Head.
572.33 Neck.
572.34 Thorax.
572.35 Limbs.
572.36 Test conditions and instrumentation.

Subpart F—Side Impact Dummy 50th Percentile Male

572.40 Incorporated materials.
572.41 General description.
572.42 Thorax.
572.43 Lumbar spine and pelvis.
572.44 Instrumentation and test conditions.
APPENDIX A TO SUBPART F

Subparts G–H [Reserved]

Subpart I—6-Year-Old Child

572.70 Incorporation by reference.
572.71 General description.
572.72 Head assembly and test procedure.
572.73 Neck assembly and test procedure.
572.74 Thorax assembly and test procedure.
572.75 Lumbar spine, abdomen, and pelvis assembly and test procedure.
572.76 Limbs assembly and test procedure.
572.77 Instrumentation.
572.78 Performance test conditions.
FIGURES TO SUBPART I

Subpart J—9-Month Old Child

572.80 Incorporated materials.
572.81 General description.
572.82 Head.
572.83 Head-neck.
572.84 Thorax.
572.85 Lumbar spine flexure.
572.86 Test conditions and dummy adjustment.

Subpart K—Newborn Infant

572.90 Incorporation by reference.
572.91 General description.

Subpart L—Free Motion Headform

572.100 Incorporation by reference.
572.101 General description.
572.102 Drop test.
572.103 Test conditions and instrumentation.

Subpart M—Side Impact Hybrid Dummy 50th Percentile Male.

572.110 Materials incorporated by reference.
572.111 General description.
572.112 Head assembly.
572.113 Neck assembly.
572.114 Thorax.
572.115 Lumbar spine and pelvis.
572.116 Instrumentation and test conditions.

Subpart N—Six-year-old Child Test Dummy, Beta Version

572.120 Incorporation by reference.
572.121 General description.
572.122 Head assembly and test procedure.
572.123 Neck assembly and test procedure.
572.124 Thorax assembly and test procedure.
572.125 Upper and lower torso assemblies and torso flexion test procedure.
572.126 Knees and knee impact test procedure.
572.127 Test conditions and instrumentation.
FIGURES TO SUBPART N

Subpart O—Hybrid III 5th Percentile Female Test Dummy, Alpha Version

572.130 Incorporation by reference.
572.131 General description.
572.132 Head assembly and test procedure.
572.133 Neck assembly and test procedure.
572.134 Thorax assembly and test procedure.
572.135 Upper and lower torso assemblies and torso flexion test procedure.
572.136 Knees and knee impact test procedure.
572.137 Test conditions and instrumentation.
FIGURES TO SUBPART O

Subpart P—Hybrid III 3-Year-Old Child Crash Test Dummy, Alpha Version

572.140 Incorporation by reference.
572.141 General description.
572.142 Head assembly and test procedure.
572.143 Neck-headform assembly and test procedure.
572.144 Thorax assembly and test procedure.
572.145 Upper and lower torso assemblies and torso flexion test procedure.
572.146 Test condition and instrumentation.
FIGURES TO SUBPART P

Subpart R—CRABI 12-Month-Old Infant Crash Test Dummy, Alpha Version

572.150 Incorporation by reference.
572.151 General description.
572.152 Head assembly and test procedure.
572.153 Neck-headform assembly and test procedure.
572.154 Thorax assembly and test procedure.
572.155 Test condition and instrumentation.
FIGURES TO SUBPART R

AUTHORITY: 49 U.S.C. 322, 30111, 30115, 30117 and 30166; delegation of authority at 49 CFR 1.50.

EDITORIAL NOTE: For compliance provisions relating to a vehicle's conformance with the performance requirements of Standard No. 208 (§ 571.208) relating to the part 572 test dummy, see the ''Effective Date Note'' at subpart E of this part.

Subpart A—General

§ 572.1 Scope.

This part describes the anthropomorphic test devices that are to be used for compliance testing of motor vehicles and motor vehicle equipment with motor vehicle safety standards.

[60 FR 43058, Aug. 18, 1995]

§ 572.2 Purpose.

The design and performance criteria specified in this part are intended to describe measuring tools with sufficient precision to give repetitive and correlative results under similar test conditions and to reflect adequately the protective performance of a vehicle or item of motor vehicle equipment with respect to human occupants.

[38 FR 20451, Aug. 1, 1973, as amended at 42 FR 7151, Feb. 7, 1977]

§ 572.3 Application.

This part does not in itself impose duties or liabilities on any person. It is a description of tools that measure the performance of occupant protection systems required by the safety standards that incorporate it. It is designed to be referenced by, and become a part of, the test procedures specified in motor vehicle safety standards such as Standard No. 208, Occupant Crash Protection.

[38 FR 20451, Aug. 1, 1973, as amended at 42 FR 7152, Feb. 7, 1977]

§ 572.4 Terminology.

(a) The term *dummy*, when used in this subpart A, refers to any test device described by this part. The term *dummy*, when used in any other subpart of this part, refers to the particular dummy described in that part.

(b) Terms describing parts of the dummy, such as *head*, are the same as names for corresponding parts of the human body.

(c) The term *unimodal*, when used in subparts C and I, refers to an acceleration-time curve which has only one prominent peak.

[38 FR 20451, Aug. 1, 1973, as amended at 42 FR 7152, Feb. 7, 1977; 44 FR 76530, Dec. 27, 1979; 56 FR 57836, Nov. 14, 1991]

Subpart B—50th Percentile Male

§ 572.5 General description.

(a) The dummy consists of the component assemblies specified in Figure 1, which are described in their entirety by means of approximately 250 drawings and specifications that are grouped by component assemblies under the following nine headings:

SA 150 M070—Right arm assembly
SA 150 M071—Left arm assembly
SA 150 M050—Lumbar spine assembly
SA 150 M060—Pelvis and abdomen assembly
SA 150 M080—Right leg assembly
SA 150 M081—Left leg assembly
SA 150 M010—Head assembly
SA 150 M020—Neck assembly
SA 150 M030—Shoulder-thorax assembly.

(b) The drawings and specifications referred to in this regulation that are not set forth in full are hereby incorporated in this part by reference. These materials are thereby made part of this regulation. The Director of the Federal Register has approved the materials incorporated by reference. For materials subject to change, only the specific version approved by the Director of the Federal Register and specified in the regulation are incorporated. A notice of any change will be published in the FEDERAL REGISTER. As a convenience to the reader, the materials incorporated by reference are listed in the Finding Aid Table found at the end of this volume of the Code of Federal Regulations.

(c) The materials incorporated by reference are available for examination in Docket 73–08, Docket Section, National Highway Traffic Safety Administration, Room 5109, 400 Seventh Street SW., Washington, DC, 20590. Copies may be obtained from Rowley-Scher Reprographics, Inc., 1216 K Street NW., Washington, DC 20005 ((202) 628–6667). The drawings and specifications are also on file in the reference

library of the Office of the Federal Register, National Archives and Records Administration, Washington, DC.

(d) Adjacent segments are joined in a manner such that throughout the range of motion and also under crash impact conditions there is no contact between metallic elements except for contacts that exist under static conditions.

(e) The structural properties of the dummy are such that the dummy conforms to this part in every respect both before and after being used in vehicle tests specified in Standard No. 208 of this chapter (571.208).

(f) A specimen of the dummy is available for surface measurements and access can be arranged by contacting: Office of Vehicle Safety Standards, National Highway Traffic Safety Administration, 400 Seventh Street, SW., Washington, DC 20590.

[50 FR 25423, June 19, 1985]

§ 572.6 Head.

(a) The head consists of the assembly shown as number SA 150 M010 in Figure 1 and conforms to each of the drawings subtended by number SA 150 M010.

(b) When the head is dropped from a height of 10 inches in accordance with paragraph (c) of this section, the peak resultant accelerations at the location of the accelerometers mounted in the head form in accordance with § 572.11(b) shall be not less than 210g, and not more than 260g. The acceleration/time curve for the test shall be unimodal and shall lie at or above the 100g level for an interval not less than 0.9 milliseconds and not more than 1.5 milliseconds. The lateral acceleration vector shall not exceed 10g.

(c) Test procedure:

(1) Suspend the head as shown in Figure 2, so that the lowest point on the forehead is 0.5 inches below the lowest point on the dummy's nose when the midsagittal plane is vertical.

(2) Drop the head from the specified height by means that ensures instant release onto a rigidly supported flat horizontal steel plate, 2 inches thick and 2 feet square, which has a clean, dry surface and any microfinish of not less than 8 microinches (rms) and not more than 80 microinches (rms).

(3) Allow a time period of at least 2 hours between successive tests on the same head.

[38 FR 20451, Aug. 1, 1973, as amended at 42 FR 7152, Feb. 7, 1977]

§ 572.7 Neck.

(a) The neck consists of the assembly shown as number SA 150 M020 in Figure 1 and conforms to each of the drawings subtended by number SA 150 M020.

(b) When the neck is tested with the head in accordance with paragraph (c) of this section, the head shall rotate in reference to the pendulum's longitudinal centerline a total of 68°±5° about its center of gravity, rotating to the extent specified in the following table at each indicated point in time, measured from impact, with a chordal displacement measured at its center of gravity that is within the limits specified. The chordal displacement at time T is defined as the straight line distance between (1) the position relative to the pendulum arm of the head center of gravity at time zero, and (2) the position relative to the pendulum arm of the head center of gravity at time T as illustrated by Figure 3. The peak resultant acceleration recorded at the location of the accelerometers mounted in the head form in accordance with § 572.11(b) shall not exceed 26g. The pendulum shall not reverse direction until the head's center of gravity returns to the original zero time position relative to the pendulum arm.

Rotation (degrees)	Time (ms)± (2+.08T)	Chordal Displacement (inches±0.5)
0	0	0.0
30	30	2.6
60	46	4.8
Maximum	60	5.5
60	75	4.8
30	95	2.6
0	112	0.0

(c) Test procedure: (1) Mount the head and neck on a rigid pendulum as specified in Figure 4, so that the head's midsagittal plane is vertical and coincides with the plane of motion of the pendulum's longitudinal centerline. Mount the neck directly to the pendulum as shown in Figure 4.

(2) Release the pendulum and allow it to fall freely from a height such that the velocity at impact is 23.5±2.0 feet

per second (fps), measured at the center of the accelerometer specified in Figure 4.

(3) Decelerate the pendulum to a stop with an acceleration-time pulse described as follows:

(i) Establish 5g and 20g levels on the a–t curve.

(ii) Establish t_1 at the point where the rising a–t curve first crosses the 5g level, t_2 at the point where the rising a–t curve first crosses the 20g level, t_2 at the point where the decaying a–t curve last crosses the 20g level, and t_4 at the point where the decaying a–t curve first crosses the 5g level.

(iii) t_2–t_1 shall be not more than 3 milliseconds.

(iv) t_3–t_2 shall be not less than 25 milliseconds and not more than 30 milliseconds.

(v) t_4–t_3 shall be not more than 10 milliseconds.

(vi) The average deceleration between t_2 and t_3 shall be not less than 20g and not more than 24g.

(4) Allow the neck to flex without impact of the head or neck with any object other than the pendulum arm.

[38 FR 20451, Aug. 1, 1973, as amended at 42 FR 7152, Feb. 7, 1977; 42 FR 12176, Mar. 3, 1977; 45 FR 40596, June 16, 1980]

§ 572.8 Thorax.

(a) The thorax consists of the assembly shown as number SA 150 M030 in Figure 1, and conforms to each of the drawings subtended by number SA 150 M030.

(b) The thorax contains enough unobstructed interior space behind the rib cage to permit the midpoint of the sternum to be depressed 2 inches without contact between the rib cage and other parts of the dummy or its instrumentation, except for instruments specified in paragraph (d)(7) of this section.

(c) When impacted by a test probe conforming to § 572.11(a) at 14 fps and at 22 fps in accordance with paragraph (d) of this section, the thorax shall resist with forces measured by the test probe of not more than 1450 pounds and 2250 pounds, respectively, and shall deflect by amounts not greater than 1.1 inches and 1.7 inches, respectively. The internal hysteresis in each impact shall not be less than 50 percent and not more than 70 percent.

(d) Test procedure: (1) With the dummy seated without back support on a surface as specified in § 572.11(i) and in the orientation specified in § 572.11(i), adjust the dummy arms and legs until they are extended horizontally forward parallel to the midsagittal plane.

(2) Place the longitudinal center line of the test probe so that it is 17.7±0.1 inches above the seating surface at impact.

(3) Align the test probe specified in § 572.11(a) so that at impact its longitudinal centerline coincides within 2 degrees of a horizontal line in the dummy's midsagittal plane.

(4) Adjust the dummy so that the surface area on the thorax immediately adjacent to the projected longitudinal center line of the test probe is vertical. Limb support, as needed to achieve and maintain this orientation, may be provided by placement of a steel rod of any diameter not less than one-quarter of an inch and not more than three-eighths of an inch, with hemispherical ends, vertically under the limb at its projected geometric center.

(5) Impact the thorax with the test probe so that its longitudinal centerline falls within 2 degrees of a horizontal line in the dummy's midsagittal plane at the moment of impact.

(6) Guide the probe during impact so that it moves with no significant lateral, vertical, or rotational movement.

(7) Measure the horizontal deflection of the sternum relative to the thoracic spine along the line established by the longitudinal centerline of the probe at the moment of impact, using a potentiometer mounted inside the sternum.

(8) Measure hysteresis by determining the ratio of the area between the loading and unloading portions of the force deflection curve to the area under the loading portion of the curve.

[38 FR 20451, Aug. 1, 1973, as amended at 42 FR 7152, Feb. 7, 1977]

§ 572.9 Lumbar spine, abdomen, and pelvis.

(a) The lumbar spine, abdomen, and pelvis consist of the assemblies designated as numbers SA 150 M050 and SA

150 M060 in Figure 1 and conform to the drawings subtended by these numbers.

(b) When subjected to continuously applied force in accordance with paragraph (c) of this section, the lumbar spine assembly shall flex by an amount that permits the rigid thoracic spine to rotate from its initial position in accordance with Figure 11 by the number of degrees shown below at each specified force level, and straighten upon removal of the force to within 12 degrees of its initial position in accordance with Figure 11.

Flexion (degrees)	Force (±6 pounds)
0	0
20	28
30	40
40	52

(c) Test procedure: (1) Assemble the thorax, lumbar spine, pelvic, and upper leg assemblies (above the femur force transducers), ensuring that all component surfaces are clean, dry, and untreated unless otherwise specified, and attach them to the horizontal fixture shown in Figure 5 at the two link rod pins and with the mounting brackets for the lumbar test fixtures illustrated in Figures 6 to 9.

(2) Attach the rear mounting of the pelvis to the pelvic instrument cavity rear face at the four ¼″ cap screw holes and attach the front mounting at the femur axial rotation joint. Tighten the mountings so that the pelvic-lumbar adapter is horizontal and adjust the femur friction plungers at each hip socket joint to 240 inch-pounds torque.

(3) Flex the thorax forward 50° and then rearward as necessary to return it to its initial position in accordance with Figure 11 unsupported by external means.

(4) Apply a forward force perpendicular to the thorax instrument cavity rear face in the midsagittal plane 15 inches above the top surface of the pelvic-lumbar adapter. Apply the force at any torso deflection rate between .5 and 1.5 degrees per second up to 40° of flexion but no further, continue to apply for 10 seconds that force necessary to maintain 40° of flexion, and record the force with an instrument mounted to the thorax as shown in Figure 5. Release all force as rapidly as possible and measure the return angle 3 minutes after the release.

(d) When the abdomen is subjected to continuously applied force in accordance with paragraph (e) of this section, the abdominal force-deflection curve shall be within the two curves plotted in Figure 10.

(e) Test procedure: (1) Place the assembled thorax, lumbar spine and pelvic assemblies in a supine position on a flat, rigid, smooth, dry, clean horizontal surface, ensuring that all component surfaces are clean, dry, and untreated unless otherwise specified.

(2) Place a rigid cylinder 6 inches in diameter and 18 inches long transversely across the abdomen, so that the cylinder is symmetrical about the midsagittal plane, with its longitudinal centerline horizontal and perpendicular to the midsagittal plane at a point 9.2 inches above the bottom line of the buttocks, measured with the dummy positioned in accordance with Figure 11.

(3) Establish the zero deflection point as the point at which a force of 10 pounds has been reached.

(4) Apply a vertical downward force through the cylinder at any rate between 0.25 and 0.35 inches per second.

(5) Guide the cylinder so that it moves without significant lateral or rotational movement.

[42 FR 7152, Feb. 7, 1977]

§ 572.10 Limbs.

(a) The limbs consist of the assemblies shown as numbers SA 150 M070, SA 150 M071, SA 150 M080, and SA 150 M081 in Figure 1 and conform to the drawings subtended by these numbers.

(b) When each knee is impacted at 6.9 ft/sec. in accordance with paragraph (c) of this section, the maximum force on the femur shall be not more than 2500 pounds and not less than 1850 pounds, with a duration above 1000 pounds of not less than 1.7 milliseconds.

(c) Test procedure: (1) Seat the dummy without back support on a surface as specified in § 572.11(i) that is 17.3±0.2 inches above a horizontal surface, oriented as specified in § 572.11(i), and with the hip joint adjustment at any setting between 1g and 2g. Place the dummy legs in planes parallel to

its midsagittal plane (knee pivot centerline perpendicular to the midsagittal plane) and with the feet flat on the horizontal surface. Adjust the feet and lower legs until the lines between the midpoints of the knee pivots and the ankle pivots are at any angle not less than 2 degrees and not more than 4 degrees rear of the vertical, measured at the centerline of the knee pivots.

(2) Reposition the dummy if necessary so that the rearmost point of the lower legs at the level one inch below the seating surface remains at any distance not less than 5 inches and not more than 6 inches forward of the forward edge of the seat.

(3) Align the test probe specified in § 572.11(a) so that at impact its longitudinal centerline coincides within ±2° with the longitudinal centerline of the femur.

(4) Impact the knee with the test probe moving horizontally and parallel to the midsagittal plane at the specified velocity.

(5) Guide the probe during impact so that it moves with no significant lateral, vertical, or rotational movement.

[38 FR 20451, Aug. 1, 1973, as amended at 42 FR 7153, Feb. 7, 1977]

§ 572.11 Test conditions and instrumentation.

(a) The test probe used for thoracic and knee impact tests is a cylinder 6 inches in diameter that weighs 51.5 pounds including instrumentation. Its impacting end has a flat right face that is rigid and that has an edge radius of 0.5 inches.

(b) Accelerometers are mounted in the head on the horizontal transverse bulkhead shown in the drawings subreferenced under assembly No. SA 150 M010 in Figure 1, so that their sensitive axes intersect at a point in the midsagittal plane 0.5 inches above the horizontal bulkhead and 1.9 inches ventral of the vertical mating surface of the skull with the skull cover. One accelerometer is aligned with its sensitive axis perpendicular to the horizontal bulkhead in the midsagittal plane and with its seismic mass center at any distance up to 0.3 inches superior to the axial intersection point. Another accelerometer is aligned with its sensitive axis parallel to the horizontal bulkhead and perpendicular to the midsagittal plane, and with its seismic mass center at any distance up to 1.3 inches to the left of the axial intersection point (left side of dummy is the same as that of man). A third accelerometer is aligned with its sensitive axis parallel to the horizontal bulkhead in the midsagittal plane, and with its seismic mass center at any distance up to 1.3 inches dorsal to the axial intersection point.

(c) Accelerometers are mounted in the thorax by means of a bracket attached to the rear vertical surface (hereafter ''attachment surface'') of the thoracic spine so that their sensitive axes intersect at a point in the midsagittal plane 0.8 inches below the upper surface of the plate to which the neck mounting bracket is attached and 3.2 inches perpendicularly forward of the surface to which the accelerometer bracket is attached. One accelerometer has its sensitive axis oriented parallel to the attachment surface in the midsagittal plane, with its seismic mass center at any distance up to 1.3 inches inferior to the intersection of the sensitive axes specified above. Another accelerometer has its sensitive axis oriented parallel to the attachment surface and perpendicular to the midsagittal plane, with its seismic mass center at any distance up to 0.2 inches to the right of the intersection of the sensitive axes specified above. A third accelerometer has its sensitive axis oriented perpendicular to the attachment surface in the midsagittal plane, with its seismic mass center at any distance up to 1.3 inches dorsal to the intersection of the sensitive axes specified above. Accelerometers are oriented with the dummy in the position specified in § 572.11(i).

(d) A force-sensing device is mounted axially in each femur shaft so that the transverse centerline of the sensing element is 4.25 inches from the knee's center of rotation.

(e) The outputs of acceleration and force-sensing devices installed in the dummy and in the test apparatus specified by this part are recorded in individual data channels that conform to

the requirements of SAE Recommended Practice J211a, December 1971, with channel classes as follows:

(1) Head acceleration—Class 1000.
(2) Pendulum acceleration—Class 60.
(3) Thorax acceleration—Class 180.
(4) Thorax compression—Class 180.
(5) Femur force—Class 600.

(f) The mountings for sensing devices have no resonance frequency within a range of 3 times the frequency range of the applicable channel class.

(g) Limb joints are set at 1g, barely restraining the weight of the limb when it is extended horizontally. The force required to move a limb segment does not exceed 2g throughout the range of limb motion.

(h) Performance tests are conducted at any temperature from 66 °F to 78 °F and at any relative humidity from 10 percent to 70 percent after exposure of the dummy to these conditions for a period of not less than 4 hours.

(i) For the performance tests specified in §§572.8, 572.9, and 572.10, the dummy is positioned in accordance with Figure 11 as follows:

(1) The dummy is placed on a flat, rigid, smooth, clean, dry, horizontal, steel test surface whose length and width dimensions are not less than 16 inches, so that the dummy's midsagittal plane is vertical and centered on the test surface and the rearmost points on its lower legs at the level of the test surface are at any distance not less than 5 inches and not more than 6 inches forward of the forward edge of the test surface.

(2) The pelvis is adjusted so that the upper surface of the lumbar-pelvic adapter is horizontal.

(3) The shoulder yokes are adjusted so that they are at the midpoint of their anterior-posterior travel with their upper surfaces horizontal.

(4) The dummy is adjusted so that the rear surfaces of the shoulders and buttocks are tangent to a transverse vertical plane.

(5) The upper legs are positioned symmetrically about the midsagittal plane so that the distance between the knee pivot bolt heads is 11.6 inches.

(6) The lower legs are positioned in planes parallel to the midsagittal plane so that the lines between the midpoint of the knee pivots and the ankle pivots are vertical.

(j) The dummy's dimensions, as specified in drawing number SA 150 M002, are determined as follows:

(1) With the dummy seated as specified in paragraph (i) of this section, the head is adjusted and secured so that its occiput is 1.7 inches forward of the transverse vertical plane with the vertical mating surface of the skull with its cover parallel to the transverse vertical plane.

(2) The thorax is adjusted and secured so that the rear surface of the chest accelerometer mounting cavity is inclined 3° forward of vertical.

(3) Chest and waist circumference and chest depth measurements are taken with the dummy positioned in accordance with paragraphs (j) (1) and (2) of this section.

(4) The chest skin and abdominal sac are removed and all following measurements are made without them.

(5) Seated height is measured from the seating surface to the uppermost point on the head-skin surface.

(6) Shoulder pivot height is measured from the seating surface to the center of the arm elevation pivot.

(7) H-point locations are measured from the seating surface to the center of the holes in the pelvis flesh covering in line with the hip motion ball.

(8) Knee pivot distance from the backline is measured to the center of the knee pivot bolt head.

(9) Knee pivot distance from floor is measured from the center of the knee pivot bolt head to the bottom of the heel when the foot is horizontal and pointing forward.

(10) Shoulder width measurement is taken at arm elevation pivot center height with the centerlines between the elbow pivots and the shoulder pivots vertical.

(11) Hip width measurement is taken at widest point of pelvic section.

(k) Performance tests of the same component, segment, assembly, or fully assembled dummy are separated in time by a period of not less than 30 minutes unless otherwise noted.

(l) Surfaces of dummy components are not painted except as specified in this part or in drawings subtended by this part.

FIGURE 1

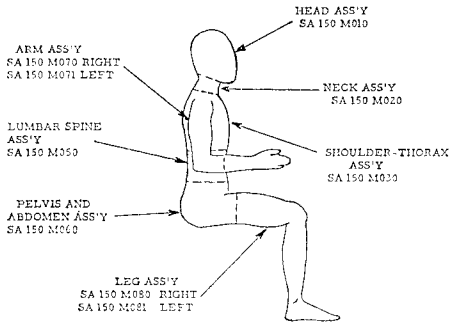

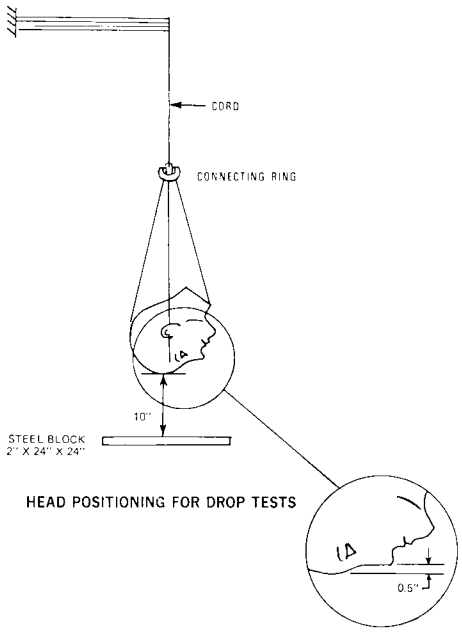

Figure 2

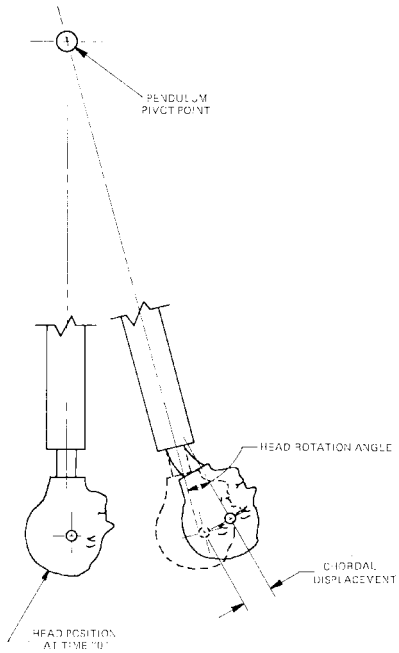

FIGURE NO. 3
NECK COMPONENT TEST

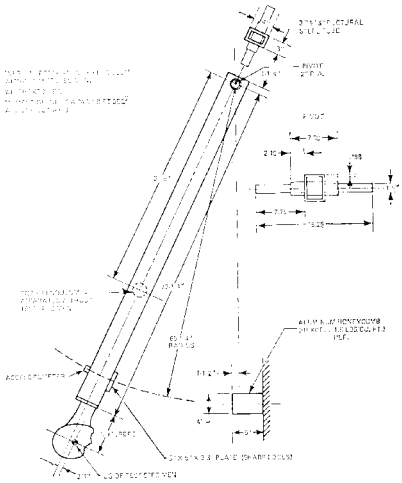

FIGURE NO. 4
NECK COMPONENT TEST

FIGURE NO. 5
LUMBAR FLEXION TEST

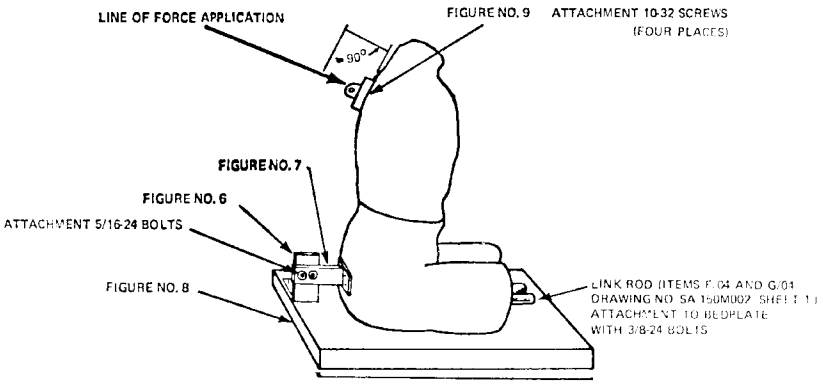

FIGURE NO. 6

SUPPORT BRACKET
LUMBAR TEST FIXTURE

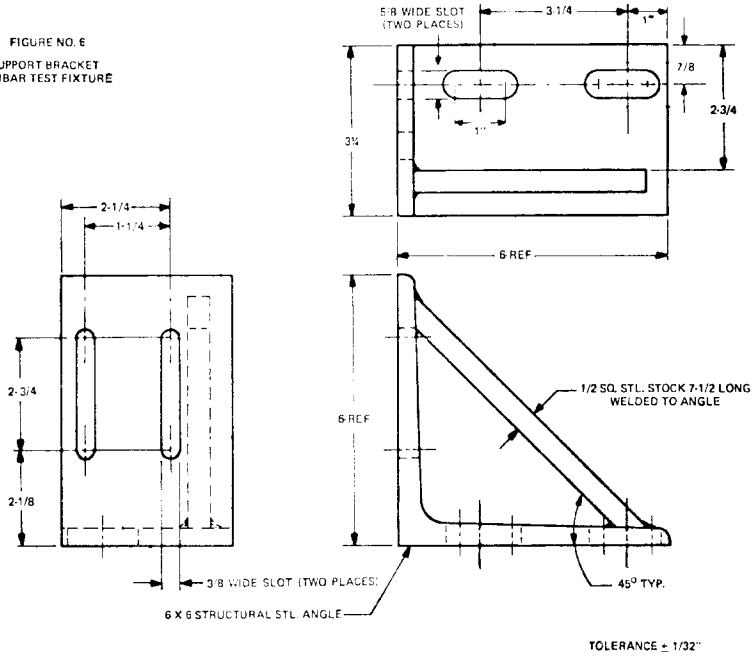

FIGURE NO. 7

MOUNTING BRACKET-LUMBAR TEST FIXTURE

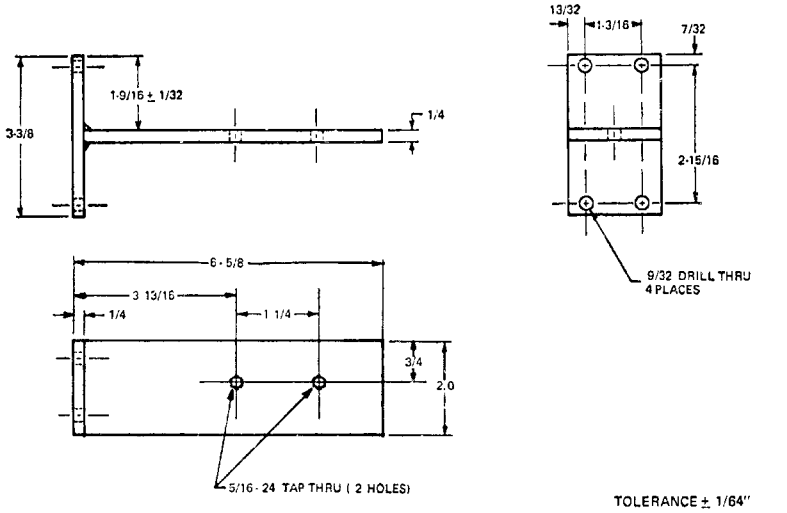

TOLERANCE ± 1/64"
MATERIAL: STEEL
WELDED CONSTRUCTION

FIGURE NO. 8

BEDPLATE - LUMBAR TEST FIXTURE

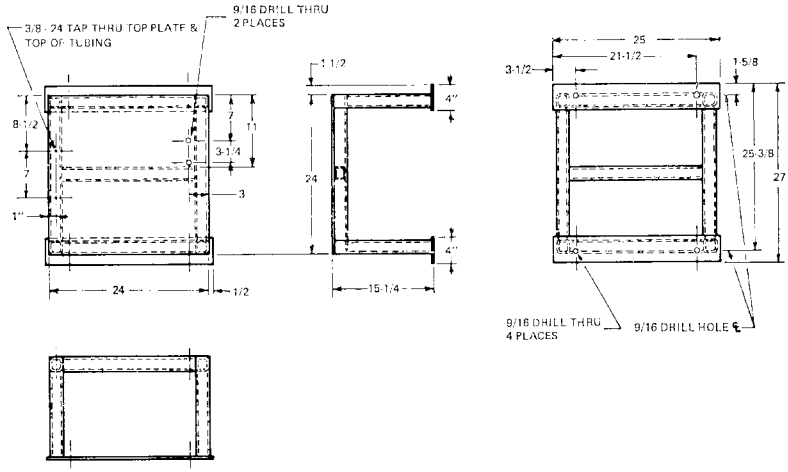

MATL: STEEL - 1/4 THICK PLATE & 2 X 2-1/4 WALL SQ. TUBING
WELDED CONSTRUCTION

TOLERANCE: ± 1/32"

FIGURE 9
Loading Plate- Lumbar Test Fixture

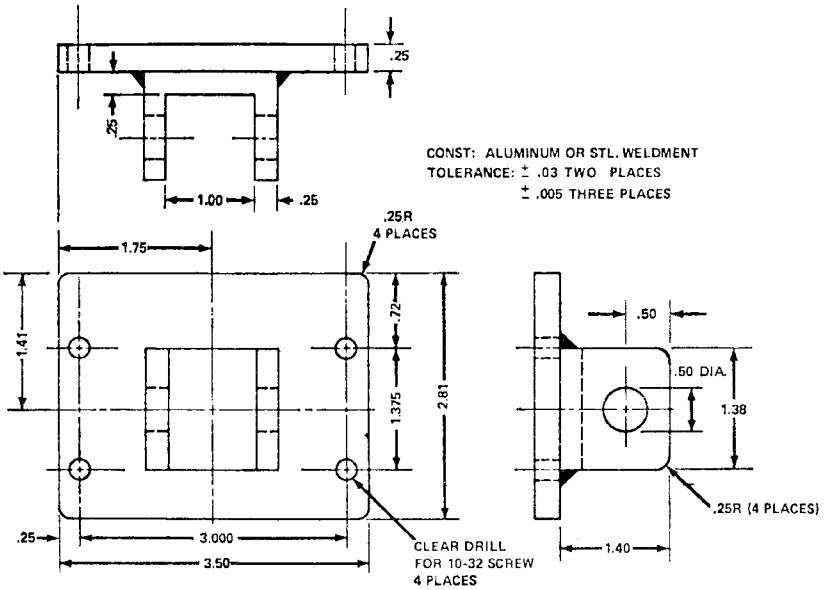

FIGURE NO. 10

ABDOMEN COMPONENT TEST

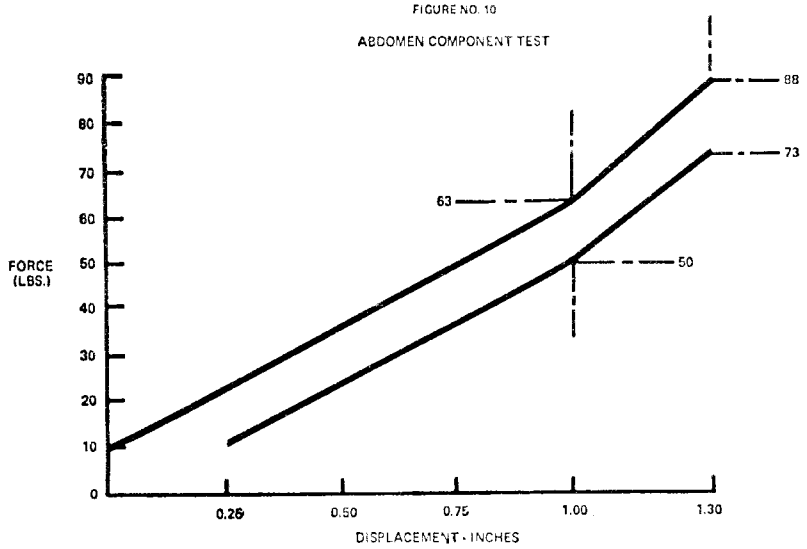

FIGURE No. 11

UPRIGHT SEATED POSITION FOR LINEAR MEASUREMENTS

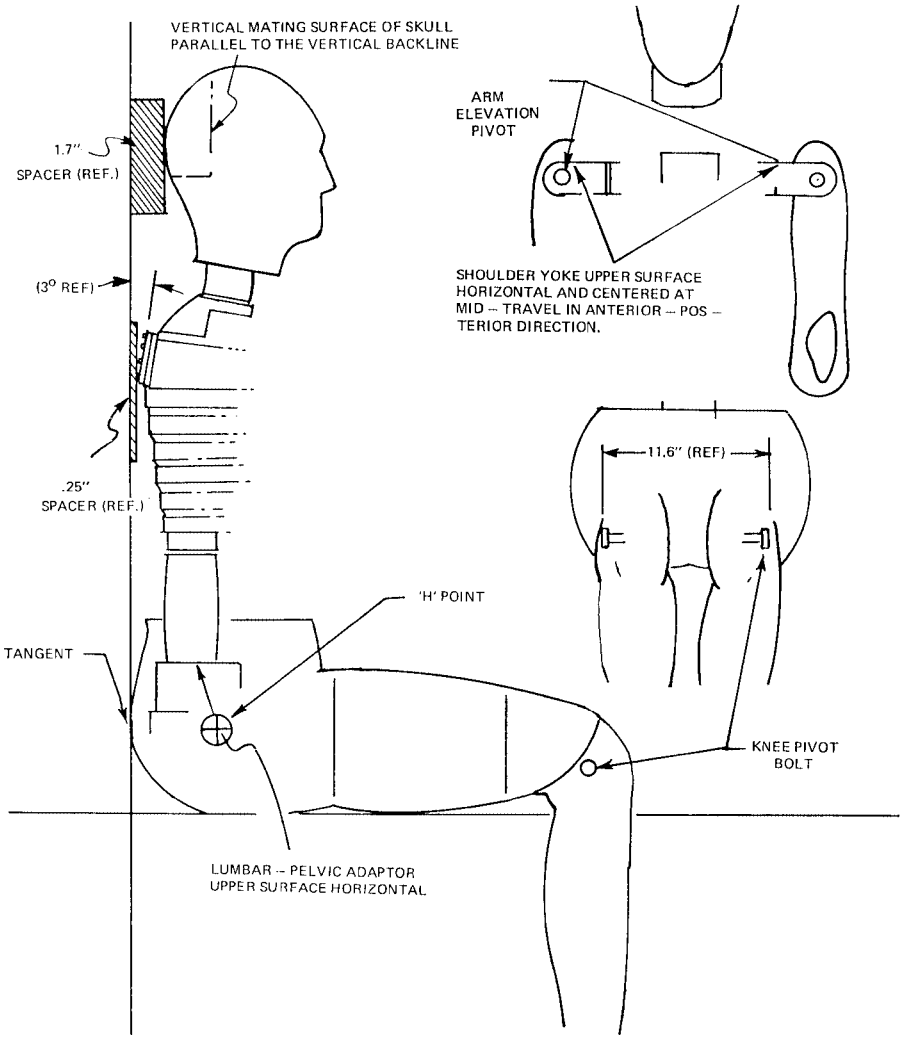

[38 FR 20451, Aug. 1, 1973, as amended at 42 FR 7153, Feb. 7, 1977]

Subpart C—3-Year-Old Child

SOURCE: 44 FR 76530, Dec. 27, 1979, unless otherwise noted.

§ 572.15 General description.

(a) The dummy consists of the component assemblies specified in drawing SA 103C 001, which are described in their entirety by means of approximately 122 drawings and specifications

and an Operation and Maintenance Manual, dated May 28, 1976. The drawings and specifications are grouped by component assemblies under the following thirteen headings:

SA 103C 010 Head Assembly
SA 103C 020 Neck Assembly
SA 103C 030 Torso Assembly
SA 103C 041 Upper Arm Assembly Left
SA 103C 042 Upper Arm Assembly Right
SA 103C 051 Forearm Hand Assembly Left
SA 103C 052 Forearm Hand Assembly Right
SA 103C 061Upper Leg Assembly Left
SA 103C 062 Upper Leg Assembly Right
SA 103C 071 Lower Leg Assembly Left
SA 103C 072 Lower Leg Assembly Right
SA 103C 081 Foot Assembly left
SA 103C 082 Foot Assembly Right.

(b) The drawings, specifications, and operation and maintenance manual referred to in this regulation that are not set forth in full are hereby incorporated in this part by reference. These materials are thereby made part of this regulation. The Director of the Federal Register has approved the materials incorporated by reference. For materials subject to change, only the specific version approved by the Director of the Federal Register and specified in the regulation are incorporated. A notice of any change will be published in the FEDERAL REGISTER. As a convenience to the reader, the materials incorporated by reference are listed in the Finding Aid Table found at the end of this volume of the Code of Federal Regulations.

(c) The materials incorporated by reference are available for examination in Docket 78–09, Room 5109, Docket Section, National Highway Traffic Safety Administration, 400 Seventh Street SW., Washington, DC 20590. Copies may be obtained from Rowley-Scher Reprographics, Inc., 1216 K Street NW., Washington, DC 20005 ((202) 628–6667). The materials are also on file in the reference library of the Office of the Federal Register, National Archives and Records Administration, Washington, DC.

(d) Adjacent segments are joined in a manner such that throughout the range of motion and also under simulated crash-impact conditions there is no contact between metallic elements except for contacts that exist under static conditions.

(e) The structural properties of the dummy are such that the dummy conforms to this part in every respect both before and after being used in vehicle tests specified in Standard No. 213 of this chapter (§ 571.213).

(f) The patterns of all cast and molded parts for reproduction of the molds needed in manufacturing of the dummies can be obtained on a loan basis by manufacturers of the testes dummies, or others if need is shown, from: Office of Vehicle Safety Standards, National Highway Traffic Safety Administration, 400 Seventh Street SW., Washington, DC 20590.

[50 FR 25423, June 19, 1985]

§ 572.16 Head.

(a) The head consists of the assembly designated as SA 103C 010 on drawing No. SA 103C 001, and conforms to either—

(1) Each item specified on drawing SA 103C 002(B), sheet 8; or

(2) Each item specified on drawing SA 103C 002, sheet 8.

(b) When the head is impacted by a test probe specified in § 572.21(a)(1) at 7 fps, then the peak resultant acceleration measured at the location of the accelerometer mounted in the headform according to § 572.21(b) is not less than 95g and not more than 118g.

(1) The recorded acceleration-time curve for this test is unimodal at or above the 50g level, and lies at or above that level for intervals:

(i) In the case of the head assembly specified in paragraph (a)(1) of this section, not less than 1.3 milliseconds and not more than 2.0 milliseconds;

(ii) In the case of the head assembly specified in paragraph (a)(2) of this section, not less than 2.0 milliseconds and not more than 3.0 milliseconds.

(2) The lateral acceleration vector does not exceed 7g.

(c) *Test procedure.* (1) Seat the dummy on a seating surface having a back support as specified in § 572.21(h) and orient the dummy in accordance with § 572.21(h) and adjust the joints of the limbs at any setting between 1g and 2g, which just supports the limbs' weight when the limbs are extended horizontally forward.

(2) Adjust the test probe so that its longitudinal centerline is at the forehead at the point of orthogonal intersection of the head midsagittal plane and the transverse plane which is perpendicular to the ''Z'' axis of the head (longitudinal centerline of the skull anchor) and is located 0.6 ± 0.1 inches above the centers of the head center of gravity reference pins and coincides within 2 degrees with the line made by the intersection of horizontal and midsagittal planes passing through this point.

(3) Adjust the dummy so that the surface area on the forehead immediately adjacent to the projected longitudinal centerline of the test probe is vertical.

(4) Impact the head with the test probe so that at the moment of impact the probe's longitudinal centerline falls within 2 degrees of a horizontal line in the dummy's midsagittal plane.

(5) Guide the probe during impact so that it moves with no significant lateral, vertical, or rotational movement.

(6) Allow a time period of at least 20 minutes between successive tests of the head.

[44 FR 76530, Dec. 27, 1979; 45 FR 43353, June 26, 1980, as amended at 45 FR 82267, Dec. 15, 1980; 55 FR 30468, July 26, 1990]

§ 572.17 Neck.

(a)(1) The neck for use with the head assembly described in § 572.16(a)(1) consists of the assembly designated as SA 103C 020 on drawing No. SA 103C 001, conforms to each item specified on drawing No. SA 103C 002(B), sheet 9.

(2) The neck for use with the head assembly described in § 572.16(a)(2) consists of the assembly designated as SA 103C 020 on drawing No. SA 103C 001, and conforms to each item specified on drawing No. SA 103C 002, sheet 9.

(b) When the head-neck assembly is tested in accordance with paragraph (c) of this section, the head shall rotate in reference to the pendulum's longitudinal centerline a total of 84 degrees ± 8 degrees about its center of gravity, rotating to the extent specified in the following table at each indicated point in time, measured from impact, with the chordal displacement measured at its center of gravity. The chordal displacement at time T is defined as the straight line distance between (1) the position relative to the pendulum arm of the head center of gravity at time zero, and (2) the position relative to the pendulum arm of the head center of gravity at time T as illustrated by figure 3. The peak resultant acceleration recorded at the location of the accelerometers mounted in the headform in accordance with § 572.21(b) shall not exceed 30g. The pendulum shall not reverse direction until the head's center of gravity returns to the original zero time position relative to the pendulum arm.

Rotation (degrees)	Time (ms) ±(2+.08T)	Chordal displacement (inches ±0.8)
0	0	0
30	21	2.2
60	36	4.3
Maximum	62	5.8
60	91	4.3
30	108	2.2
0	123	0

(c) *Test procedure.* (1) Mount the head and neck on a rigid pendulum as specified in Figure 4, so that the head's midsagittal plane is vertical and coincides with the plane of motion of the pendulum's longitudinal centerline. Mount the neck directly to the pendulum as shown in Figure 15.

(2) Release the pendulum and allow it to fall freely from a height such that the velocity at impact is 17.00 ± 1.0 feet per second (fps), measured at the center of the accelerometer specified in figure 4.

(3) Decelerate the pendulum to a stop with an acceleration-time pulse described as follows:

(i) Establish 5g and 20g levels on the a–t curve.

(ii) Establish t_1 at the point where the a–t curve first crosses the 5g level, t_2 at the point where the rising a–t curve first crosses the 20g level, t_3 at the point where the decaying a–t curve last crosses the 20g level, and t_4 at the point where the decaying a–t curve first crosses the 5g level.

(iii) t_2–t_1, shall be not more than 4 milliseconds.

(iv) t_3–t_2, shall be not less than 18 and not more than 21 milliseconds.

(v) t_4–t_3, shall be not more than 5 milliseconds.

(vi) The average deceleration between t_2 and t_3 shall be not less than 20g and not more then 34g.

(4) Allow the neck to flex without contact of the head or neck with any object other than the pendulum arm.

(5) Allow a time period of at least 1 hour between successive tests of the head and neck.

[44 FR 76530, Dec. 27, 1979; 45 FR 43353, June 26, 1980, as amended at 55 FR 30468, July 26, 1990]

§ 572.18 Thorax.

(a) The thorax consists of the part of the torso shown in assembly drawing SA 103C 001 by number SA 103C 030 and conforms to each of the applicable drawings listed under this number on drawing SA 103C 002, sheets 10 and 11.

(b) When impacted by a test probe conforming to § 572.21(a) at 13 fps in accordance with paragraph (c) of this section, the peak resultant accelerations at the location of the accelerometers mounted in the chest cavity in accordance with § 572.21(c) shall be not less than 50g and not more than 70g. The acceleration-time curve for the test shall be unimodal at or above the 30g level and shall lie at or above the 30g level for an interval not less than 2.5 milliseconds and not more than 4.0 milliseconds. The lateral acceleration shall not exceed 5g.

(c) *Test procedure.* (1) With the dummy seated without back support on a surface as specified in § 572.21(h) and oriented as specified in § 572.21(h), adjust the dummy arms and legs until they are extended horizontally forward parallel to the midsagittal plane. The joints of the limbs are adjusted at any setting between 1g and 2g, which just supports the limbs' weight when the limbs are extended horizontally forward.

(2) Establish the impact point at the chest midsagittal plane so that it is 1.5 inches below the longitudinal centerline of the bolt that attaches the top of the ribcage sternum to the thoracic spine box.

(3) Adjust the dummy so that the tangent plane at the surface on the thorax immediately adjacent to the designated impact point is vertical and parallel to the face of the test probe.

(4) Place the longitudinal centerline of the test probe to coincide with the designated impact point and align the test probe so that at impact its longitudinal centerline coincides within 2 degrees with the line formed by intersection of the horizontal and midsagittal planes passing through the designated impact point.

(5) Impact the thorax with the test probe so that at the moment of impact the probe's longitudinal centerline falls within 2 degrees of a horizontal line in the dummy midsagittal plane.

(6) Guide the probe during impact so that it moves with no significant lateral, vertical or rotational movement.

(7) Allow a time period of at least 20 minutes between successive tests of the chest.

§ 572.19 Lumbar spine, abdomen and pelvis.

(a) The lumbar spine, abdomen, and pelvis consist of the part of the torso assembly shown by number SA 103C 030 on drawing SA 103C 001 and conform to each of the applicable drawings listed under this number on drawing SA 103C 002, sheets 10 and 11.

(b) When subjected to continuously applied force in accordance with paragraph (c) of this section, the lumbar spine assembly shall flex by an amount that permits the rigid thoracic spine to rotate from its initial position in accordance with Figure 18 of this subpart by 40 degrees at a force level of not less than 34 pounds and not more than 47 pounds, and straighten upon removal of the force to within 5 degrees of its initial position.

(c) *Test procedure.* (1) The dummy with lower legs removed is positioned in an upright seated position on a seat as indicated in Figure 18, ensuring that all dummy component surfaces are clean, dry and untreated unless otherwise specified.

(2) Attach the pelvis to the seating surface by a bolt C/328, modified as shown in Figure 18, and the upper legs at the knee axial rotation joints by the attachments shown in Figure 18. Tighten the mountings so that the pelvis-lumbar joining surface is horizontal and adjust the femur ball-flange screws at each hip socket joint to 50 inch pounds torque. Remove the head and

the neck and install a cylindrical aluminum adapter 2.0 inches in diameter and 2.80 inches long in place of the neck.

(3) Flex the thorax forward 50 degrees and then rearward as necessary to return to its initial position in accordance with Figure 18 unsupported by external means.

(4) Apply a forward pull force in the midsagittal plane at the top of the neck adapter, so that at 40 degrees of the lumbar spine flexion the applied force is perpendicular to the thoracic spine box. Apply the force at any torso deflection rate between 0.5 and 1.5 degrees per second up to 40 degrees of flexion but no further; continue to apply for 10 seconds the force necessary to maintain 40 degrees of flexion, and record the highest applied force at that time. Release all force as rapidly as possible and measure the return angle 3 minutes after the release.

§ 572.20 Limbs.

The limbs consist of the assemblies shown on drawing SA 103C 001 as Nos. SA 103C 041, SA 103C 042, SA 103C 051, SA 103C 052, SA 103C 061, SA 103C 062, SA 103C 071, SA 103C 072, SA 103C 081, SA 103C 082, and conform to each of the applicable drawings listed under their respective numbers of the drawing SA 103C 002, sheets 12 through 21.

§ 572.21 Test conditions and instrumentation.

(a)(1) The test probe used for head and thoracic impact tests is a cylinder 3 inches in diameter, 13.8 inches long, and weighing 10 lbs., 6 ozs. Its impacting end has a flat right face that is rigid and that has an edge radius of 0.5 inches.

(2) The head and thorax assembly may be instrumented with a Type A or Type C accelerometer.

(i) Type A accelerometer is defined in drawing SA–572 S1.

(ii) Type C accelerometer is defined in drawing SA–572 S2.

(b) *Head accelerometers.* Install one of the triaxial accelerometers specified in § 572.21(a)(2) on a mounting block located on the horizontal transverse bulkhead as shown in the drawings subreferenced under assembly SA 103C 010 so that the seismic mass centers of each sensing element are positioned as specified in this paragraph, relative to the head accelerometer reference point located at the intersection of a line connecting the longitudinal centerlines of the transfer pins in the side of the dummy head with the midsagittal plane of the dummy head.

(1) The sensing elements of the Type C triaxial accelerometer are aligned as follows:

(i) Align one sensitive axis parallel to the vertical bulkhead and coincident with the midsagittal plane, with the seismic mass center located 0.2 inches dorsal to, and 0.1 inches inferior to the head accelerometer reference point.

(ii) Align the second sensitive axis with the horizontal plane, perpendicular to the midsagittal plane, with the seismic mass center located 0.1 inches inferior, 0.4 inches to the right of, and 0.9 inches dorsal to the head accelerometer reference point.

(iii) Align the third sensitive axis so that it is parallel to the midsagittal and horizontal planes, with the seismic mass center located 0.1 inches inferior to, 0.6 inches dorsal to, and 0.4 inches to the right of the head accelerometer reference point.

(iv) All seismic mass centers are positioned with ±0.05 inches of the specified locations.

(2) The sensing elements of the Type A triaxial accelerometer are aligned as follows:

(i) Align one sensitive axis parallel to the vertical bulkhead and coincident with midsagittal planes, with the seismic mass center located from 0.2 to 0.47 inches dorsal to, from 0.01 inches inferior to 0.21 inches superior, and from 0.0 to 0.17 inches left of the head accelerometer reference point.

(ii) Align the second sensitive axis with the horizontal plane, perpendicular to the midsagittal plane, with the seismic mass center located 0.1 to 0.13 inches inferior to, 0.17 to 0.4 inches to the right of, and 0.47 to 0.9 inches dorsal of the head accelerometer reference point.

(iii) Align the third sensitive axis so that it is parallel to the midsagittal and horizontal planes, with the seismic mass center located 0.1 to 0.13 inches inferior to, 0.6 to 0.81 inches dorsal to, and from 0.17 inches left to 0.4 inches

right of the head accelerometer reference point.

(c) *Thorax accelerometers.* Install one of the triaxial accelerometers specified in § 572.21(a)(2) on a mounting plate attached to the vertical transverse bulkhead shown in the drawing subreferenced under assembly No. SA 103C 030 in drawing SA 103C 001, so that the seismic mass centers of each sensing element are positioned as specified in this paragraph, relative to the thorax accelerometer reference point located in the midsagital plane 3 inches above the top surface of the lumbar spine, and 0.3 inches dorsal to the accelerometer mounting plate surface.

(1) The sensing elements of the Type C triaxial accelerometer are aligned as follows:

(i) Align one sensitive axis parallel to the vertical bulkhead and midsagittal planes, with the seismic mass center located 0.2 inches to the left of, 0.1 inches inferior to, and 0.2 inches ventral to the thorax accelerometer reference point.

(ii) Align the second sensitive axis so that it is in the horizontal transverse plane, and perpendicular to the midsagittal plane, with the seismic mass center located 0.2 inches to the right of, 0.1 inches inferior to, and 0.2 inches ventral to the thorax accelerometer reference point.

(iii) Align the third sensitive axis so that it is parallel to the midsagittal and horizontal planes, with the seismic mass center located 0.2 inches superior to, 0.5 inches to the right of, and 0.1 inches ventral to the thorax accelerometer reference points.

(iv) All seismic mass centers shall be positioned within ±0.05 inches of the specified locations.

(2) The sensing elements of the Type A triaxial accelerometer are aligned as follows:

(i) Align one sensitive axis parallel to the vertical bulkhead and midsagittal planes, with the seismic mass center located from 0.2 inches left to 0.28 inches right, from 0.5 to 0.15 inches inferior to, and from 0.15 to 0.25 inches ventral of the thorax accelerometer reference point.

(ii) Align the second sensitive axis so that it is in the horizontal transverse plane and perpendicular to the midsagital plane, with the seismic mass center located from 0.06 inches left to 0.2 inches right of, from 0.1 inches inferior to 0.24 inches superior, and 0.15 to 0.25 inches ventral to the thorax accelerometer reference point.

(iii) Align the third sensitive axis so that it is parallel to the midsagital and horizontal planes, with the seismic mass center located 0.15 to 0.25 inches superior to, 0.28 to 0.5 inches to the right of, and from 0.1 inches ventral to 0.19 inches dorsal to the thorax accelerometer reference point.

(d) The outputs of accelerometers installed in the dummy, and of test apparatus specified by this part, are recorded in individual data channels that conform to the requirements of SAE Recommended Practice J211a, December 1971, with channel classes as follows:

(1) Head acceleration—Class 1000.

(2) Pendulum acceleration—Class 60.

(3) Thorax acceleration—Class 180.

(e) The mountings for accelerometers have no resonance frequency less than cut-off 3 times the cut-off frequency of the applicable channel class.

(f) Limb joints are set at the force between 1–2g, which just supports the limbs' weight when the limbs are extended horizontally forward. The force required to move a limb segment does not exceed 2g throughout the range of limb motion.

(g) Performance tests are conducted at any temperature from 66 °F to 78 °F and at any relative humidity from 10 percent to 70 percent after exposure of the dummy to these conditions for a period of not less than 4 hours.

(h) For the performance tests specified in §§ 572.16, 572.18, and 572.19, the dummy is positioned in accordance with Figures 16, 17, and 18 as follows:

(1) The dummy is placed on a flat, rigid, clean, dry, horizontal surface of teflon sheeting with a smoothness of 40 microinches and whose length and width dimensions are not less than 16 inches, so that the dummy's midsagittal plane is vertical and centered on the test surface. For head tests, the seat has a vertical back support whose top is 12.4±0.2 inches above the seating surface. The rear surfaces of the dummy's shoulders and buttocks are touching the back support as

shown in Figure 16. For thorax and lumbar spine tests, the seating surface is without the back support as shown in Figures 17 and 18, respectively.

(2) The shoulder yokes are adjusted so that they are at the midpoint of their anterior-posterior travel with their upper surfaces horizontal.

(3) The dummy is adjusted for head impact and lumbar flexion tests so that the rear surfaces of the shoulders and buttocks are tangent to a transverse vertical plane.

(4) The arms and legs are positioned so that their centerlines are in planes parallel to the midsagittal plane.

(i) The dummy's dimensions are specified in drawings No. SA 103C 002, sheets 22 through 26.

(j) Performance tests of the same component, segment, assembly or fully assembled dummy are separated in time by a period of not less than 20 minutes unless otherwise specified.

(k) Surfaces of the dummy components are not painted except as specified in this part or in drawings subtended by this part.

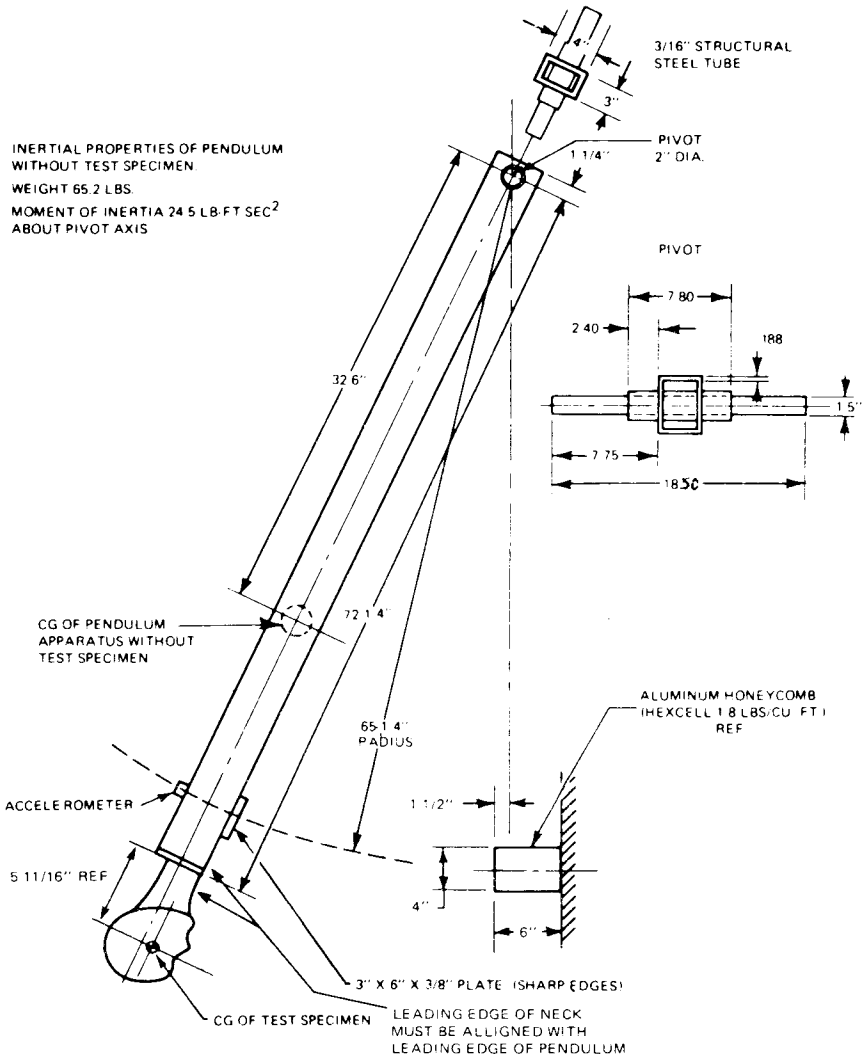

FIGURE NO. 15
NECK COMPONENT TEST

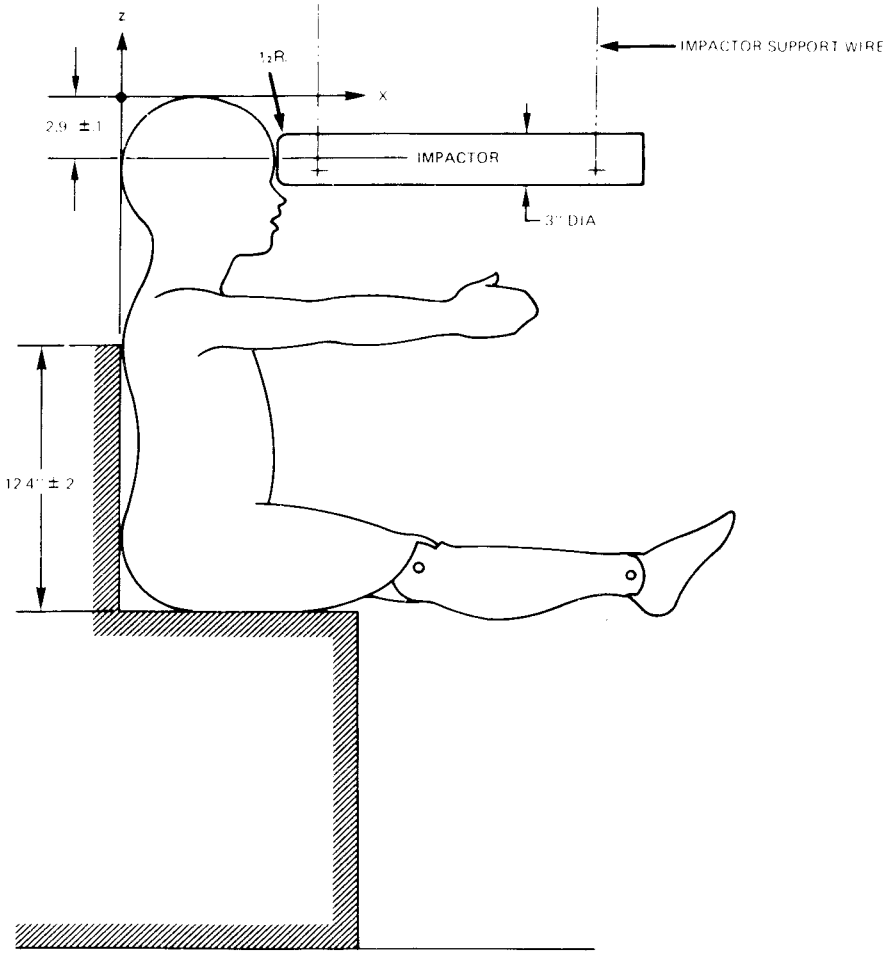

FIGURE NO. 16
HEAD IMPACT TEST

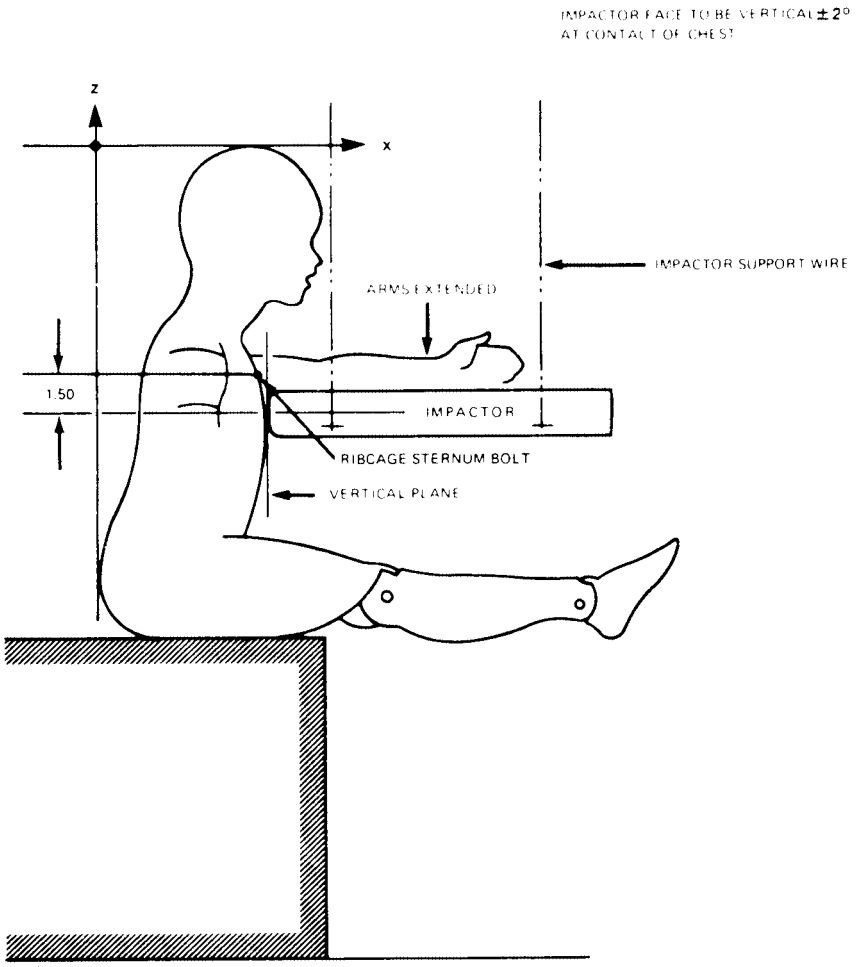

FIGURE NO. 17
CHEST IMPACT TEST

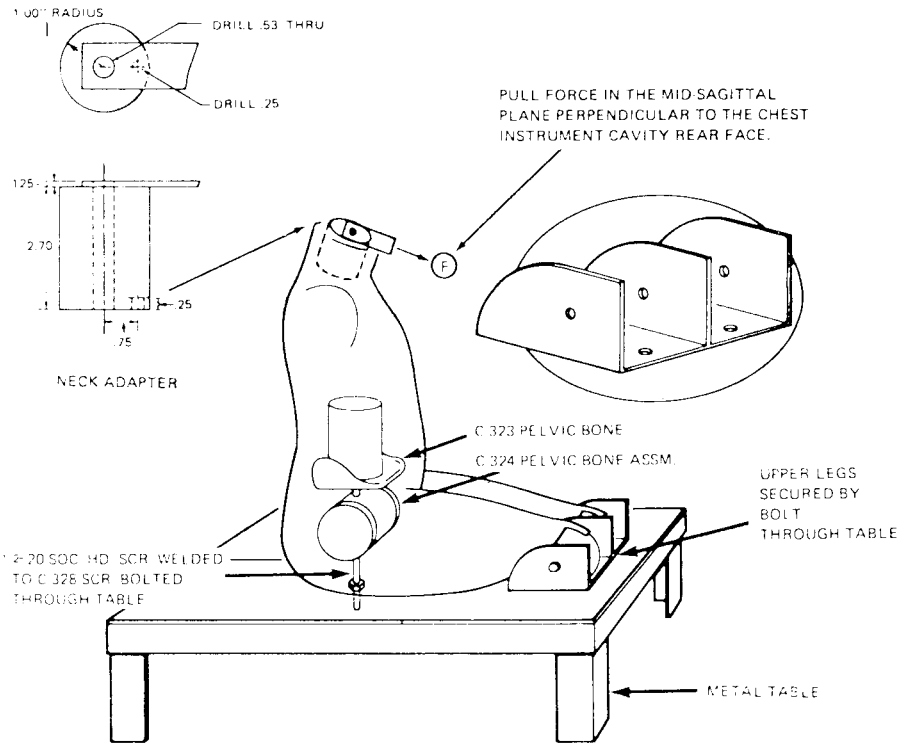

FIGURE NO. 18

LUMBAR SPINE FLEXION TEST

[44 FR 76530, Dec. 27, 1979, as amended at 45 FR 82267, Dec. 15, 1980; 55 FR 30468, July 26, 1990]

Subpart D—6-Month-Old Infant

§ 572.25 General description.

(a) The infant dummy is specified in its entirety by means of 5 drawings (No. SA 1001) and a construction manual, dated July 2, 1974, which describe in detail the materials and the procedures involved in the manufacturing of this dummy.

(b) The drawings, specifications, and construction manual referred to in this regulation that are not set forth in full are hereby incorporated in this part by reference. These materials are thereby

made part of this regulation. The Director of the Federal Register has approved the materials incorporated by reference. For materials subject to change, only the specific version approved by the Director of the Federal Register and specified in the regulation are incorporated. A notice of any change will be published in the FEDERAL REGISTER. As a convenience to the reader, the materials incorporated by reference are listed in the Finding Aid Table found at the end of this volume of the Code of Federal Regulations.

(c) The materials incorporated by reference are available for examination in Docket 78–09, Room 5109, Docket Section, National Highway Traffic Safety Administration, 400 Seventh Street SW., Washington, DC, 20590. Copies may be obtained from Rowley-Scher Reprographics, Inc., 1216 K Street NW., Washington, DC 20005 ((202) 628–6667). The materials are also on file in the reference library of the Office of the Federal Register, National Archives and Records Administration, Washington, DC.

(d) The structural properties of the dummy are such that the dummy conforms to this part in every respect both before and after being used in vehicle tests specified in Standard No. 213 of this chapter (§ 571.213).

[50 FR 25424, June 19, 1985]

Subpart E—Hybrid III Test Dummy

SOURCE: 51 FR 26701, July 25, 1986, unless otherwise noted.

§ 572.30 Incorporated materials.

(a) The drawings and specifications referred to in this regulation that are not set forth in full are hereby incorporated in this part by reference. The Director of the Federal Register has approved the materials incorporated by reference. For materials subject to change, only the specific version approved by the Director of the Federal Register and specified in the regulation are incorporated. A notice of any change will be published in the FEDERAL REGISTER. As a convenience to the reader, the materials incorporated by reference are listed in the Finding Aid Table found at the end of this volume of the Code of Federal Regulations.

(b) The materials incorporated by reference are available for examination in the general reference section of docket 74–14, Docket Section, National Highway Traffic Safety Administration, Room 5109, 400 Seventh Street, SW., Washington, DC 20590. Copies may be obtained from Reprographic Technologies, 9000 Virginia Manor Road, Beltsville, MD 20705, Telephone (301) 210–5600, Facsimile (301) 419–5069, Attn. Mr. Jay Wall. Drawings and specifications are also on file in the reference library of the Office of the Federal Register, 800 N. Capitol Street, NW., suite 700, Washington, DC.

[51 FR 26701, July 25, 1986, as amended at 61 FR 67955, Dec. 26, 1996]

§ 572.31 General description.

(a) The Hybrid III 50th percentile size dummy consists of components and assemblies specified in the Anthropomorphic Test Dummy drawing and specifications package which consists of the following six items:

(1) The Anthropomorphic Test Dummy Parts List, dated June 26, 1998, and containing 16 pages, and a Parts List Index, dated June 26, 1998, containing 8 pages.

(2) A listing of Hybrid III Dummy Transducers-reference document AGARD–AR–330, ''Anthropomorphic Dummies for Crash and Escape System Testing'', Chapter 6, Table 6–2, North Atlantic Treaty Organization, July, 1996.

(3) A General Motors Drawing Package identified by GM Drawing No. 78051–218, revision U, titled ''Hybrid III Anthropomorphic Test Dummy,'' dated August 30, 1998, the following component assemblies, and subordinate drawings:

Drawing No.	Revision
78051–61X head assembly-complete, (May 20, 1978)	(T)
78051–90 neck assembly-complete, dated May 20, 1978	(A)
78051–89 upper torso assembly-complete, dated May 20, 1978	(K)
78051–70 lower torso assembly-complete, dated June 30, 1998, except for drawing No. 78051–55, ''Instrumentation Assembly-Pelvic Accelerometer,'' dated August 2, 1979	(F)

Drawing No.	Revision
86–5001–001 leg assembly-complete (LH), dated March 26, 1996	(A)
86–5001–002 leg assembly-complete (RH), dated March 26, 1996	(A)
78051–123 arm assembly-complete (LH), dated May 20, 1996	(D)
78051–124 arm assembly-complete (RH), dated May 20, 1978	(D)
78051–59 pelvic assembly-complete, dated June 30, 1998	(G)
78051–60 pelvic structure-molded, dated June 30, 1998	(E)

(4) Disassembly, Inspection, Assembly and Limbs Adjustment Procedures for the Hybrid III dummy, dated June 1998.

(5) Sign Convention for signal outputs—reference document SAE J1733 Information Report, titled ''Sign Convention for Vehicle Crash Testing'', dated 1994–12.

(6) Exterior dimensions of the Hybrid III dummy, dated July 15, 1986.

(b) [Reserved]

(c) Adjacent segments are joined in a manner such that throughout the range of motion and also under crash-impact conditions, there is no contact between metallic elements except for contacts that exist under static conditions.

(d) The weights, inertial properties and centers of gravity location of component assemblies shall conform to those listed in drawing 78051–338, revision S, titled ''Segment Weights, Inertial Properties, Center of Gravity Location—Hybrid III,'' dated May 20, 1978 of drawing No. 78051–218.

(e) The structural properties of the dummy are such that the dummy conforms to this part in every respect both before and after being used in vehicle test specified in Standard No. 208 of this chapter (§ 571.208).

[51 FR 26701, July 25, 1986, as amended at 53 FR 8764, Mar. 17, 1988; 57 FR 47010, Oct. 14, 1992; 61 FR 67955, Dec. 26, 1996; 62 FR 27514, May 20, 1997; 63 FR 5747, Feb. 4, 1998; 63 FR 53851, Oct. 7, 1998]

§ 572.32 Head.

(a) The head consists of the assembly shown in drawing 78051–61X, revision C, and conforms to each of the drawings subtended therein.

(b) When the head (Drawing number 78051–61X, titled ''head assembly—complete,'' dated March 28, 1997 (Revision C) with six axis neck transducer structural replacement (Drawing number 78051–383X, Revision P, titled ''Neck Transducer Structural Replacement,'' dated November 1, 1995) is dropped from a height of 14.8 inches in accordance with paragraph (c) of this section, the peak resultant accelerations at the location of the accelerometers mounted in the head in accordance with § 572.36(c) shall not be less than 225g, and not more than 275g. The acceleration/time curve for the test shall be unimodal to the extent that oscillations occurring after the main acceleration pulse are less than ten percent (zero to peak) of the main pulse. The lateral acceleration vector shall not exceed 15g (zero to peak).

(c) *Test procedure.* (1) Soak the head assembly in a test environment at any temperature between 66 degrees F to 78 degrees F and at a relative humidity from 10% to 70% for a period of at least four hours prior to its application in a test.

(2) Clean the head's skin surface and the surface of the impact plate with 1,1,1 Trichlorethane or equivalent.

(3) Suspend the head, as shown in Figure 19, so that the lowest point on the forehead is 0.5 inches below the lowest point on the dummy's nose when the midsagittal plane is vertical.

FIGURE 19

TEST SET-UP SPECIFICATIONS

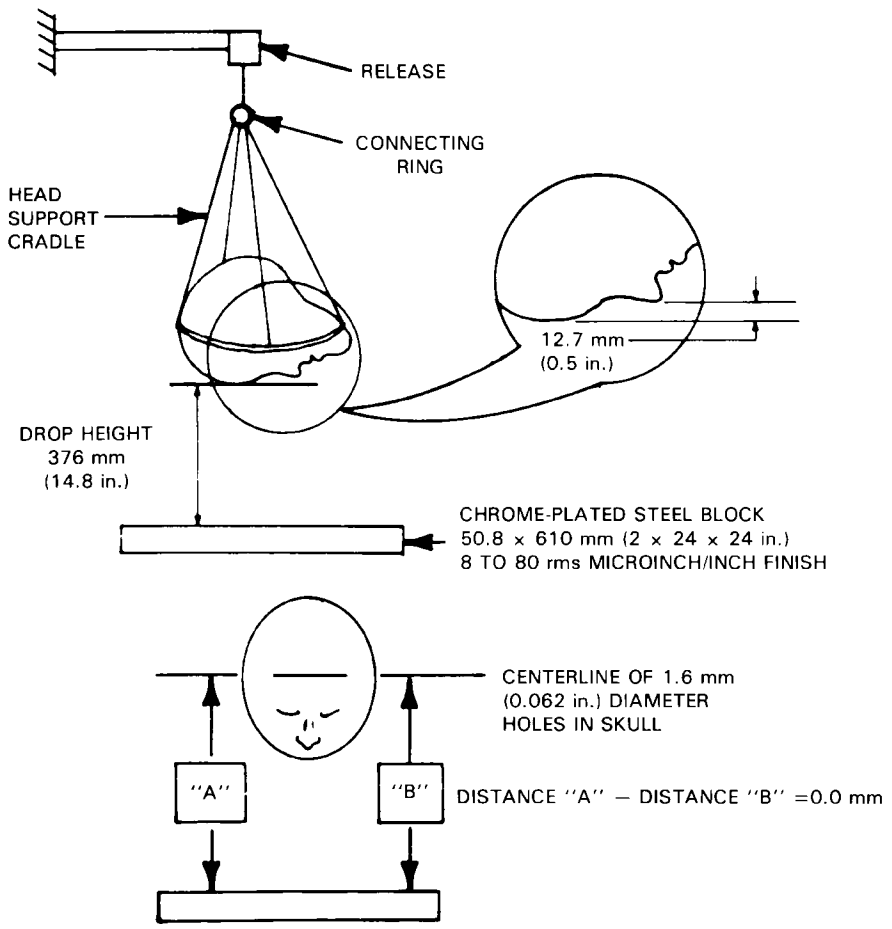

NOTE: TOLERANCE ON TEST SETUP DIMENSIONS ±1 mm (0.04 in.)

(4) Drop the head from the specified height by means that ensure instant release into a rigidly supported flat horizontal steel plate, which is 2 inches thick and 2 feet square. The plate shall have a clean, dry surface and any microfinish of not less than 8 microinches (rms) and not more than 80 microinches (rms).

(5) Allow at least 3 hours between successive tests on the same head.

[51 FR 26701, July 25, 1986, as amended at 62 FR 27514, May 20, 1997]

§ 572.33 Neck.

(a) The neck consists of the assembly shown in drawing 78051–90, revision A and conforms to each of the drawings subtended therein.

(b) When the head and neck assembly (consisting of the parts 78051–61X, revision C; –90, revision A; –84; –94; –98; –104, revision F; –303, revision E; –305; –306; –307, revision X) which has a six axis neck transducer (Drawing number C–1709, Revision D, titled ''Neck transducer,'' dated February 1, 1993.) installed in conformance with § 572.36(d), is tested in accordance with paragraph (c) of this section, it shall have the following characteristics:

(1) *Flexion.* (i) Plane D, referenced in Figure 20, shall rotate between 64 degrees and 78 degrees, which shall occur between 57 milliseconds (ms) and 64 ms from time zero. In first rebound, the rotation of Plane D shall cross 0 degrees between 113 ms and 128 ms.

(ii) The moment measured by the six axis neck transducer (drawing C–1709, revision D) about the occipital condyles, referenced in Figure 20, shall be calculated by the following formula: Moment (lbs-ft) = My − 0.058 × Fx, where My is the moment measured in lbs-ft by the ''Y'' axis moment sensor of the six axis neck transducer and Fx is the force measured in lbs by the ''X'' axis force sensor (Channel Class 600) of the six axis neck transducer. The moment shall have a maximum value between 65 lbs-ft and 80 lbs-ft occurring between 47ms and 58 ms, and the positive moment shall decay for the first time to 0 lb-ft between 97 ms and 107 ms.

(2) *Extension.* (i) Plane D, referenced in Figure 21, shall rotate between 81 degrees and 106 degrees, which shall occur between 72 ms and 82 ms from time zero. In first rebound, rotation of Plane D shall cross 0 degrees between 147 ms and 174 ms.

(ii) The moment measured by the six axis neck transducer (drawing C–1709, revision D) about the occipital condyles, referenced in Figure 21, shall be calculated by the following formula: Moment (lbs-ft) = My − 0.058 × Fx, where My is the moment measured in lbs-ft by the ''Y'' axis moment sensor of the six axis neck transducer and Fx is the force measured in lbs by the ''X'' axis force sensor (Channel Class 600) of the six axis neck transducer. The moment shall have a maximum value between—39 lbs-ft and –59 lbs-ft, occurring between 65 ms and 79 ms, and the negative moment shall decay for the first time to 0 lb-ft between 120 ms and 148 ms.

FIGURE 20

FLEXION - TEST SET-UP SPECIFICATIONS

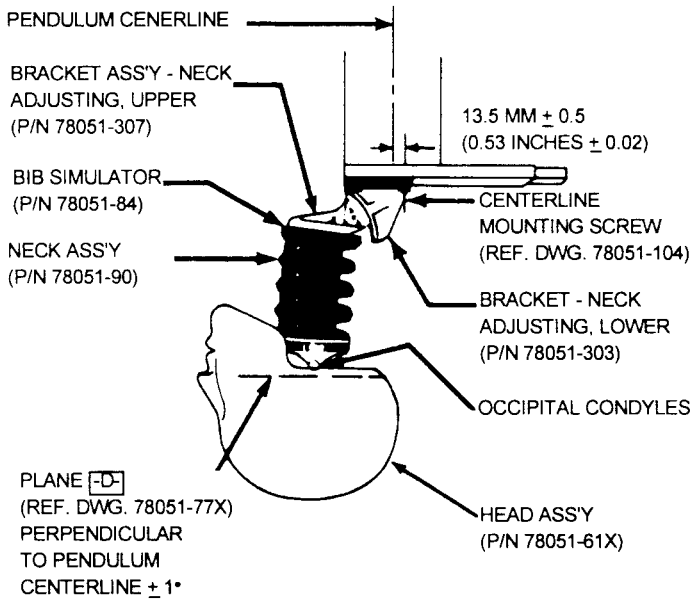

NOTE: PENDULUM SHOWN AT TIME ZERO POSITION

FIGURE 21

EXTENSION - TEST SET-UP SPECIFICATIONS

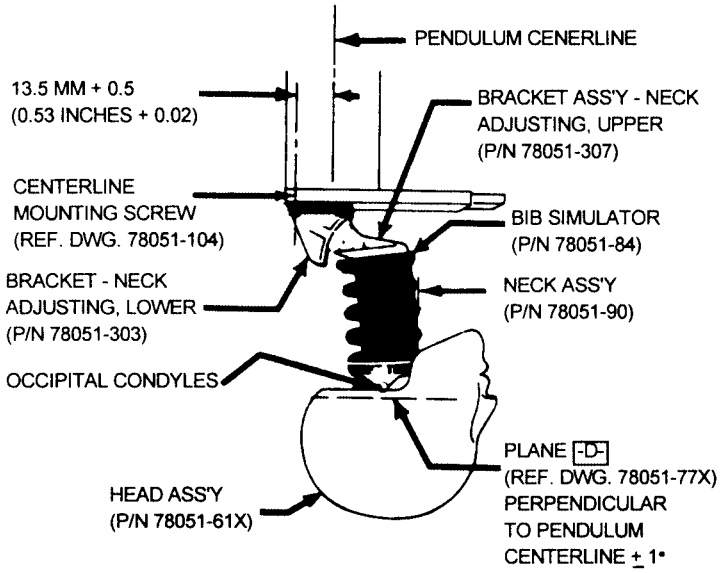

NOTE: PENDULUM SHOWN AT TIME ZERO POSITION

(c) *Test procedure.* (1) Soak the test material in a test environment at any temperature between 69 degrees F to 72 degrees F and at a relative humidity from 10% to 70% for a period of at least four hours prior to its application in a test.

(2) Torque the jamnut (78051–64) on the neck cable (78051–301, revision E) to 1.0 lbs-ft ±.2 lbs-ft.

(3) Mount the head-neck assembly, defined in paragraph (b) of this section, on a rigid pendulum as shown in Figure 22 so that the head's midsagittal plane is vertical and coincides with the plane of motion of the pendulum's longitudinal axis.

FIGURE 22

PENDULUM SPECIFICATIONS

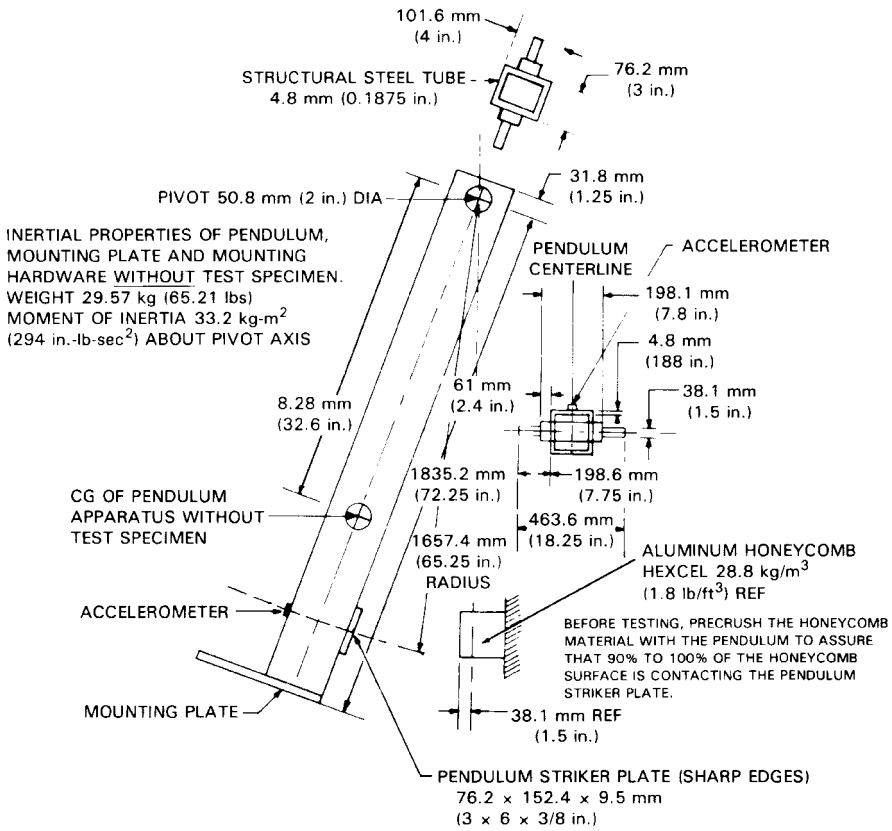

(4) Release the pendulum and allow it to fall freely from a height such that the tangential velocity at the pendulum accelerometer centerline at the instance of contact with the honeycomb is 23.0 ft/sec ± 0.4 ft/sec. for flexion testing and 19.9 ft/sec. ± 0.4 ft/sec. for extension testing. The pendulum deceleration vs. time pulse for flexion testing shall conform to the characteristics shown in Table A and the decaying deceleration-time curve shall first cross 5_g between 34 ms and 42 ms. The pendulum deceleration vs. time pulse for extension testing shall conform to the characteristics shown in Table B and the decaying deceleration-time curve shall cross 5g between 38 ms and 46 ms.

TABLE A—FLEXION PENDULUM DECELERATION VS. TIME PULSE

Time (ms)	Flexion deceleration level (g)
10	22.50–27.50
20	17.60–22.60
30	12.50–18.50
Any other time above 30 ms	29 maximum.

TABLE B—EXTENSION PENDULUM DECELERATION VS. TIME PULSE

Time (ms)	Extension deceleration level (g)
10	17.20–21.20
20	14.00–19.00
30	11.00–16.00
Any other time above 30 ms	22 maximum.

(5) Allow the neck to flex without impact of the head or neck with any object during the test.

[51 FR 26701, July 25, 1986, as amended at 53 FR 8765, Mar. 17, 1988; 62 FR 27514, May 20, 1997]

§ 572.34 Thorax.

(a) The thorax consists of the upper torso assembly in drawing 78051–89, revision K and shall conform to each of the drawings subtended therein.

(b) When impacted by a test probe conforming to § 572.36(a) at 22 fps +/− 0.40 fps in accordance with paragraph (c) of this section, the thorax of a complete dummy assembly (78051–218, revision U, without shoes, shall resist with a force of 1242.5 pounds +/− 82.5 pounds measured by the test probe and shall have a sternum displacement measured relative to spine of 2.68 inches +/− 0.18 inches. The internal hysteresis in each impact shall be more than 69% but less than 85%. The force measured is the product of pendulum mass and deceleration.

(c) *Test procedure.* (1) Soak the test dummy in an environment with a relative humidity from 10% to 70% until the temperature of the ribs of the test dummy have stabilized at a temperature between 69 degrees F and 72 degrees F.

(2) Seat the dummy without back and arm supports on a surface as shown in Figure 23, and set the angle of the pelvic bone at 13 degrees plus or minus 2 degrees, using the procedure described in S11.4.3.2 of Standard No. 208 (§ 571.208 of this chapter).

FIGURE 23

TEST SET-UP SPECIFICATIONS

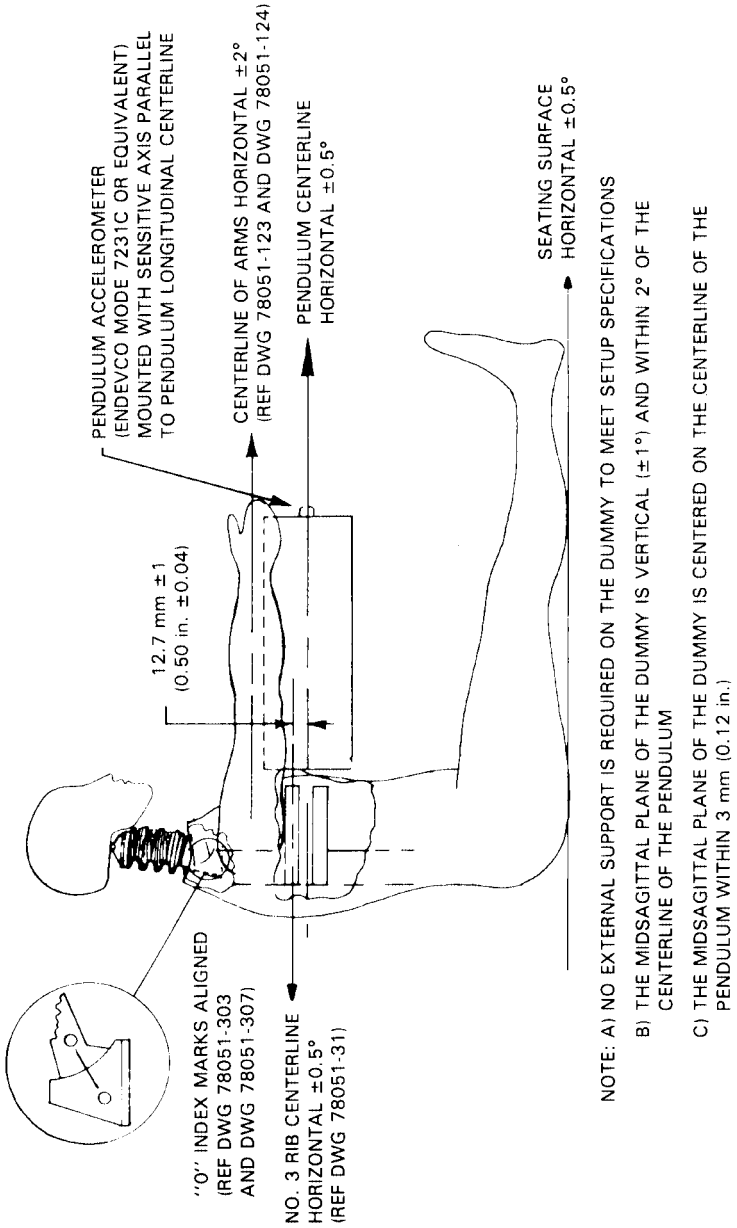

(3) Place the longitudinal centerline of the test probe so that it is .5 ± .04 in. below the horizontal centerline of the No. 3 Rib (reference drawing number 79051–64, revision A–M) as shown in Figure 23.

(4) Align the test probe specified in § 572.36(a) so that at impact its longitudinal centerline coincides within .5 degree of a horizontal line in the dummy's midsagittal plane.

(5) Impact the thorax with the test probe so that the longitudinal centerline of the test probe falls within 2 degrees of a horizontal line in the dummy midsagittal plane at the moment of impact.

(6) Guide the probe during impact so that it moves with no significant lateral, vertical, or rotational movement.

(7) Measure the horizontal deflection of the sternum relative to the thoracic spine along the line established by the longitudinal centerline of the probe at the moment of impact, using a potentiometer (ref. drawing 78051–317, revision A) mounted inside the sternum as shown in drawing 78051–89, revision I.

(8) Measure hysteresis by determining the ratio of the area between the loading and unloading portions of the force deflection curve to the area under the loading portion of the curve.

[51 FR 26701, July 25, 1986, as amended at 53 FR 8765, Mar. 17, 1988; 62 FR 27518, May 20, 1997; 63 FR 53851, Oct. 7, 1998]

§ 572.35 Limbs.

(a) The limbs consist of the following assemblies: leg assemblies 86–5001–001, revision A and –002, revision A, and arm assemblies 78051–123, revision D and –124, revision D, and shall conform to the drawings subtended therein.

(b) *Femur impact response.* (1) When each knee of the leg assemblies is impacted in accordance with paragraph (b)(2) of this section, at 6.9 ft/sec ±0.10 ft/sec by the pendulum defined in § 572.36(b), the peak knee impact force, which is a product of pendulum mass and acceleration, shall have a minimum value of not less than 1060 pounds and a maximum value of not more than 1300 pounds.

(2) *Test procedure.* (i) The test material consists of leg assemblies (86–5001–001, revision A) left and (–002, revision A) right with upper leg assemblies (78051–46) left and (78051–47) right removed. The load cell simulator (78051–319, revision A) is used to secure the knee cap assemblies (79051–16, revision B) as shown in Figure 24.

(ii) Soak the test material in a test environment at any temperature between 66 degrees F to 78 degrees F and at a relative humidity from 10% to 70% for a period of at least four hours prior to its application in a test.

(iii) Mount the test material with the leg assembly secured through the load cell simulator to a rigid surface as shown in Figure 24. No contact is permitted between the foot and any other exterior surfaces.

(iv) Place the longitudinal centerline of the test probe so that at contact with the knee it is collinear within 2 degrees with the longitudinal centerline of the femur load cell simulator.

(v) Guide the pendulum so that there is no significant lateral, vertical or rotational movement at time zero.

(vi) Impact the knee with the test probe so that the longitudinal centerline of the test probe at the instant of impact falls within .5 degrees of a horizontal line parallel to the femur load cell simulator at time zero.

(vii) Time zero is defined as the time of contact between the test probe and the knee.

(c) *Hip joint-femur flexion.* (1) When each femur is rotated in the flexion direction in accordance with paragraph (c)(2) of this section, the femur torque at 30 deg. rotation from its initial horizontal orientation will not be more than 70 ft-lbf, and at 150 ft-lbf of torque will not be less than 40 deg. or more than 50 deg.

(2) Test procedure. (i) The test material consists of the assembled dummy, part No. 78051–218 (revision S) except that (1) leg assemblies (86–5001–001 and 002) are separated from the dummy by removing the 3/8–16 Socket Head Cap Screw (SHCS) (78051–99) but retaining the structural assembly of the upper legs (78051–43 and –44), (2) the abdominal insert (78051–52) is removed and (3) the instrument cover plate (78051–13) in the pelvic bone is replaced by a rigid pelvic bone stabilizer insert (Figure 25a) and firmly secured.

(ii) Seat the dummy on a rigid seat fixture (Figure 25) and firmly secure it to the seat back by bolting the stabilizer insert and the rigid support device (Figure 25b) to the seat back of the test fixture (Figures 26 and 27) while

maintaining the pelvis (78051–58) ''B'' plane horizontal.

(iii) Insert a lever arm into the femur shaft opening of the upper leg structure assembly (78051–43/44) and firmly secure it using the 3/8–16 socket head cap screws.

(iv) Lift the lever arm parallel to the midsagittal plane at a rotation rate of 5 to 10 deg. per second while maintaining the 1/2 in. shoulder bolt longitudinal centerline horizontal throughout the range of motion until the 150 ft–lbf torque level is reached. Record the torque and angle of rotation of the femur.

(v) Operating environment and temperature are the same as specified in paragraph (b)(2)(ii) of this section.

FIGURE 24

TEST SET-UP SPECIFICATIONS

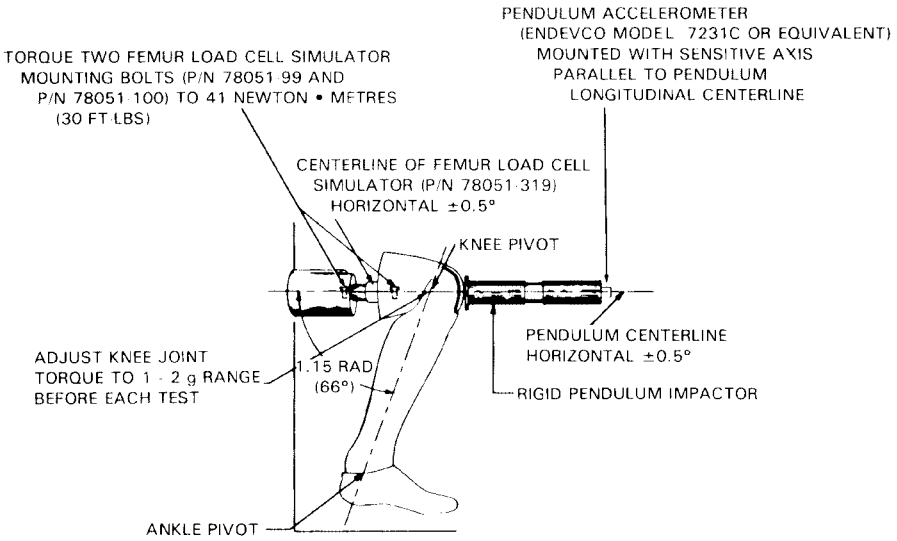

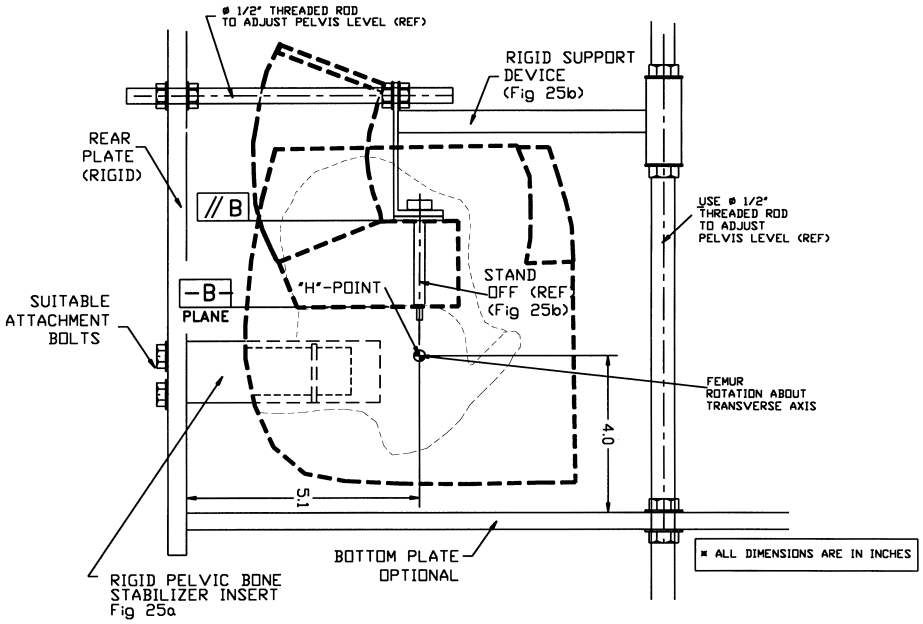

HIP-JOINT TEST FIXTURE ASSEMBLY (REF)
Fig 25

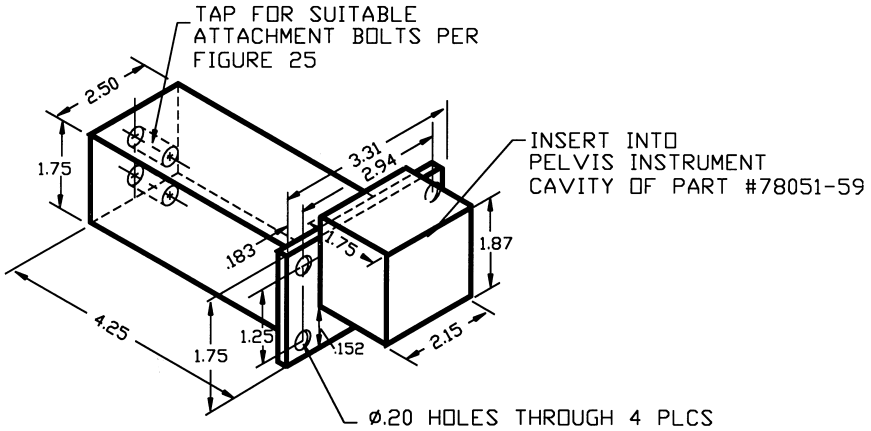

(REF NOTE): HOLE LOCATIONS MATCHING
INSTRUMENT CAVITY COVER #78051-13

* ALL DIMENSIONS ARE IN INCHES

MATERIAL: Alum. or Steel

PELVIC BONE STABILIZER INSERT (REF)

Fig 25a

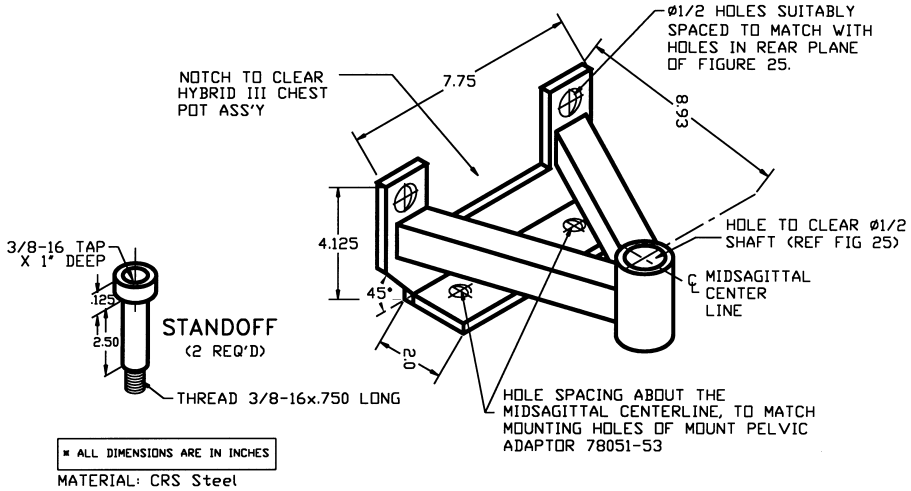

* ALL DIMENSIONS ARE IN INCHES

MATERIAL: CRS Steel

PELVIS UPPER SUPPORT DEVICE (REF)

Fig 25b

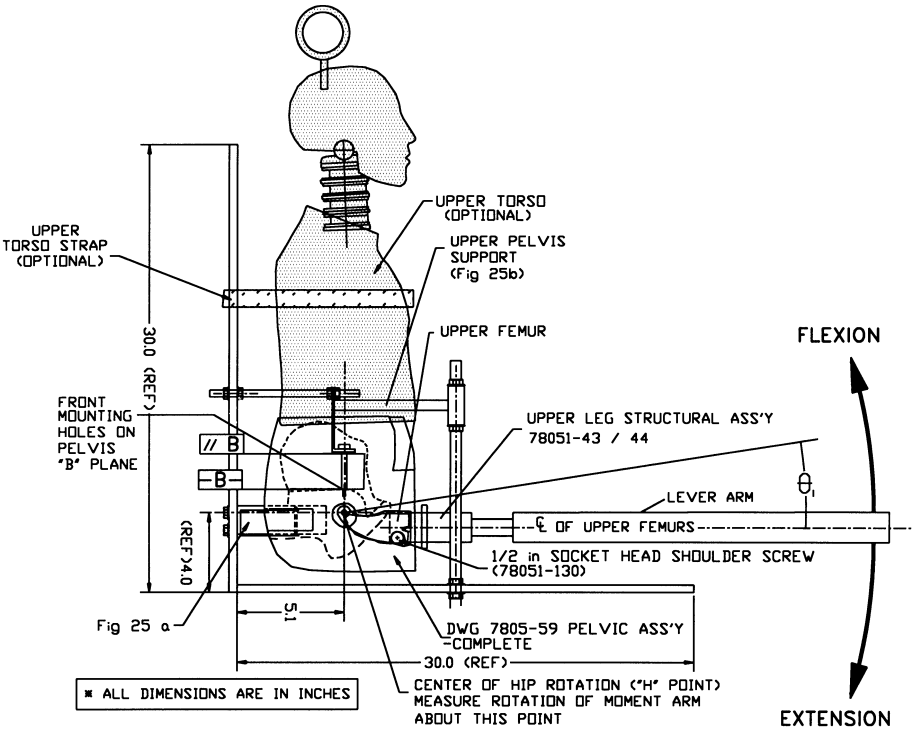

HIP JOINT TEST FIXTURE AND TORSO ASSEMBLY (REF)
SIDE VIEW

Fig 26

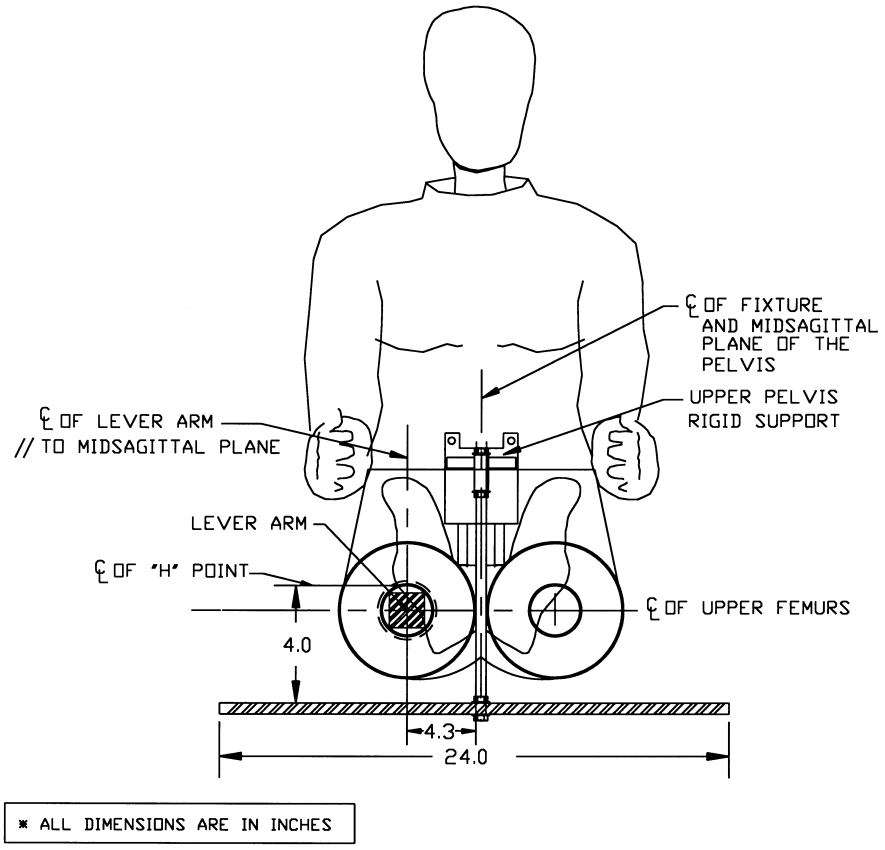

HIP JOINT TEST FIXTURE AND TORSO ASSEMBLY (REF)
FRONT VIEW

Fig 27

[51 FR 26701, July 25, 1986, as amended at 53 FR 8765, Mar. 17, 1988; 61 FR 67955, Dec. 26, 1997; 63 FR 5748, Feb. 4, 1998]

§ 572.36 Test conditions and instrumentation.

(a) The test probe used for thoracic impact tests is a 6 inch diameter cylinder that weighs 51.5 pounds including instrumentation. Its impacting end has a flat right angle face that is rigid and has an edge radius of 0.5 inches. The test probe has an accelerometer mounted on the end opposite from impact with its sensitive axis colinear to the longitudinal centerline of the cylinder.

(b) Test probe used for the knee impact tests is a 3 inch diameter cylinder that weights 11 pounds including instrumentation. Its impacting end has a flat right angle face that is rigid and has an edge radius of 0.02 inches. The test probe has an accelerometer mounted on the end opposite from impact with its sensitive axis colinear to the longitudinal centerline of the cylinder.

(c) Head accelerometers shall have dimensions and response characteristics specified in drawing 78051–136, revision A, or its equivalent, and the location of their seismic mass as mounted in the skull are shown in drawing C–1709, revision D.

(d) The six axis neck transducer shall have the dimensions, response characteristics, and sensitive axis locations specified in drawing C–1709, revision D and be mounted for testing as shown in Figures 20 and 21 of § 572.33, and in the assembly drawing 78051–218, revision T.

(e) The chest accelerometers shall have the dimensions, response characteristics, and sensitive mass locations specified in drawing 78051–136, revision A or its equivalent and be mounted as shown with adaptor assembly 78051–116, revision D for assembly into 78051–218, revision T.

(f) The chest deflection transducer shall have the dimensions and response characteristics specified in drawing 78051–342, revision A or its equivalent and be mounted in the chest deflection transducer assembly 78051–317, revision A for assembly into 78051–218, revision T.

(g) The thorax and knee impactor accelerometers shall have the dimensions and characteristics of Endevco Model 7231c or equivalent. Each accelerometer shall be mounted with its sensitive axis colinear with the pendulum's longitudinal centerline.

(h) The femur load cell shall have the dimensions, response characteristics, and sensitive axis locations specified in drawing 78051–265 or its equivalent and be mounted in assemblies 78051–46 and –47 for assembly into 78051–218, revision T.

(i) The outputs of acceleration and force-sensing devices installed in the dummy and in the test apparatus specified by this part are recorded in individual data channels that conform to requirements of Society of Automotive Engineers (SAE) Recommended Practice J211 Mar95, Instrumentation for Impact Tests, Parts 1 and 2. SAE J211 Mar95 sets forth the following channel classes:

(1) Head acceleration—Class 1000
(2) Neck forces—Class 1000
(3) Neck moments—Class 600
(4) Neck pendulum acceleration—Class 60
(5) Thorax and thorax pendulum acceleration—Class 180
(6) Thorax deflection—Class 180
(7) Knee pendulum acceleration—Class 600
(8) Femur force—Class 600

(j) Coordinate signs for instrumentation polarity conform to the sign convention shown in the document incorporated by § 572.31(a)(5).

(k) The mountings for sensing devices shall have no resonance frequency within range of 3 times the frequency range of the applicable channel class.

(l) Limb joints are set at lg, barely restraining the weight of the limb when it is extended horizontally. The force required to move a limb segment shall not exceed 2g throughout the range of limb motion.

(m) Performance tests of the same component, segment, assembly, or fully assembled dummy are separated in time by period of not less than 30 minutes unless otherwise noted.

(n) Surfaces of dummy components are not painted except as specified in this part or in drawings subtended by this part.

[51 FR 26701, July 25, 1986, as amended at 53 FR 8765, Mar. 17, 1988; 62 FR 27518, May 20, 1997; 63 FR 45965, Aug. 28, 1998]

Subpart F—Side Impact Dummy 50th Percentile Male

SOURCE: 55 FR 45766, Oct. 30, 1990, unless otherwise noted.

§ 572.40 Incorporated materials.

(a) The drawings, specifications, manual, and computer program referred to in this regulation that are not set forth in full are hereby incorporated in this part by reference. These materials are thereby made part of this regulation. The Director of the Federal Register has approved the materials incorporated by reference. For materials subject to change, only the specific version approved by the Director of the Federal Register and specified in the regulation are incorporated. A notice of any change will be published in the FEDERAL REGISTER. As a convenience

to the reader, the materials incorporated by reference are listed in the Finding Aids Table found at the end of this volume of the Code of Federal Regulations.

(b) The materials incorporated in this part by reference are available for examination in the general reference section of Docket 79–04, Docket Section, National Highway Traffic Safety Administration, room 5109, 400 Seventh St., S.W., Washington, D.C., 20590, telephone (202) 366–4949. Copies may be obtained from Reprographic Technologies, 9000 Virginia Manor Rd., Suite 210, Beltsville, MD, 20705, Telephone (301) 419–5070, Fax (301) 419–5069.

[55 FR 45766, Oct. 30, 1990, as amended at 63 FR 16140, Apr. 2, 1998]

§ 572.41 General description.

(a) The dummy consists of component parts and component assemblies (SA–SID–M001, revision C, dated September 12, 1996, and SA–SID–M001A, revision B, dated September 12, 1996), which are described in approximately 250 drawings and specifications that are set forth in § 572.5(a) of this chapter with the following changes and additions which are described in approximately 85 drawings and specifications (incorporated by reference; see § 572.40):

(1) The head assembly consists of the assembly specified in subpart B (§ 572.6(a)) and conforms to each of the drawings subtended under drawing SA 150 M010 and drawings specified in SA–SID–M010, dated August 13, 1987.

(2) The neck assembly consists of the assembly specified in subpart B (§ 572.7(a)) and conforms to each of the drawings subtended under drawing SA 150 M020 and drawings shown in SA–SID–M010, dated August 13, 1987.

(3) The thorax assembly consists of the assembly shown as number SID–053 and conforms to each applicable drawing subtended by number SA–SID–M030 revision A, dated May 18, 1994.

(4) The lumbar spine consists of the assembly specified in subpart B (§ 572.9(a)) and conforms to drawing SA 150 M050 and drawings subtended by SA–SID–M050 revision B, dated September 12, 1996, including the addition of Lumbar Spacers-Lower SID–SM–001 and Lumbar Spacers-Upper SID–SM–002 (both dated May 12, 1994), and Washer 78051–243.

(5) The abdomen and pelvis consist of the assembly specified in subpart B of this part (§ 572.9) and conform to the drawings subtended by SA 150 M060, the drawings subtended by SA–SID–M060 revision A, dated May 18, 1994, and the drawings subtended by SA–SID–087 sheet 1 revision H, dated May 18, 1994, and SA–SID–087 sheet 2 revision H.

(6) The lower limbs consist of the assemblies specified in subpart B (§ 572.10) shown as SA 150 M080 and SA 150 M081 in Figure 1 and SA–SID–M080 and SA–SID–M081, both dated August 13, 1987, and conform to the drawings subtended by those numbers.

(b) The structural properties of the dummy are such that the dummy conforms to the requirements of this subpart in every respect both before and after being used in vehicle tests specified in Standard No 214 § 571.214 of this chapter.

(c) Disassembly, inspection, and assembly procedures; external dimensions and weight; and a dummy drawing list are set forth in the Side Impact Dummy (SID) User's Manual, dated May 1994 except for pages 7, 20 and 23, and Appendix A (consisting of replacement pages 7, 20 and 23) dated January 20, 1998 (incorporated by reference; see § 572.40).

[55 FR 45766, Oct. 30, 1990, as amended at 59 FR 52091, Oct. 14, 1994; 63 FR 16140, Apr. 2, 1998]

§ 572.42 Thorax.

(a) When the thorax of a completely assembled dummy (SA–SID–M001A revision A, dated May 18, 1994, incorporated by reference; see § 572.40), appropriately assembled for right or left side impact, is impacted by a test probe conforming to § 572.44(a) at 14 fps in accordance with paragraph (b) of this section, the peak accelerations at the location of the accelerometers mounted on the thorax in accordance with § 572.44(b) shall be:

(1) For the accelerometer at the top of the Rib Bar on the struck side (LUR or RUR) not less than 37 g's and not more than 46 g's.

(2) For the accelerometer at the bottom of the Rib Bar on the struck side

(LLR or RLR) not less than 37 g's and not more than 46 g's.

(3) For the lower thoracic spine (T12) not less than 15 g's and not more than 22 g's.

(b) Test Procedure. (1) Adjust the dummy legs as specified in § 572.44(f). Seat the dummy on a seating surface as specified in § 572.44(h) with the limbs extended horizontally forward.

(2) Place the longitudinal centerline of the test probe at the lateral side of the chest at the intersection of the centerlines of the third rib and the Rib Bar on the desired side of impact. This is the left side if the dummy is to be used on the driver's side of the vehicle and the right side if the dummy is to be used on the passenger side of the vehicle. The probe's centerline is perpendicular to thorax's midsagittal plane.

(3) Align the test probe so that its longitudinal centerline coincides with the line formed by the intersection of the transverse and frontal planes perpendicular to the chest's midsagittal plane passing through the designated impact point.

(4) Position the dummy as specified in § 572.44(h), so that the thorax's midsagittal plane and tangential plane to the Hinge Mounting Block (Drawing SID–034) are vertical.

(5) Impact the thorax with the test probe so that at the moment of impact at the designated impact point, the probe's longitudinal centerline falls within 2 degrees of a horizontal line perpendicular to the dummy's midsagittal plane and passing through the designated impact point.

(6) Guide the probe during impact so that it moves with no significant lateral, vertical or rotational movement.

(7) Allow a time period of at least 20 minutes between successive tests of the chest.

[59 FR 52091, Oct. 14, 1994, as amended at 59 FR 52091, Oct. 14, 1994]

§ 572.43 Lumbar spine and pelvis.

(a) When the pelvis of a fully assembled dummy (SA–SID–M001A revision B, dated September 12, 1996, (incorporated by reference; see § 572.40) is impacted laterally by a test probe conforming to § 572.44(a) at 14 fps in accordance with paragraph (b) of this section, the peak acceleration at the location of the accelerometer mounted in the pelvis cavity in accordance with § 572.44(c) shall be not less than 40g and not more than 60g. The acceleration-time curve for the test shall be unimodal and shall lie at or above the +20g level for an interval not less than 3 milliseconds and not more than 7 milliseconds.

(b) Test Procedure. (1) Adjust the dummy legs as specified in § 572.44(f). Seat the dummy on a seating surface as specified in § 572.44(h) with the limbs extended horizontally forward.

(2) Place the longitudinal centerline of the test probe at the lateral side of the pelvis at a point 3.9 inches vertical from the seating surface and 4.8 inches ventral to a transverse vertical plane which is tangent to the back of the dummy's buttocks.

(3) Align the test probe so that at impact its longitudinal centerline coincides with the line formed by intersection of the horizontal and vertical planes perpendicular to the midsagittal plane passing through the designated impact point.

(4) Adjust the dummy so that its midsagittal plane is vertical and the rear surfaces of the thorax and buttocks are tangent to a transverse vertical plane.

(5) Impact the pelvis with the test probe so that at the moment of impact the probe's longitudinal centerline falls within 2 degrees of the line specified in paragraph (b)(3) of this section.

(6) Guide the test probe during impact so that it moves with no significant lateral, vertical or rotational movement.

(7) Allow a time period of at least 2 hours between successive tests of the pelvis.

[55 FR 45766, Oct. 30, 1990, as amended at 59 FR 52091, Oct. 14, 1994; 63 FR 16140, Apr. 2, 1998]

§ 572.44 Instrumentation and test conditions.

(a) The test probe used for lateral thoracic and pelvis impact tests is a 6 inch diameter cylinder that weighs 51.5 pounds including instrumentation. Its impacting end has a flat right angle face that is rigid and has an edge radius of 0.5 inches.

(b) Three accelerometers are mounted in the thorax for measurement of lateral accelerations with each accelerometer's sensitive axis aligned to be closely perpendicular to the thorax's midsagittal plane. The accelerometers are mounted in the following locations:

(1) One accelerometer is mounted on the thorax to lumbar adaptor (SID–005 revision F, dated May 18, 1994, incorporated by reference; see § 572.40) with seismic mass center located 0.5 inches toward the impact side, 0.1 inches upward and 1.86 inches rearward from the reference point shown in Figure 30 in appendix A to subpart F of part 572. Maximum permissible variation of the seismic location must not exceed 0.2 inches spherical radius.

(2) Two accelerometers are mounted, one on the top and the other at the bottom part of the Rib Bar (SID–024) on the struck side. Their seismic mass centers are at any distance up to .4 inches from a point on the Rib Bar surface located on its longitudinal center line .75 inches from the top for the top accelerometer and .75 inches from the bottom, for the bottom accelerometer.

(c) One accelerometer is mounted in the pelvis for measurement of the lateral acceleration with its sensitive axis perpendicular to the pelvic midsagittal plane. The accelerometer is mounted on the rear wall of the instrumentation cavity of the pelvis (SID–087 revision H, dated May 18, 1994, incorporated by reference; see § 572.40). The accelerometer's seismic mass with respect to the mounting bolt center line is 0.9 inches up, 0.7 inches to the left for left side impact and 0.03 inches to the left for right side impact, and 0.5 inches rearward from the rear wall mounting surface as shown in Figure 31 in appendix A to subpart F of part 572. Maximum permissible variation of the seismic location must not exceed 0.2 inches spherical radius.

(d) Instrumentation and sensors used must conform to the SAE J–211 (1980) recommended practice requirements (incorporated by reference; see § 572.40). The outputs of the accelerometers installed in the dummy are then processed with the software for the Finite Impulse Response (FIR) filter (FIR 100 software). The FORTRAN program for this FIR 100 software (FIR100 Filter Program, Version 1.0, July 16, 1990) is incorporated by reference in this part (see § 572.40). The data are processed in the following manner:

(1) Analog data recorded in accordance with SAE J–211 (1980) recommended practice channel class 1000 specification.

(2) Filter the data with a 300 Hz, SAE Class 180 filter;

(3) Subsample the data to a 1600 Hz sampling rate;

(4) Remove the bias from the subsampled data, and

(5) Filter the data with the FIR100 Filter Program (Version 1.0, July 16, 1990), which has the following characteristics—

(i) Passband frequency, 100 Hz.

(ii) Stopband frequency, 189 Hz.

(iii) Stopband gain, −50 db.

(iv) Passband ripple, 0.0225 db.

(e) The mountings for the spine, rib and pelvis accelerometers shall have no resonance frequency within a range of 3 times the frequency range of the applicable channel class.

(f) Limb joints of the test dummy are set at the force between 1–2 g's, which just supports the limbs' weight when the limbs are extended horizontally forward. The force required to move a limb segment does not exceed 2 g's throughout the range of limb motion.

(g) Performance tests are conducted at any temperature from 66 °F to 78 °F and at any relative humidity from 10 percent to 70 percent after exposure of the dummy to these conditions for a period of not less than 4 hours.

(h) For the performance of tests specified in §§ 572.42 and 572.43, the dummy is positioned as follows:

(1) The dummy is placed on a flat, rigid, clean, dry, horizontal smooth aluminum surface whose length and width dimensions are not less than 16 inches, so that the dummy's midsagittal plane is vertical and centered on the test surface. The dummy's torso is positioned to meet the requirements of § 572.42 and § 572.43. The seating surface is without the back support and the test dummy is positioned so that the dummy's midsagittal plane is vertical and centered on the seat surface.

(2) The legs are positioned so that their centerlines are in planes parallel to the midsagittal plane.

(3) Performance pre-tests of the assembled dummy are separated in time by a period of not less than 20 minutes unless otherwise specified.

(4) Surfaces of the dummy components are not painted except as specified in this part or in drawings subtended by this part.

[55 FR 45766, Oct. 30, 1990, as amended at 56 FR 47011, Sept. 17, 1991; 59 FR 52091, Oct. 14, 1994]

APPENDIX A TO SUBPART F OF PART 572—FIGURES

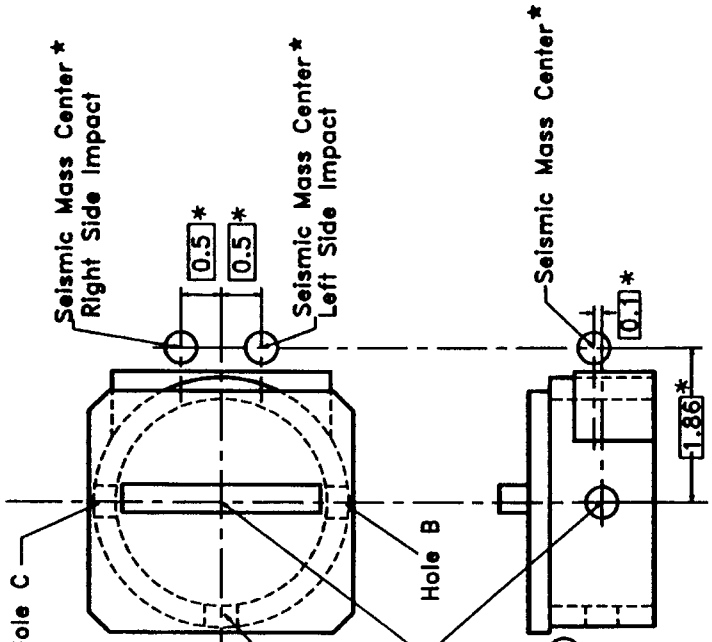

NOTES:

* BASIC DIMENSION (BOXED NUMBERS) ARE EXACT.

* SEISMIC MASS CENTER LOCATION NOT TO EXCEED A 0.2 SPHERICAL RADIUS VARIATION.

Accelerometer Seismic Mass Location on Assembly SID #005

FIGURE 30

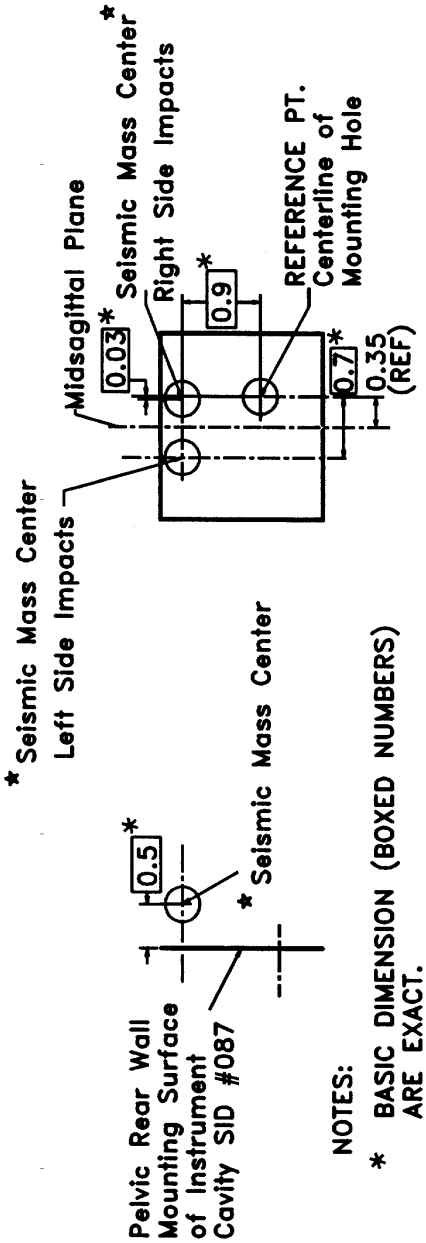

NOTES:

* BASIC DIMENSION (BOXED NUMBERS) ARE EXACT.

* SEISMIC MASS CENTER LOCATION NOT TO EXCEED A 0.2 SPHERICAL RADIUS VARIATION.

Pelvis Accelerometer Seismic Mass Location

FIGURE 31

[59 FR 52092, Oct. 14, 1994]

Subparts G–H [Reserved]

Subpart I—6-Year-Old Child

SOURCE: 56 FR 57836, Nov. 14, 1991, unless otherwise noted.

§ 572.70 Incorporation by reference.

(a) The drawings and specifications referred to in §§ 572.71(a) and 572.71(b) are hereby incorporated in subpart I by reference. These materials are thereby made part of this regulation. The Director of the Federal Register approved the materials incorporated by reference in accordance with 5 U.S.C. 552(a) and 1 CFR part 51. Copies of the materials may be inspected at NHTSA's Docket Section, 400 Seventh Street, SW., room 5109, Washington, DC, or at the Office of the Federal Register, 800 North Capitol Street, NW., suite 700, Washington, DC.

(b) The incorporated material is available as follows:

(1) Drawing number SA 106 C001 sheets 1 through 18, and the drawings listed in the parts lists described on sheets 8 through 17, are available from Reprographic Technologies, 9000 Virginia Manor Rd., Beltsville, MD 20705, Telephone (301) 210–5600, Fax (301) 210–5607.

(2) A User's Manual entitled, ''Six-Year-Old Size Child Test Dummy SA106C,'' October 28, 1991, is available from Reprographic Technologies at the address in paragraph (b)(1) of this section.

(3) SAE Recommended Practice J211, Instrumentation for Impact Test, June 1988, is available from the Society of Automotive Engineers, Inc., 400 Commonwealth Drive, Warrendale, PA 15096–0001.

[56 FR 57836, Nov. 14, 1991, as amended at 62 FR 44226, Aug. 20, 1997]

§ 572.71 General description.

(a) The representative 6-year-old dummy consists of a drawings and specifications package that contains the following materials:

(1) Technical drawings, specifications, and the parts list package shown in SA 106C 001, sheets 1 through 18, re-released July 11, 1997;

(2) A user's manual entitled, ''Six-Year-Old Size Child Test Dummy SA106C,'' October 28, 1991.

(b) The dummy is made up of the component assemblies set out in Table A:

TABLE A

Assembly drawing No.	Drawing title	Listed on drawing No.	Revision
SA 106C 010	Head Assembly	SA 106C 001, sheet 8	A
SA 106C 020	Neck Assembly	SA 106C 001, sheet 9	A
SA 106C 030	Thorax Assembly	SA 106C 001, sheet 10	C
SA 106C 030	Thorax Assembly	SA 106C 001, sheet 11	D
SA 106C 041	Arm Assembly (right)	SA 106C 001, sheet 14	A
SA 106C 042	Arm Assembly (left)	SA 106C 001, sheet 15	A
SA 106C 050	Lumbar Spine Assembly	SA 106C 001, sheet 12	A
SA 106C 060	Pelvis Assembly	SA 106C 001, sheet 13	A
SA 106C 071	Leg Assembly (right)	SA 106C 001, sheet 16	A
SA 106C 072	Leg Assembly (left)	SA 106C 001, sheet 17	A

(c) Adjacent segments are joined in a manner such that except for contacts existing under static conditions, there is no contact between metallic elements throughout the range of motion or under simulated crash-impact conditions.

(d) The structural properties of the dummy are such that the dummy conforms to this part in every respect both before and after its use in any test similar to those specified in Standard 213, Child Restraint Systems.

[56 FR 57836, Nov. 14, 1991, as amended at 62 FR 44226, Aug. 20, 1997]

§ 572.72 Head assembly and test procedure.

(a) *Head assembly*. The head consists of the assembly designated as SA 106 010 on drawing No. SA 106C 001, sheet 2, and conforms to each drawing listed on SA 106C 001, sheet 8.

(b) *Head assembly impact response requirements.* When the head is impacted by a test probe conforming to § 572.77(a)(1) at 7 feet per second (fps) according to the test procedure in paragraph (c) of this section, then the resultant head acceleration measured at the location of the accelerometer installed in the headform according to § 577.77(b) is not less than 130g and not more than 160g.

(1) The recorded acceleration-time curve for this test is unimodal at or above the 50g level, and lies at or above that level for an interval not less than 1.0 and not more than 2.0 milliseconds.

(2) The lateral acceleration vector does not exceed 5g.

(c) *Head test procedure.* The test procedure for the head is as follows:

(1) Seat and orient the dummy on a seating surface having a back support as specified in § 572.78(c), and adjust the joints of the limbs at any setting (between 1g and 2g) which just supports the limbs' weight when the limbs are extended horizontally and forward.

(2) Adjust the test probe so that its longitudinal center line is—

(i) At the forehead at the point of orthogonal intersection of the head midsagittal plane and the transverse plane which is perpendicular to the Z axis of the head as shown in Figure 40;

(ii) Located 2.7±0.1 inches below the top of the head measured along the Z axis, and;

(iii) Coincides within 2 degrees with the line made by the intersection of the horizontal and midsagittal planes passing through this point.

(3) Impact the head with the test probe so that at the moment of contact the probe's longitudinal center line falls within 2 degrees of a horizontal line in the dummy's midsagittal plane.

(4) Guide the test probe during impact so that there is no significant lateral, vertical, or rotational movement.

(5) Allow at least 60 minutes between successive head tests.

§ 572.73 Neck assembly and test procedure.

(a) *Neck assembly.* The neck consists of the assembly designated as SA 106C 020 on drawing SA 106C 001, sheet 2, and conforms to each drawing listed on SA 106C 001, sheet 9.

(b) *Neck assembly impact response requirements.* When the head-neck assembly (SA 106C 010 and SA 106C 020) is tested according to the test procedure in § 572.73(c), the head:

(1) Shall rotate, while translating in the direction of the pendulum preimpact flight, in reference to the pendulum's longitudinal center line a total of 78 degrees±6 degrees about the head's center of gravity; and

(2) Shall rotate to the extent specified in Table B at each indicated point in time, measured from time of impact, with the chordal displacement measured at the head's center of gravity.

(i) Chordal displacement at time ''T'' is defined as the straight line distance between the position relative to the pendulum arm of the head's center of gravity at time ''zero;'' and the position relative to the pendulum arm of the head's center of gravity at time T as illustrated by Figure 3 in § 572.11.

(ii) The peak resultant acceleration recorded at the location of the accelerometers mounted in the headform according to § 572.77(b) shall not exceed 30g.

TABLE B

Rotation (degrees)	Time (ms)±(2+.08T)	Chordal displacement (inches)±0.8
0	0	0
30	26	2.7
60	44	4.3
Maximum	68	5.8
60	101	4.4
30	121	2.4
0	140	0

(3) The pendulum shall not reverse direction until the head's center of gravity returns to the original ''zero'' time position relative to the pendulum arm.

(c) *Neck test procedure.* The test procedure for the neck is as follows:

(1) Mount the head and neck assembly on a rigid pendulum as specified in § 572.21, Figure 15, so that the head's midsagittal plane is vertical and coincides with the plane of motion of the pendulum's longitudinal center line. Attach the neck directly to the pendulum as shown in § 572.21, Figure 15.

(2) Release the pendulum and allow it to fall freely from a height such that the velocity at impact is 17.00±1.0 fps,

measured at the center of the accelerometer specified in § 572.21, Figure 15.

(3) Decelerate the pendulum to a stop with an acceleration-time pulse described as follows:

(i) Establish 5g and 20g levels on the a-t curve.

(ii) Establish t_1 at the point where the rising a-t curve first crosses the 5g level; t_2 at the point where the rising a-t curve first crosses the 20g level; t_3 at the point where the decaying a-t curve last crosses the 20g level; and t_4 at the point where the decaying a-t curve first crosses the 5g level.

(iii) $t_2 - t_1$ shall not be more than 3 milliseconds.

(iv) $t_3 - t_2$ shall not be more than 22 milliseconds, and not less than 19 milliseconds.

(v) $t_4 - t_3$ shall not be more than 6 milliseconds.

(vi) The average deceleration between t_2 and t_3 shall not be more than 26g, or less than 22g.

(4) Allow the neck to flex without the head or neck contacting any object other than the pendulum arm.

(5) Allow at least 60 minutes between successive tests.

[56 FR 57836, Nov. 14, 1991, as amended at 57 FR 4086, Feb. 3, 1992]

§ 572.74 Thorax assembly and test procedure.

(a) *Thorax assembly*. The thorax consists of the part of the torso assembly designated as SA 106C 030 on drawing SA 106C 001, sheet 2, Revision A, and conforms to each applicable drawing on SA 106C 001 sheet 10, Revision C (including Drawing number 6C–1610–1 thru –4, Revision A, titled ''Screw Button Head Socket'', dated September 30, 1996, and Drawing number 6C–1021, Revision B, titled ''Ballast, 6 Yr. Thoraxc (for 7267A)'', dated September 24, 1996), and sheet 11, Revision D (including Drawing number SA 6C–909, Revision A, titled ''Cover-chest Accelerometer'', dated September 21, 1996, and Drawing number 6C–1000–1, Revision C, titled ''Sternum Thoracic Weld Ass'y.'', dated September 24, 1996).

(b) *Thorax assembly requirements*. When the thorax is impacted by a test probe conforming to § 572.77(a) to 20±0.3 fps according to the test procedure in paragraph (c) of this section, the peak resultant accelerations at the accelerometers mounted in the chest cavity according to § 572.77(c) shall not be less than 43g and not more than 53g.

(1) The recorded acceleration-time curve for this test shall be unimodal at or above the 30g level, and shall lie at or above that level for an interval not less than 4 milliseconds and not more than 6 milliseconds.

(2) The lateral accelerations shall not exceed 5g.

(c) *Thorax test procedure*. The test procedure for the thorax is as follows:

(1) Seat and orient the dummy on a seating surface without back support as specified in § 572.78(c), and adjust the joints of the limbs at any setting (between 1g and 2g) which just supports the limbs' weight when the limbs are extended horizontally and forward, parallel to the midsagittal plane.

(2) Establish the impact point at the chest midsagittal plane so that the impact point is 2.25 inches below the longitudinal center of the clavicle retainer screw, and adjust the dummy so that the plane that bisects the No. 3 rib into upper and lower halves is horizontal ±1 degree.

(3) Place the longitudinal center line of the test probe so that it coincides with the designated impact point, and align the test probe so that at impact, the probe's longitudinal center line coincides (within 2 degrees) with the line formed at the intersection of the horizontal and midsagittal planes and passing through the designated impact point.

(4) Impact the thorax with the test probe so that at the moment of contact the probe's longitudinal center line falls within 2 degrees of a horizontal line in the dummy's midsagittal plane.

(5) Guide the test probe during impact so that there is no significant lateral, vertical, or rotational movement.

(6) Allow at least 30 minutes between successive tests.

[56 FR 57836, Nov. 14, 1991, as amended at 60 FR 2897, Jan. 12, 1995; 62 FR 44227, Aug. 20, 1997]

§ 572.75 Lumbar spine, abdomen, and pelvis assembly and test procedure.

(a) *Lumbar spine, abdomen, and pelvis assembly*. The lumbar spine, abdomen, and pelvis consist of the part of the

torso assembly designated as SA 106C 50 and 60 on drawing SA 106C 001, sheet 2, and conform to each applicable drawing listed on SA 106C 001, sheets 12 and 13.

(b) *Lumbar spine, abdomen, and pelvis assembly response requirements.* When the lumbar spine is subjected to a force continuously applied according to the test procedure set out in paragraph (c) of this section, the lumbar spine assembly shall—

(1) Flex by an amount that permits the rigid thoracic spine to rotate from the torso's initial position, as defined in (c)(3), by 40 degrees at a force level of not less that 46 pounds and not more than 52 pounds, and

(2) Straighten upon removal of the force to within 5 degrees of its initial position when the force is removed.

(c) *Lumbar spine, abdomen, and pelvis test procedure.* The test procedure for the lumbar spine, abdomen, and pelvis is as follows:

(1) Remove the dummy's head-neck assembly, arms, and lower legs, clean and dry all component surfaces, and seat the dummy upright on a seat as specified in Figure 42.

(2) Adjust the dummy by—

(i) Tightening the femur ballflange screws at each hip socket joint to 50 inch-pounds torque;

(ii) Attaching the pelvis to the seating surface by a bolt D/605 as shown in Figure 42.

(iii) Attaching the upper legs at the knee joints by the attachments shown in drawing Figure 42.

(iv) Tightening the mountings so that the pelvis-lumbar joining surface is horizontal; and

(v) Removing the head and neck, and installing a cylindrical aluminum adapter (neck adapter) of 2.0 inches diameter and 2.60 inches length as shown in Figure 42.

(3) The initial position of the dummy's torso is defined by the plane formed by the rear surfaces of the shoulders and buttocks which is three to seven degrees forward of the transverse vertical plane.

(4) Flex the thorax forward 50 degrees and then rearward as necessary to return the dummy to its initial torso position, unsupported by external means.

(5) Apply a forward pull force in the midsagittal plane at the top of the neck adapter so that when the lumbar spine flexion is 40 degrees, the applied force is perpendicular to the thoracic spine box.

(i) Apply the force at any torso deflection rate between 0.5 and 1.5 degrees per second, up to 40 degrees of flexion.

(ii) For 10 seconds, continue to apply a force sufficient to maintain 40 degrees of flexion, and record the highest applied force during the 10 second period.

(iii) Release all force as rapidly as possible, and measure the return angle 3 minutes after the release.

§ 572.76 Limbs assembly and test procedure.

(a) *Limbs assembly.* The limbs consist of the assemblies designated as SA 106C 041, SA 106C 042, SA 106C 071, and SA 106C 072, on drawing No. SA 106C 001, sheet 2, and conform to each applicable drawing listed on SA 106C 001, sheets 14 through 17.

(b) *Limbs assembly impact response requirement.* When each knee is impacted at 7.0±0.1 fps, according to paragraph (c) of this section, the maximum force on the femur shall not be more than 1060 pounds and not less than 780 pounds, with a duration above 400 pounds of not less than 0.8 milliseconds.

(c) *Limbs test procedure.* The test procedure for the limbs is as follows:

(1) Seat and orient the dummy without back support on a seating surface that is 11±0.2 inches above a horizontal (floor) surface as specified in § 572.78(c).

(i) Orient the dummy as specified in Figure 43 with the hip joint adjustment at any setting between 1g and 2g.

(ii) Place the dummy legs in a plane parallel to the dummy's midsagittal plane with the knee pivot center line perpendicular to the dummy's midsagittal plane, and with the feet flat on the horizontal (floor) surface.

(iii) Adjust the feet and lower legs until the line between the midpoint of each knee pivot and each ankle pivot is within 2 degrees of the vertical.

(2) If necessary, reposition the dummy so that at the level one inch below the seating surface, the rearmost

point of the dummy's lower legs remains not less than 3 inches and not more than 6 inches forward of the forward edge of the seat.

(3) Align the test probe specified in § 572.77(a) with the longitudinal center line of the femur force gauge, so that at impact, the probe's longitudinal center line coincides with the sensor's longitudinal center line within ±2 degrees.

(4) Impact the knee with the test probe moving horizontally and parallel to the midsagittal plane at the specified velocity.

(5) Guide the test probe during impact so that there is no significant lateral, vertical, or rotational movement.

§ 572.77 Instrumentation.

(a)(1) *Test probe.* For the head, thorax, and knee impact test, use a test probe that is rigid, of uniform density and weighs 10 pounds and 6 ounces, with a diameter of 3 inches; a length of 13.8 inches; and an impacting end that has a rigid flat right face and edge radius of 0.5 inches.

(2) The head and thorax assembly may be instrumented either with a Type A or Type B accelerometer.

(i) Type A accelerometer is defined in drawing SA 572 S1.

(ii) Type B accelerometer is defined in drawing SA 572 S2.

(b) *Head accelerometers.* (1) Install accelerometers in the head as shown in drawing SA 106C 001 sheet 1 using suitable spacers or adaptors as needed to affix them to the horizontal transverse bulkhead so that the sensitive axes of the three accelerometers intersect at the point in the midsagittal plane located 0.4 inches below the intersection of a line connecting the longitudinal center lines of the roll pins in either side of the dummy's head with the head's midsagittal plane.

(2) The head has three orthogonally mounted accelerometers aligned as follows:

(i) Align one accelerometer so that its sensitive axis is perpendicular to the horizontal bulkhead in the midsagittal plane.

(ii) Align the second accelerometer so that its sensitive axis is parallel to the horizontal bulkhead, and perpendicular to the midsagittal plane.

(iii) Align the third accelerometer so that its sensitive axis is parallel to the horizontal bulkhead in the midsagittal plane.

(iv) The seismic mass center for any of these accelerometers may be at any distance up to 0.4 inches from the axial intersection point.

(c) *Thoracic accelerometers.* (1) Install accelerometers in the thoracic assembly as shown in drawing SA 106C 001, sheet 1, using suitable spacers and adaptors to affix them to the frontal surface of the spine assembly so that the sensitive axes of the three accelerometers intersect at a point in the midsagittal plane located 0.95 inches posterior of the spine mounting surface, and 0.55 inches below the horizontal centerline of the two upper accelerometer mount attachment hole centers.

(2) The sternum-thoracic assembly has three orthogonally mounted accelerometers aligned as follows:

(i) Align one accelerometer so that its sensitive axis is parallel to the attachment surface in the midsagittal plane.

(ii) Align the second accelerometer so that its sensitive axis is parallel to the attachment surface, and perpendicular to the midsagittal plane.

(iii) Align the third accelerometer so that its sensitive axis is perpendicular to the attachment surface in the midsagittal plane.

(iv) The seismic mass center for any of these accelerometers may be at any distance up to 0.4 inches of the axial intersection point.

(d) *Femur-sensing device.* Install a force-sensing device SA 572–S10 axially in each femur shaft as shown in drawing SA 106C 072 and secure it to the femur assembly so that the distance measured between the center lines of two attachment bolts is 3.00 inches.

(e) *Limb joints.* Set the limb joints at lg, barely restraining the limb's weight when the limb is extended horizontally, and ensure that the force required to move the limb segment does not exceed 2g throughout the limb's range of motion.

(f) *Recording outputs.* Record the outputs of acceleration and force-sensing devices installed in the dummy and in the test apparatus specified in this

part, in individual channels that conform to the requirements of SAE Recommended Practice J211, October 1988, with channel classes as set out in the following table C.

TABLE C

Device	Channel
Head acceleration	Class 1000
Pendulum acceleration	Class 60
Thorax acceleration	Class 180
Femur-force	Class 600

The mountings for sensing devices shall have no resonance frequency within a range of 3 times the frequency range of the applicable channel class.

§ 572.78 Performance test conditions.

(a) Conduct performance tests at any temperature from 66 °F to 78 °F, and at any relative humidity from 10 percent to 70 percent, but only after having first exposed the dummy to these conditions for a period of not less than 4 hours.

(b) For the performance tests specified in § 572.72 (head), § 572.74 (thorax), § 572.75 (lumbar spine, abdomen, and pelvis), and § 572.76 (limbs), position the dummy as set out in paragraph (c) of this section.

(c) Place the dummy on a horizontal seating surface covered by teflon sheeting so that the dummy's midsagittal plane is vertical and centered on the test surface.

(1) The seating surface is flat, rigid, clean, and dry, with a smoothness not exceeding 40 microinches, a length of at least 16 inches, and a width of at least 16 inches.

(2) For head impact tests, the seating surface has a vertical back support whose top is 12.4±0.2 inches above the horizontal surface, and the rear surfaces of the dummy's back and buttocks touch the back support as shown in Figure 40.

(3) For the thorax, lumbar spine, and knee tests, the horizontal surface is without a back support as shown in Figure 41 (for the thorax); Figure 42 (for the lumbar spine); and Figure 43 (for the knee).

(4) Position the dummy's arms and legs so that their center lines are in planes parallel to the midsagittal plane.

(5) Adjust each shoulder yoke so that with its upper surface horizontal, a yoke is at the midpoint of its anterior-posterior travel.

(6) Adjust the dummy for head and knee impact tests so that the rear surfaces of the shoulders and buttocks are tangent to a transverse vertical plane.

(d) The dummy's dimensions are specified in drawings SA 106C 001, sheet 3, Revision A, July 11, 1997, and sheets 4 through 6.

(e) Unless otherwise specified in this regulation, performance tests of the same component, segment, assembly or fully assembled dummy are separated in time by a period of not less than 20 minutes.

(f) Unless otherwise specified in this regulation, the surfaces of the dummy components are not painted.

[56 FR 57836, Nov. 14, 1991, as amended at 62 FR 44227, Aug. 20, 1997]

FIGURE 40
HEAD IMPACT TEST SET-UP

43

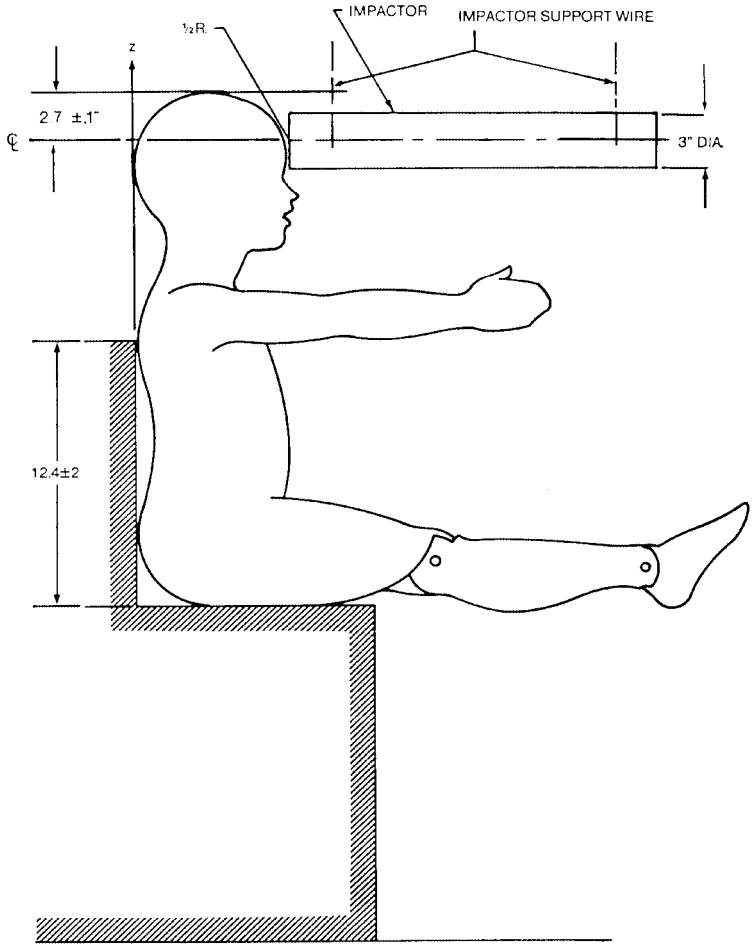

NOTES: 1. DUMMY IMPACT SENSORS NOT USED IN THIS TEST MAY BE REPLACED BY EQUIVALENT DEAD WEIGHTS.

2. NO EXTERNAL SUPPORTS ARE REQUIRED ON THE DUMMY TO MEET SET-UP SPECIFICATIONS.

3. THE MIDSAGITTAL PLANE OF THE DUMMY IS VERTICAL WITHIN +/–1 DEG.

4. THE MIDSAGITTAL PLANE OF THE HEAD IS CENTERED WITH RESPECT TO THE LONGITUDINAL CENTERLINE OF THE PENDULUM WITHIN 0.12 IN.

FIGURE 41
THORAX IMPACT TEST SET-UP

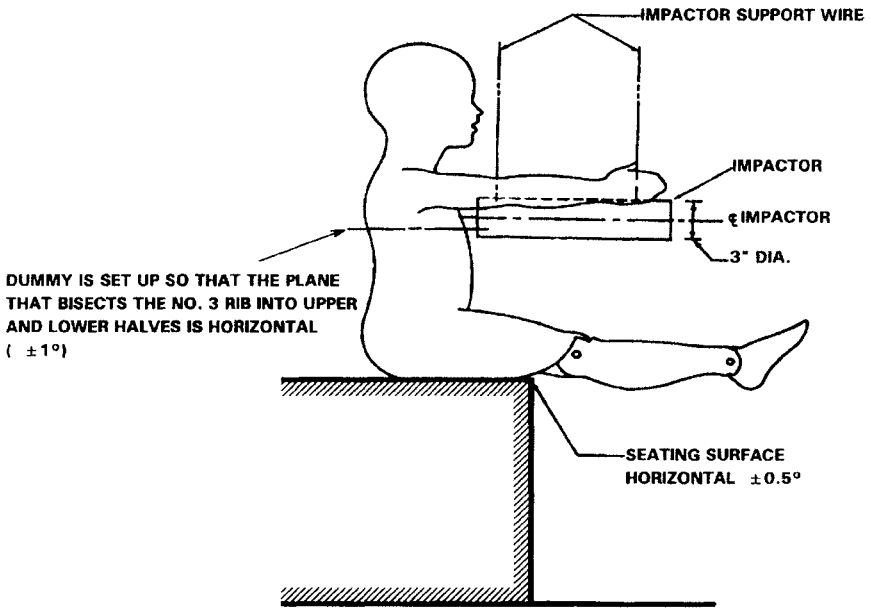

NOTES:

1. DUMMY IMPACT SENSORS NOT USED IN THIS TEST MAY BE REPLACED BY EQUILVALENT DEAD WEIGHTS.
2. NO EXTERNAL SUPPORTS ARE REQUIRED ON THE DUMMY TO MEET SET-UP SPECIFICATIONS.
3. THE MIDSAGITTAL PLANE OF THE DUMMY IS VERTICAL WITHIN +/-1 DEG.
4. THE MIDSAGITTAL PLANE OF THE THORAX IS CENTERED WITH RESPECT TO THE LONGITUDINAL CENTERLINE OF THE PENDULUM WITHIN 0.12 IN.

[60 FR 2898, Jan. 12, 1995]

FIGURE 42
LUMBAR SPINE FLEXION TEST SET-UP

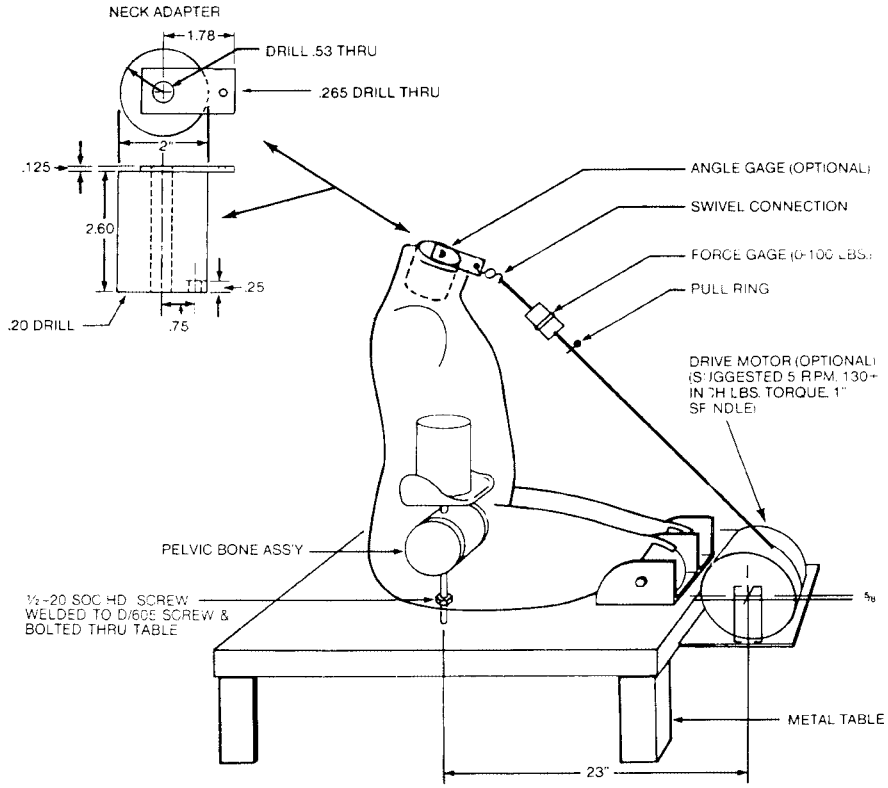

NOTES: 1. DUMMY IMPACT SENSORS NOT USED IN THIS TEST MAY BE REPLACED BY EQUIVALENT DEAD WEIGHTS.

2. NO EXTERNAL SUPPORTS ARE REQUIRED ON THE DUMMY TO MEET SET-UP SPECIFICATIONS.

3. THE MIDSAGITTAL PLANE OF THE DUMMY IS VERTICAL WITHIN + /−1 DEG.

4. THE DUMMY IN THE SEATED POSITION IS FIRMLY AFFIXED TO THE TEST BENCH AT THE PELVIC BONE AND AT THE KNEES.

5. THE PULL-FLEXION FORCE, APPLIED THROUGH A RIGID NECK ADAPTOR WHICH IS MOUNTED ON TOP OF THE THORACIC STERNUM ASSEMBLY (C/601), IS ALIGNED WITH THE MIDSAGITTAL PLANE OF THE DUMMY WITHIN +/−1 DEG.

6. THE SWIVEL FOR THE FORCE MEASURING SENSOR MUST NOT BIND OR BOTTOM OUT THROUGH THE ENTIRE LOADING CYCLE.

46

FIGURE 43
KNEE IMPACT TEST SET-UP

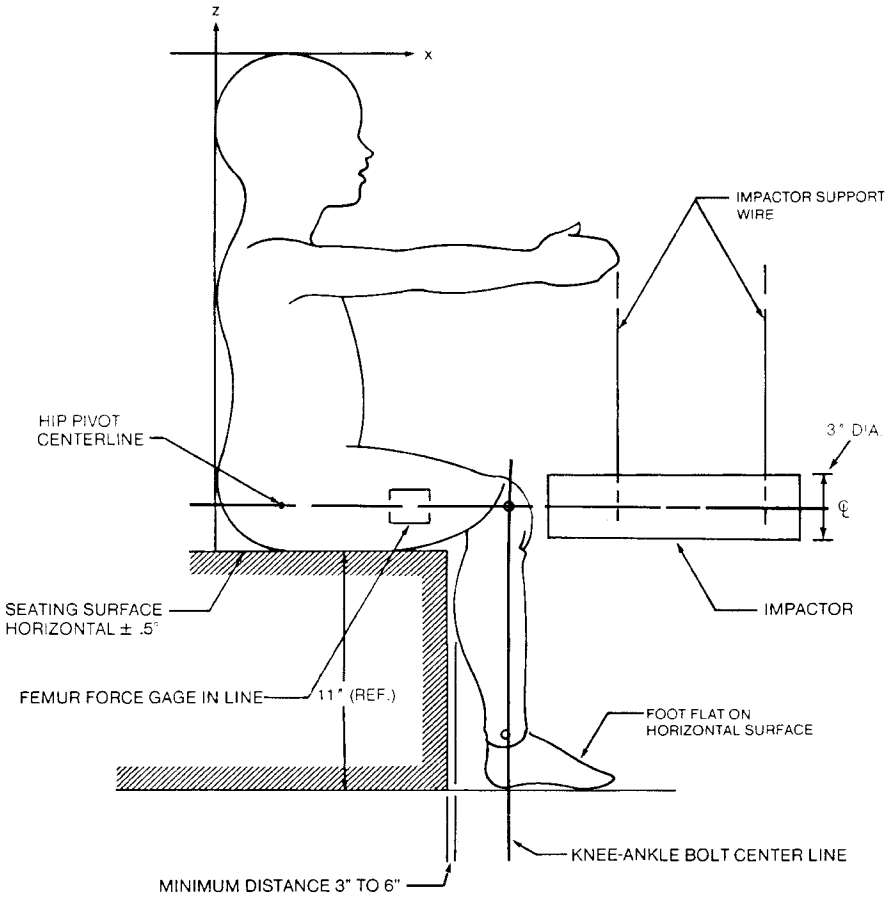

NOTES: 1. DUMMY IMPACT SENSORS NOT USED IN THIS TEST MAY BE REPLACED BY EQUIVALENT DEAD WEIGHTS.

2. NO EXTERNAL SUPPORTS ARE REQUIRED ON THE DUMMY TO MEET SET-UP SPECIFICATIONS.

3. THE MIDSAGITTAL PLANE OF THE DUMMY IS VERTICAL WITHIN +/−1 DEG.

4. CENTERLINE OF THE IMPACTED FEMUR IS ALIGNED WITH THE CENTERLINE OF THE IMPACTOR AND THE PLANE OF THE IMPACTOR MOTION WITHIN +/−1 DEG.

Subpart J—9-Month Old Child

SOURCE: 56 FR 41080, Aug. 19, 1991, unless otherwise noted.

§ 572.80 Incorporated materials.

The drawings and specifications referred to in § 572.81(a) that are not set forth in full are hereby incorporated in

this part by reference. These materials are thereby made part of this regulation. The Director of the Federal Register approved the materials incorporated by reference in accordance with 5 U.S.C. 552(a) and 1 CFR part 51. Copies of the materials may be obtained from Rowley-Scher Reprographics, Inc., 1216 K Street, NW., Washington, DC 20002, telephone (202) 628–6667. Copies are available for inspection in the general reference section of Docket 89–11, Docket Section, National Highway Traffic Safety Administration, room 5109, 400 Seventh Street, SW., Washington, DC, or at the Office of the Federal Register, 800 North Capitol Street, NW., suite 700, Washington, DC.

§ 572.81 General description.

(a) The dummy consists of: (1) The assembly specified in drawing LP 1049/A, March 1979, which is described in its entirety by means of approximately 54 separate drawings and specifications, 1049/1 through 1049/54; and (2) a parts list LP 1049/0 (5 sheets); and (3) a report entitled, ''The TNO P3/4 Child Dummy Users Manual,'' January 1979, published by Instituut voor Wegtransportmiddelen TNO.

(b) Adjacent dummy segments are joined in a manner such that throughout the range of motion and also under simulated crash-impact conditions there is no contact between metallic elements except for contacts that exist under static conditions.

(c) The structural properties of the dummy are such that the dummy conforms to this part in every respect both before and after being used in dynamic tests such as that specified in Standard No. 213 of this chapter (§ 571.213).

§ 572.82 Head.

The head consists of the assembly shown in drawing LP 1049/A and conforms to each of the applicable drawings listed under LP 1049/0 through 54.

§ 572.83 Head-neck.

The head-neck assembly shown in drawing 1049/A consists of parts specified as items 1 through 16 and in item 56.

§ 572.84 Thorax.

The thorax consists of the part of the torso shown in assembly drawing LP 1049/A and conforms to each of the applicable drawings listed under LP 1049/0 through 54.

§ 572.85 Lumbar spine flexure.

(a) When subjected to continuously applied force in accordance with paragraph (b) of this section, the lumbar spine assembly shall flex by an amount that permits the thoracic spine to rotate from its initial position in accordance with Figure No. 18 of § 572.21 (49 CFR part 572) by 40 degrees at a force level of not less than 18 pounds and not more than 22 pounds, and straighten upon removal of the force to within 5 degrees of its initial position.

(b) *Test procedure.* (1) The lumbar spine flexure test is conducted on a dummy assembly as shown in drawing LP 1049/A, but with the arms (which consist of parts identified as items 17 through 30) and all head-neck parts (identified as items 1 through 13 and 59 through 63), removed.

(2) With the torso assembled in an upright position, adjust the lumbar cable by tightening the adjustment nut for the lumbar vertebrae until the spring is compressed to ⅔ of its unloaded length.

(3) Position the dummy in an upright seated position on a seat as indicated in Figure No. 18 of § 572.21 (lower legs do not need to be removed, but must be clamped firmly to the seating surface), ensuring that all dummy component surfaces are clean, dry and untreated unless otherwise specified.

(4) Firmly affix the dummy to the seating surface through the pelvis at the hip joints by suitable clamps that also prevent any relative motion with respect to the upper legs during the test in § 572.65(c)(3) of this part. Install a pull attachment at the neck to torso juncture as shown in Figure 18 of § 572.21.

(5) Flex the thorax forward 50 degrees and then rearward as necessary to return it to its initial position.

(6) Apply a forward pull force in the midsagittal plane at the top of the neck adapter so that at 40 degrees of the lumbar spine flexion the applied force is perpendicular to the thoracic

spine box. Apply the force at any torso deflection rate between 0.5 and 1.5 degrees per second up to 40 degrees of flexion but no further; maintain 40 degrees of flexion for 10 seconds, and record the highest applied force during that time. Release all force as rapidly as possible and measure the return angle three minutes after release.

§ 572.86 Test conditions and dummy adjustment.

(a) With the complete torso on its back lying on a horizontal surface and the neck assembly mounted and shoulders on the edge of the surface, adjust the neck such that the head bolt is lowered 0.40 ± 0.05 inches (10 ± 1 mm) after a vertically applied load of 11.25 pounds (50 N) applied to the head bolt is released.

(b) With the complete torso on its back with the adjusted neck assembly as specified in § 572.66(a), and lying on a horizontal surface with the shoulders on the edge of the surface, mount the head and tighten the head bolt and nut firmly, with the head in horizontal position. Adjust the head joint at the force between 1–2g, which just supports the head's weight.

(c) Using the procedures described below, limb joints are set at the force between 1–2g, which just supports the limbs' weight when the limbs are extended horizontally forward:

(1) With the complete torso lying with its front down on a horizontal surface, with the hip joint just over the edge of the surface, mount the upper leg and tighten hip joint nut firmly. Adjust the hip joint by releasing the hip joint nut until the upper leg just starts moving.

(2) With the complete torso and upper leg lying with its front up on a horizontal surface, with the knee joint just over the edge of the surface, mount the lower leg and tighten knee joint firmly. Adjust the knee joint by releasing the knee joint nut until the lower leg just starts moving.

(3) With the torso in an upright position, mount the upper arm and tighten firmly the adjustment bolts for the shoulder joint with the upper arm placed in a horizontal position. Adjust the shoulder joint by releasing the shoulder joint nut until the upper arm just starts moving.

(4) With the complete torso in an upright position and upper arm in a vertical position, mount the forearm in a horizontal position and tighten the elbow hinge bolt and nut firmly. Adjust the elbow joint nut until the forearm just starts moving.

(d) With the torso assembled in an upright position, the adjustment nut for the lumbar vertebrae is tightened until the spring is compressed to ⅔ of its unloaded length.

(e) Performance tests are conducted at any temperature from 66 to 78 degrees F and at any relative humidity from 10 percent to 70 percent after exposure of the dummy to these conditions for a period of not less than four hours.

(f) Performance tests of the same component, segment, assembly or fully assembled dummy are separated in time by a period of not less than 20 minutes unless otherwise specified.

(g) Surfaces of the dummy components are not painted except as specified in the part or in drawings incorporated by this part.

Subpart K—Newborn Infant

SOURCE: 58 FR 3232, Jan. 8, 1993, unless otherwise noted.

§ 572.90 Incorporation by reference.

(a) The drawings and specifications referred to in § 572.91(a) are hereby incorporated in subpart K by reference. These materials are thereby made part of this regulation. The Director of the Federal Register approved that materials incorporated by reference in accordance with 5 U.S.C. 552(a) and 1 CFR part 51. Copies of the materials may be inspected at NHTSA's Docket Section, 400 Seventh Street, SW., room 5109, Washington, DC, or at the Office of the Federal Register, 800 North Capitol Street, NW., suite 700, Washington, DC.

(b) The incorporated material is available as follows:

(1) Drawing numbers 126–0000 through 126–0015 (sheets 1 through 3), 126–0017 through 126–0027, and a parts list entitled ''Parts List for CAMI Newborn Dummy,'' are available from Reprographic Technologies, 1111 14th

Street, NW., Washington, DC 20005. (202) 628–6667.

(2) A construction manual entitled, ''Construction of the Newborn Infant Dummy'' (July 1992) is available from Reprographic Technologies at the address in paragraph (b)(1) of this section.

§ 572.91 General description.

(a) The representative newborn infant dummy consists of a drawings and specifications package that contains the following materials:

(1) Drawing numbers 126–0000 through 126–0015 (sheets 1 through 3), 126–0017 through 126–0027, and a parts list entitled ''Parts List for CAMI Newborn Dummy''; and,

(2) A construction manual entitled, ''Construction of the Newborn Infant Dummy'' (July 1992).

(b) The structural properties of the dummy are such that the dummy conforms to this part in every respect both before and after being used in dynamic tests specified in Standard No. 213 of this chapter (§ 571.213).

Subpart L—Free Motion Headform

SOURCE: 60 FR 43058, Aug. 18, 1995, unless otherwise noted.

§ 572.100 Incorporation by Reference.

(a) The drawings and specifications referred to in § 572.101 are hereby incorporated in subpart L by reference. These materials are thereby made part of this regulation. The Director of the Federal Register approved the materials incorporated by reference in accordance with 5 U.S.C. 552(a) and 1 CFR part 51. Copies of the materials may be inspected at NHTSA's Docket Section, 400 Seventh Street, S.W., room 5109, Washington, DC, or at the Office of the Federal Register, 800 North Capitol Street, N.W., Washington, DC.

(b) The incorporated material is available as follows:

(1) Drawing number 92041–001, ''Head Form Assembly,'' (November 30, 1992); drawing number 92041–002, ''Skull Assembly,'' (November 30, 1992); drawing number 92041–003, ''Skull Cap Plate Assembly,'' (November 30, 1992); drawing number 92041–004, ''Skull Cap Plate,'' (November 30, 1992); drawing number 92041–005, ''Threaded Pin,'' (November 30, 1992); drawing number 92041–006, ''Hex Nut,'' (November 30, 1992); drawing number 92041–008, ''Head Skin without Nose,'' (November 30, 1992, as amended March 6, 1995); drawing number 92041–009, ''Six-Axis Load Cell Simulator Assembly,'' (November 30, 1992); drawing number 92041–011, ''Head Ballast Weight,'' (November 30, 1992); drawing number 92041–018, ''Head Form Bill of Materials,'' (November 30, 1992); drawing number 78051–148, ''Skull-Head (cast) Hybrid III,'' (May 20, 1978, as amended August 17, 1978); drawing number 78051–228/78051–229, ''Skin- Hybrid III,'' (May 20, 1978, as amended through September 24, 1979); drawing number 78051–339, ''Pivot Pin-Neck Transducer,'' (May 20, 1978, as amended May 14, 1986); drawing number 78051–372, ''Vinyl Skin Formulation Hybrid III,'' (May 20, 1978); and drawing number C–1797, ''Neck Blank, (August 1, 1989); drawing number SA572–S4, ''Accelerometer Specification,'' (November 30, 1992), are available from Reprographic Technologies, 1111 14th Street, N.W., Washington, DC 20005.

(2) A user's manual entitled ''Free-Motion Headform User's Manual,'' version 2, March 1995, is available from NHTSA's Docket Section at the address in paragraph (a) of this section.

(3) SAE Recommended Practice J211, OCT 1988, ''Instrumentation for Impact Tests,'' Class 1000, is available from The Society of Automotive Engineers, Inc., 400 Commonwealth Drive, Warrendale, PA 15096.

§ 572.101 General description.

(a) The free motion headform consists of the component assembly which is shown in drawings 92041–001 (incorporated by reference; see § 572.100), 92041–002 (incorporated by reference; see § 572.100), 92041–003 (incorporated by reference; see § 572.100), 92041–004 (incorporated by reference; see § 572.100), 92041–005 (incorporated by reference; see § 572.100), 92041–006 (incorporated by reference; see § 572.100), 92041–008 (incorporated by reference; see § 572.100), 92041–009 (incorporated by reference; see § 572.100), 92041–011 (incorporated by reference; see § 572.100), 78051–148 (incorporated by reference; see § 572.100), 78051–228/78051–229

(incorporated by reference; see § 572.100), 78051–339 (incorporated by reference; see § 572.100), 78051–372 (incorporated by reference; see § 572.100), C–1797 (incorporated by reference; see § 572.100), and SA572–S4 (incorporated by reference; see § 572.100).

(b) Disassembly, inspection, and assembly procedures, and sign convention for the signal outputs of the free motion headform accelerometers, are set forth in the Free-Motion Headform User's Manual (incorporated by reference; see § 572.100).

(c) The structural properties of the headform are such that it conforms to this part in every respect both before and after being used in the test specified in Standard No. 201 of this chapter (§ 571.201).

(d) The outputs of accelerometers installed in the headform are recorded in individual data channels that conform to the requirements of SAE Recommended Practice J211, OCT 1988, ''Instrumentation for Impact Tests,'' Class 1000 (incorporated by reference; see § 572.100).

§ 572.102 Drop test.

(a) When the headform is dropped from a height of 14.8 inches in accordance with paragraph (b) of this section, the peak resultant accelerations at the location of the accelerometers mounted in the headform as shown in drawing 92041–001 (incorporated by reference; see § 572.100) shall not be less than 225g, and not more than 275g. The acceleration/time curve for the test shall be unimodal to the extent that oscillations occurring after the main acceleration pulse are less than ten percent (zero to peak) of the main pulse. The lateral acceleration vector shall not exceed 15g (zero to peak).

(b) *Test procedure.* (1) Soak the headform in a test environment at any temperature between 19 degrees C. to 26 degrees C. and at a relative humidity from 10 percent to 70 percent for a period of at least four hours prior to its use in a test.

(2) Clean the headform's skin surface and the surface of the impact plate with 1,1,1 Trichloroethane or equivalent.

(3) Suspend the headform, as shown in Figure 50. Position the forehead below the chin such that the skull cap plate is at an angle of 28.5 ±0.5 degrees with the impact surface when the midsagittal plane is vertical.

(4) Drop the headform from the specified height by means that ensure instant release onto a rigidly supported flat horizontal steel plate, which is 2 inches thick and 2 feet square. The plate shall have a clean, dry surface and any microfinish of not less than 8 microinches 203.2×10^{-6} mm (rms) and not more than 80 microinches 2032×10^{-6} mm (rms).

(5) Allow at least 3 hours between successive tests on the same headform.

§ 572.103 Test conditions and instrumentation.

(a) Headform accelerometers shall have dimensions, response characteristics, and sensitive mass locations specified in drawing SA572–S4 (incorporated by reference; see § 572.100) and be mounted in the headform as shown in drawing 92041–001 (incorporated by reference; see § 572.100).

(b) The outputs of accelerometers installed in the headform are recorded in individual data channels that conform to the requirements of SAE Recommended Practice J211, OCT 1988, ''Instrumentation for Impact Tests,'' Class 1000 (incorporated by reference; see § 572.100).

(c) Coordinate signs for instrumentation polarity conform to the sign convention shown in the Free-Motion Headform User's Manual (incorporated by reference; see § 572.100).

(d) The mountings for accelerometers shall have no resonant frequency within a range of 3 times the frequency range of the applicable channel class.

Figure 50

HEADFORM DROP TEST
Set-Up Specifications

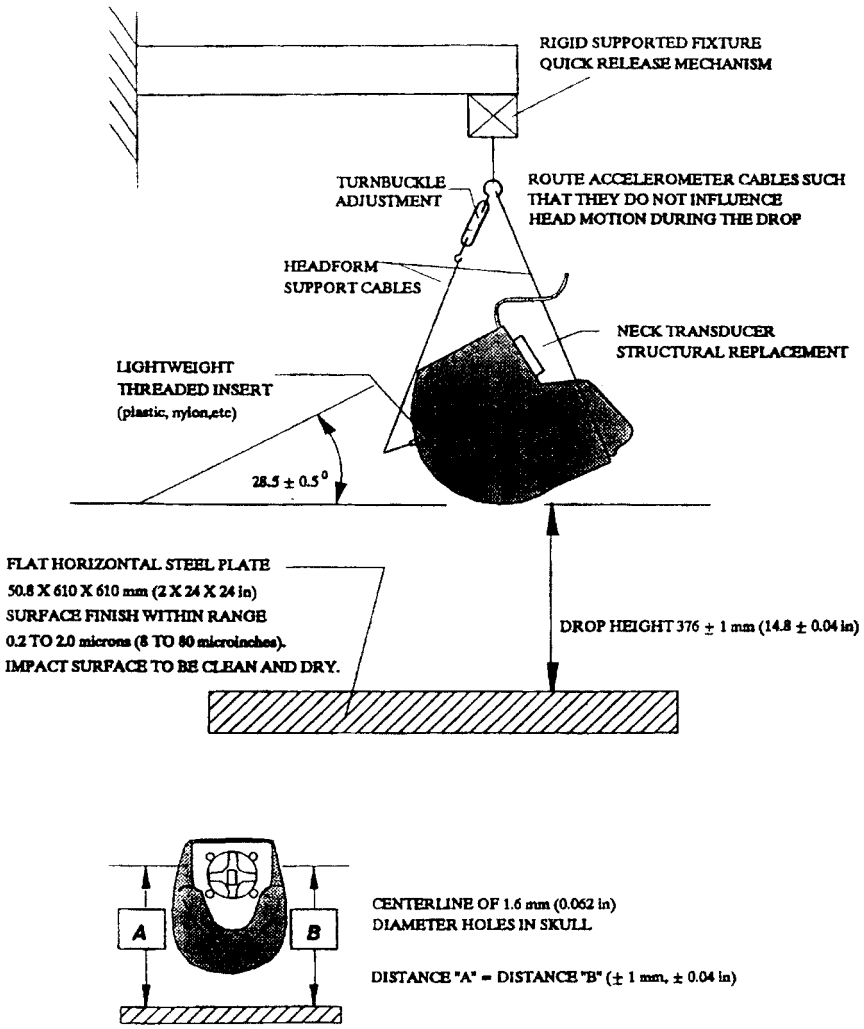

[60 FR 43060, Aug. 18, 1995]

Subpart M—Side Impact Hybrid Dummy 50th Percentile Male

SOURCE: 63 FR 41470, Aug. 4, 1998, unless otherwise noted.

§572.110 Materials incorporated by reference.

(a) The following materials are hereby incorporated by reference in Subpart M:

(1) The Anthropomorphic Test Dummy Parts List, SID/Hybrid III part 572, subpart M, dated May 10, 1997.

(2) The SID/Hybrid III Part 572 Subpart M User's Manual, dated May 1997.

(3) Drawing number 96–SIDH3–001, titled, ''Head-Neck Bracket,'' dated August 30, 1996.

(4) Drawing number 96–SIDH3–006, titled, ''Upper and Middle Shoulder Foam,'' dated May 10, 1997.

(5) Drawing number SA–SIDH3–M001, titled, ''Complete Assembly SIDH3,'' dated April 19, 1997.

(6) Drawing number 78051–61X, Revision C, titled ''Head Assembly—complete,'' dated March 28, 1997 .

(7) Drawing number 78051–90, Revision A, titled ''Neck Assembly—complete,'' dated May 20, 1978.

(8) Dummy assembly drawing number SA–SID–M030, Revision A, titled ''Thorax Assembly—complete,'' dated May 18, 1994.

(9) Dummy assembly drawing SA–SID–M050, revision A, titled ''Lumbar Spine Assembly,'' dated May 18, 1994.

(10) Dummy assembly drawing SA–150 M060, revision A, titled ''Pelvis and Abdomen Assembly,'' dated May 18, 1994.

(11) Dummy assembly drawing SA–SID–053, revision A, titled ''Lumbar Spine Assembly,'' dated May 18, 1994.

(12) Dummy assembly drawing SA–SID–M080, titled ''Leg Assembly, Right,'' dated August 13, 1987.

(13) Dummy assembly drawing SA–SID–M081, titled ''Leg Assembly, Left,'' dated August 13, 1987.

(14) Drawing number 78051–383X, Revision P, titled ''Neck Transducer Structural Replacement,'' dated November 1, 1995.

(15) The Society of Automotive Engineers (SAE) J1733 Information Report, titled ''Sign Convention for Vehicle Crash Testing,'' dated December 1994.

(16) SAE Recommended Practice J211, ''Instrumentation for Impact Tests,'' Parts 1 and 2, dated March 1995.

(b) The incorporated materials are available as follows:

(1) The Director of the Federal Register approved those materials incorporated by reference in accordance with 5 U.S.C. 552(a) and 1 CFR part 51. Copies of the materials may be inspected at NHTSA's Docket Section, 400 Seventh Street S.W., room 5109, Washington, DC, or at the Office of the Federal Register, 800 North Capitol Street, N.W., Suite 700, Washington, DC.

(2) The parts lists, user's manual and drawings referred to in paragraphs (a)(1) through (a)(14) of this section are available from Reprographic Technologies, 9000 Virginia Manor Road, Beltsville, MD 20705 (301) 419–5070.

(3) The SAE materials referred to in paragraphs (a)(15) and (a)(16) of this section are available from the Society of Automotive Engineers, Inc., 400 Commonwealth Drive, Warrendale, PA 15096.

§572.111 General description.

(a) The dummy consists of component parts and component assemblies defined in drawing SA–SIDH3–M001, dated April 19, 1997, which are described in approximately 200 drawings and specifications that are set forth in §§572.32, 572.33 and 572.41(a)(3),(4),(5) and (6) of this part, and in the drawing of the Adaptor Bracket 96–SIDH3–001.

(1) The head assembly consists of the assembly specified in subpart E (§572.32) and conforms to each of the drawings subtended under drawing 78051–61X rev. C.

(2) The neck assembly consists of the assembly specified in subpart E (§572.33) and conforms to each of the drawings subtended under drawing 78051–90 rev. A.

(3) The thorax assembly consists of the assembly shown as number SID 053 and conforms to each applicable drawing subtended by number SA–SID M030 rev. A.

(4) The lumbar spine consists of the assembly specified in subpart B (§572.9(a)) and conforms to drawing SA 150 M050 and drawings subtended by SA–SID M050 rev. A.

(5) The abdomen and pelvis consist of the assembly and conform to the drawings subtended by SA 150 M060, the drawings subtended by SA 150 M060 rev. A and the drawings subtended by SA–SID–087 sheet 1 rev. H, and SA–SID–87 sheet 2 rev. H.

(6) The lower limbs consist of the assemblies specified in Subpart B (§ 572.10) shown as SA 150 M080 and SA 150 M081 in Figure 1 and SA–SID–M080 and SA–SID–M081 and conform to the drawings subtended by those numbers.

(7) The neck mounting adaptor bracket conforms to drawing 96–SIDH3–001.

(8) Upper and middle shoulder foams conform to drawing 96–SIDH3–006.

(b) The structural properties of the dummy are such that the dummy conforms to the specifications of this subpart in every respect before being used in vehicle tests specified in Standard 201.

(c) Disassembly, inspection and assembly procedures, external dimensions, weight and drawing list are set forth in the SIDH3 User's Manual, dated May 1997.

(d) Sign convention for signal outputs is given in the reference document SAE J1733 of 1994–12, ''Sign Convention for Vehicle Crash Testing.''

§ 572.112 Head assembly.

The head assembly consists of the head (drawing 78051–61X, rev. C) with the neck transducer structural replacement (drawing 78051–383X, rev. P) and three (3) accelerometers that are mounted in conformance to § 572.36 (c).

(a) Test procedure. (1) Soak the head assembly in a test environment at any temperature between 18.9 and 25.6 degrees C. (66 to 78 degrees F.) and at a relative humidity between 10 percent and 70 percent for a period of at least four (4) hours prior to its application in a test.

(2) Clean the impact surface of the head skin and impact plate surface, described in paragraph (a)(4) of this section, with 1,1,1 trichloroethane or equivalent prior to the test.

(3) Suspend the head, as shown in Figure 51, so that the midsagittal plane makes an angle of 35 ±1 degrees with the impact surface and its anterior-posterior axis is horizontal ±1 degree.

(4) Drop the head from a height of 200 ±0.25 mm (7.87 ±0.01 inches), measured from the lowest point on the head, by a means that ensures a smooth, clean release into a rigidly supported flat horizontal steel plate, which is 51 ±2 mm (2.0 ±0.01 in.) thick and 610 ±10 mm (24.0 ±0.4 in) square. The plate shall have a dry surface and shall have a microfinish of 0.2 microns (8 microinches) to 2.0 microns (80 microinches).

(5) Allow at least two (2) hours between successive tests on the same head.

(b) Performance criteria. (1) When the head assembly is dropped in accordance with § 572.112(a), the measured peak resultant acceleration shall be between 120 and 150 G's.

(2) The resultant acceleration-time curve shall be unimodal to the extent that oscillations occurring after the main acceleration pulse shall not exceed 15 percent (zero to peak) of the main pulse. The longitudinal acceleration vector shall not exceed 15 G's.

Figure 51

HEAD DROP TEST

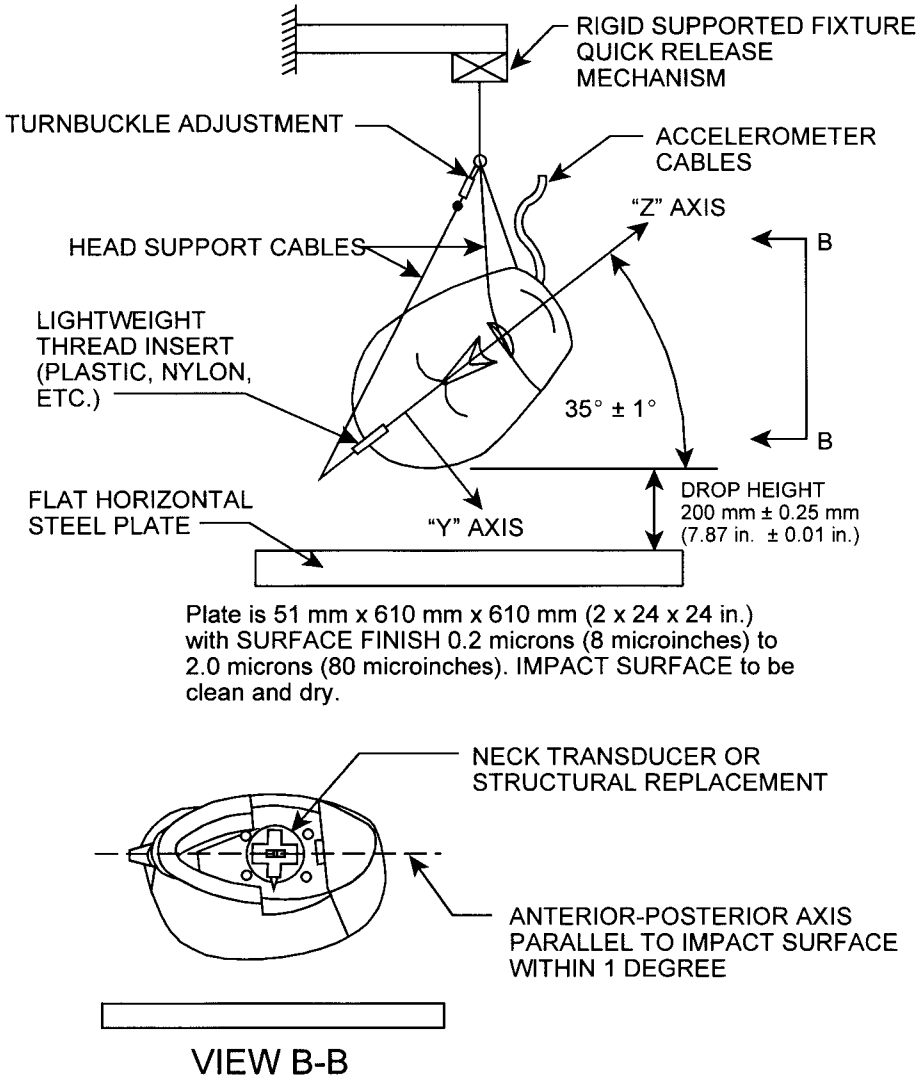

§572.113 Neck assembly.

The head/neck assembly consists of the parts 78051–61X, rev. C; –84; –90, rev. A; –94; –98; –104, revision F; –303, rev. E;—305; –306; –307, rev. X and has a six axis neck transducer (drawing C–1709, revision D) installed in conformance with §572.36(d).

(a) Test procedure. (1) Soak the head and neck assembly in a test environment at any temperature between 20.6 and 22.2 degrees C. (69 to 72 degrees F.) and at any relative humidity between 10 percent and 70 percent for a period of at least four (4) hours prior to its application in a test.

(2) Torque the jamnut (78051–64) on the neck cable (78051–301, rev. E) to 1.35 ±0.27 Nm (1.0 ±0.2 ft-lb) before each test.

(3) Using neck brackets 78051–303 and –307, mount the head/neck assembly to the part 572 pendulum test fixture (see § 572.33, Figure 22,) so that the midsagittal plane of the head is vertical and perpendicular to the plane of motion of the pendulum's longitudinal centerline (see § 572.33, Figure 20, except that the direction of the head/neck assembly is rotated around the superior-inferior axis by an angle of 90 degrees). Install suitable transducers or other devices necessary for measuring the ''D'' plane (horizontal surface at the base of the skull) rotation with respect to the pendulum's longitudinal centerline. The rotation can be measured by placing a transducer at the occipital condyles and another at the intersection of the centerline of the neck and the line extending from the base of the neck as shown in figure 52.

(4) Release the pendulum and allow it to fall freely from a height to achieve an impact velocity of 6.89 to 7.13 m/s (22.6 to 23.4 ft/sec) measured at the center of the pendulum accelerometer.

(5) Allow the neck to flex without the head or neck contacting any object during the test.

(6) Time zero is defined as the time of initial contact between the striker plate and the pendulum deceleration medium.

(7) Allow a period of at least thirty (30) minutes between successive tests on the same neck assembly.

(b) Performance criteria. (1) The pendulum deceleration pulse is to be characterized in terms of decrease in velocity as obtained by integrating the pendulum acceleration output.

Time (ms)	Pendulum Delta-V (m/s)
10	1.96 to 2.55.
20	4.12 to 5.10.
30	5.73 to 7.01.
40 to 70	6.27 to 7.64.

(2) The maximum rotation of the midsagittal plane of the head shall be 66 to 82 degrees with respect to the pendulum's longitudinal centerline. The decaying head rotation vs. time curve shall cross the zero angle between 58 to 67 ms after reaching its peak value.

(3) The moment about the x-axis which coincides with the midsagittal plane of the head at the level of the occipital condyles shall have a maximum value between 73 and 88 Nm. The decaying moment vs. time curve shall first cross zero moment between 49 and 64 ms after reaching its peak value. The following formula is to be used to calculate the moment about the occipital condyles when using the six-axis neck transducer:

$$M = Mx + 0.01778\ Fy$$

Where Mx and Fy are the moment and force measured by the transducer and expressed in terms of Nm and N, respectively.

(4) The maximum rotation of the head with respect to the pendulum's longitudinal centerline shall occur between 2 and 16 ms after peak moment.

[63 FR 41470, Aug. 4, 1998, as amended at 66 FR 51882, Oct. 11, 2001]

§ 572.114 Thorax.

The specifications and test procedure for the thorax for the SID/HIII dummy are identical to those applicable to the SID dummy as set forth in § 572.42 except that the reference to the SID device found in § 572.42(a), (SA–SID–M001A revision A, dated May 18, 1994) does not apply and the reference to the SID/HIII (SA–SIDH3–M001, dated April 19, 1997) is applied in its place.

Figure 52

NECK PENDULUM TEST

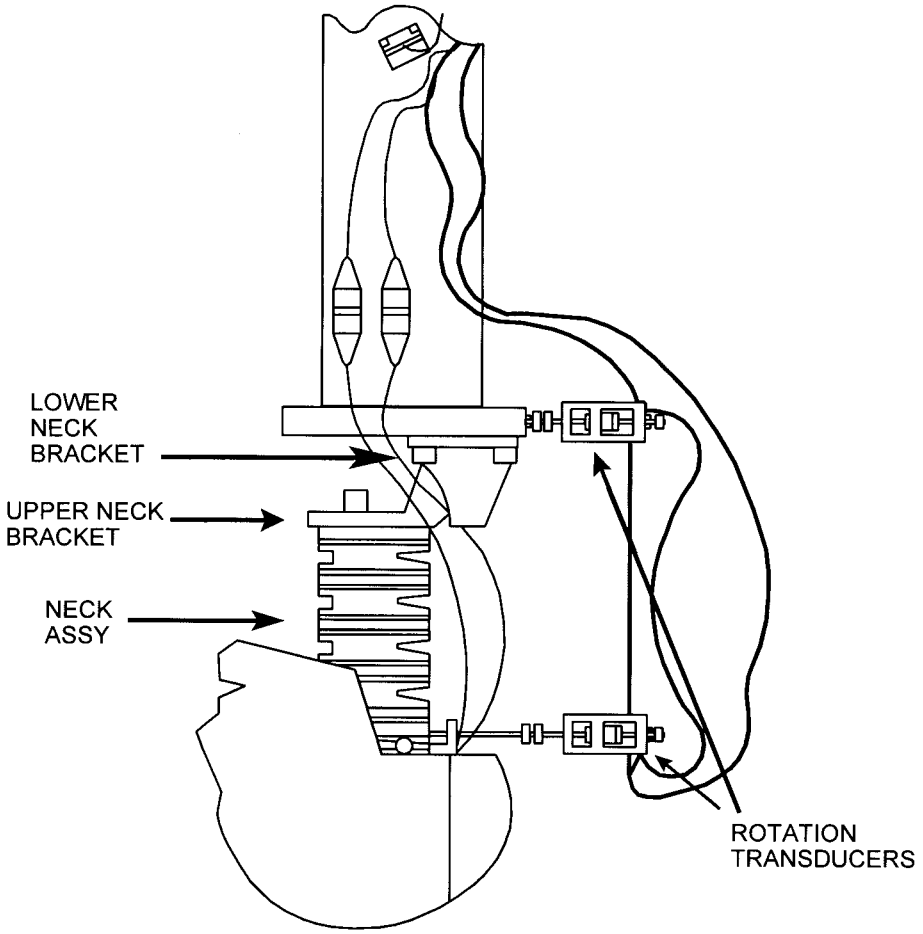

§572.115 Lumbar spine and pelvis.

The specifications and test procedure for the lumbar spine and pelvis are identical to those for the SID dummy as set forth in §572.42 except that the reference to the SID device found in §572.42(a), (SA–SID–M001A revision A, dated May 18, 1994) does not apply and the reference to the SID/HIII (SA–SIDH3–M001, dated April 19, 1997) is applied in its place.

§572.116 Instrumentation and test conditions.

(a) The test probe for lateral thoracic and pelvis impact tests are the same as those specified in §572.44(a).

(b) Accelerometer mounting in the thorax is the same as specified in § 572.44(b).

(c) Accelerometer mounting in the pelvis is the same as specified in § 572.44(c).

(d) Head accelerometer mounting is the same as specified in § 572.36(c).

(e) Neck transducer mounting is the same as specified in § 572.36(d).

(f) Instrumentation and sensors used must conform to SAE Recommended Practice J211, March 1995, ''Instrumentation for Impact Tests.''

(g) The mountings for the spine, rib and pelvis accelerometers shall have no resonance frequency within a range of 3 times the frequency range of the applicable channel class.

(h) Limb joints of the test dummy shall be set at the force between 1 to 2 g's, which just supports the limb's weight when the limbs are extended horizontally forward. The force required to move a limb segment does not exceed 2 g's throughout the range of the limb motion.

(i) Performance tests must be conducted at a temperature between 20.6 and 22.2 degrees C. (69 to 72 degrees F.) and at a relative humidity between 10 percent and 70 percent after exposure of the dummy to those conditions for a period of at least four (4) hours.

(j) For the performance of tests specified in § 572.114 and § 572.115, the dummy is positioned the same as specified in § 572.44(h).

Subpart N—Six-year-old Child Test Dummy, Beta Version

SOURCE: 65 FR 2065, Jan. 13, 2000, unless otherwise noted.

§ 572.120 Incorporation by reference.

(a) The following materials are hereby incorporated into this subpart by reference:

(1) A drawings and inspection package entitled ''Parts List and Drawings, Hybrid III Six-year-old Child Test Dummy (H-III6C, Beta Version) (June 2002)'', consisting of:

(i) Drawing No. 127–1000, 6-year H3 Head Complete,

(ii) Drawing No. 127–1015, Neck Assembly,

(iii) Drawing No. 127–2000, Upper Torso Assembly,

(iv) Drawing No. 127–3000, Lower Torso Assembly,

(v) Drawing No. 127–4000–1 and 4000–2, Leg Assembly,

(vi) Drawing No. 127–5000–1 and 5000–2, Arm Assembly, and

(vii) The Hybrid III Six-year-old Child Parts/Drawing List.

(2) A procedures manual entitled ''Procedures for Assembly, Disassembly, and Inspection (PADI) of the Hybrid III 6-year-old Child Crash Test Dummy (H-III6C), Beta Version, June 2002'';

(3) SAE Recommended Practice J211–1995 Instrumentation for Impact Tests—Parts 1 and 2, dated March, 1995'';

(4) SAE J1733 Information Report, titled ''Sign Convention for Vehicle Crash Testing'', dated December 1994.

(b) The Director of the Federal Register approved those materials incorporated by reference in accordance with 5 U.S.C. 552(a) and 1 CFR part 51. Copies of the materials may be inspected at NHTSA's Technical Reference Library, 400 Seventh Street SW., room 5109, Washington, DC, or at the Office of the Federal Register, 800 North Capitol Street, NW., Suite 700, Washington, DC.

(c) The incorporated materials are available as follows:

(1) The drawings and specifications package and the PADI document referred to in subparagraph (a) are accessible for viewing and copying at the Department of Transportation Docket's public area, Plaza 401, 400 Seventh St., SW., Washington, DC 20590, and may be downloaded from dms.dot.gov. They are also available from Reprographic Technologies, 9107 Gaither Rd, Gaithersburg, MD 200877, (301) 419–5070.

(2) The SAE materials referred to in paragraphs (a)(3) and (a)(4) of this section are available from the Society of Automotive Engineers, Inc., 400 Commonwealth Drive, Warrendale, PA 15096.

[65 FR 2065, Jan. 13, 2000, as amended at 67 FR 47327, July 18, 2002]

§ 572.121 General description.

(a) The Hybrid III type 6-year-old dummy is defined by drawings and specifications containing the following materials:

(1) Technical drawings and specifications package P/N 127–0000, the titles of which are listed in Table A;

(2) Procedures for Assembly, Disassembly, and Inspection (PADI) of the Hybrid III 6-year-old test dummy, Alpha version (August 1999).

TABLE A

Component assembly	Drawing number
Head assembly	127–1000
Neck assembly	127–1015
Upper torso assembly	127–2000
Lower torso assembly	127–3000
Leg assembly	127–4000
Arm assembly	127–5000

(b) Adjacent segments are joined in a manner such that except for contacts existing under static conditions, there is no contact between metallic elements throughout the range of motion or under simulated crash impact conditions.

(c) The structural properties of the dummy are such that the dummy must conform to this Subpart in every respect before use in any test similar to those specified in Standard 208, ''Occupant Crash Protection'', and Standard 213, ''Child Restraint Systems''.

§ 572.122 Head assembly and test procedure.

(a) The head assembly for this test consists of the complete head (drawing 127–1000), a six-axis neck transducer (drawing SA572–S11) or its structural replacement (drawing 78051–383X), a head to neck-to-pivot pin (drawing 78051–339), and 3 accelerometers (drawing SA572–S4).

(b) When the head assembly in paragraph (a) of this section is dropped from a height of 376.0 ± 1.0 mm (14.8 ± 0.04 in) in accordance with paragraph (c) of this section, the peak resultant acceleration at the location of the accelerometers at the head CG may not be less than 245 G or more than 300 G. The resultant acceleration vs. time history curve shall be unimodal; oscillations occurring after the main pulse must be less than 10 percent of the peak resultant acceleration. The lateral acceleration shall not exceed 15 g's (zero to peak).

(c) *Head test procedure*. The test procedure for the head is as follows:

(1) Soak the head assembly in a controlled environment at any temperature between 18.9 and 25.6 °C (66 and 78 °F) and a relative humidity from 10 to 70 percent for at least four hours prior to a test.

(2) Prior to the test, clean the impact surface of the skin and the impact plate surface with isopropyl alcohol, trichloroethane, or an equivalent. The skin of the head must be clean and dry for testing.

(3) Suspend the head assembly as shown in Figure N1. The lowest point on the forehead must be 376.0 ± 1.0 mm (14.8 ± 0.04 in) from the impact surface and the head must be oriented to an incline of 62 ± 1 deg. between the ''D'' plane as shown in Figure N1 and the plane of the impact surface. The 1.57 mm (0.062 in) diameter holes located on either side of the dummy's head shall be used to ensure that the head is level with respect to the impact surface.

(4) Drop the head assembly from the specified height by means that ensure a smooth, instant release onto a rigidly supported flat horizontal steel plate which is 50.8 mm (2 in) thick and 610 mm (24 in) square. The impact surface shall be clean, dry and have a micro finish of not less than 203.2. $\times 10^{-6}$ mm (8 micro inches) (RMS) and not more than 2032.0 $\times 10^{-6}$ mm (80 micro inches) (RMS).

(5) Allow at least 2 hours between successive tests on the same head.

§ 572.123 Neck assembly and test procedure.

(a) The neck assembly for the purposes of this test consists of the assembly of components shown in drawing 127–1015.

(b) When the head-neck assembly consisting of the head (drawing 127–1000), neck (drawing 127–1015), pivot pin (drawing 78051–339), bib simulator (drawing TE127–1025, neck bracket assembly (drawing 127–8221), six-axis neck transducer (drawing SA572–S11), neck mounting adaptor (drawing TE–2208–001), and three accelerometers (drawing

SA572–S4) installed in the head assembly as specified in § 572.122, is tested according to the test procedure in paragraph (c) of this section, it shall have the following characteristics:

(1) *Flexion*. (i) Plane D, referenced in Figure N2, shall rotate in the direction of preimpact flight with respect to the pendulum's longitudinal centerline between 74 degrees and 92 degrees. Within this specified rotation corridor, the peak moment about the occipital condyles shall be not less than 27 N-m (19.9 ft-lbf) and not more than 33 N-m (24.3 ft-lbf).

(ii) The positive moment shall decay for the first time to 5 N-m (3.7 ft-lbf) between 103 ms and 123 ms.

(iii) The moment shall be calculated by the following formula: Moment (N-m) = $M_y - (0.01778m) \times (F_X)$.

(iv) M_y is the moment about the y-axis and F_X is the shear force measured by the neck transducer (drawing SA572–S11) and 0.01778m is the distance from force to occipital condyle.

(2) *Extension*. (i) Plane D, referenced in Figure N3, shall rotate in the direction of preimpact flight with respect to the pendulum's longitudinal centerline between 85 degrees and 103 degrees. Within this specified rotation corridor, the peak moment about the occipital condyles shall be not more than −19 N-m (−14 ft-lbf) and not less than −24 N-m (−17.7ft-lbf).

(ii) The negative moment shall decay for the first time to −5 N-m (−3.7 ft-lbf) between 123 ms and 147 ms.

(iii) The moment shall be calculated by the following formula: Moment (N-m) = M_y—(0.01778m) x (F_X).

(iv) M_y is the moment about the y-axis and F_X is the shear force measured by the neck transducer (drawing SA572–S11) and 0.017778m is the distance from force to occipital condyle.

(3) Time-zero is defined as the time of initial contact between the pendulum striker plate and the honeycomb material.

(c) *Test procedure*. The test procedure for the neck assembly is as follows:

(1) Soak the neck assembly in a controlled environment at any temperature between 20.6 and 22.2 °C (69 and 72 °F) and a relative humidity between 10 and 70 percent for at least four hours prior to a test.

(2) Torque the jam nut (drawing 9000341) on the neck cable (drawing 127–1016) to 0.23 ± 0.02 N-m (2.0 ± 0.2 in-lbs).

(3) Mount the head-neck assembly, defined in paragraph (b) of this section, on the pendulum so the midsagittal plane of the head is vertical and coincides with the plane of motion of the pendulum as shown in Figure N2 for flexion tests and Figure N3 for extension tests.

(4) Release the pendulum and allow it to fall freely from a height to achieve an impact velocity of 4.95 ± 0.12 m/s (16.2 ± 0.4 ft/s) for flexion tests and 4.3 ± 0.12 m/s (14.10 ± 0.40 ft/s) for extension tests, measured by an accelerometer mounted on the pendulum as shown in Figure 22 of 49 CFR 572 at the instant of contact with the honey comb.

(i) Time-zero is defined as the time of initial contact between the pendulum striker plate and the honeycomb material. All data channels should be at the zero level at this time.

(ii) Stop the pendulum from the initial velocity with an acceleration vs. time pulse which meets the velocity change as specified below. Integrate the pendulum acceleration data channel to obtain the velocity vs. time curve:

TABLE B

Time	Pendulum pulse			
	Flexion		Extension	
ms	m/s	ft/s	m/s	ft/s
10	1.2–1.6	3.9–5.3	1.0–1.4	3.3–4.6
20	2.4–3.4	7.9–11.2	2.2–3.0	7.2–9.8
30	3.8–5.0	12.5–16.4	3.2–4.2	10.5–13.8

§ 572.124 Thorax assembly and test procedure.

(a) *Thorax (upper torso) assembly*. The thorax consists of the part of the torso assembly shown in drawing 127–2000.

(b) When the anterior surface of the thorax of a completely assembled dummy (drawing 127–0000) is impacted by a test probe conforming to section 572.127(a) at 6.71 ± 0.12 m/s (22.0 ± 0.4 ft/s) according to the test procedure in paragraph (c) of this section:

(1) The maximum sternum displacement (compression) relative to the spine, measured with chest deflection transducer (drawing SA572-S50), must be not less than 38.0 mm (1.50 in) and not more than 46.0 mm (1.80 in). Within this specified compression corridor, the peak force, measured by the probe in accordance with section 572.127, shall not be less than 1150 N (259 lbf) and not more than 1380 N (310 lbf). The peak force after 12.5 mm (0.5 in) of sternum displacement but before reaching the minimum required 38.0 mm (1.5 in) sternum displacement limit shall not exceed 1500 N (337.2 lbf).

(2) The internal hysteresis of the ribcage in each impact as determined by the plot of force vs. deflection in paragraph (b)(1) of this section shall be not less than 65 percent but not more than 85 percent.

(c) *Test procedure*. The test procedure for the thorax assembly is as follows:

(1) Soak the dummy in a controlled environment at any temperature between 20.6° and 22.2 °C (69° and 72 °F) and a relative humidity between 10 and 70 percent for at least four hours prior to a test.

(2) Seat and orient the dummy, wearing tight-fitting underwear or equivalent consisting of a size 5 short-sleeved shirt having a weight less than 0.090 kg (0.2 lb) and an opening at the top just large enough to permit the passage of the head with a tight fit, and a size 4 pair of long pants having a weight of less than 0.090 kg (0.2 lb) with the legs cut off sufficiently above the knee to allow the knee target to be visible, on a seating surface without back support as shown in Figure N4, with the limbs extended horizontally and forward, parallel to the midsagittal plane, the midsagittal plane vertical within ± 1 degree and the ribs level in the anterior-posterior and lateral directions within ± 0.5 degrees.

(3) Establish the impact point at the chest midsagittal plane so that the impact point of the longitudinal centerline of the probe coincides with the midsagittal plane of the dummy within ± 2.5 mm (0.1 in) and is 12.7 ± 1.1 mm (0.5 ± 0.04 in) below the horizontal-peripheral centerline of the No. 3 rib and is within 0.5 degrees of a horizontal line in the dummy's midsagittal plane.

(4) Impact the thorax with the test probe so that at the moment of contact the probe's longitudinal center line falls within 2 degrees of a horizontal line in the dummy's midsagittal plane.

(5) Guide the test probe during impact so that there is no significant lateral, vertical or rotational movement.

(6) No suspension hardware, suspension cables, or any other attachments to the probe, including the velocity vane, shall make contact with the dummy during the test.

[65 FR 2065, Jan. 13, 2000, as amended at 67 FR 47327, July 18, 2002]

§ 572.125 Upper and lower torso assemblies and torso flexion test procedure.

(a) *Upper/lower torso assembly*. The test objective is to determine the stiffness effects of the lumbar spine (drawing 127–3002), including cable (drawing 127–8095), mounting plate insert (drawing 910420–048), nylon shoulder bushing (drawing 9001373), nut (drawing 9001336), and abdominal insert (drawing 127–8210), on resistance to articulation between upper torso assembly (drawing 127–2000) and lower torso assembly (drawing 127–3000).

(b)(1) When the upper torso assembly of a seated dummy is subjected to a force continuously applied at the head to neck pivot pin level through a rigidly attached adaptor bracket as shown in Figure N5 according to the test procedure set out in paragraph (c) of this section, the lumbar spine-abdomen assembly shall flex by an amount that permits the upper torso assembly to translate in angular motion until the machined rear surface of the instrument cavity at the back of the thoracic spine box is at 45 ± 0.5 degrees relative to the vertical transverse plane, at which time the force applied as shown

in Figure N5 must be not less than 147 N (33 lbf) and not more than 200 N (45 lbf), and

(2) Upon removal of the force, the torso assembly must return to within 8 degrees of its initial position.

(c) *Test procedure*. The test procedure for the torso assemblies is as follows:

(1) Soak the dummy in a controlled environment at any temperature between 18.9 and 25.6 °C (66 and 78 °F) and a relative humidity between 10 and 70 percent for at least four hours prior to a test.

(2) Attach the dummy (with or without the legs below the femurs) to the fixture in a seated posture as shown in Figure N5.

(3) Secure the pelvis at the pelvis instrument cavity rear face by threading four ¼ in cap screws into the available threaded attachment holes. Tighten the mountings so that the test material is rigidly affixed to the test fixture and the pelvic-lumbar joining surface is horizontal.

(4) Flex the thorax forward three times between vertical and until the torso reference plane, as shown in figure N5, reaches 30 ± 2 degrees from vertical. Bring the torso to vertical orientation, remove all externally applied flexion forces, and wait 30 minutes before conducting the test. During the 30-minute waiting period, the dummy's upper torso shall be externally supported at or near its vertical orientation to prevent sagging.

(5) Remove the external support and wait two minutes. Measure the initial orientation of the torso reference plane of the seated, unsupported dummy as shown in Figure N5. This initial torso orientation angle may not exceed 22 degrees.

(6) Attach the loading adapter bracket to the spine of the dummy, the pull cable, and the load cell as shown in Figure N5.

(7) Apply a tension force in the midsagittal plane to the pull cable as shown in Figure N5 at any upper torso deflection rate between 0.5 and 1.5 degrees per second, until the torso reference plane is at 45 ± 0.5 degrees of flexion relative to the vertical transverse plane as shown in Figure N5.

(8) Continue to apply a force sufficient to maintain 45 ± 0.5 degrees of flexion for 10 seconds, and record the highest applied force during the 10-second period.

(9) Release all force as rapidly as possible, and measure the return angle at 3 minutes or any time thereafter after the release.

§ 572.126 Knees and knee impact test procedure.

(a) *Knee assembly*. The knee assembly is part of the leg assembly (drawing 127–4000–1 and –2).

(b) When the knee assembly, consisting of knee machined (drawing 127–4013), knee flesh (drawing 127–4011), lower leg (drawing 127–4014), the foot assembly (drawing 127–4030–1(left) and -2 (right)) and femur load transducer (drawing SA572-S10) or its structural replacement (drawing 127–4007) is tested according to the test procedure in section 572.127(c), the peak resistance force as measured with the test probe mounted accelerometer must be not less than 2.0 kN (450 lbf) and not more than 3.0 kN (674 lbf).

(c) *Test procedure*. The test procedure for the knee assembly is as follows:

(1) Soak the knee assembly in a controlled environment at any temperature between 18.9 and 25.6 °C (66 and 78 °F) and a relative humidity from 10 to 70 percent for at least four hours prior to a test.

(2) Mount the test material and secure it to a rigid test fixture as shown in Figure N6. No contact is permitted between any part of the foot or tibia and any exterior surface.

(3) Align the test probe so that throughout its stroke and at contact with the knee it is within 2 degrees of horizontal and collinear with the longitudinal centerline of the femur.

(4) Guide the pendulum so that there is no significant lateral vertical or rotational movement at time-zero.

(5) The test probe velocity at the time of contact shall be 2.1 ± 0.03 m/s (6.9 # 0.1 ft/s).

(6) No suspension hardware, suspension cables, or any other attachments to the probe, including the velocity vane, shall make contact with the dummy during testing.

[65 FR 2065, Jan. 13, 2000, as amended at 67 FR 47328, July 18, 2002]

§ 572.127 Test conditions and instrumentation.

(a) The test probe for thoracic impacts, except for attachments, shall be of rigid metal or metal alloy construction and concentric about its longitudinal axis. Any attachments to the impactor, such as suspension hardware, velocity vanes, etc., must meet the requirements of § 572.124(c)(6). The impactor shall have a mass of 2.86 ± 0.02 kg (6.3 ± 0.05 lb) and a minimum mass moment of inertia of 160 kg-c^2 (0.141 lb-in-sec^2) in yaw and pitch about the CG of the probe. One third of the weight of suspension cables and any attachments to the impact probe must be included in the calculation of mass, and such components may not exceed five percent of the total weight of the probe. The impacting end of the probe, has a flat, continuous, and non-deformable 101.6 ± 0.25 mm (4.00 ± 0.01 in) diameter face with an edge radius of 7.6/12.7 mm (0.3/0.5 in). The impactor shall have a 101–103 mm (4.0–4.1 in) diameter cylindrical surface extending for a minimum of 12.5 mm (0.5 in) to the rear from the impact face. The probe's end opposite to the impact face has provisions for mounting an accelerometer with its sensitive axis collinear with the longitudinal axis of the probe. The impact probe shall have a free air resonant frequency of not less than 1000 Hz limited to the direction of the longitudinal axis of the impactor.

(b) The test probe for knee impacts, except for attachments, shall be of rigid metal or alloy construction and concentric about its longitudinal axis. Any attachments to the impactor, such as suspension hardware, velocity vanes, etc., must meet the requirements of § 572.126(c)(6). The impactor shall have a mass of 0.82 ± 0.02 kg (1.8 ± 0.05 lb) and a minimum mass moment of inertia of 34 kg-cm2 (0.03 lb-in-sec2) in yaw and pitch about the CG of the probe. One third of the weight of suspension cables and any attachments to the impact probe must be included in the calculation of mass, and such components may not exceed five percent of the total weight of the probe. The impacting end of the probe, has a flat, continuous, and non-deformable 76.2 ± 0.2 mm (3.00 ± 0.01 in) diameter face with an edge radius of 7.6/12.7 mm (0.3/0.5 in). The impactor shall have a 76–77 mm (3.0–3.1 in) diameter cylindrical surface extending for a minimum of 12.5 mm (0.5 in) to the rear from the impact face. The probe's end opposite to the impact face has provisions for mounting an accelerometer with its sensitive axis collinear with the longitudinal axis of the probe. The impact probe shall have a free air resonant frequency of not less than 1000 Hz limited to the direction of the longitudinal axis of the impactor.

(c) Head accelerometers shall have dimensions, response characteristics, and sensitive mass locations specified in drawing SA572–S4 and be mounted in the head as shown in drawing 127–0000 sheet 3.

(d) *Neck force/moment transducer*. (1) The upper neck force/moment transducer shall have the dimensions, response characteristics, and sensitive axis locations specified in drawing SA572–S11 and be mounted in the head-neck assembly as shown in drawing 127–0000 sheet 3.

(2) The optional lower neck force/moment transducer shall have the dimensions, response characteristics, and sensitive axis locations specified in drawing SA572–S26 and be mounted as shown in drawing 127–0000 sheet 3.

(e) The thorax accelerometers shall have the dimensions, response characteristics, and sensitive mass locations specified in drawing SA572–S4 and be mounted in the torso assembly in triaxial configuration at T4, and as optional instrumentation in uniaxial for-and-aft oriented configuration on the most anterior ends of ribs #1 and #6 and at the spine box at the levels of #1 and #6 ribs as shown in 127–0000 sheet 3.

(f) The chest deflection transducer shall have the dimensions and response characteristics specified in drawing SA572–S50 and be mounted in the upper torso assembly as shown in 127–0000 sheet 3.

(g) The optional lumbar spine force-moment transducer shall have the dimensions, response characteristics, and sensitive axis locations specified in drawing SA572–S12 and be mounted in the lower torso assembly as shown in drawing 127–0000 sheet 3 as a replacement for lumbar adaptor 127–3005.

(h) The optional iliac spine force transducers shall have the dimensions and response characteristics specified in drawing SA572–S13 and be mounted in the torso assembly as shown in drawing 127–0000 sheet 3 as a replacement for ASIS load cell 127–3015–1 (left) and −2 (right).

(i) The optional pelvis accelerometers shall have the dimensions, response characteristics, and sensitive mass locations specified in drawing SA572–S4 and be mounted in the torso assembly in triaxial configuration in the pelvis bone as shown in drawing 127–0000 sheet 3.

(j) The femur force transducer shall have the dimensions and response characteristics specified in drawing SA72–S10 and be mounted in the leg assembly as shown in drawing 127–0000 sheet 3.

(k) The outputs of acceleration and force-sensing devices installed in the dummy and in the test apparatus specified by this part must be recorded in individual data channels that conform to SAE Recommended Practice J211, Rev. Mar95 ''Instrumentation for lmpact Tests,'' except that the lumbar measurements are based on CFC 600, with channel classes as follows:

(1) Head acceleration—Class 1000.

(2) Neck:

(i) Forces—Class 1000;

(ii) Moments—Class 600;

(iii) Pendulum acceleration—Class 180;

(iv) Rotation—Class 60 (if used).

(3) Thorax:

(i) Rib acceleration—Class 1000;

(ii) Spine and pendulum accelerations—Class 180;

(iii) Sternum deflection —Class 600.

(4) Lumbar:

(i) Forces—Class 1000;

(ii) Moments —Class 600;

(iii) Flexion —Class 60 if data channel is used.

(5) Pelvis accelerations —Class 1000.

(6) Femur forces—Class 600.

(l) Coordinate signs for instrumentation polarity shall conform to the Sign Convention For Vehicle Crash Testing, Surface Vehicle Information Report, SAE J1733, 1994–12.

(m) The mountings for sensing devices shall have no resonance frequency less than 3 times the frequency range of the applicable channel class.

(n) Limb joints must be set at one G, barely restraining the weight of the limb when it is extended horizontally. The force needed to move a limb segment shall not exceed 2G throughout the range of limb motion.

(o) Performance tests of the same component, segment, assembly, or fully assembled dummy shall be separated in time by period of not less than 30 minutes unless otherwise noted.

(p) Surfaces of dummy components may not be painted except as specified in this subpart or in drawings subtended by this subpart.

[65 FR 2065, Jan. 13, 2000, as amended at 67 FR 47328, July 18, 2002]

FIGURES TO SUBPART N

Figure N 1

HEAD DROP TEST SET-UP SPECIFICATIONS

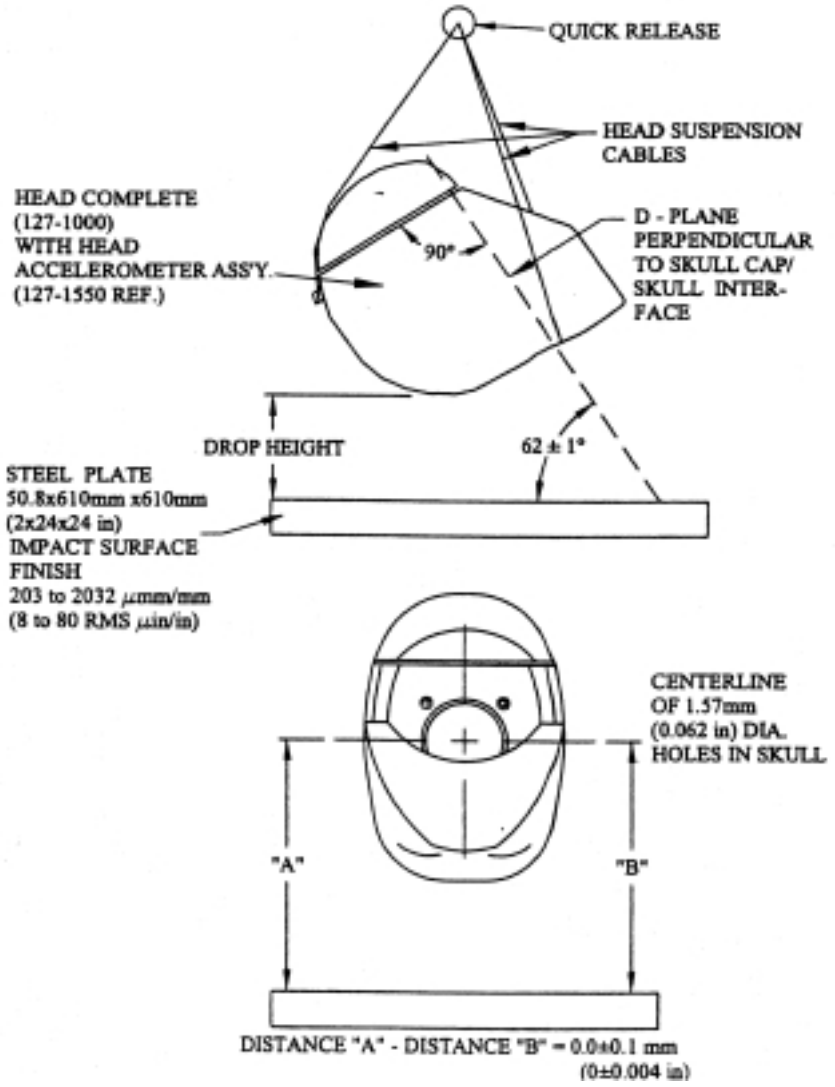

Figure N 2

NECK FLEXION TEST SET-UP SPECIFICATIONS

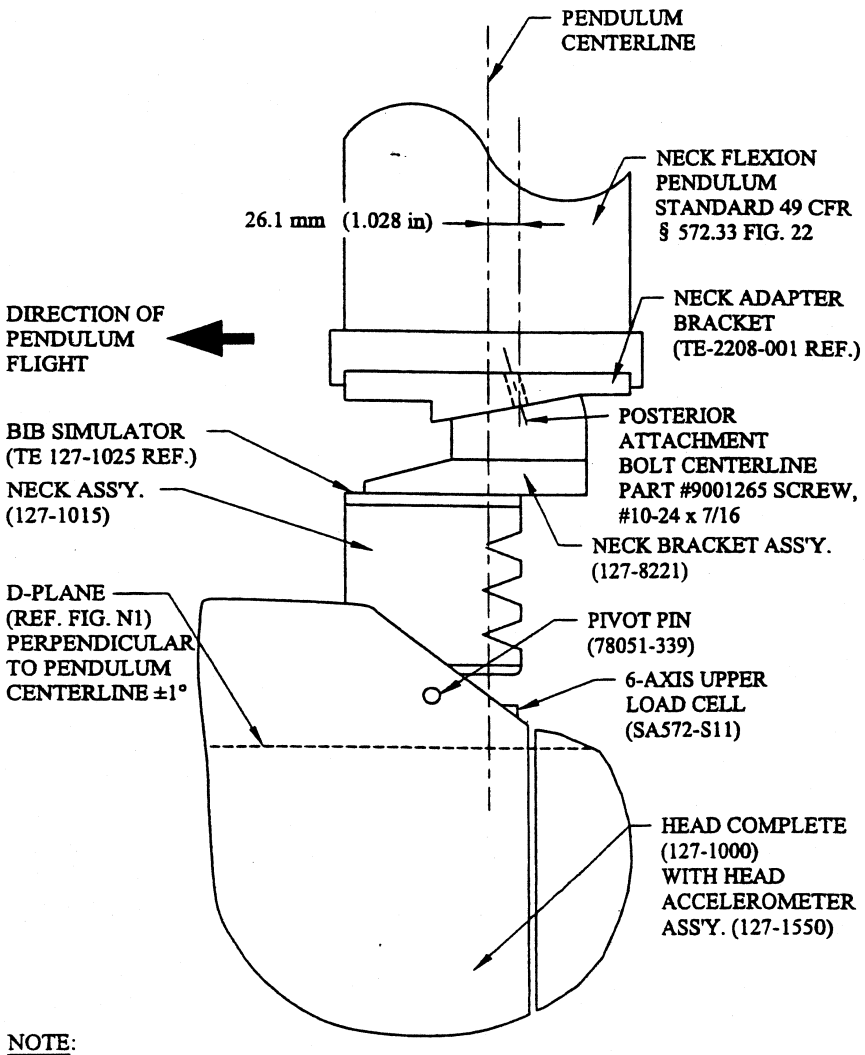

NOTE:
PENDULUM SHOWN IN VERTICAL ORIENTATION

Figure N 3

NECK EXTENSION TEST SET-UP SPECIFICATIONS

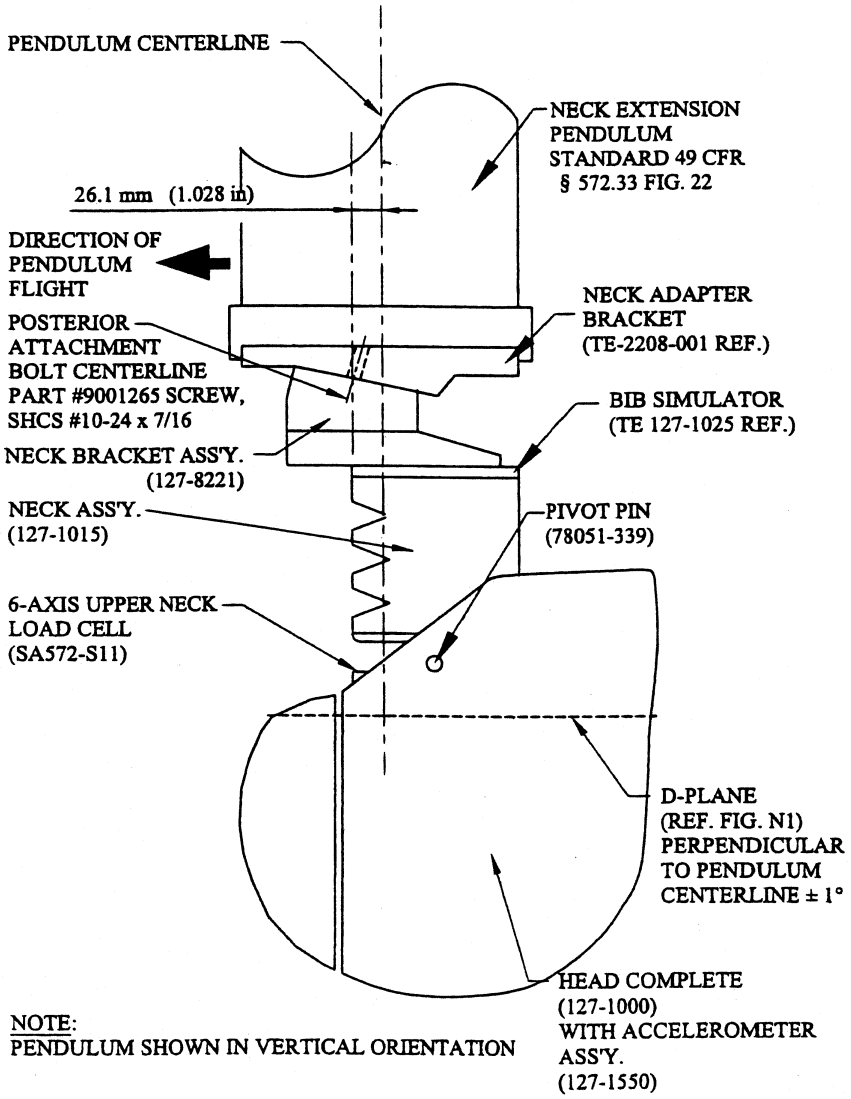

NOTE:
PENDULUM SHOWN IN VERTICAL ORIENTATION

FIGURE N 4

THORAX IMPACT TEST SET-UP SPECIFICATIONS

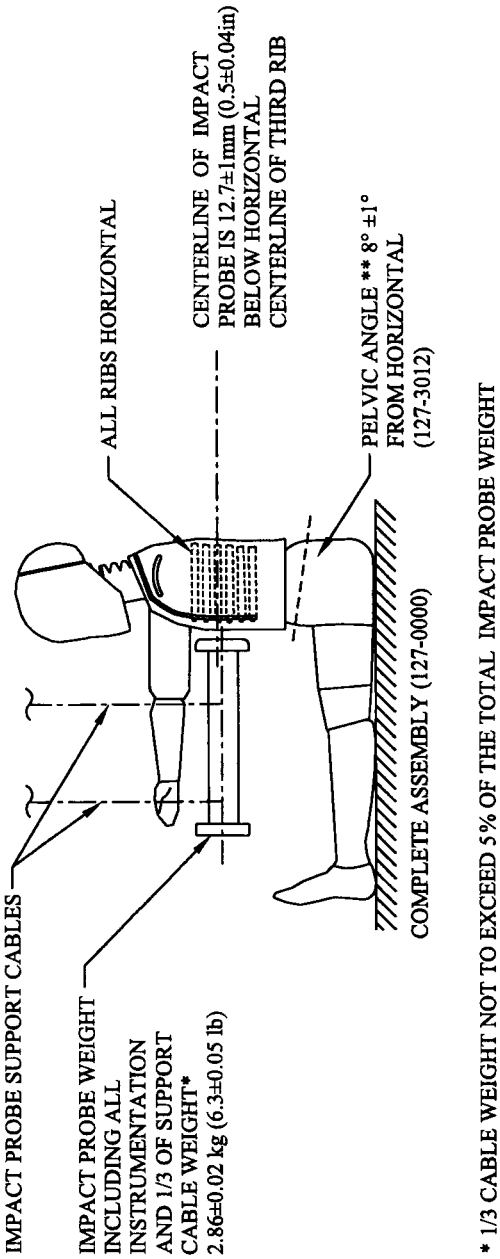

* 1/3 CABLE WEIGHT NOT TO EXCEED 5% OF THE TOTAL IMPACT PROBE WEIGHT

** PELVIS LUMBAR JOINING SURFACE

FIGURE N 5
TORSO FLEXION TEST SET-UP SPECIFICATIONS

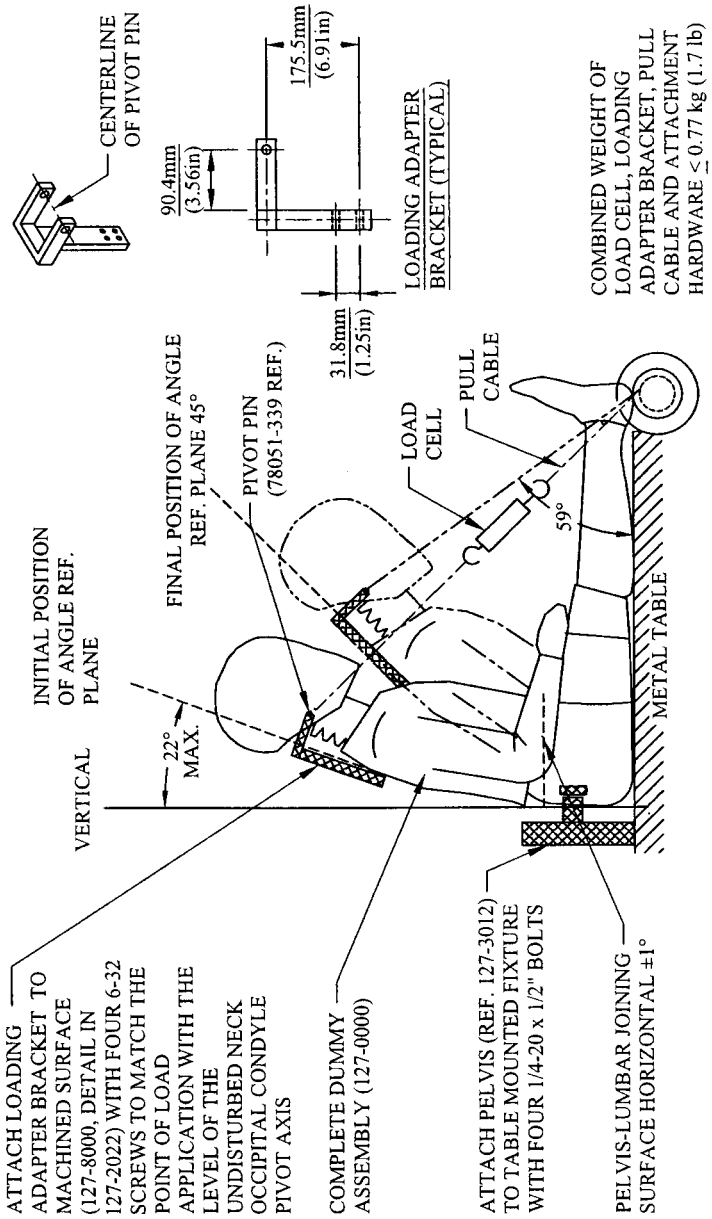

FIGURE N 6

KNEE IMPACT TEST SET-UP SPECIFICATIONS

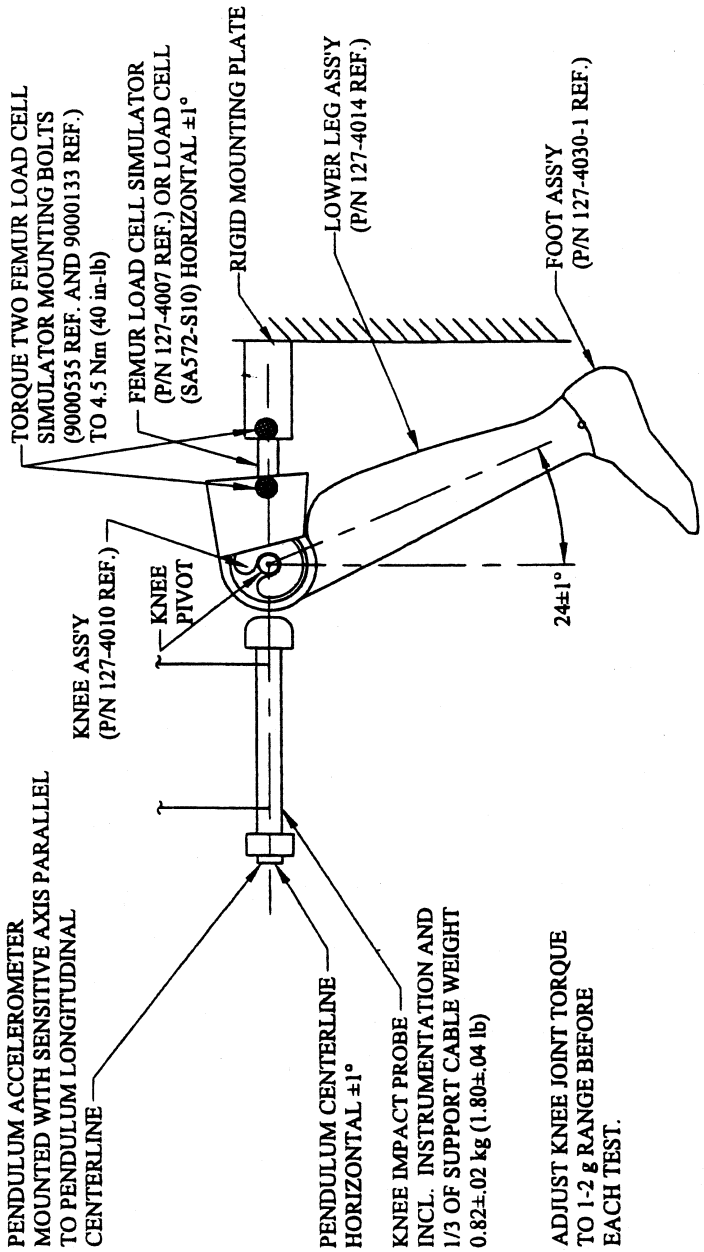

[65 FR 2065, Jan. 13, 2000, as amended at 67 FR 47329, July 18, 2002; 67 FR 59023, Sept. 19, 2002]

Subpart O—Hybrid III 5th Percentile Female Test Dummy, Alpha Version

SOURCE: 65 FR 10968, Mar. 1, 2000, unless otherwise noted.

§ 572.130 Incorporation by reference.

(a) The following materials are hereby incorporated into this Subpart by reference:

(1) A drawings and specification package entitled ''Parts List and Drawings, Part 572 Subpart O Hybrid III Fifth Percentile Small Adult Female Crash Test Dummy (HIII–5F, Alpha Version)'' (June 2002), incorporated by reference in ''572.131, and consisting of:

(i) Drawing No. 880105–100X, Head Assembly, incorporated by reference in §§ 572.131, 572.132, 572.133, 572.134, 572.135, and 572.137;

(ii) Drawing No. 880105–250, Neck Assembly, incorporated by reference in §§ 572.131, 572.133, 572.134, 572.135, and 572.137;

(iii) Drawing No. 880105–300, Upper Torso Assembly, incorporated by reference in §§ 572.131, 572.134, 572.135, and 572.137;

(iv) Drawing No. 880105–450, Lower Torso Assembly, incorporated by reference in §§ 572.131, 572.134, 572.135, and 572.137;

(v) Drawing No. 880105–560–1, Complete Leg Assembly—left, incorporated by reference in §§ 572.131, 572.135, 572.136, and 572.137;

(vi) Drawing No. 880105–560–2, Complete Leg Assembly—right incorporated by reference in §§ 572.131, 572.135, 572.136, and 572.137;

(vii) Drawing No. 880105–728–1, Complete Arm Assembly—left, incorporated by reference in §§ 572.131, 572.134, and 572.135 as part of the complete dummy assembly;

(viii) Drawing No. 880105–728–2, Complete Arm Assembly—right, incorporated by reference in §§ 572.131, 572.134, and 572.135 as part of the complete dummy assembly;

(ix) The Hybrid III 5th percentile small adult female crash test dummy parts list, incorporated by reference in § 572.131;

(2) A procedures manual entitled ''Procedures for Assembly, Disassembly, and Inspection (PADI) Subpart O Hybrid III Fifth Percentile Adult Female Crash Test Dummy (HIII–5F), Alpha Version'' (February 2002), incorporated by reference in § 572.132.

(3) SAE Recommended Practice J211/1, Rev. Mar 95 ''Instrumentation for Impact Tests—Part 1—Electronic Instrumentation'', incorporated by reference in § 572.137;

(4) SAE Recommended Practice J211/2, Rev. Mar 95 ''Instrumentation for Impact Tests—Part 2—Photographic Instrumentation'' incorporated by reference in § 572.137; and

(5) SAE J1733 of 1994–12 ''Sign Convention for Vehicle Crash Testing'', incorporated by reference in § 572.137.

(b) The Director of the Federal Register approved the materials incorporated by reference in accordance with 5 U.S.C. 552(a) and 1 CFR part 51. Copies of the materials may be inspected at NHTSA's Technical Reference Library, 400 Seventh Street SW., room 5109, Washington, DC, or at the Office of the Federal Register, 800 North Capitol Street, NW., Suite 700, Washington, DC.

(c) The incorporated materials are available as follows:

(1) The Parts List and Drawings, Part 572 Subpart O Hybrid III Fifth Percentile Small Adult Female Crash Test Dummy, (HIII–5F, Alpha Version) (June 2002), referred to in paragraph (a)(1) of this section and the Procedures for Assembly, Disassembly, and Inspection (PADI) of the Hybrid III 5th Percentile Small Adult Female Crash Test Dummy, Alpha Version, referred to in paragraph (a)(2) of this section are available from Reprographic Technologies, 9107 Gaither Road, Gaithersburg, MD 20877, (301) 419–5070. These documents are also accessible for reading and copying through the DOT Docket Management System.

(2) The SAE materials referred to in paragraphs (a)(3) and (a)(4) of this section are available from the Society of

Automotive Engineers, Inc., 400 Commonwealth Drive, Warrendale, Pa. 15096.

[65 FR 10968, Mar. 1, 2000, as amended at 67 FR 46413, July 15, 2002]

§ 572.131 General description.

(a) The Hybrid III fifth percentile adult female crash test dummy is defined by drawings and specifications containing the following materials:

(1) Technical drawings and specifications package P/N 880105–000 (refer to § 572.130(a)(1)), the titles of which are listed in Table A;

(2) Parts List and Drawings, Part 572 Subpart O Hybrid III Fifth Percentile Small Adult Female Crash Test Dummy (HIII–5F, Alpha Version) (June 2002) (refer to § 572.130(a)(1)(ix)).

TABLE A

Component assembly	Drawing No.
Head Assembly	880105–100X
Neck Assembly	880105–250
Upper Torso Assembly	880105–300
Lower Torso Assembly	880105–450
Complete Leg Assembly—left	880105–560–1
Complete Leg Assembly—right	880105–560–2
Complete Arm Assembly—left	880105–728–1
Complete Arm Assembly—right	880105–728–2

(b) Adjacent segments are joined in a manner such that, except for contacts existing under static conditions, there is no contact between metallic elements throughout the range of motion or under simulated crash impact conditions.

(c) The structural properties of the dummy are such that the dummy conforms to this Subpart in every respect before use in any test similar to those specified in Standard 208, Occupant Crash Protection.

[65 FR 10968, Mar. 1, 2000, as amended at 67 FR 46414, July 15, 2002]

§ 572.132 Head assembly and test procedure.

(a) The head assembly (refer to § 572.130(a)(1)(i)) for this test consists of the complete head (drawing 880105–100X), a six-axis neck transducer (drawing SA572–S11) or its structural replacement (drawing 78051–383X), and 3 accelerometers (drawing SA572–S4).

(b) When the head assembly is dropped from a height of 376.0±1.0 mm (14.8±0.04 in) in accordance with subsection (c) of this section, the peak resultant acceleration at the location of the accelerometers at the head CG may not be less than 250 G or more than 300 G. The resultant acceleration vs. time history curve shall be unimodal; oscillations occurring after the main pulse must be less than 10 percent of the peak resultant acceleration. The lateral acceleration shall not exceed 15 G (zero to peak).

(c) *Head test procedure*. The test procedure for the head is as follows:

(1) Soak the head assembly in a controlled environment at any temperature between 18.9 and 25.6 °C (66 and 78 °F) and a relative humidity from 10 to 70 percent for at least four hours prior to a test.

(2) Prior to the test, clean the impact surface of the skin and the impact plate surface with isopropyl alcohol, trichloroethane, or an equivalent. The skin of the head must be clean and dry for testing.

(3) Suspend and orient the head assembly as shown in Figure 19 of 49 CFR 572. The lowest point on the forehead must be 376.0±1.0 mm (14.8±0.04 in) from the impact surface. The 1.57 mm (0.062 in) diameter holes located on either side of the dummy's head shall be used to ensure that the head is level with respect to the impact surface.

(4) Drop the head assembly from the specified height by means that ensure a smooth, instant release onto a rigidly supported flat horizontal steel plate which is 50.8 mm (2.0 in) thick and 610 mm (24.0 in) square. The impact surface shall be clean, dry and have a micro finish of not less than $203.2.\times10^{-6}$ mm (8 micro inches) (RMS) and not more than 2032.0×10^{-6} mm (80 micro inches) (RMS).

(5) Allow at least 2 hours between successive tests on the same head.

§ 572.133 Neck assembly and test procedure.

(a) The neck assembly (refer to § 572.130(a)(1)(ii)) for the purposes of this test consists of the assembly of components shown in drawing 880105–250.

(b) When the head-neck assembly consisting of the head (drawing 880105–100X), neck (drawing 880105–250), bib

simulator (drawing 880105–371), upper neck adjusting bracket (drawing 880105–207), lower neck adjusting bracket (drawing 880105–208), six-axis neck transducer (drawing SA572–S11), and either three accelerometers (drawing SA572–S4) or their mass equivalent installed in the head assembly as specified in drawing 880105–100X, is tested according to the test procedure in subsection (c) of this section, it shall have the following characteristics:

(1) *Flexion*. (i) Plane D, referenced in Figure O1, shall rotate in the direction of preimpact flight with respect to the pendulum's longitudinal centerline between 77 degrees and 91 degrees. During the time interval while the rotation is within the specified corridor, the peak moment, measured by the neck transducer (drawing SA5572–311), about the occipital condyles may not be less than 69 N-m (51 ft-lbf) and not more than 83 N-m (61 ft-lbf). The positive moment shall decay for the first time to 10 N-m (7.4 ft-lbf) between 80 ms and 100 ms after time zero.

(ii) The moment shall be calculated by the following formula: Moment (N-m)= $M_y - (0.01778m) \times (F_x)$.

(iii) M_y is the moment about the y-axis, F_x is the shear force measured by the neck transducer (drawing SA572–S11), and 0.01778m is the distance from force to occipital condyle.

(2) *Extension*. (i) Plane D, referenced in Figure O2, shall rotate in the direction of preimpact flight with respect to the pendulum's longitudinal centerline between 99 degrees and 114 degrees. During the time interval while the rotation is within the specified corridor, the peak moment, measured by the neck transducer (drawing SA5572–S11), about the occipital condyles shall be not more than −53 N-m (−39 ft-lbf) and not less than −65 N-m (−48 ft-lbf). The negative moment shall decay for the first time to −10 N-m (−7.4 ft-lbf) between 94 ms and 114 ms after time zero.

(ii) The moment shall be calculated by the following formula: Moment (N-m) = $M_y - (0.01778m) \times (F_x)$.

(iii) M_y is the moment about the y-axis, F_x is the shear force measured by the neck transducer (drawing SA572–S11), and 0.01778 m is the distance from force to occipital condyle.

(3) Time-zero is defined as the time of initial contact between the pendulum striker plate and the honeycomb material. All data channels shall be at the zero level at this time.

(c) *Test Procedure*. The test procedure for the neck assembly is as follows:

(1) Soak the neck assembly in a controlled environment at any temperature between 20.6 and 22.2 °C (69 and 72 °F) and a relative humidity between 10 and 70 percent for at least four hours prior to a test.

(2) Torque the jam nut (drawing 9000018) on the neck cable (drawing 880105–206) to 1.4 ± 0.2 N-m (12.0 ± 2.0 in-lb).

(3) Mount the head-neck assembly, defined in subsection (b) of this section, on the pendulum described in Figure 22 of 49 CFR 572 so that the midsagittal plane of the head is vertical and coincides with the plane of motion of the pendulum as shown in Figure O1 for flexion tests and Figure O2 for extension tests.

(4)(i) Release the pendulum and allow it to fall freely from a height to achieve an impact velocity of 7.01 ± 0.12 m/s (23.0 ± 0.4 ft/s) for flexion tests and 6.07 ± 0.12 m/s (19.9 ± 0.40 ft/s) for extension tests, measured by an accelerometer mounted on the pendulum as shown in Figure 22 of 49 CFR 572 at the instant of contact with the honey comb.

(ii) Stop the pendulum from the initial velocity with an acceleration vs. time pulse which meets the velocity change as specified below. Integrate the pendulum acceleration data channel to obtain the velocity vs. time curve:

TABLE B.—PENDULUM PULSE

Time ms	Flexion		Extension	
	m/s	ft/s	m/s	ft/s
10	2.1–2.5	6.9–8.2	1.5–1.9	4.9–6.2
20	4.0–5.0	13.1–16.4	3.1–3.9	10.2–12.8
30	5.8–7.0	19.5–23.0	4.6–5.6	15.1–18.4

[65 FR 10968, Mar. 1, 2000, as amended at 67 FR 46414, July 15, 2002]

§ 572.134 Thorax assembly and test procedure.

(a) Thorax (Upper Torso) Assembly (refer to § 572.130(a)(1)(iii)). The thorax consists of the part of the torso assembly shown in drawing 880105–300.

(b) When the anterior surface of the thorax of a completely assembled dummy (drawing 880105–000) is impacted by a test probe conforming to section 572.137(a) at 6.71± 0.12 m/s (22.0 ± 0.4 ft/s) according to the test procedure in subsection (c) of this section:

(1) Maximum sternum displacement (compression) relative to the spine, measured with chest deflection transducer (drawing SA572–S5), must be not less than 50.0 mm (1.97 in) and not more than 58.0 mm (2.30 in). Within this specified compression corridor, the peak force, measured by the impact probe as defined in section 572.137 and calculated in accordance with paragraph (b)(3) of this section, shall not be less than 3900 N (876 lbf) and not more than 4400 N (989 lbf). The peak force after 18.0 mm (0.71 in) of sternum displacement but before reaching the minimum required 50.0 mm (1.97 in) sternum displacement limit shall not exceed 4600 N.

(2) The internal hysteresis of the ribcage in each impact as determined by the plot of force vs. deflection in paragraph (1) of this section shall be not less than 69 percent but not more than 85 percent. The hysteresis shall be calculated by determining the ratio of the area between the loading and unloading portions of the force deflection curve to the area under the loading portion of the curve.

(3) The force shall be calculated by the product of the impactor mass and its deceleration.

(c) *Test procedure*. The test procedure for the thorax assembly is as follows:

(1) The dummy is clothed in a form fitting cotton stretch above-the-elbow sleeved shirt and above-the-knee pants. The weight of the shirt and pants shall not exceed 0.14 kg (0.30 lb) each.

(2) Soak the dummy in a controlled environment at any temperature between 20.6 and 22.2 °C (69 and 72 °F) and a relative humidity between 10 and 70 percent for at least four hours prior to a test.

(3) Seat and orient the dummy on a seating surface without back support as shown in Figure O3, with the limbs extended horizontally and forward, parallel to the midsagittal plane, the midsagittal plane vertical within ±1 degree and the ribs level in the anterior-posterior and lateral directions within ±0.5 degrees.

(4) Establish the impact point at the chest midsagittal plane so that the impact point of the longitudinal centerline of the probe coincides with the midsagittal plane of the dummy within ±2.5 mm (0.1 in) and is 12.7 ±1.1 mm (0.5±0.04 in) below the horizontal-peripheral centerline of the No. 3 rib and is within 0.5 degrees of a horizontal line in the dummy's midsagittal plane.

(5) Impact the thorax with the test probe so that at the moment of contact the probe's longitudinal center line falls within 2 degrees of a horizontal line in the dummy's midsagittal plane.

(6) Guide the test probe during impact so that there is no significant lateral, vertical or rotational movement.

(7) No suspension hardware, suspension cables, or any other attachments to the probe, including the velocity vane, shall make contact with the dummy during the test.

[65 FR 10968, Mar. 1, 2000, as amended at 67 FR 46415, July 15, 2002]

§ 572.135 Upper and lower torso assemblies and torso flexion test procedure.

(a) *Upper/lower torso assembly*. The test objective is to determine the stiffness effects of the lumbar spine (drawing 880105–1096), and abdominal insert (drawing 880105–434), on resistance to articulation between the upper torso assembly (drawing 880105–300) and the lower torso assembly (drawing 880105–450) (refer to § 572.130(a)(1)(iv)).

(b)(1) When the upper torso assembly of a seated dummy is subjected to a force continuously applied at the head to neck pivot pin level through a rigidly attached adaptor bracket as shown in Figure O4 according to the test procedure set out in subsection (c) of this section, the lumbar spine-abdomen assembly shall flex by an amount that permits the upper torso assembly to

translate in angular motion relative to the vertical transverse plane 45 ± 0.5 degrees at which time the force applied must be not less than 320 N (71.5 lbf) and not more than 390 N (87.4 lbf), and

(2) Upon removal of the force, the torso assembly must return to within 8 degrees of its initial position.

(c) *Test procedure.* The test procedure for the upper/lower torso assembly is as follows:

(1) Soak the dummy in a controlled environment at any temperature between 18.9 and 25.6 °C (66 and 78 °F) and a relative humidity between 10 and 70 percent for at least four hours prior to a test.

(2) Assemble the complete dummy (with or without the legs below the femurs) and attach to the fixture in a seated posture as shown in Figure O4.

(3) Secure the pelvis to the fixture at the pelvis instrument cavity rear face by threading four ¼ inch cap screws into the available threaded attachment holes. Tighten the mountings so that the test material is rigidly affixed to the test fixture and the pelvic-lumbar joining surface is horizontal.

(4) Attach the loading adapter bracket to the spine of the dummy as shown in Figure O4.

(5) Inspect and adjust, if necessary, the seating of the abdominal insert within the pelvis cavity and with respect to the torso flesh, assuring that the torso flesh provides uniform fit and overlap with respect to the outside surface of the pelvis flesh.

(6) Flex the dummy's upper torso three times between the vertical and until the torso reference plane, as shown in Figure O4, reaches 30 degrees from the vertical transverse plane. Bring the torso to vertical orientation and wait for 30 minutes before conducting the test. During the 30 minute waiting period, the dummy's upper torso shall be externally supported at or near its vertical orientation to prevent it from drooping.

(7) Remove all external support and wait two minutes. Measure the initial orientation angle of the torso reference plane of the seated, unsupported dummy as shown in Figure O4. The initial orientation angle may not exceed 20 degrees.

(8) Attach the pull cable and the load cell as shown in Figure O4.

(9) Apply a tension force in the midsagittal plane to the pull cable as shown in Figure O4 at any upper torso deflection rate between 0.5 and 1.5 degrees per second, until the angle reference plane is at 45 ± 0.5 degrees of flexion relative to the vertical transverse plane.

(9) Continue to apply a force sufficient to maintain 45 ± 0.5 degrees of flexion for 10 seconds, and record the highest applied force during the 10-second period.

(10) Release all force at the attachment bracket as rapidly as possible, and measure the return angle with respect to the initial angle reference plane as defined in paragraph (6) 3 minutes after the release.

§ 572.136 Knees and knee impact test procedure.

(a) *Knee assembly.* The knee assembly (refer to §§ 572.130(a)(1)(v) and (vi)) for the purpose of this test is the part of the leg assembly shown in drawing 880105–560.

(b)(1) When the knee assembly, consisting of sliding knee assembly (drawing 880105–528R or –528L), lower leg structural replacement (drawing 880105–603), lower leg flesh (drawing 880105–601), ankle assembly (drawing 880105–660), foot assembly (drawing 880105–651 or 650), and femur load transducer (drawing SA572–S14) or its structural replacement (drawing 78051–319) is tested according to the test procedure in subsection (c), the peak resistance force as measured with the test probe-mounted accelerometer must be not less than 3450 N (776 lbf) and not more than 4060 N (913 lbf).

(2) The force shall be calculated by the product of the impactor mass and its deceleration.

(c) *Test procedure.* The test procedure for the knee assembly is as follows:

(1) Soak the knee assembly in a controlled environment at any temperature between 18.9 and 25.6 °C (66 and 78 °F) and a relative humidity from 10 to 70 percent for at least four hours prior to a test.

(2) Mount the test material and secure it to a rigid test fixture as shown

in Figure O5. No part of the foot or tibia may contact any exterior surface.

(3) Align the test probe so that throughout its stroke and at contact with the knee it is within 2 degrees of horizontal and collinear with the longitudinal centerline of the femur.

(4) Guide the pendulum so that there is no significant lateral vertical or rotational movement at the time of initial contact between the impactor and the knee.

(5) The test probe velocity at the time of contact shall be 2.1 ± 0.03 m/s (6.9 ± 0.1 ft/s).

(6) No suspension hardware, suspension cables, or any other attachments to the probe, including the velocity vane, shall make contact with the dummy during the test.

[65 FR 10968, Mar. 1, 2000, as amended at 67 FR 46415, July 15, 2002]

§ 572.137 Test conditions and instrumentation.

(a) The test probe for thoracic impacts, except for attachments, shall be of rigid metallic construction and concentric about its longitudinal axis. Any attachments to the impactor, such as suspension hardware, impact vanes, etc., must meet the requirements of § 572.134(c)(7). The impactor shall have a mass of 13.97 ± 0.23 kg (30.8 ± 0.05 lbs) and a minimum mass moment of inertia of 3646 kg-cm^2 (3.22 lbs-in-sec^2) in yaw and pitch about the CG of the probe. One-third (1/3) of the weight of suspension cables and any attachments to the impact probe must be included in the calculation of mass, and such components may not exceed five percent of the total weight of the test probe. The impacting end of the probe, perpendicular to and concentric with the longitudinal axis of the probe, has a flat, continuous, and non-deformable 152.4 ± 0.25 mm (6.00 ± 0.01 in) diameter face with a minimum/maximum edge radius of 7.6/12.7 mm (0.3/0.5 in). The impactor shall have a 152.4–152.6 mm (6.0–6.1 in) diameter cylindrical surface extending for a minimum of 25 mm (1.0 in) to the rear from the impact face. The probe's end opposite to the impact face has provisions for mounting of an accelerometer with its sensitive axis collinear with the longitudinal axis of the probe. The impact probe has a free air resonant frequency of not less than 1000 Hz, which may be determined using the procedure listed in Docket No. NHTSA–6714–14.

(b) The test probe for knee impacts, except for attachments, shall be of rigid metallic construction and concentric about its longitudinal axis. Any attachments to the impactor, such as suspension hardware, impact vanes, etc., must meet the requirements of § 572.136(c)(6). The impactor shall have a mass of 2.99 0.23 kg (6.6 ±0.05 lbs) and a minimum mass moment of inertia of 209 kg-cm^2 (0.177 lb-in-sec^2) in yaw and pitch about the CG of the probe. One-third (1/3) of the weight of suspension cables and any attachments to the impact probe may be included in the calculation of mass, and such components may not exceed five percent of the total weight of the test probe. The impacting end of the probe, perpendicular to and concentric with the longitudinal axis of the probe, has a flat, continuous, and non-deformable 76.2 ± 0.2 mm (3.00 ± 0.01 in) diameter face with a minimum/maximum edge radius of 7.6/12.7 mm (0.3/0.5 in). The impactor shall have a 76.2–76.4 mm (3.0–3.1 in) diameter cylindrical surface extending for a minimum of 12.5 mm (0.5 in) to the rear from the impact face. The probe's end opposite to the impact face has provisions for mounting an accelerometer with its sensitive axis collinear with the longitudinal axis of the probe. The impact probe has a free air resonant frequency of not less than 1000 Hz, which may be determined using the procedure listed in Docket No. NHTSA–6714–14.

(c) Head accelerometers shall have dimensions, response characteristics, and sensitive mass locations specified in drawing SA572–S4 and be mounted in the head as shown in drawing 880105–000 sheet 3 of 6.

(d) The upper neck force/moment transducer shall have the dimensions, response characteristics, and sensitive axis locations specified in drawing SA572–S11 and be mounted in the head neck assembly as shown in drawing 880105–000, sheet 3 of 6.

(e) The thorax accelerometers shall have the dimensions, response characteristics, and sensitive mass locations specified in drawing SA572–S4 and be

mounted in the torso assembly in triaxial configuration within the spine box instrumentation cavity and as optional instrumentation in uniaxial for-and-aft oriented configuration arranged as corresponding pairs in three locations on the sternum on and at the spine box of the upper torso assembly as shown in drawing 880105–000 sheet 3 of 6.

(f) The optional lumbar spine force-moment transducer shall have the dimensions, response characteristics, and sensitive axis locations specified in drawing SA572–S15 and be mounted in the lower torso assembly as shown in drawing 880105–450.

(g) The optional iliac spine force transducers shall have the dimensions and response characteristics specified in drawing SA572–S16 and be mounted in the torso assembly as shown in drawing 880105–450.

(h) The pelvis accelerometers shall have the dimensions, response characteristics, and sensitive mass locations specified in drawing SA572–S4 and be mounted in the torso assembly in triaxial configuration in the pelvis bone as shown in drawing 880105–000 sheet 3.

(i) The single axis femur force transducer (SA572–S14) or the optional multiple axis femur force/moment transducer (SA572–S29) shall have the dimensions, response characteristics, and sensitive axis locations specified in the appropriate drawing and be mounted in the femur assembly as shown in drawing 880105–500 sheet 3 of 6.

(j) The chest deflection transducer shall have the dimensions and response characteristics specified in drawing SA572–S51 and be mounted to the upper torso assembly as shown in drawings 880105–300 and 880105–000 sheet 3 of 6.

(k) The optional lower neck force/moment transducer shall have the dimensions, response characteristics, and sensitive axis locations specified in drawing SA572–S27 and be mounted to the upper torso assembly as shown in drawing 880105–000 sheet 3 of 6.

(l) The optional thoracic spine force/moment transducer shall have the dimensions, response characteristics, and sensitive axis locations specified in drawing SA572–S28 and be mounted in the upper torso assembly as shown in drawing 880105–000 sheet 3 of 6.

(m) The outputs of acceleration and force-sensing devices installed in the dummy and in the test apparatus specified by this part shall be recorded in individual data channels that conform to SAE Recommended Practice J211/10, Rev. Mar95 ''Instrumentation for Impact Impact Tests;—Part 1—Electronic Instrumentation,'' and SAE Recommended Practice J211/2, Rev Mar95 ''Instrumentation for Impact Tests—Part 2—Photographic Instrumentation'', (refer to §§ 572.130(a)(3) and (4) respectively) except as noted, with channel classes as follows:

(1) Head acceleration—Class 1000

(2) Neck:

(i) Forces—Class 1000

(ii) Moments—Class 600

(iii) Pendulum acceleration—Class 180

(iv) Rotation potentiometer—Class 60 (optional)

(3) Thorax:

(i) Rib acceleration—Class 1000

(ii) Spine and pendulum accelerations—Class 180

(iii) Sternum deflection—Class 600

(iv) Forces—Class 1000

(v) Moments—Class 600

(4) Lumbar:

(i) Forces—Class 1000

(ii) Moments—Class 600

(iii) Torso flexion pulling force—Class 60 if data channel is used

(5) Pelvis:

(i) Accelerations—Class 1000

(ii) Iliac wing forces—Class 180

(6) Femur forces and knee pendulum—Class 600

(n) Coordinate signs for instrumentation polarity shall conform to the Sign Convention For Vehicle Crash Testing, Surface Vehicle Information Report, SAE J1733, 1994–12 (refer to section 572.130(a)(4)).

(o) The mountings for sensing devices shall have no resonance frequency less than 3 times the frequency range of the applicable channel class.

(p) Limb joints must be set at one G, barely restraining the weight of the limb when it is extended horizontally. The force needed to move a limb segment shall not exceed 2G throughout the range of limb motion.

(q) Performance tests of the same component, segment, assembly, or

fully assembled dummy shall be separated in time by not less than 30 minutes unless otherwise noted.

(r) Surfaces of dummy components may not be painted except as specified in this subpart or in drawings subtended by this subpart.

[65 FR 10968, Mar. 1, 2000, as amended at 67 FR 46415, July 15, 2002]

FIGURES TO SUBPART O

FIGURE O1
NECK FLEXION TEST SETUP SPECIFICATIONS

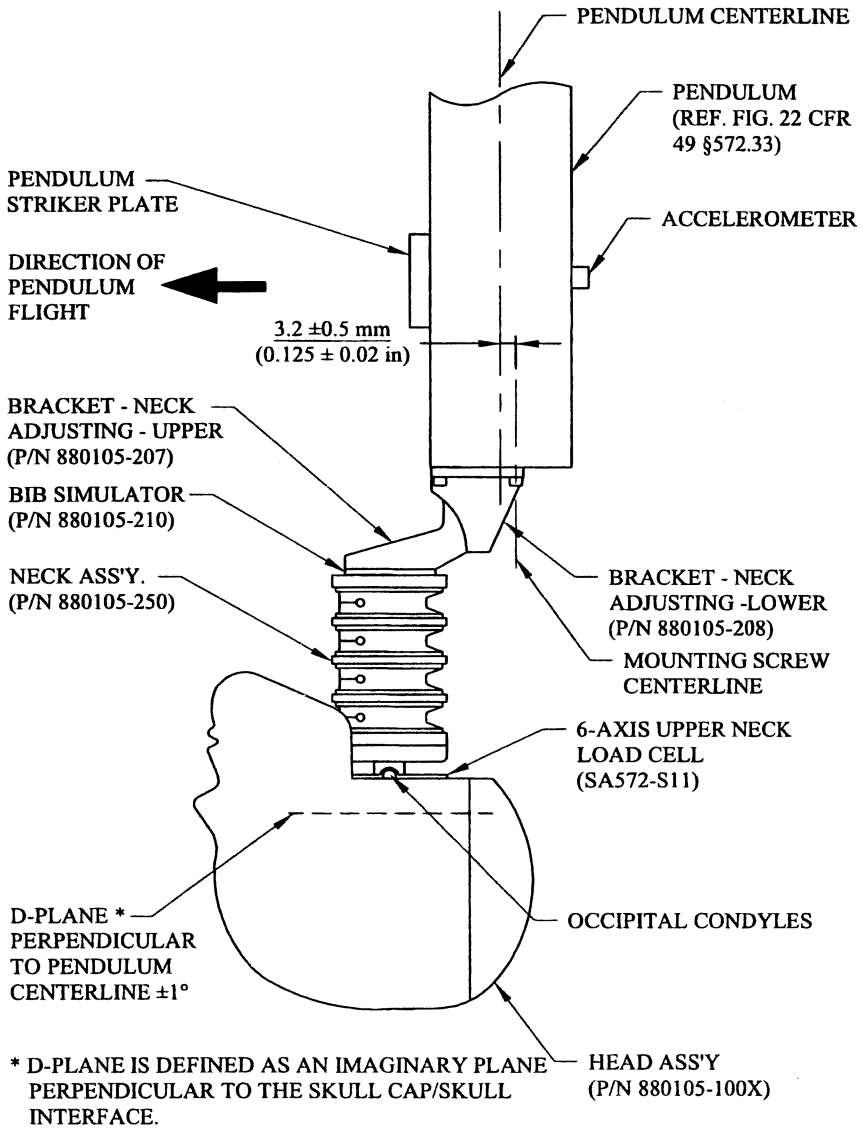

* D-PLANE IS DEFINED AS AN IMAGINARY PLANE PERPENDICULAR TO THE SKULL CAP/SKULL INTERFACE.

FIGURE O2
NECK EXTENSION TEST SETUP SPECIFICATIONS

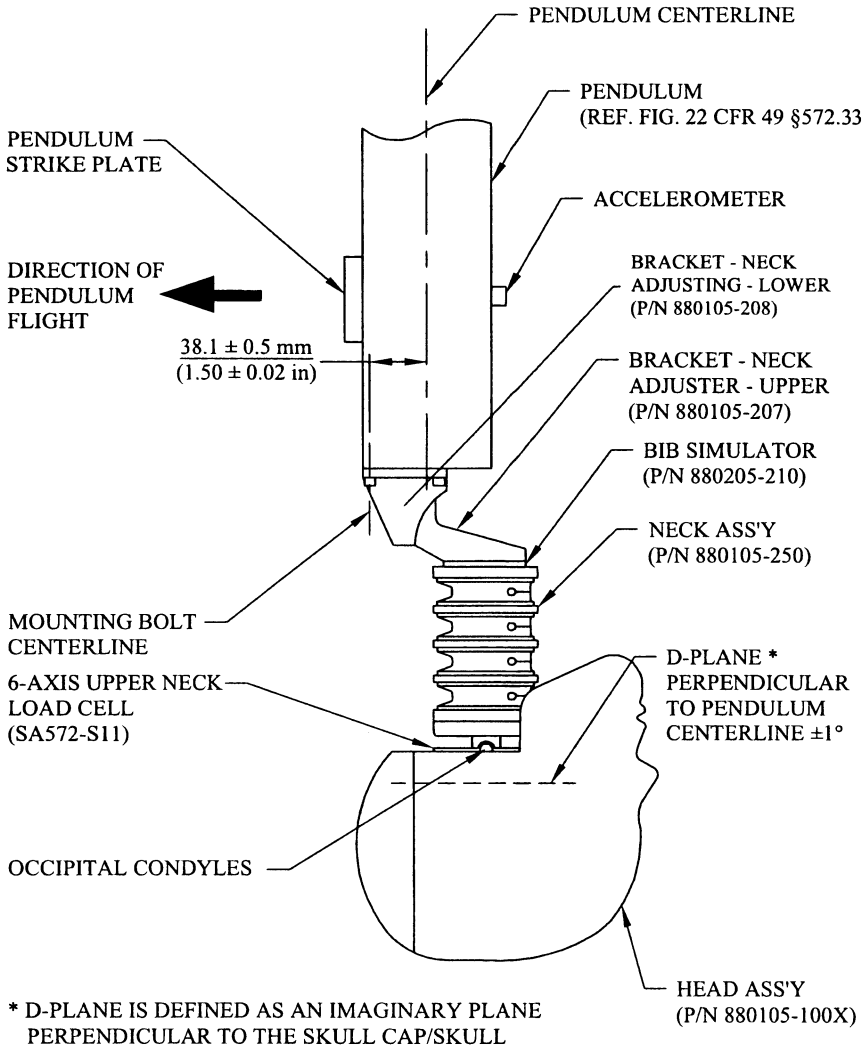

* D-PLANE IS DEFINED AS AN IMAGINARY PLANE PERPENDICULAR TO THE SKULL CAP/SKULL INTERFACE.

FIGURE 03
THORAX IMPACT TEST SETUP SPECIFICATIONS

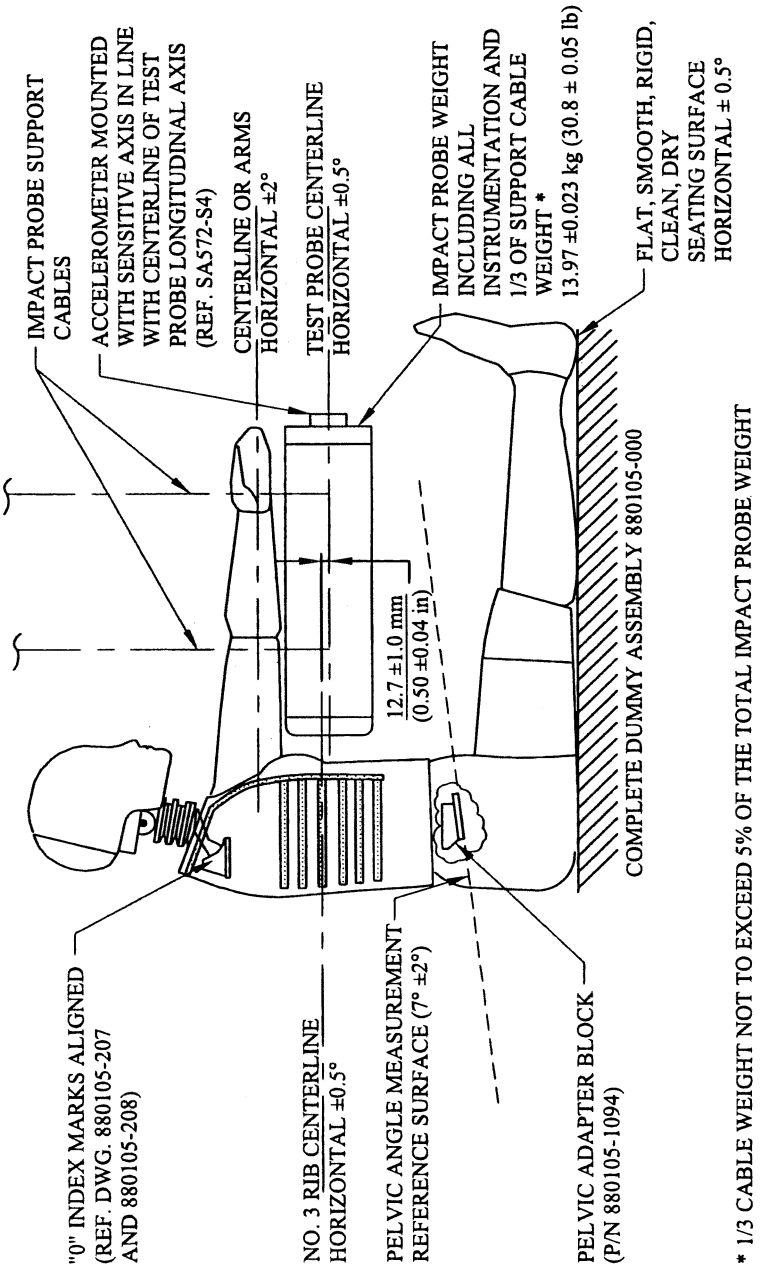

* 1/3 CABLE WEIGHT NOT TO EXCEED 5% OF THE TOTAL IMPACT PROBE WEIGHT

FIGURE O4
TORSO FLEXION TEST SET UP SPECIFICATIONS

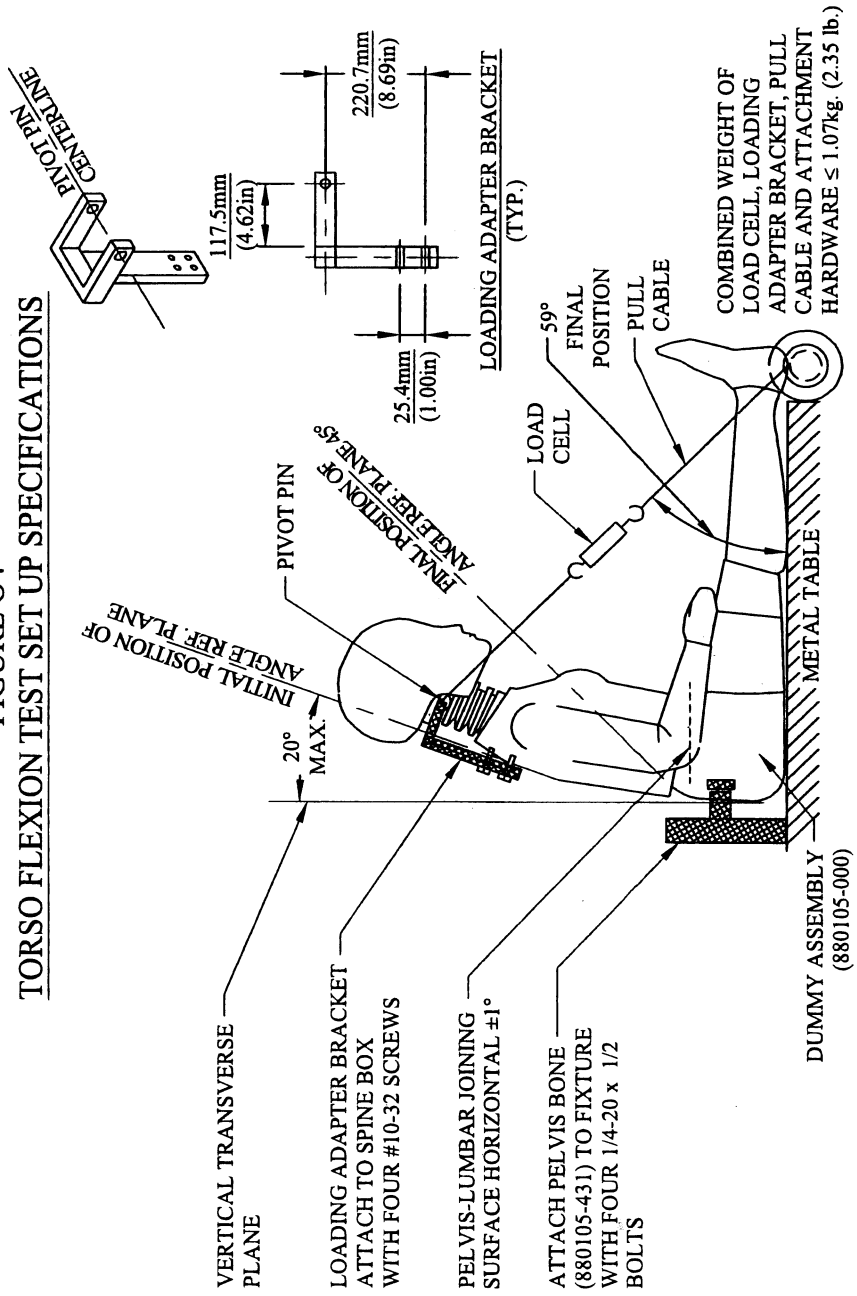

FIGURE O5
KNEE IMPACT TEST SETUP SPECIFICATIONS

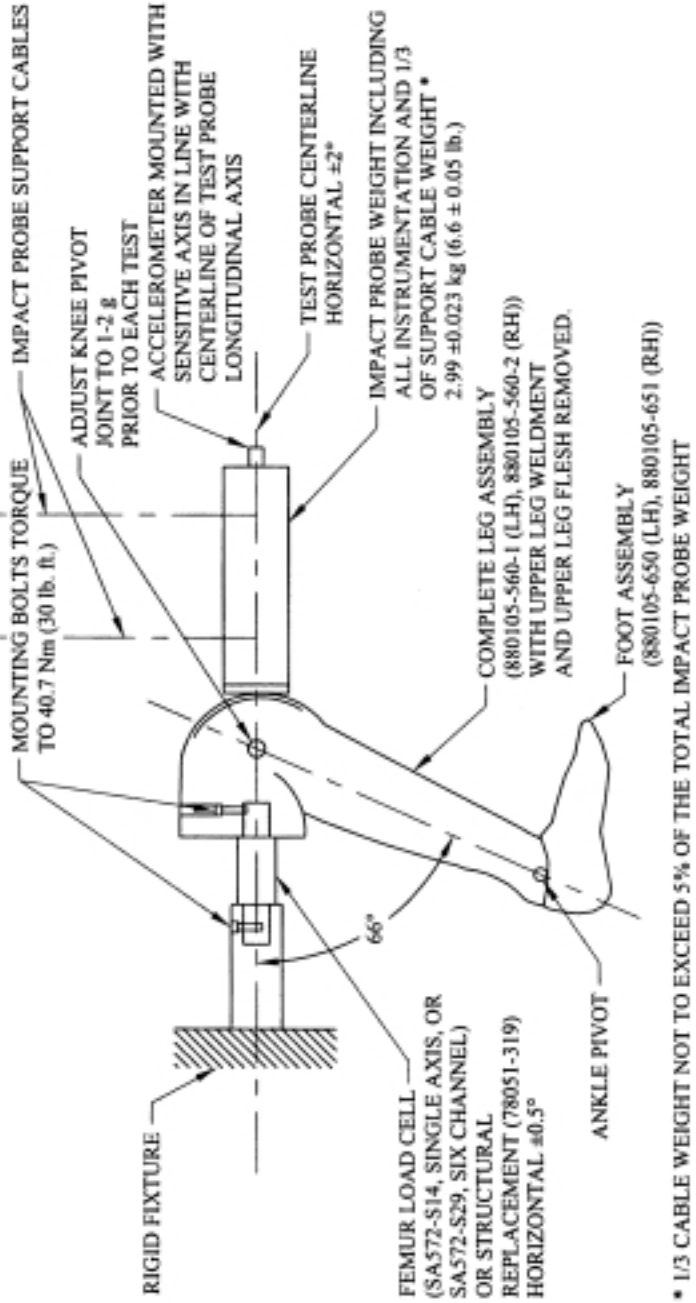

[65 FR 10968, Mar. 1, 2000, as amended at 67 FR 46415, July 15, 2002]

Subpart P—3-year-Old Child Crash Test Dummy, Alpha Version

SOURCE: 65 FR 15262, Mar. 22, 2000, unless otherwise noted.

§ 572.140 Incorporation by reference.

(a) The following materials are hereby incorporated in this subpart P by reference:

(1) A drawings and specifications package entitled, ''Parts List and Drawings, Subpart P Hybrid III 3-year-old child crash test dummy, (H–III3C, Alpha version) September 2001,'' incorporated by reference in § 572.141 and consisting of:

(i) Drawing No. 210–1000, Head Assembly, incorporated by reference in §§ 572.141, 572.142, 572.144, 572.145, and 572.146;

(ii) Drawing No. 210–2001, Neck Assembly, incorporated by reference in §§ 572.141, 572.143, 572.144, 572.145, and 572.146;

(iii) Drawing No. TE–208–000, Headform, incorporated by reference in §§ 572.141, and 572.143;

(iv) Drawing No. 210–3000, Upper/Lower Torso Assembly, incorporated by reference in §§ 572.141, 572.144, 572.145, and 572.146;

(v) Drawing No. 210–5000–1(L), –2(R), Leg Assembly, incorporated by reference in §§ 572.141, 572.144, 572.145 as part of a complete dummy assembly;

(vi) Drawing No. 210–6000–1(L), –2(R), Arm Assembly, incorporated by reference in §§ 572.141, 572.144, and 572.145 as part of the complete dummy assembly;

(2) A procedures manual entitled ''Procedures for Assembly, Disassembly and Inspection (PADI), Subpart P, Hybird III 3-year-old Child Crash Test Dummy, (H–III3C, Alpha Version) September 2001,'' incorporated by reference in § 572.141;

(3) SAE Recommended Practice J211/1, Rev. Mar 95 ''Instrumentation for Impact Tests—Part 1-Electronic Instrumentation'', incorporated by reference in § 572.146;

(4) SAE J1733 1994–12 ''Sign Convention for Vehicle Crash Testing'' incorporated by reference in § 572.146.

(5) The Director of the Federal Register approved those materials incorporated by reference in accordance with 5 U.S.C. 552(a) and 1 CFR Part 51. Copies of the materials may be inspected at NHTSA's Docket Section, 400 Seventh Street SW, room 5109, Washington, DC, or at the Office of the Federal Register, 800 North Capitol Street, NW, Suite 700, Washington, DC.

(b) The incorporated materials are available as follows:

(1) The drawings and specifications package referred to in paragraph (a)(1) of this section and the PADI document referred to in paragraph (a)(2) of this section are accessible for viewing and copying at the Department of Transportation's Docket public area, Plaza 401, 400 Seventh St., SW., Washington, DC 20590, and downloadable at *dms.dot.gov*. They are also available from Reprographic Technologies, 9107 Gaither Rd., Gaithersburg, MD 20877, (301) 419–5070.

(2) The SAE materials referred to in paragraphs (a)(3) and (a)(4) of this section are available from the Society of Automotive Engineers, Inc., 400 Commonwealth Drive, Warrendale, PA 15096.

[65 FR 15262, Mar. 22, 2000, as amended at 66 FR 64376, Dec. 13, 2001]

§ 572.141 General description.

(a) The Hybrid III 3-year-old child dummy is described by the following materials:

(1) Technical drawings and specifications package 210–0000 (refer to § 572.140(a)(1)), the titles of which are listed in Table A of this section;

(2) Procedures for Assembly, Disassembly and Inspection document (PADI) (refer to § 572.140(a)(2)).

(b) The dummy is made up of the component assemblies set out in the following Table A of this section:

TABLE A

Component assembly	Drawing No.
Head Assembly	210–1000
Neck Assembly (complete)	210–2001
Upper/Lower Torso Assembly	210–3000
Leg Assembly	210–5000–1(L), –2(R)
Arm Assembly	210–6000–1(L), –2(R)

(c) Adjacent segments are joined in a manner such that except for contacts existing under static conditions, there is no contact between metallic elements throughout the range of motion or under simulated crash impact conditions.

(d) The structural properties of the dummy are such that the dummy conforms to this part in every respect only before use in any test similar to those specified in Standard 208, *Occupant Crash Protection*, and Standard 213, *Child Restraint Systems*.

§ 572.142 Head assembly and test procedure.

(a) The head assembly (refer to § 572.140(a)(1)(i)) for this test consists of the head (drawing 210–1000), adapter plate (drawing ATD 6259), accelerometer mounting block (drawing SA 572–S80), structural replacement of ½ mass of the neck load transducer (drawing TE–107–001), head mounting washer (drawing ATD 6262), one ½–20x1″ flat head cap screw (FHCS) (drawing 9000150), and 3 accelerometers (drawing SA–572–S4).

(b) When the head assembly in paragraph (a) of this section is dropped from a height of 376.0+/−1.0 mm (14.8+/−0.04 in) in accordance with paragraph (c) of this section, the peak resultant acceleration at the location of the accelerometers at the head CG shall not be less than 250 g or more than 280 g. The resultant acceleration versus time history curve shall be unimodal, and the oscillations occurring after the main pulse shall be less than 10 percent of the peak resultant acceleration. The lateral acceleration shall not exceed +/−15 G (zero to peak).

(c) *Head test procedure*. The test procedure for the head is as follows:

(1) Soak the head assembly in a controlled environment at any temperature between 18.9 and 25.6 °C (66 and 78 °F) and at any relative humidity between 10 and 70 percent for at least four hours prior to a test.

(2) Prior to the test, clean the impact surface of the head skin and the steel impact plate surface with isopropyl alcohol, trichlorethane, or an equivalent. Both impact surfaces must be clean and dry for testing.

(3) Suspend the head assembly with its midsagittal plane in vertical orientation as shown in Figure P1 of this subpart. The lowest point on the forehead is 376.0±1.0 mm (14.76±0.04 in) from the steel impact surface. The 3.3 mm (0.13 in) diameter holes, located on either side of the dummy's head in transverse alignment with the CG, shall be used to ensure that the head transverse plane is level with respect to the impact surface.

(4) Drop the head assembly from the specified height by a means that ensures a smooth, instant release onto a rigidly supported flat horizontal steel plate which is 50.8 mm (2 in) thick and 610 mm (24 in) square. The impact surface shall be clean, dry and have a finish of not less than 203.2×10^{-6} mm (8 micro inches) (RMS) and not more than 2032.0×10^{-6} mm (80 micro inches) (RMS).

(5) Allow at least 2 hours between successive tests on the same head.

§ 572.143 Neck-headform assembly and test procedure.

(a) The neck and headform assembly (refer to §§ 572.140(a)(1)(ii) and 572.140(a)(1)(iii)) for the purposes of this test, as shown in Figures P2 and P3 of this subpart, consists of the neck molded assembly (drawing 210–2015), neck cable (drawing 210–2040), nylon shoulder bushing (drawing 9001373), upper mount plate insert (drawing 910420–048), bib simulator (drawing TE–208–050), urethane washer (drawing 210–2050), neck mounting plate (drawing TE–250–021), two jam nuts (drawing 9001336), load-moment transducer (drawing SA 572–S19), and headform (drawing TE–208–000).

(b) When the neck and headform assembly, as defined in § 572.143(a), is tested according to the test procedure in paragraph (c) of this section, it shall have the following characteristics:

(1) Flexion.

(i) Plane D, referenced in Figure P2 of this subpart, shall rotate in the direction of preimpact flight with respect to the pendulum's longitudinal centerline between 70 degrees and 82 degrees. Within this specified rotation corridor, the peak moment about the occipital condyle may not be less than 42 N-m and not more than 53 N-m.

(ii) The positive moment shall decay for the first time to 10 N-m between 60 ms and 80 ms after time zero.

(iii) The moment and rotation data channels are defined to be zero when the longitudinal centerline of the neck and pendulum are parallel.

(2) Extension.

(i) Plane D referenced in Figure P3 of this subpart shall rotate in the direction of preimpact flight with respect to the pendulum's longitudinal centerline between 83 degrees and 93 degrees. Within this specified rotation corridor, the peak moment about the occipital condyle may be not more than −43.7 N-m and not less than −53.3 N-m.

(ii) The negative moment shall decay for the first time to −10 N-m between 60 and 80 ms after time zero.

(iii) The moment and rotation data channels are defined to be zero when the longitudinal centerline of the neck and pendulum are parallel.

(c) *Test procedure.* (1) Soak the neck assembly in a controlled environment at any temperature between 20.6 and 22.2 °C (69 and 72 F) and a relative humidity between 10 and 70 percent for at least four hours prior to a test.

(2) Torque the jam nut (drawing 9001336) on the neck cable (drawing 210–2040) between 0.2 N-m and 0.3 N-m.

(3) Mount the neck-headform assembly, defined in paragraph (a) of this section, on the pendulum so the midsagittal plane of the headform is vertical and coincides with the plane of motion of the pendulum as shown in Figure P2 of this subpart for flexion and Figure P3 of this subpart for extension tests.

(4) Release the pendulum and allow it to fall freely to achieve an impact velocity of 5.50±0.10 m/s (18.05 + 0.40 ft/s) for flexion and 3.65±0.1 m/s (11.98±0.40 ft/s) for extension tests, measured by an accelerometer mounted on the pendulum as shown in Figure 22 of this part 572 at time zero.

(i) The test shall be conducted without inducing any torsion twisting of the neck.

(ii) Stop the pendulum from the initial velocity with an acceleration vs. time pulse which meets the velocity change as specified in Table B of this section. Integrate the pendulum acceleration data channel to obtain the velocity vs. time curve as indicated in Table B of this section.

(iii) Time-zero is defined as the time of initial contact between the pendulum striker plate and the honeycomb material. The pendulum data channel shall be zero at this time.

TABLE B.—PENDULUM PULSE

Time	Flexion		Time	Extension	
ms	m/s	ft/s	ms	m/s	ft/s
10	2.0–2.7	6.6–8.9	6	1.0–1.4	3.3–4.6
15	3.0–4.0	9.8–13.1	10	1.9–2.5	6.2–8.2
20	4.0–5.1	13.1–16.7	14	2.8–3.5	9.2–11.5

§ 572.144 Thorax assembly and test procedure.

(a) *Thorax (upper torso) assembly (refer to § 572.140(a)(1)(iv)).* The thorax consists of the upper part of the torso assembly shown in drawing 210–3000.

(b) When the anterior surface of the thorax of a completely assembled dummy (drawing 210–0000) is impacted by a test probe conforming to § 572.146(a) at 6.0±0.1 m/s (19.7±0.3 ft/s) according to the test procedure in paragraph (c) of this section.

(1) Maximum sternum displacement (compression) relative to the spine, measured with the chest deflection transducer (SA–572–S50), must not be less than 32mm (1.3 in) and not more than 38mm (1.5 in). Within this specified compression corridor, the peak force, measured by the probe-mounted accelerometer as defined in § 572.146(a) and calculated in accordance with paragraph (b)(3) of this section, shall be not less than 680 N and not more than 810 N. The peak force after 12.5 mm of sternum compression but before reaching the minimum required 32.0 mm sternum compression shall not exceed 910 N.

(2) The internal hysteresis of the ribcage in each impact, as determined from the force vs. deflection curve, shall be not less than 65 percent and not more than 85 percent. The hysteresis shall be calculated by determining the ratio of the area between the loading and unloading portions of the force deflection curve to the area under the loading portion of the curve.

(3) The force shall be calculated by the product of the impactor mass and its deceleration.

(c) *Test procedure*. The test procedure for the thorax assembly is as follows:

(1) The test dummy is clothed in cotton-polyester-based tight-fitting shirt with long sleeves and ankle-length pants whose combined weight is not more than 0.25 kg (0.55 lbs).

(2) Soak the dummy in a controlled environment at any temperature between 20.6 and 22.2 °C (69 and 72 °F) and at any relative humidity between 10 and 70 percent for at least four hours prior to a test.

(3) Seat and orient the dummy on a seating surface without back support as shown in Figure P4, with the lower limbs extended horizontally and forward, the upper arms parallel to the torso and the lower arms extended horizontally and forward, parallel to the midsagittal plane, the midsagittal plane being vertical within ±1 degree and the ribs level in the anterior-posterior and lateral directions within ±0.5 degrees.

(4) Establish the impact point at the chest midsagittal plane so that the impact point of the longitudinal centerline of the probe coincides with the dummy's mid-sagittal plane and is centered on the center of No. 2 rib within ±2.5 mm (0.1 in.) and 0.5 degrees of a horizontal plane.

(5) Impact the thorax with the test probe so that at the moment of contact the probe's longitudinal center line is within 2 degrees of a horizontal line in the dummy's midsagittal plane.

(6) Guide the test probe during impact so that there is no significant lateral, vertical or rotational movement.

(7) No suspension hardware, suspension cables, or any other attachments to the probe, including the velocity vane, shall make contact with the dummy during the test.

[65 FR 15262, Mar. 22, 2000, as amended at 66 FR 64376, Dec. 13, 2001]

§ 572.145 Upper and lower torso assemblies and torso flexion test procedure.

(a) The test objective is to determine the resistance of the lumbar spine and abdomen of a fully assembled dummy (drawing 210–0000) to flexion articulation between upper and lower halves of the torso assembly (refer to § 572.140(a)(1)(iv)).

(b)(1) When the upper half of the torso assembly of a seated dummy is subjected to a force continuously applied at the occipital condyle level through the rigidly attached adaptor bracket in accordance with the test procedure set out in paragraph (c) of this section, the lumbar spine-abdomen assembly shall flex by an amount that permits the upper half of the torso, as measured at the posterior surface of the torso reference plane shown in Figure P5 of this subpart, to translate in angular motion in the midsagittal plane 45±0.5 degrees relative to the vertical transverse plane, at which time the pulling force applied must not be less than 130 N (28.8 lbf) and not more than 180 N (41.2 lbf), and

(2) Upon removal of the force, the upper torso assembly returns to within 10 degrees of its initial position.

(c) *Test procedure*. The test procedure is as follows:

(1) Soak the dummy in a controlled environment at any temperature between 18.9° and 25.6 °C (66 and 78 °F) and at any relative humidity between 10 and 70 percent for at least 4 hours prior to a test.

(2) Assemble the complete dummy (with or without the lower legs) and seat it on a rigid flat-surface table, as shown in Figure P5 of this subpart.

(i) Unzip the torso jacket and remove the four ¼–20×¾″ bolts which attach the lumbar load transducer or its structural replacement to the pelvis weldment (drawing 210–4510) as shown in Figure P5 of this subpart.

(ii) Position the matching end of the rigid pelvis attachment fixture around the lumbar spine and align it over the four bolt holes.

(iii) Secure the fixture to the dummy with the four ¼–20×¾″ bolts and attach the fixture to the table. Tighten the mountings so that the pelvis-lumbar joining surface is horizontal within ±1 deg and the buttocks and upper legs of the seated dummy are in contact with the test surface.

(iv) Attach the loading adapter bracket to the upper part of the torso as shown in Figure P5 of this subpart and zip up the torso jacket.

(v) Point the upper arms vertically downward and the lower arms forward.

(3)(i) Flex the thorax forward three times from vertical until the torso reference plane reaches 30±2 degrees from vertical. The torso reference plane, as shown in figure P5 of this subpart, is defined by the transverse plane tangent to the posterior surface of the upper backplate of the spine box weldment (drawing 210–8020).

(ii) Remove all externally applied flexion forces and support the upper torso half in a vertical orientation for 30 minutes to prevent it from drooping.

(4) Remove the external support and after two minutes measure the initial orientation angle of the upper torso reference plane of the seated, unsupported dummy as shown in Figure P5 of this subpart. The initial orientation of the torso reference plane may not exceed 15 degrees.

(5) Attach the pull cable at the point of load application on the adaptor bracket while maintaining the initial torso orientation. Apply a pulling force in the midsagittal plane, as shown in Figure P5 of this subpart, at any upper torso flexion rate between 0.5 and 1.5 degrees per second, until the torso reference plane reaches 45±0.5 degrees of flexion relative to the vertical transverse plane.

(6) Continue to apply a force sufficient to maintain 45±0.5 degrees of flexion for 10 seconds, and record the highest applied force during the 10-second period.

(7) [Reserved]

(8) Release all force at the loading adaptor bracket as rapidly as possible and measure the return angle with respect to the initial angle reference plane as defined in paragraph (c)(4) of this section 3 to 4 minutes after the release.

§ 572.146 Test conditions and instrumentation.

(a) The test probe for thoracic impacts, except for attachments, shall be of rigid metallic construction and concentric about its longitudinal axis. Any attachments to the impactor such as suspension hardware, and impact vanes, must meet the requirements of § 572.144(c)(7) of this part. The impactor shall have a mass of 1.70 ± 0.02 kg (3.75 ± 0.05 lb) and a minimum mass moment of inertia 164 kg-cm^2 (0.145 lb-in-sec^2) in yaw and pitch about the CG of the probe. One-third (⅓) of the weight of suspension cables and any attachments to the impact probe must be included in the calculation of mass, and such components may not exceed five percent of the total weight of the test probe. The impacting end of the probe, perpendicular to and concentric with the longitudinal axis of the probe, has a flat, continuous, and non-deformable 50.8 ± 0.25 mm (2.00 ± 0.01 inch) diameter face with an edge radius of 7.6/12.7 mm (0.3/0.5 in). The impactor shall have a 53.3 mm (2.1 in) dia. cylindrical surface extending for a minimum of 25.4 mm (1.0 in) to the rear from the impact face. The probe's end opposite to the impact face has provisions for mounting an accelerometer with its sensitive axis collinear with the longitudinal axis of the probe. The impact probe has a free air resonant frequency not less than 1000 Hz limited to the direction of the longitudinal axis of the impactor.

(b) Head accelerometers shall have the dimensions, response characteristics, and sensitive mass locations specified in drawing SA 572–S4 and be mounted in the head as shown in drawing 210–0000.

(c) The neck force-moment transducer shall have the dimensions, response characteristics, and sensitive axis locations specified in drawing SA 572–S19 and be mounted at the upper neck transducer location as shown in drawing 210–0000. A lower neck transducer as specified in drawing SA 572–S19 is allowed to be mounted as optional instrumentation in place of part No. ATD6204, as shown in drawing 210–0000.

(d) The shoulder force transducers shall have the dimensions and response characteristics specified in drawing SA

572–S21 and be allowed to be mounted as optional instrumentation in place of part No. 210–3800 in the torso assembly as shown in drawing 210–0000.

(e) The thorax accelerometers shall have the dimensions, response characteristics, and sensitive mass locations specified in drawing SA 572–S4 and be mounted in the torso assembly in triaxial configuration at the T4 location, as shown in drawing 210–0000. Triaxial accelerometers may be mounted as optional instrumentation at T1, and T12, and in uniaxial configuration on the sternum at the midpoint level of ribs No. 1 and No. 3 and on the spine coinciding with the midpoint level of No. 3 rib, as shown in drawing 210–0000. If used, the accelerometers must conform to SA–572–S4.

(f) The chest deflection potentiometer shall have the dimensions and response characteristics specified in drawing SA–572–S50 and be mounted in the torso assembly as shown drawing 210–0000.

(g) The lumbar spine force/moment transducer may be mounted in the torso assembly as shown in drawing 210–0000 as optional instrumentation in place of part No. 210–4150. If used, the transducer shall have the dimensions and response characteristics specified in drawing SA–572–S20.

(h) The pubic force transducer may be mounted in the torso assembly as shown in drawing 210–0000 as optional instrumentation in place of part No. 921–0022–036. If used, the transducer shall have the dimensions and response characteristics specified in drawing SA–572–S18.

(i) The acetabulum force transducers may be mounted in the torso assembly as shown in drawing 210–0000 as optional instrumentation in place of part No. 210–4522. If used, the transducer shall have the dimensions and response characteristics specified in drawing SA–572–S22.

(j) The anterior-superior iliac spine transducers may be mounted in the torso assembly as shown in drawing 210–0000 as optional instrumentation in place of part No. 210–4540–1, –2. If used, the transducers shall have the dimensions and response characteristics specified in drawing SA–572–S17.

(k) The pelvis accelerometers may be mounted in the pelvis in triaxial configuration as shown in drawing 210–0000 as optional instrumentation. If used, the accelerometers shall have the dimensions and response characteristics specified in drawing SA–572–S4.

(l) The outputs of acceleration and force-sensing devices installed in the dummy and in the test apparatus specified by this part shall be recorded in individual data channels that conform to the requirements of SAE Recommended Practice J211/1, Rev. Mar 95 ''Instrumentation for Impact Tests—Part 1-Electronic Instrumentation'' (refer to §572.140(a)(3)), with channel classes as follows:

(1) Head acceleration—Class 1000

(2) Neck

(i) Force—Class 1000

(ii) Moments—Class 600

(iii) Pendulum acceleration—Class 180

(iv) Rotation potentiometer response (if used)—CFC 60.

(3) Thorax:

(i) Rib/sternum acceleration—Class 1000

(ii) Spine and pendulum accelerations—Class 180

(iii) Sternum deflection—Class 600

(iv) Shoulder force—Class 180

(4) Lumbar:

(i) Forces—Class 1000

(ii) Moments—Class 600

(iii) Torso flexion pulling force—Class 60 if data channel is used

(5) Pelvis

(i) Accelerations—Class 1000

(ii) Acetabulum, pubic symphysis—Class 1000,

(iii) Iliac wing forces—Class 180

(m) Coordinate signs for instrumentation polarity shall conform to the Sign Convention For Vehicle Crash Testing, Surface Vehicle Information Report, SAE J1733, 1994–12 (refer to §572.140(a)(4)).

(n) The mountings for sensing devices shall have no resonance frequency less than 3 times the frequency range of the applicable channel class.

(o) Limb joints shall be set at 1G, barely restraining the weight of the limbs when they are extended horizontally. The force required to move a limb segment shall not exceed 2G throughout the range of limb motion.

(p) Performance tests of the same component, segment, assembly, or fully assembled dummy shall be separated in time by a period of not less than 30 minutes unless otherwise noted.

(q) Surfaces of dummy components are not painted except as specified in this part or in drawings subtended by this part.

FIGURES TO SUBPART P

Figure P1

HEAD DROP TEST SET-UP SPECIFICATIONS

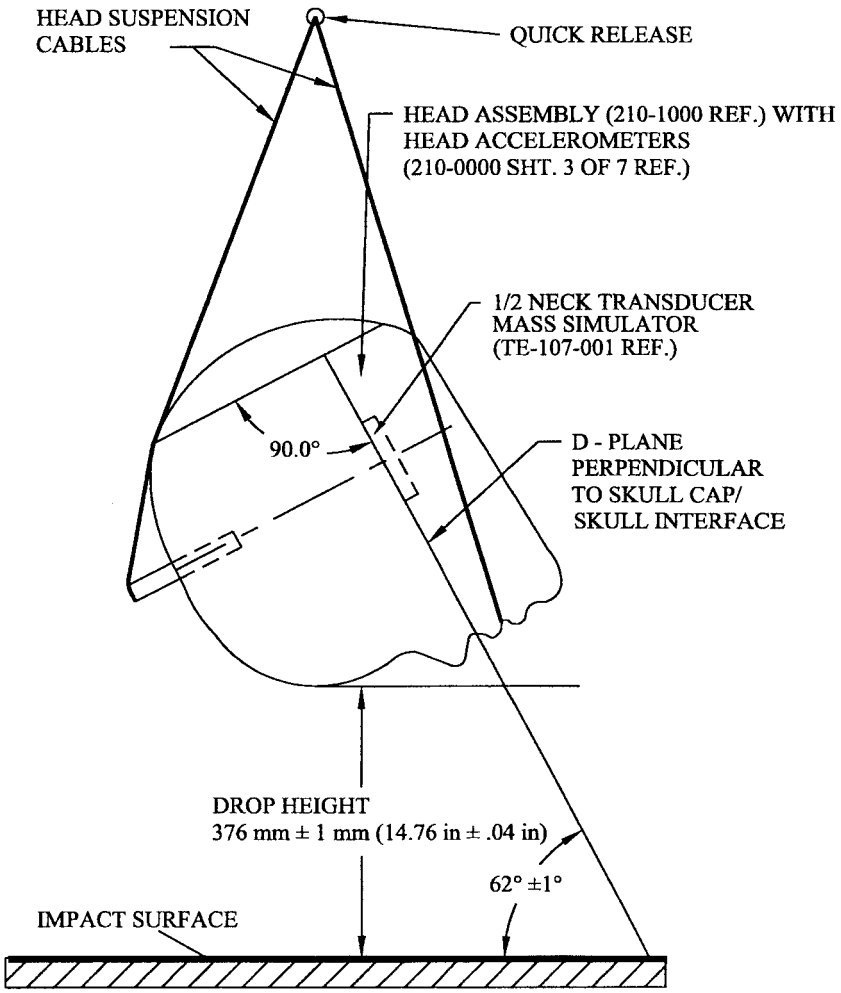

Figure P2

NECK FLEXION TEST SET-UP SPECIFICATIONS

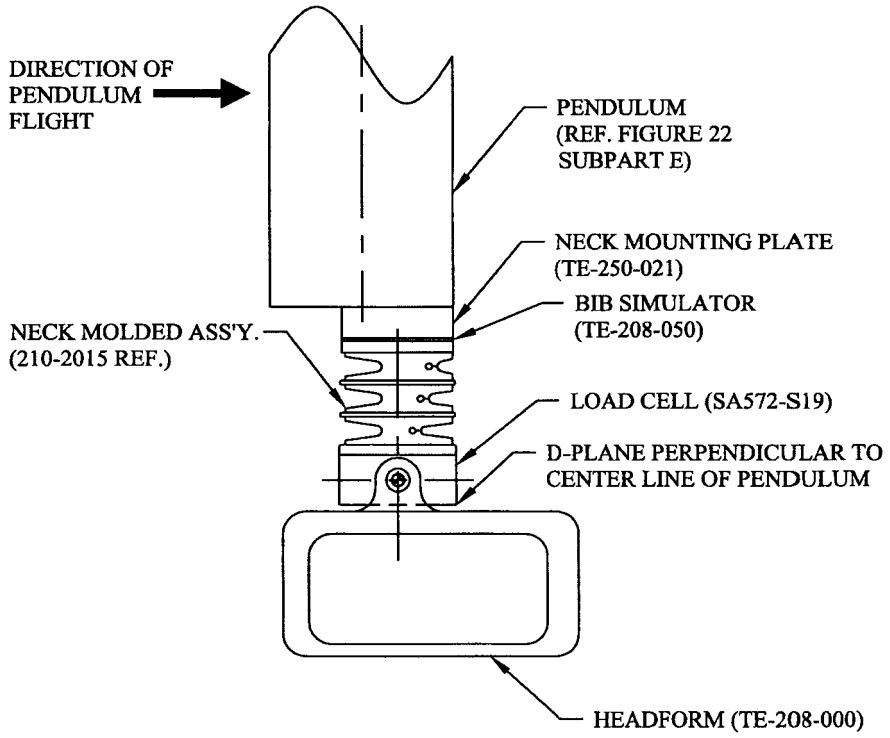

NOTE: MOUNT NECK AT LEADING EDGE OF PENDULUM TO AVOID INTERFERENCE WITH HEADFORM MOTION. PENDULUM SHOWN IN VERTICAL ORIENTATION.

Figure P3

NECK EXTENSION TEST SET-UP SPECIFICATIONS

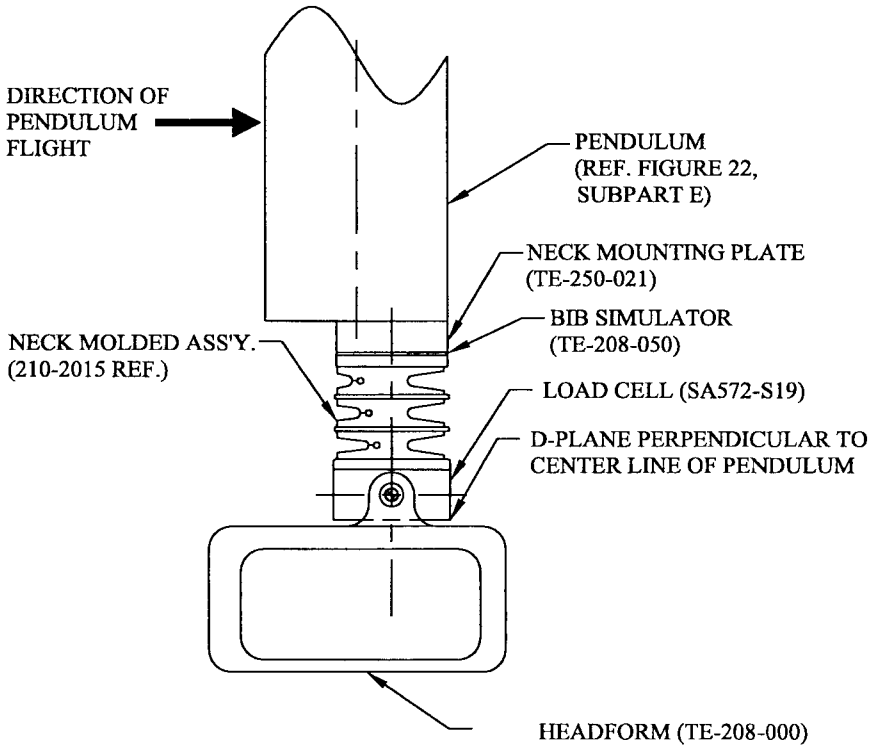

NOTE: MOUNT NECK AT LEADING EDGE OF PENDULUM TO AVOID INTERFERENCE WITH HEADFORM MOTION.
PENDULUM SHOWN IN VERTICAL ORIENTATION.

Figure P4

THORAX IMPACT TEST SET-UP SPECIFICATIONS

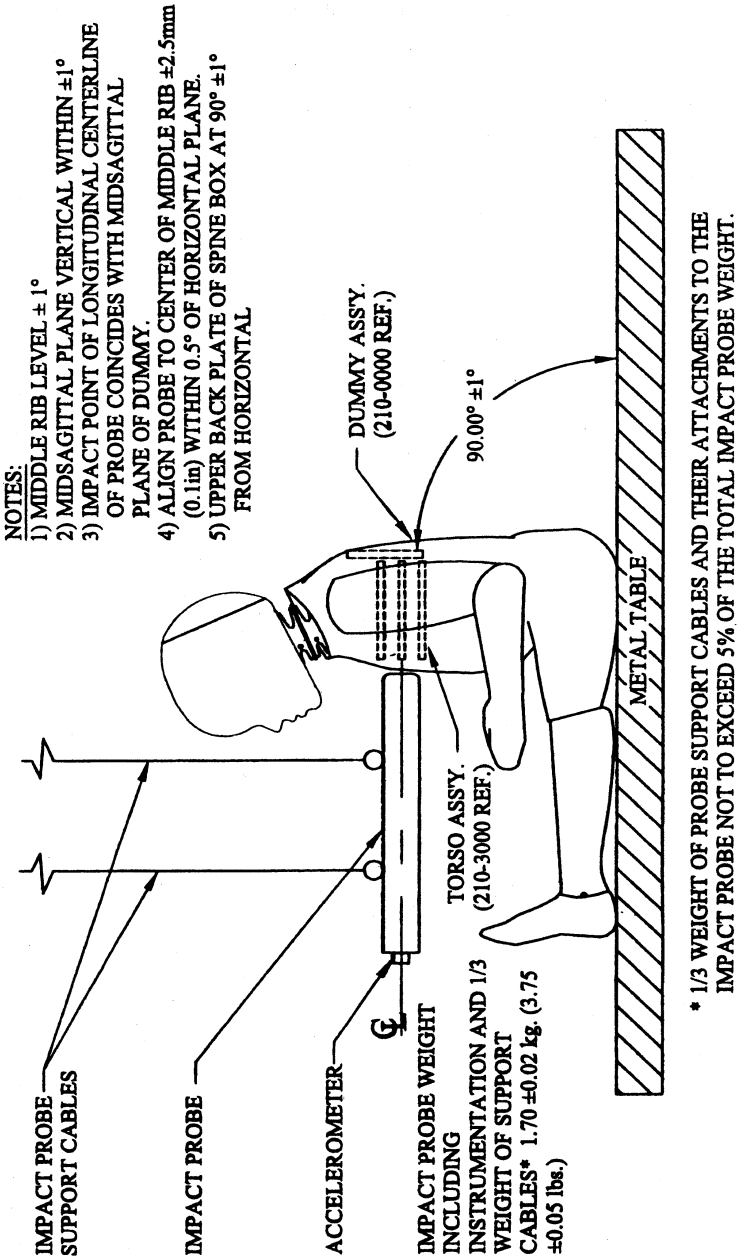

Figure P5

TORSO FLEXION TEST SET-UP SPECIFICATION

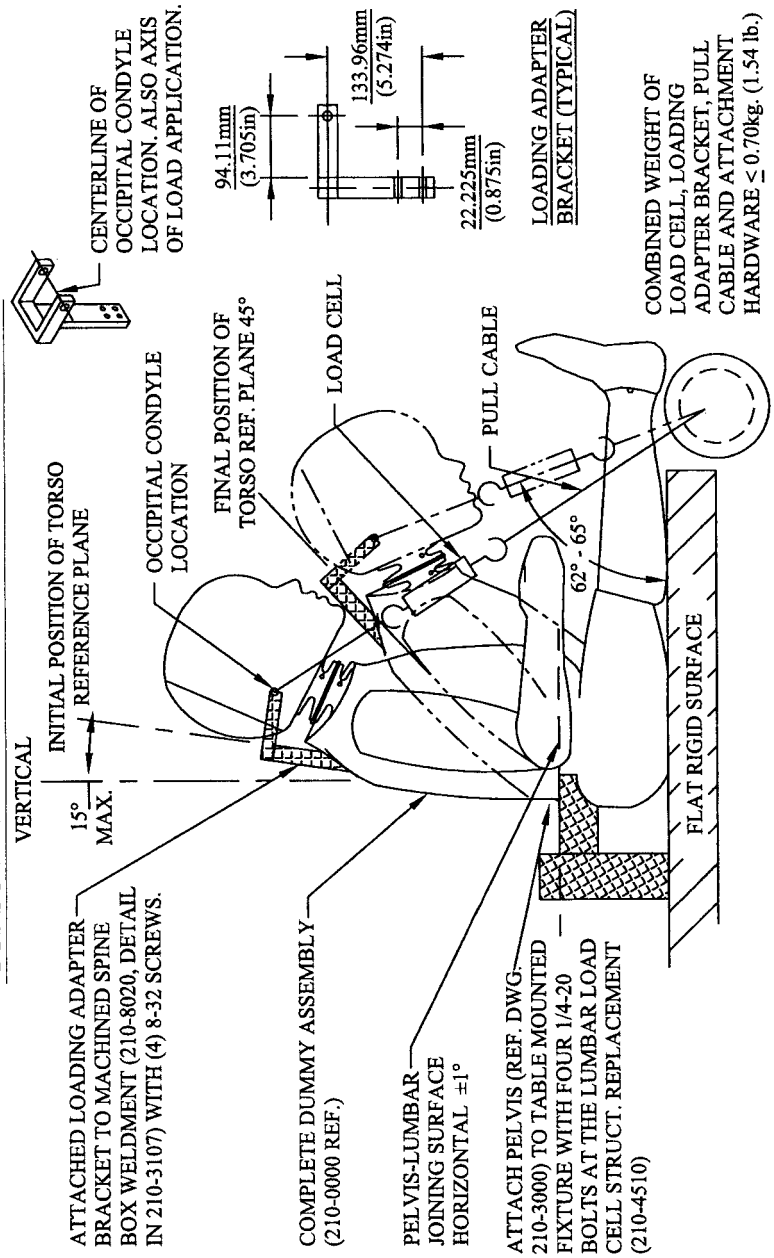

[65 FR 15262, Mar. 22, 2000, as amended at 66 FR 64376, Dec. 13, 2001]

Subpart R—CRABI 12-Month-Old Infant, Alpha Version

SOURCE: 65 FR 17188, Mar. 31, 2000, unless otherwise noted.

§ 572.150 Incorporation by reference.

(a) The following materials are incorporated by reference in this subpart R.

(1) A drawings and specifications package entitled ''Parts List and Drawings, Subpart R, CRABI 12-Month-Old Infant Crash Test Dummy (CRABI–12, Alpha version) August 2001'' and consisting of:

(i) Drawing No. 921022–001, Head Assembly, incorporated by reference in §§ 572.151, 572.152, 572.154, and 572.155;

(ii) Drawing No. 921022–041, Neck Assembly, incorporated by reference in §§ 572.151, 572.153, 572.154, and 572.155;

(iii) Drawing No. TE–3200–160, Headform, incorporated by reference in §§ 572.151 and 572.153;

(iv) Drawing No. 921022–060, Torso Assembly, incorporated by reference in §§ 572.151, 572.154, and 572.155;

(v) Drawing No. 921022–055, Leg Assembly, incorporated by reference in §§ 572.151, and 572.155 as part of a complete dummy assembly;

(vi) Drawing No. 921022–054, Arm Assembly, incorporated by reference in §§ 572.151, and 572.155 as part of the complete dummy assembly;

(2) A procedures manual entitled ''Procedures for Assembly, Disassembly and Inspection (PADI) Subpart R, CRABI 12-Month-Old Infant Crash Test Dummy (CRABI–12, Alpha version) August 2001'' incorporated by reference in § 572.155;

(3) SAE Recommended Practice J211/1, Rev. Mar95 ''Instrumentation for Impact Tests—Part 1—Electronic Instrumentation'', incorporated by reference in § 572.155;

(4) SAE J1733 1994–12 ''Sign Convention for Vehicle Crash Testing'', incorporated by reference in § 572.155.

(b) The Director of the Federal Register approved those materials incorporated by reference in accordance with 5 U.S.C. 552(a) and 1 CFR Part 51. Copies of the materials may be inspected at NHTSA's Docket Section, 400 Seventh Street S.W., room 5109, Washington, DC, or at the Office of the Federal Register, 800 North Capitol Street, NW, Suite 700, Washington, DC.

(c) The incorporated materials are available as follows:

(1) The drawings and specifications package referred to in paragraph (a)(1) of this section and the procedures manual referred to in paragraph (a)(2) of this section are available from Reprographic Technologies, 9000 Virginia Manor Road, Beltsville, MD 20705 (301) 419–5070.

(2) The SAE materials referred to paragraphs (a)(3) and (a)(4) of this section are available from the Society of Automotive Engineers, Inc., 400 Commonwealth Drive, Warrendale, PA 15096.

[65 FR 17188, Mar. 31, 2000, as amended at 66 FR 45784, Aug. 30, 2001]

§ 572.151 General description.

(a) The 12-month-old-infant crash test dummy is described by drawings and specifications containing the following materials:

(1) Technical drawings and specifications package 921022–000 (refer to § 572.150(a)(1)), the titles of which are listed in Table A of this section;

(2) Procedures for Assembly, Disassembly and Inspection document (PADI) (refer to § 572.150(a)(2)).

(b) The dummy consists of the component assemblies set out in the following Table A:

TABLE A

Component assembly	Drawing number
Head Assembly	921022–001.
Neck Assembly (complete)	921022–041.
Torso Assembly	921022–060.
Leg Assembly	921022–055 R&L.
Arm Assembly	921022–054 R&L.

(c) Adjacent segments of the dummy are joined in a manner such that, except for contacts existing under static conditions, there is no contact between metallic elements throughout the range of motion or under simulated crash impact conditions.

(d) The structural properties of the dummy are such that the dummy shall conform to this Subpart in every respect before its use in any test under this chapter.

§ 572.152 Head assembly and test procedure.

(a) The head assembly (refer to § 572.150(a)(1)(i)) for this test consists of the assembly (drawing 921022–001), triaxial mount block (SA572–80), and 3 accelerometers (drawing SA572–S4).

(b) *Frontal and rear impact.* (1) Frontal impact. When the head assembly in paragraph (a) of this section is dropped from a height of 376.0±1.0 mm (14.8±0.04 in) in accordance with paragraph (c)(3)(i) of this section, the peak resultant acceleration measured at the head CG shall not be less than 100 g or more than 120 g. The resultant acceleration vs. time history curve shall be unimodal, and the oscillations occurring after the main pulse shall be less than 17 percent of the peak resultant acceleration. The lateral acceleration shall not exceed ±15 g's.

(2) *Rear impact.* When the head assembly in paragraph (a) of this section is dropped from a height of 376.0±1.0 mm (14.8±0.04 in) in accordance with paragraph (c)(3)(ii) of this section, the peak resultant acceleration measured at the head CG shall be not less than 55 g and not more than 71 g. The resultant acceleration vs. time history curve shall be unimodal, and the oscillations occurring after the main pulse shall be less than 17 percent of the peak resultant acceleration. The lateral acceleration shall not exceed ±15 g's.

(c) *Head test procedure.* The test procedure for the head is as follows:

(1) Soak the head assembly in a controlled environment at any temperature between 18.9 and 25.6 °C (66 and 78 °F) and at any relative humidity between 10 and 70 percent for at least four hours prior to a test. These temperature and humidity levels shall be maintained throughout the entire testing period specified in this section.

(2) Before the test, clean the impact surface of the head skin and the steel impact plate surface with isopropyl alcohol, trichlorethane, or an equivalent. Both impact surfaces shall be clean and dry for testing.

(3)(i) For a frontal impact test, suspend the head assembly with its midsagittal plane in vertical orientation as shown in Figure R1 of this subpart. The lowest point on the forehead is 376.0±1.0 mm (14.8 ±0.04 in) from the impact surface. The 3.30 mm (0.13 in) diameter holes located on either side of the dummy's head are used to ensure that the head is level with respect to the impact surface. The angle between the lower surface plane of the neck transducer mass simulator (drawing 910420–003) and the plane of the impact surface is 45 ±1 degrees.

(ii) For a rear impact test, suspend the head assembly with its midsagittal plane in vertical orientation as shown in Figure R2 of this subpart. The lowest point on the back of the head is 376.0±1.0 mm (14.8 ±0.04 in) from the impact surface. The 3.30 mm (0.13 in) diameter holes located on either side of the dummy's head are used to ensure that the head is level with respect to the impact surface. The angle between the lower surface plane of the neck transducer structural replacement (drawing 910420–003) and the impact surface is 90 ±1 degrees.

(4) Drop the head assembly from the specified height by a means that ensures a smooth, instant release onto a rigidly supported flat horizontal steel plate which is 50.8 mm (2 in) thick and 610 mm (24 in) square. The impact surface shall be clean, dry and have a micro finish of not less than $203.2 \times 10-6$ mm (8 micro inches) (RMS) and not more than $2032.0 \times 10-6$ mm (80 micro inches) (RMS).

(5) Allow at least 2 hours between successive tests of the head assembly at the same impact point. For head impacts on the opposite side of the head, the 30-minute waiting period specified in § 572.155(m) does not apply.

§ 572.153 Neck-headform assembly and test procedure.

(a) The neck and headform assembly (refer to §§ 572.150(a)(1)(ii) and 572.150(a)(1)(iii)) for the purposes of this test consists of parts shown in CRABI neck test assembly (drawing TE–3200–100);

(b) When the neck and headform assembly, as defined in § 572.153(a), is tested according to the test procedure in § 572.153(c), it shall have the following characteristics:

(1) *Flexion.* (i) Plane D referenced in Figure R3 of this subpart shall rotate in the direction of pre-impact flight

with respect to the pendulum's longitudinal centerline not less than 75 degrees and not more than 86 degrees. Within this specified rotation corridor, the peak positive moment about the occipital condyles shall be not less than 36 N-m (26.6 ft-lbf) and not more than 45 N-m (33.2 ft-lbf).

(ii) The positive moment about the occipital condyles shall decay for the first time to 5 N-m (3.7 ft-lbf) between 60 ms and 80 ms after time zero.

(iii) The moment about the occipital condyles shall be calculated by the following formula: Moment (N-m) = My − (0.005842m) × (Fx), where My is the moment about the y-axis, Fx is the shear force measured by the neck transducer (drawing SA572 –S23) and 0.005842m is the distance from the point at which the load cell measures the force to the occipital condyle.

(2) *Extension*. (i) Plane D referenced in Figure R4 of this subpart shall rotate in the direction of preimpact flight with respect to the pendulum's longitudinal centerline not less than 80 degrees and not more than 92 degrees. Within the specified rotation corridor, the peak negative moment about the occipital condyles shall be not more than −12 Nm (−8.9 ft-lbf) and not less than −23 N-m (−17.0 ft-lbf) within the minimum and maximum rotation interval.

(ii) The negative moment about the occipital condyles shall decay for the first time to −5 Nm (−3.7 lbf-ft) between 76 ms and 90 ms after time zero.

(iii) The moment about the occipital condyles shall be calculated by the following formula: Moment (N-m) = My − (0.005842m) × (Fx), where My is the moment about the y-axis, Fx is the shear force measured by the neck transducer (drawing SA572 –S23) and 0.005842m is the distance from the point at which the load cell measures the force to the occipital condyle.

(c) *Test procedure*. (1) Soak the neck assembly in a controlled environment at any temperature between 20.6 and 22.2 °C (69 and 72 °F) and at any relative humidity between 10 and 70 percent for at least four hours prior to a test. These temperature and humidity levels shall be maintained throughout the testing period specified in this section.

(2) Torque the jam nut (drawing 9001336) on the neck cable (drawing ATD–6206) to 0.2 to 0.3 Nm (2–3 in-lbf).

(3) Mount the neck-headform assembly, defined in paragraph (b) of this section, on the pendulum so the midsagittal plane of the headform is vertical and coincides with the plane of motion of the pendulum as shown in Figure R3 for flexion and Figure R4 for extension tests.

(i) The moment and rotation data channels are defined to be zero when the longitudinal centerline of the neck and pendulum are parallel.

(ii) The test shall be conducted without inducing any torsion of the neck.

(4) Release the pendulum and allow it to fall freely to achieve an impact velocity of 5.2 ±0.1 m/s (17.1 ±0.3 ft/s) for flexion and 2.5 ±0.1 m/s (8.2 ±0.3 ft/s) for extension measured at the center of the pendulum accelerometer at the instant of contact with the honeycomb.

(i) Time-zero is defined as the time of initial contact between the pendulum striker plate and the honeycomb material. The pendulum data channel shall be defined to be zero at this time.

(ii) Stop the pendulum from the initial velocity with an acceleration vs. time pulse which meets the velocity change as specified in the following table. Integrate the pendulum acceleration data channel to obtain the velocity vs. time curve as indicated in Table B:

TABLE B.—PENDULUM PULSE

Time	Flexion		Time	Extension	
m/s	m/s	ft/s	ms	m/s	ft/s
10	1.6–2.3	5.2–7.5	6	0.8–1.2	2.6–3.9
20	3.4–4.2	11.2–13.8	10	1.5–2.1	4.9–6.9
25	4.3–5.2	14.1–17.1	14	2.2–2.9	7.2–9.5

§ 572.154 Thorax assembly and test procedure.

(a) Thorax Assembly (refer to § 572.150(a)(1)(iv)) . The thorax consists of the part of the torso assembly shown in drawing 921022–060.

(b) When the thorax of a completely assembled dummy (drawing 921022–000) is impacted by a test probe conforming to § 572.155(a) at 5.0 ±0.1m/s (16.5 ±0.3 ft/s) according to the test procedure in paragraph (c) of this section, the peak force, measured by the impact probe in accordance with paragraph § 572.155(a), shall be not less than 1514 N (340.7 lbf) and not more than 1796 N (404.1 lbf).

(c) *Test procedure.* (1) Soak the dummy in a controlled environment at any temperature between 20.6 and 22.2 °C (69 and 72 °F) and at any relative humidity between 10 and 70 percent for at least four hours prior to a test. These temperature and humidity levels shall be maintained throughout the entire testing period specified in this section.

(2) The test dummy is clothed in a cotton-polyester based tight fitting sweat shirt with long sleeves and ankle long pants whose combined weight is not more than 0.25 kg (.55 lbs).

(3) Seat and orient the dummy on a level seating surface without back support as shown in Figure R5 of this subpart, with the lower limbs extended forward, parallel to the midsagittal plane and the arms 0 to 5 degrees forward of vertical. The dummy's midsagittal plane is vertical within ±/1 degree and the posterior surface of the upper spine box is aligned at 90±/1 degrees from the horizontal. (Shim material may be used under the upper legs to maintain the dummy's specified spine box surface alignment).

(4) Establish the impact point at the chest midsagittal plane so that the impact point of the longitudinal centerline of the probe coincides with the dummy's midsagittal plane, is centered on the torso 196 ±/2.5 mm (7.7 ±/0.1 in) vertically from the plane of the seating surface, and is within 0.5 degrees of a horizontal plane.

(5) Impact the thorax with the test probe so that at the moment of contact the probe's longitudinal center line falls within 2 degrees of a horizontal line in the dummy's midsagittal plane.

(6) Guide the test probe during impact so that there is no significant lateral, vertical or rotational movement.

(7) No suspension hardware, suspension cables, or any other attachments to the probe, including the velocity vane, shall make contact with the dummy during the test.

[65 FR 17188, Mar. 31, 2000, as amended at 66 FR 45784, Aug. 30, 2001]

§ 572.155 Test conditions and instrumentation.

(a) The test probe for thoracic impacts, except for attachments, shall be of rigid metallic construction and concentric about its longitudinal axis. Any attachments to the impactor, such as suspension hardware, impact vanes, etc., must meet the requirements of § 572.154(c)(7). The impactor shall have a mass of 2.86 ± 0.02 kg (6.3 ± 0.05 lbs) and a minimum mass moment of inertia of 164 kg-cm^2 (0.145 lb-in-sec^2) in yaw and pitch about the CG of the probe. One-third of the weight of suspension cables and any attachments to the impact probe must be included in the calculation of mass, and such components may not exceed five percent of the total weight of the test probe. The impacting end of the probe, perpendicular to and concentric with the longitudinal axis of the probe, has a flat, continuous, and non-deformable 101.6 ± 0.25 mm (4.00 ± 0.01 in) diameter face with an edge radius of 7.6/12.7 mm (0.3/0.5 in). The impactor shall have a 101–103 mm (4–4.1 in) diameter cylindrical surface extending for a minimum of 12.5 mm (0.5 in) to the rear from the impact face. The probe's end opposite to the impact face has provisions for mounting an accelerometer with its sensitive axis collinear with the longitudinal axis of the probe. The impact probe shall have a free air resonant frequency of not less than 1000 Hz measured in line with the longitudinal axis of the impactor, using the test method shown in the Procedures for Assembly, Disassembly and Inspection (PADI) document referenced in § 572.151.

(b) Head accelerometers shall have the dimensions, response characteristics, and sensitive mass locations specified in drawing SA572–S4 and be mounted in the head as shown in drawing 921022–000.

(c) The neck force-moment transducer shall have the dimensions, response characteristics, and sensitive axis locations specified in drawing SA572–S23 and shall be mounted for testing as shown in drawing 921022–000 and in figures R3 and R4 of this subpart.

(d) The shoulder force transducers shall have the dimensions and response characteristics specified in drawing SA572–S25 and are allowed to be mounted as optional instrumentation in place of part No. 921022–022 in the torso assembly as shown in drawing 921022–000.

(e) The thorax accelerometers shall have the dimensions, response characteristics, and sensitive mass locations specified in drawing SA572–S4 and be mounted in the torso assembly in triaxial configuration as shown in drawing 921022–000.

(f) The lumbar spine and lower neck force/moment transducer shall have the dimensions and response characteristics specified in drawing SA572–S23 and are allowed to be mounted as optional instrumentation in the torso assembly in place of part No. 910420–003 as shown in drawing 921022–000.

(g) The pelvis accelerometers shall have the dimensions, response characteristics, and sensitive mass locations specified in drawing SA572–S4 and are allowed to be mounted as optional instrumentation in the pelvis in triaxial configuration as shown in drawing 921022–000.

(h) The pubic force transducer shall have the dimensions and response characteristics specified in drawing SA572–S24 and is allowed to be mounted as optional instrumentation in place of part No. 921022–050 in the torso assembly as shown in drawing 921022–000.

(i) The outputs of acceleration and force-sensing devices installed in the dummy and in the test apparatus specified by this part are recorded in individual data channels that conform to the requirements of SAE Recommended Practice J211/1, Rev. Mar95 ''Instrumentation for Impact Tests—Part 1—Electronic Instrumentation'' (refer to §572.150(a)(3)), with channel classes as follows:

(1) Head and headform acceleration—Class 1000.

(2) Neck :

(i) Forces—Class 1000;

(ii) Moments—Class 600;

(iii) Pendulum acceleration—Class 180;

(iv) Rotation potentiometer response (if used)—CFC 60.

(3) Thorax:

(i) Spine and pendulum accelerations—Class 180;

(ii) Shoulder forces—Class 600;

(4) Lumbar:

(i) Forces—Class 1000;

(ii) Moments —Class 600;

(5) Pelvis:

(i) Accelerations—Class 1000;

(ii) Pubic—Class 1000.

(j) Coordinate signs for instrumentation polarity shall conform to SAE J1733, 1994–12, ''Sign Convention For Vehicle Crash Testing, Surface Vehicle Information Report,'' (refer to §572.150(a)(4)).

(k) The mountings for sensing devices shall have no resonance frequency within a range of 3 times the frequency range of the applicable channel class.

(l) Limb joints shall be set at 1 g, barely restraining the weight of the limb when it is extended horizontally. The force required to move a limb segment shall not exceed 2 g throughout the range of limb motion.

(m) Performance tests of the same component, segment, assembly, or fully assembled dummy shall be separated in time by period of not less than 30 minutes unless otherwise noted.

(n) Surfaces of dummy components may not be painted except as specified in this subpart or in drawings referenced in §572.150.

[65 FR 17188, Mar. 31, 2000, as amended at 66 FR 45784, Aug. 30, 2001]

FIGURES TO SUBPART R

Figure R 1
FRONTAL HEAD DROP TEST SET-UP SPECIFICATIONS

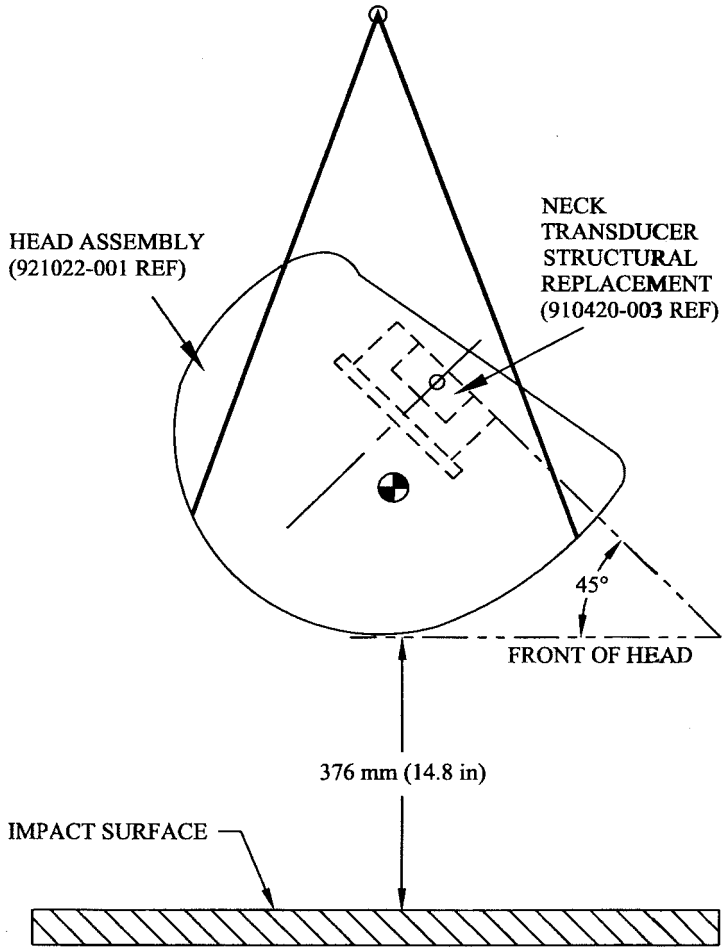

Figure R 2
REAR HEAD DROP TEST SET-UP SPECIFICATIONS

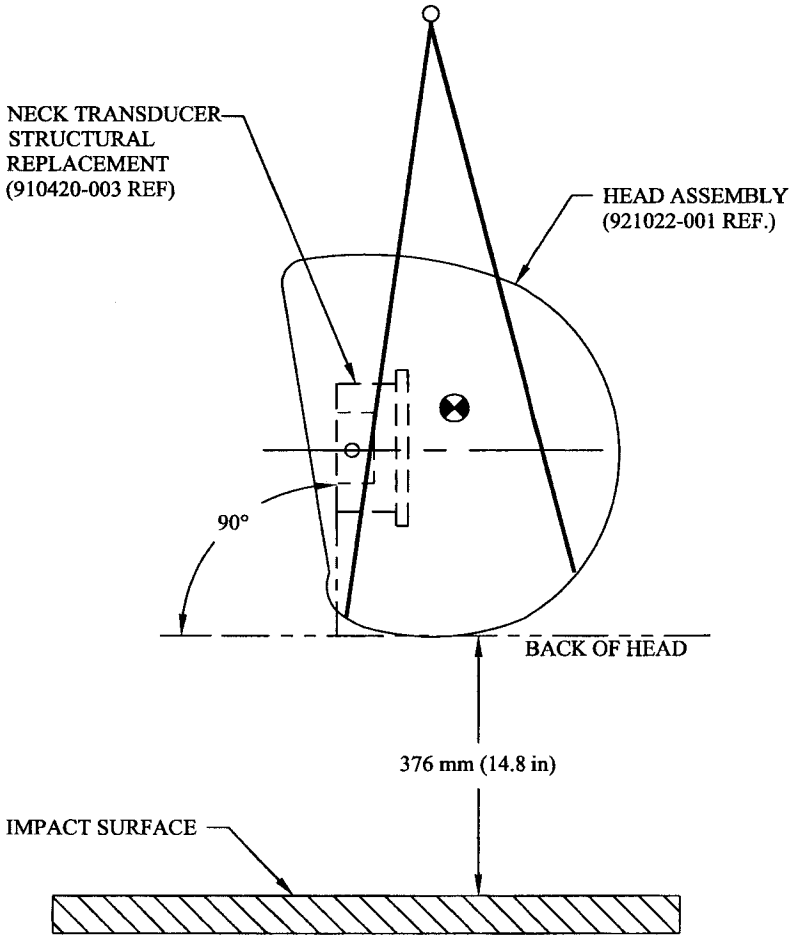

Figure R3
NECK FLEXION TEST SET-UP SPECIFICATIONS

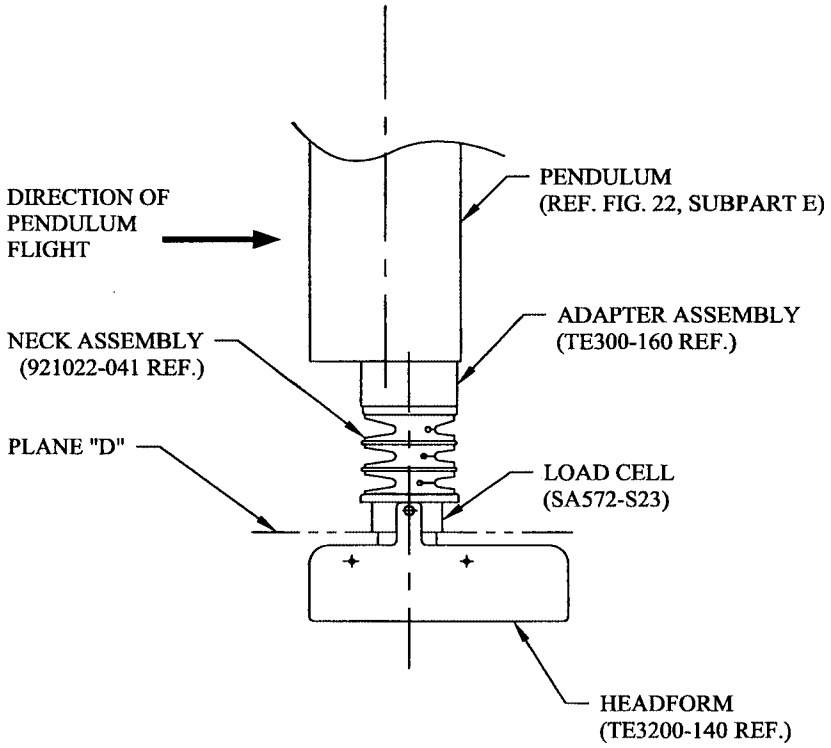

NOTE: MOUNT NECK AT LEADING EDGE OF PENDULUM TO AVOID INTERFERENCE.

Figure R4
NECK EXTENSION TEST SET-UP SPECIFICATIONS

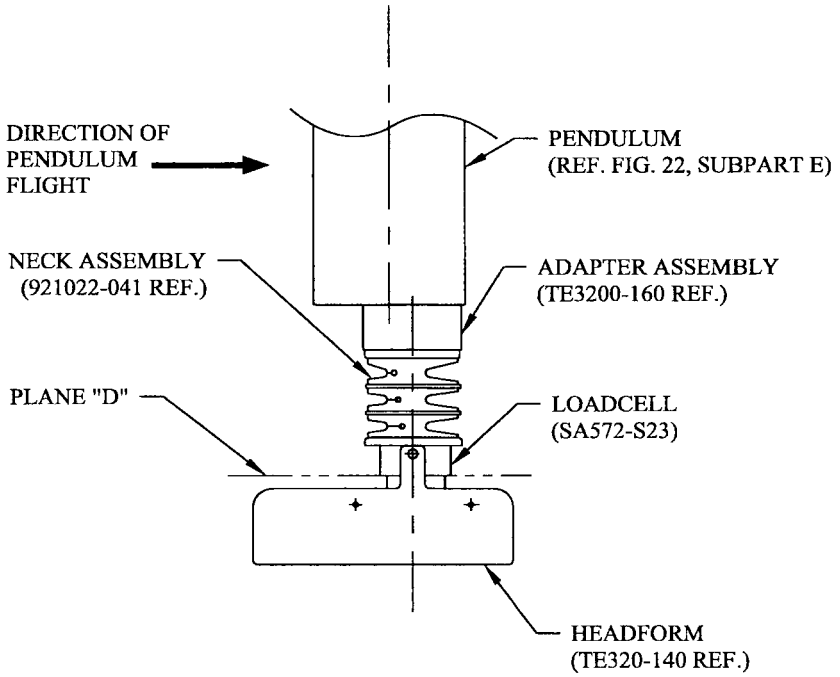

NOTE: MOUNT NECK AT LEADING EDGE OF PENDULUM TO AVOID INTERFERENCE.

Figure R 5
THORAX IMPACT TEST SET-UP SPECIFICATIONS

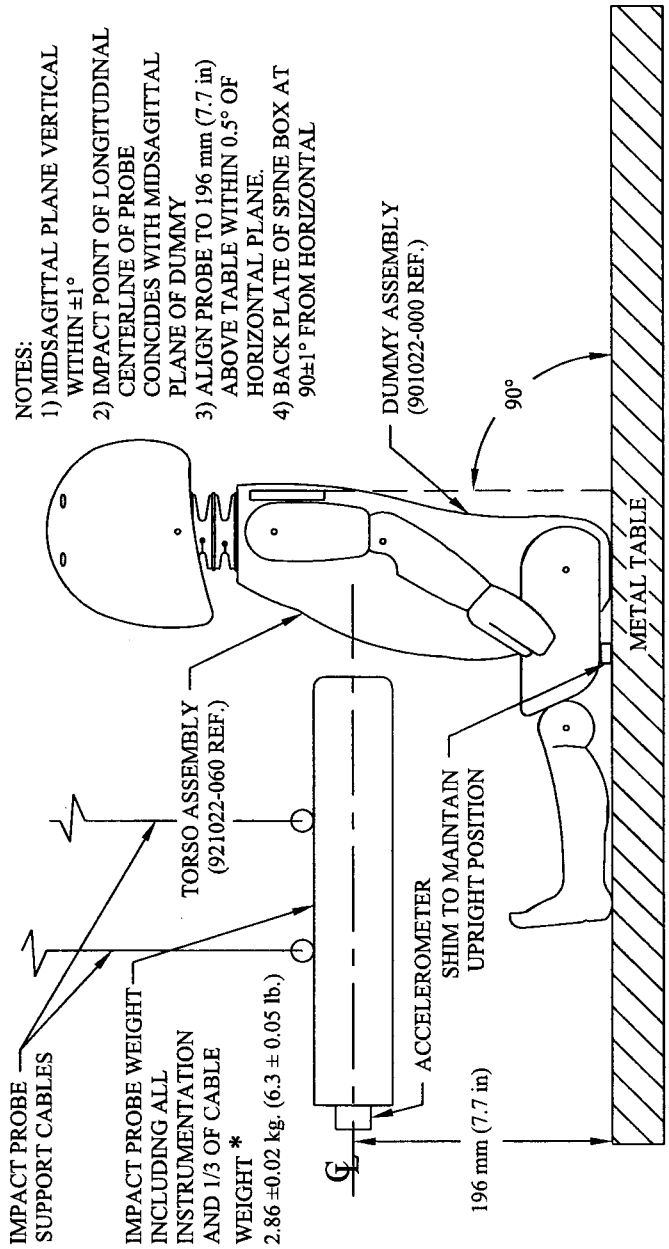

* 1/3 OF CABLE WEIGHT NOT TO EXCEED 5% OF THE TOTAL IMPACT PROBE WEIGHT.

PART 573—DEFECT AND NONCOMPLIANCE RESPONSIBILITY AND REPORTS

Sec.
573.1 Scope.
573.2 Purpose.
573.3 Application.
573.4 Definitions.
573.5 Defect and noncompliance responsibility.
573.6 Defect and noncompliance information report.
573.7 Quarterly reports.
573.8 Lists of purchasers, owners, lessors and lessees.
573.9 Address for submitting required reports and other information.
573.10 Reporting the sale or lease of defective or noncompliant tires.
573.11 Prohibition on sale or lease of new defective and noncompliant motor vehicles and items of replacement equipment.
573.12 Prohibition on sale or lease of new and used defective and noncompliant motor vehicle equipment.

AUTHORITY: 49 U.S.C. 30102–103, 30112, 30117–121, 30166–167; delegation of authority at 49 CFR 1.50.

SOURCE: 43 FR 60169, Dec. 26, 1978, unless otherwise noted.

§ 573.1 Scope.

This part:

(a) Sets forth the responsibilities under 49 U.S.C. 30117–30120 of manufacturers of motor vehicles and motor vehicle equipment with respect to safety-related defects and noncompliances with Federal motor vehicle safety standards in motor vehicles and items of motor vehicle equipment; and

(b) Specifies requirements for—

(1) Manufacturers to maintain lists of purchasers and owners notified of defective and noncomplying motor vehicles and motor vehicle original and replacement equipment,

(2) Reporting to the National Highway Traffic Safety Administration (NHTSA) defects in motor vehicles and motor vehicle equipment and noncompliances with motor vehicle safety standards prescribed under part 571 of this chapter, and

(3) Providing quarterly reports on defect and noncompliance notification campaigns.

[67 FR 45872, July 10, 2002]

§ 573.2 Purposes.

The purposes of this part are:

(a) To facilitate the notification of owners of defective and noncomplying motor vehicles and items of motor vehicle equipment, and the remedy of such defects and noncompliances, by equitably apportioning the responsibility for safety-related defects and noncompliances with Federal motor vehicle safety standards among manufacturers of motor vehicles and motor vehicle equipment; and

(b) To inform NHTSA of defective and noncomplying motor vehicles and items of motor vehicle equipment, and to obtain information for NHTSA on the adequacy of manufacturers' defect and noncompliance notification campaigns, on corrective action, on owner response, and to compare the defect incidence rate among different groups of vehicles.

[67 FR 45872, July 10, 2002]

§ 573.3 Application.

(a) Except as provided in paragraphs (g), (h), and (i) of this section, this part applies to manufacturers of complete motor vehicles, incomplete motor vehicles, and motor vehicle original and replacement equipment, with respect to all vehicles and equipment that have been transported beyond the direct control of the manufacturer.

(b) In the case of a defect or noncompliance decided to exist in a motor vehicle or equipment item imported into the United States, compliance with §§ 573.5 and 573.6 by either the fabricating manufacturer or the importer of the vehicle or equipment item shall be considered compliance by both.

(c) In the case of a defect or noncompliance decided to exist in a vehicle manufactured in two or more stages, compliance with §§ 573.5 and 573.6 by either the manufacturer of the incomplete vehicle or any subsequent manufacturer of the vehicle shall be considered compliance by all manufacturers.

(d) In the case of a defect or noncompliance decided to exist in an item of replacement equipment (except tires) compliance with §§ 573.5 and 573.6 by the brand name or trademark owner shall be considered compliance by the

manufacturer. Tire brand name owners are considered manufacturers (49 U.S.C. 10102(b)(1)(E)) and have the same reporting requirements as manufacturers.

(e) In the case of a defect or noncompliance decided to exist in an item of original equipment used in the vehicles of only one vehicle manufacturer, compliance with §§ 573.5 and 573.6 by either the vehicle or equipment manufacturer shall be considered compliance by both.

(f) In the case of a defect or noncompliance decided to exist in original equipment installed in the vehicles of more than one manufacturer, compliance with § 573.5 is required of the equipment manufacturer as to the equipment item, and of each vehicle manufacturer as to the vehicles in which the equipment has been installed. Compliance with § 573.6 is required of the manufacturer who is conducting the recall campaign.

(g) The provisions of § 573.10 apply to all persons.

(h) The provisions of § 573.11 apply to dealers, including retailers of motor vehicle equipment.

(i) The provisions of § 573.12 apply to all persons.

[43 FR 60169, Dec. 26, 1978, as amended at 60 FR 17268, Apr. 5, 1995; 66 FR 38162, July 23, 2001; 67 FR 19697, Apr. 23, 2002]

§ 573.4 Definitions.

For purposes of this part:

Act means 49 U.S.C. Chapter 301.

Administrator means the Administrator of the National Highway Traffic Safety Administration or his delegate.

First purchaser means first purchaser for purposes other than resale.

Leased motor vehicle means any motor vehicle that is leased to a person for a term of at least four months by a lessor who has leased five or more vehicles in the twelve months preceding the date of notification by the vehicle manufacturer of the existence of a safety-related defect or noncompliance with a Federal motor vehicle safety standard in the motor vehicle.

Lessee means a person who is the lessee of a leased motor vehicle as defined in this section.

Lessor means a person or entity that is the owner, as reflected on the vehicle's title, of any five or more leased vehicles (as defined in this section), as of the date of notification by the manufacturer of the existence of a safety-related defect or noncompliance with a Federal motor vehicle safety standard in one or more of the leased motor vehicles.

Original equipment means an item of motor vehicle equipment (other than a tire) that was installed in or on a motor vehicle at the time of its delivery to the first purchaser if the item of equipment was installed on or in the motor vehicle at the time of its delivery to a dealer or distributor for distribution, or was installed by the dealer or distributor with the express authorizations of the motor vehicle manufacturer.

Readable form means a form readable by the unassisted eye or readable by machine. If readable by machine, the submitting party must obtain written confirmation from the Office of Defects Investigation immediately prior to submission that the machine is readily available to NHTSA. For all similar information responses, once a manufacturer has obtained approval for the original response in that form, it will not have to obtain approval for future submissions in the same form. In addition, all coded information must be accompanied by an explanation of the codes used.

Replacement equipment means motor vehicle equipment other than original equipment as defined in this section, and tires.

[43 FR 60169, Dec. 26, 1978, as amended at 60 FR 17268, Apr. 5, 1995; 67 FR 45872, July 10, 2002]

§ 573.5 Defect and noncompliance responsibility.

(a) Each manufacturer of a motor vehicle shall be responsible for any safety-related defect or any noncompliance determined to exist in the vehicle or in any item of original equipment.

(b) Each manufacturer of an item of replacement equipment shall be responsible for any safety-related defect or any noncompliance determined to exist in the equipment.

[67 FR 45872, July 10, 2002]

§ 573.6 Defect and noncompliance information report.

(a) Each manufacturer shall furnish a report to the NHTSA for each defect in his vehicles or in his items of original or replacement equipment that he or the Administrator determines to be related to motor vehicle safety, and for each noncompliance with a motor vehicle safety standard in such vehicles or items of equipment which either he or the Administrator determines to exist.

(b) Each report shall be submitted not more than 5 working days after a defect in a vehicle or item of equipment has been determined to be safety related, or a noncompliance with a motor vehicle safety standard has been determined to exist. Information required by paragraph (c) of this section that is not available within that period shall be submitted as it becomes available. Each manufacturer submitting new information relative to a previously submitted report shall refer to the notification campaign number when a number has been assigned by the NHTSA.

(c) Each manufacturer shall include in each report the information specified below.

(1) The manufacturer's name: The full corporate or individual name of the fabricating manufacturer and any brand name or trademark owner of the vehicle or item of equipment shall be spelled out, except that such abbreviations as ''Co.'' or ''Inc.'', and their foreign equivalents, and the first and middle initials of individuals, may be used. In the case of a defect or noncompliance decided to exist in an imported vehicle or item of equipment, the agency designated by the fabricating manufacturer pursuant to 49 U.S.C. section 30164(a) shall be also stated. If the fabricating manufacturer is a corporation that is controlled by another corporation that assumes responsibility for compliance with all requirements of this part the name of the controlling corporation may be used.

(2) Identification of the vehicles or items of motor vehicle equipment potentially containing the defect or noncompliance, including a description of the manufacturer's basis for its determination of the recall population and a description of how the vehicles or items of equipment to be recalled differ from similar vehicles or items of equipment that the manufacturer has not included in the recall.

(i) In the case of passenger cars, the identification shall be by the make, line, model year, the inclusive dates (month and year) of manufacture, and any other information necessary to describe the vehicles.

(ii) In the case of vehicles other than passenger cars, the identification shall be by body style or type, inclusive dates (month and year) of manufacture and any other information necessary to describe the vehicles, such as GVWR or class for trucks, displacement (cc) for motorcycles, and number of passengers for buses.

(iii) In the case of items of motor vehicle equipment, the identification shall be by the generic name of the component (tires, child seating systems, axles, etc.), part number, size and function if applicable, the inclusive dates (month and year) of manufacture if available and any other information necessary to describe the items.

(iv) In the case of motor vehicles or items of motor vehicle equipment in which the component that contains the defect or noncompliance was manufactured by a different manufacturer from the reporting manufacturer, the reporting manufacturer shall identify the component and the manufacturer of the component by name, business address, and business telephone number. If the reporting manufacturer does not know the identity of the manufacturer of the component, it shall identify the entity from which it was obtained.

(v) In the case of items of motor vehicle equipment, the manufacturer of the equipment shall identify by name, business address, and business telephone number every manufacturer that purchases the defective or noncomplying component for use or installation in new motor vehicles or new items of motor vehicle equipment.

(3) The total number of vehicles or items of equipment potentially containing the defect or noncompliance, and where available the number of vehicles or items of equipment in each group identified pursuant to paragraph (c)(2) of this section.

(4) The percentage of vehicles or items of equipment specified pursuant to paragraph (c)(2) of this section estimated to actually contain the defect or noncompliance.

(5) A description of the defect or noncompliance, including both a brief summary and a detailed description, with graphic aids as necessary, of the nature and physical location (if applicable) of the defect or noncompliance.

(6) In the case of a defect, a chronology of all principal events that were the basis for the determination that the defect related to motor vehicle safety, including a summary of all warranty claims, field or service reports, and other information, with their dates of receipt.

(7) In the case of a noncompliance, the test results or other data on the basis of which the manufacturer determined the existence of the noncompliance.

(8)(i) A description of the manufacturer's program for remedying the defect or noncompliance. The manufacturer's program will be available for inspection in the public docket, Room 5109, Nassif Building, 400 Seventh St., SW., Washington, DC 20590.

(ii) The estimated date on which it will begin sending notifications to owners that there is a safety-related defect or noncompliance and that a remedy without charge will be available, and the estimated date on which it will have completed such notification. If a manufacturer subsequently becomes aware that either the beginning or the completion date reported to the agency will be delayed by more than two weeks, it shall promptly advise the agency of the delay and the reasons therefor, and furnish a revised estimate.

(iii) If a manufacturer intends to file a petition for an exemption from the recall requirements of the Act on the basis that a defect or noncompliance is inconsequential as it relates to motor vehicle safety, it shall notify NHTSA of that intention in its report to NHTSA of the defect or noncompliance under this section. If such a petition is filed and subsequently denied, the manufacturer shall provide the information required by paragraph (c)(8)(ii) of this section within five Federal government business days from the date the petition denial is published in the FEDERAL REGISTER.

(iv) If a manufacturer advises NHTSA that it intends to file such a petition for exemption from the notification and remedy requirements on the grounds that the defect or noncompliance is inconsequential as it relates to motor vehicle safety, and does not do so within the 30-day period established by 49 CFR 556.4(c), the manufacturer must submit the information required by paragraph (c)(8)(ii) of this section no later than the end of that 30-day period.

(9) A representative copy of all notices, bulletins, and other communications that relate directly to the defect or noncompliance and are sent to more than one manufacturer, distributor, dealer, or purchaser. These copies shall be submitted to the NHTSA not later than 5 days after they are initially sent to manufacturers, distributors, dealers, or purchasers. In the case of any notification sent by the manufacturer pursuant to part 577 of this chapter, the copy of the notification shall be submitted by certified mail.

(10) Except as authorized by the Administrator, the manufacturer shall submit a copy of its proposed owner notification letter to the Office of Defects Investigation (''ODI'') no fewer than five Federal government business days before it intends to begin mailing it to owners. Submission shall be made by any means which permits the manufacturer to verify promptly that the copy of the proposed letter was in fact received by ODI and the date it was received by ODI.

(11) The manufacturer's campaign number, if it is not identical to the identification number assigned by NHTSA.

[43 FR 60169, Dec. 26, 1978, as amended at 44 FR 20437, Apr. 5, 1979; 48 FR 44081, Sept. 27, 1983; 60 FR 17268, Apr. 5, 1995; 61 FR 278, Jan. 4, 1996. Redesignated at 67 FR 45872, July 10, 2002]

§ 573.7 Quarterly reports.

(a) Each manufacturer who is conducting a defect or noncompliance notification campaign to manufacturers, distributors, dealers, or owners shall

submit to NHTSA a report in accordance with paragraphs (b), (c), and (d) of this section. Unless otherwise directed by the NHTSA, the information specified in paragraphs (b)(1) through (5) of this section shall be included in the quarterly report, with respect to each notification campaign, for each of six consecutive quarters beginning with the quarter in which the campaign was initiated (i.e., the date of initial mailing of the defect or noncompliance notification to owners) or corrective action has been completed on all defective or noncomplying vehicles or items of replacement equipment involved in the campaign, whichever occurs first.

(b) Each report shall include the following information identified by and in the order of the subparagraph headings of this paragraph.

(1) The notification campaign number assigned by NHTSA.

(2) The date notification began and the date completed.

(3) The number of vehicles or items of equipment involved in the notification campaign.

(4) The number of vehicles and equipment items which have been inspected and repaired and the number of vehicles and equipment items inspected and determined not to need repair.

(5) The number of vehicles or items of equipment determined to be unreachable for inspection due to export, theft, scrapping, failure to receive notification, or other reasons (specify). The number of vehicles or items or equipment in each category shall be specified.

(6) In reports by equipment manufacturers, the number of items of equipment repaired and/or returned by dealers, other retailers, and distributors to the manufacturer prior to their first sale to the public.

(c) Information supplied in response to the paragraphs (b)(4) and (5) of this section shall be cumulative totals.

(d) The reports required by this section shall be submitted in accordance with the following schedule, except that if the due date specified below falls on a Saturday, Sunday or Federal holiday, the report shall be submitted on the next day that is a business day for the Federal government:

(1) For the first calendar quarter (January 1 through March 31), on or before April 30;

(2) For the second calendar quarter (April 1 through June 30), on or before July 30;

(3) For the third calendar quarter (July 1 through September 30), on or before October 30; and

(4) For the fourth calendar quarter (October 1 through December 31), on or before January 30.

[51 FR 398, Jan. 6, 1986, as amended at 60 FR 17269, Apr. 5, 1995. Redesignated at 67 FR 45872, July 10, 2002]

§573.8 Lists of purchasers, owners, lessors and lessees.

(a) Each manufacturer of motor vehicles shall maintain, in a form suitable for inspection such as computer information storage devices or card files, a list of the names and addresses of the registered owners, as determined through State motor vehicle registration records or other sources, or the most recent purchasers where the registered owners are unknown, for all vehicles involved in a defect or noncompliance notification campaign initiated after the effective date of this part. The list shall include the vehicle identification number for each vehicle and the status of remedy with respect to each vehicle, updated as of the end of each quarterly reporting period specified in §573.6. Each list shall be retained, beginning with the date on which the defect or noncompliance information report required by §573.5 is initially submitted to the NHTSA, for 5 years.

(b) Each manufacturer (including brand name owners) of tires shall maintain, in a form suitable for inspection such as computer information storage devices or card files, a list of the names and addresses of the first purchasers of his tires for all tires involved in a defect or noncompliance notification campaign initiated after the effective date of this part. The list shall include the tire identification number of all tires and shall show the status of remedy with respect to each owner involved in each notification campaign, updated as of the end of

each quarterly reporting period specified in § 573.6. Each list shall be retained, beginning with the date on which the defect information report is initially submitted to the NHTSA, for 3 years.

(c) For each item of equipment involved in a defect or noncompliance notification campaign initiated after the effective date of this part, each manufacturer of motor vehicle equipment other than tires shall maintain, in a form suitable for inspection, such as computer information storage devices or card files, a list of the names and addresses of each distributor and dealer of such manufacturer, each motor vehicle or motor vehicle equipment manufacturer and most recent purchaser known to the manufacturer to whom a potentially defective or noncomplying item of equipment has been sold and to whom notification is sent, the number of such items sold to each, and the date of shipment. The list shall show as far as is practicable the number of items remedied or returned to the manufacturer and the dates of such remedy or return. Each list shall be retained, beginning with the date on which the defect report required by § 573.5 is initially submitted to the NHTSA, for 5 years.

(d) Each lessor of leased motor vehicles that receives a notification from the manufacturer of such vehicles that the vehicle contains a safety-related defect or fails to comply with a Federal motor vehicle safety standard shall maintain, in a form suitable for inspection, such as computer information storage devices or card files, a list of the names and addresses of all lessees to which the lessor has provided notification of a defect or noncompliance pursuant to 49 CFR 577.5(h). The list shall also include the make, model, model year, and vehicle identification number of each such leased vehicle, and the date on which the lessor mailed notification of the defect or noncompliance to the lessee. The information required by this paragraph must be retained by the lessor for one calendar year from the date the vehicle lease expires.

[43 FR 60169, Dec. 26, 1978, as amended at 44 FR 20437, Apr. 5, 1979; 60 FR 17269, Apr. 5, 1995; 61 FR 278, Jan. 4, 1996. Redesignated at 67 FR 45872, July 10, 2002]

§ 573.9 Address for submitting required reports and other information.

All required reports and other information, except as otherwise required by this part, shall be submitted to the Associate Administrator for Enforcement, National Highway Traffic Safety Administration, Washington, DC 20590.

§ 573.10 Reporting the sale or lease of defective or noncompliant tires.

(a) *Reporting requirement.* Subject to paragraph (b) of this section, any person who knowingly and willfully sells or leases for use on a motor vehicle a defective tire or a tire which is not compliant with an applicable tire safety standard with actual knowledge that the manufacturer of such tire has notified its dealers of such defect or noncompliance as required under 49 U.S.C. 30118(c) or as required by an order under 49 U.S.C. 30118(b) must report that sale or lease to the Associate Administrator for Safety Assurance, National Highway Traffic Safety Administration, 400 7th Street, SW., Washington, DC 20590.

(b) *Exclusions from reporting requirement.* Paragraph (a) of this section is not applicable where, before delivery under a sale or lease of a tire:

(1) The defect or noncompliance of the tire is remedied as required under 49 U.S.C. 30120; or

(2) Notification of the defect or noncompliance is required by an order under 49 U.S.C. 30118(b), but enforcement of the order is restrained or the order is set aside in a civil action to which 49 U.S.C. 30121(d) applies.

(c) *Contents of report; requirement of signature.* (1) A report submitted pursuant to paragraph (a) of this section must contain the following information, where that information is available to the person selling or leasing the defective or noncompliant tire:

(i) A statement that the report is being submitted pursuant to 49 CFR 573.10(a) (sale or lease of defective or noncompliant tires);

(ii) The name, address and phone number of the person who purchased or leased the tire;

(iii) The name of the manufacturer of the tire;

(iv) The tire's brand name, model name, and size;

(v) The tire's DOT identification number;

(vi) The date of the sale or lease; and

(vii) The name, address, and telephone number of the seller or lessor.

(2) Each report must be dated and signed, with the name of the person signing the report legibly printed or typed below the signature.

(d) Reports required to be submitted pursuant to this section must be submitted no more than that five working days after a person to whom a tire covered by this section has been sold or leased has taken possession of that tire. Submissions must be made by any means which permits the sender to verify promptly that the report was in fact received by NHTSA and the day it was received by NHTSA.

[65 FR 81413, Dec. 26, 2000]

§ 573.11 Prohibition on sale or lease of new defective and noncompliant motor vehicles and items of replacement equipment.

(a) If notification is required by an order under 49 U.S.C. 30118(b) or is required under 49 U.S.C. 30118(c) and the manufacturer has provided to a dealer (including retailers of motor vehicle equipment) notification about a new motor vehicle or new item of replacement equipment in the dealer's possession, including actual and constructive possession, at the time of notification that contains a defect related to motor vehicle safety or does not comply with an applicable motor vehicle safety standard issued under 49 CFR part 571, the dealer may sell or lease the motor vehicle or item of replacement equipment only if:

(1) The defect or noncompliance is remedied as required by 49 U.S.C. 30120 before delivery under the sale or lease; or

(2) When the notification is required by an order under 49 U.S.C. 30118(b), enforcement of the order is restrained or the order is set aside in a civil action to which 49 U.S.C. 30121(d) applies.

(b) Paragraph (a) of this section does not prohibit a dealer from offering the vehicle or equipment for sale or lease, provided that the dealer does not sell or lease it.

[67 FR 19697, Apr. 23, 2002]

§ 573.12 Prohibition on sale or lease of new and used defective and noncompliant motor vehicle equipment.

(a) Subject to § 573.12(b), no person may sell or lease any new or used item of motor vehicle equipment (including a tire) as defined by 49 U.S.C. 30102(a)(7), for installation on a motor vehicle, that is the subject of a decision under 49 U.S.C. 30118(b) or a notice required under 49 U.S.C. 30118(c), in a condition that it may be reasonably used for its original purpose.

(b) Paragraph (a) of this section is not applicable where:

(1) The defect or noncompliance is remedied as required under 49 U.S.C. 30120 before delivery under the sale or lease;

(2) Notification of the defect or noncompliance is required by an order under 49 U.S.C. 30118(b), but enforcement of the order is restrained or the order is set aside in a civil action to which 49 U.S.C. 30121(d) applies.

[67 FR 19698, Apr. 23, 2002]

PART 574—TIRE IDENTIFICATION AND RECORDKEEPING

Sec.

574.1 Scope.
574.2 Purpose.
574.3 Definitions.
574.4 Applicability.
574.5 Tire identification requirements.
574.6 Identification mark.
574.7 Information requirements—new tire manufacturers, new tire brand name owners.
574.8 Information requirements—tire distributors and dealers.
574.9 Requirements for motor vehicle dealers.
574.10 Requirements for motor vehicle manufacturers.

AUTHORITY: 49 U.S.C. 322, 30111, 30115, 30117, and 30166; delegation of authority at 49 CFR 1.50.

EDITORIAL NOTE: An interpretation of manufacturer's designee issued by NHTSA and published at 36 FR 9780, May 28, 1971, provides as follows:

''A request for an interpretation has been received from the Rubber Manufacturers Association asking that it be made clear that, under the Tire Identification and Recordkeeping Regulation (part 574), particularly §§ 574.7 and 574.8, only the tire manufacturer, brand name owner, or retreader may designate a third party to provide the necessary recording forms or to maintain the records required by the regulation.

''Another person has requested an interpretation concerning the questions whether: (1) A tire manufacturer, brand name owner or retreader may designate one or more persons to be its designee for the purpose of maintaining the information, (2) an independent distributor or dealer may select a designee for the retention of the manufacturer's records, provided the manufacturer approves the designation, and (3) the independent distributor or dealer may seek administrative relief in the event he believes the information retained by the manufacturer is being used to his detriment.

''Under section 113(f) of the National Traffic and Motor Vehicle Safety Act (15 U.S.C. 1402(f) and part 574, it is the tire manufacturer who has the ultimate responsibility for maintaining the records of first purchasers. Therefore, it is the tire manufacturer or his designee who must maintain these records. The term *designee*, as used in the regulation, was not intended to preclude multiple designees; if the tire manufacturer desires, he may designate more than one person to maintain the required information. Furthermore, neither the Act nor the regulation prohibits the distributor or dealer from being the manufacturer's designee nor do they prohibit a distributor or dealer from selecting someone to be the manufacturer's designee provided the manufacturer approves of the selection.

''With respect to the possibility of manufacturers using the maintained information to the detriment of a distributor or dealer, the NHTSA will of course investigate claims by distributors or dealers of alleged misconduct and, if the maintained information is being misused, take appropriate action.

''Issued under the authority of sections 103, 113, and 119 of the National Traffic and Motor Vehicle Safety Act, 15 U.S.C. 1392, 1402, and 1407, and the delegation of authority at 49 CFR 1.51.''

§ 574.1 Scope.

This part sets forth the method by which new tire manufacturers and new tire brand name owners shall identify tires for use on motor vehicles and maintain records of tire purchasers, and the methods by which retreaders and retreaded tire brand name owners shall identify tires for use on motor vehicles. This part also sets forth the methods by which independent tire dealers and distributors shall record, on registration forms, their names and addresses and the identification number of the tires sold to tire purchasers and provide the forms to the purchasers, so that the purchasers may report their names to the new tire manufacturers and new tire brand name owners, and by which other tire dealers and distributors shall record and report the names of tire purchasers to the new tire manufacturers and new tire brand name owners.

(Authority: Secs. 108, 119, and 201, Pub. L. 89–563, 80 Stat. 718 (15 U.S.C. 1392, 1407, and 1421); sec. 4, Pub. L. 97–311, 96 Stat. 1619 (15 U.S.C. 1418); and delegation of authority at 49 CFR 1.50)

[49 FR 4760, Feb. 8, 1984]

§ 574.2 Purpose.

The purpose of this part is to facilitate notification to purchasers of defective or nonconforming tires, pursuant to Sections 30118 and 30119 of Title 49, United States Code, so that they may take appropriate action in the interest of motor vehicle safety.

[61 FR 29495, June 11, 1996]

§ 574.3 Definitions.

(a) *Statutory definitions*. All terms in this part that are defined in Section 30102 of Title 49, United States Code, are used as defined therein.

(b) *Motor vehicle safety standard definitions*. Unless otherwise indicated, all terms used in this part that are defined in the Motor Vehicle Safety Standards, part 571 of this subchapter (hereinafter the Standards), are used as defined therein.

(c)(1) *Independent* means, with respect to a tire distributor or dealer, one whose business is not owned or controlled by a tire manufacturer or brand name owner.

(2) *Mileage contract purchaser* means a person who purchases or leases tire use on a mileage basis.

(3) *New tire brand name owner* means a person, other than a new tire manufacturer, who owns or has the right to control the brand name of a new tire or a person who licenses another to purchase new tires from a new tire manufacturer bearing the licensor's brand name.

(4) *Retreaded tire brand name owner* means a person, other than a retreader, who owns or has the right to control the brand name of a retreaded tire or a person who licenses another to purchase retreaded tires from a retreader bearing the licensor's brand name.

(5) *Tire purchaser* means a person who buys or leases a new tire, or who buys or leases for 60 days or more a motor vehicle containing a new tire for purposes other than resale.

(Authority: Secs. 103, 108, 112, 119, 201, Pub. L. 89–563, 80 Stat. 718 (15 U.S.C. 1392, 1397, 1401, 1407, 1421); secs. 102, 103, 104, Pub. L. 93–492, 88 Stat. 1470 (15 U.S.C. 1411–1420); 92 Stat. 2689 (15 U.S.C. 1418); delegation of authority at 49 CFR 1.51)

[36 FR 1197, Jan. 26, 1971, as amended at 44 FR 7964, Feb. 8, 1979; 49 FR 38612, Oct. 1, 1984; 61 FR 29495, June 11, 1996]

§ 574.4 Applicability.

This part applies to manufacturers, brand name owners, retreaders, distributors, and dealers of new and retreaded tires, and new non-pneumatic tires and non-pneumatic tire assemblies for use on motor vehicles manufactured after 1948 and to manufacturers and dealers of motor vehicles manufactured after 1948. However, it does not apply to persons who retread tires solely for their own use.

[36 FR 5422, Mar. 23, 1971, as amended at 55 FR 29596, July 20, 1990]

§ 574.5 Tire identification requirements.

Each tire manufacturer shall conspicuously label on one sidewall of each tire it manufactures, except tires manufactured exclusively for mileage-contract purchasers, or non-pneumatic tires or non-pneumatic tire assemblies, by permanently molding into or onto the sidewall, in the manner and location specified in Figure 1, a tire identification number containing the information set forth in paragraphs (a) through (d) of this section. Each tire retreader, except tire retreaders who retread tires solely for their own use, shall conspicuously label one sidewall of each tire it retreads by permanently molding or branding into or onto the sidewall, in the manner and location specified in Figure 2, a tire identification number containing the information set forth in paragraphs (a) through (d) of this section. In addition, the DOT symbol required by Federal Motor Vehicle Safety Standards shall be located as shown in Figures 1 and 2. The DOT symbol shall not appear on tires to which no Federal Motor Vehicle Safety Standard is applicable, except that the DOT symbol on tires for use on motor vehicles other than passenger cars may, prior to retreading, be removed from the sidewall or allowed to remain on the sidewall, at the retreader's option. The symbols to be used in the tire identification number for tire manufacturers and retreaders are: ''A, B, C, D, E, F, H, J, K, L, M, N, P, R, T, U, V, W, X, Y, 1, 2, 3, 4, 5, 6, 7, 8, 9, 0''. Tires manufactured or retreaded exclusively for mileage-contract purchasers are not required to contain a tire identification number if the tire contains the phrase ''for mileage contract use only'' permanently molded into or onto the tire sidewall in lettering at least one-quarter inch high. Each manufacturer of a non-pneumatic tire or a non-pneumatic tire assembly shall permanently mold, stamp or otherwise permanently mark into or onto one side of the non-pneumatic tire or non-pneumatic tire assembly a tire identification number containing the information set forth in paragraphs (a) through (d) of this section. In addition, the DOT symbol required by the Federal motor vehicle safety standards shall be positioned relative to the tire identification number as shown in Figure 1, and the symbols to be used for the other information are those listed above. The labeling for a non-pneumatic tire or a non-pneumatic tire assembly shall be in the manner specified in Figure 1 and positioned on the non-pneumatic tire or non-pneumatic tire assembly such that

it is not placed on the tread or the outermost edge of the tire and is not obstructed by any portion of the non-pneumatic rim or wheel center member designated for use with that non-pneumatic tire in S4.4 of Standard No. 129 (49 CFR 571.129).

(a) *First grouping*. The first group, of two or three symbols, depending on whether the tire is new or retreaded, shall represent the manufacturer's assigned identification mark (see § 574.6).

(b) *Second grouping*. For new tires, the second group, of no more than two symbols, shall be used to identify the tire size. For a new non-pneumatic tire or a non-pneumatic tire assembly, the second group, of not more than two symbols, shall be used to identify the non-pneumatic tire identification code. For retreaded tires, the second group, of no more than two symbols, shall identify the retread matrix in which the tire was processed or a tire size code if a matrix was not used to process the retreaded tire. Each new-tire manufacturer and retreader shall maintain a record of each symbol used, with the corresponding matrix or tire size and shall provide such record to the NHTSA upon written request.

(c) *Third grouping*. The third group, consisting of no more than four symbols, may be used at the option of the manufacturer or retreader as a descriptive code for the purpose of identifying significant characteristics of the tire. However, if the tire is manufactured for a brand name owner, one of the functions of the third grouping shall be to identify the brand name owner. Each manufacturer or retreader who uses the third grouping shall maintain a detailed record of any descriptive or brand name owner code used, which shall be provided to the Bureau upon written request.

(d) *Fourth grouping*. For tires produced or retreaded on and after July 2, 2000, the fourth grouping, consisting of four numerical symbols, must identify the week and year of manufacture. The first two symbols must identify the week of the year by using ''01'' for the first full calendar week in each year, ''02'' for the second full calendar week, and so on. The final week of each year may include not more than 6 days of the following year. The third and fourth symbols must identify the year. Example: 3197 means the 31st week of 1997, or the week of August 3 through 9, 1997; 0198 means the first full calendar week of 1998, or the week of January 4 through 10, 1998. The symbols signifying the date of manufacture must be not less than 4 mm (5/32 inch) in height and shall immediately follow the optional descriptive code (paragraph (c) of this section). If no optional descriptive code is used, the symbols signifying the date of manufacture must be placed in the area shown in Figures 1 and 2 for the optional descriptive code.

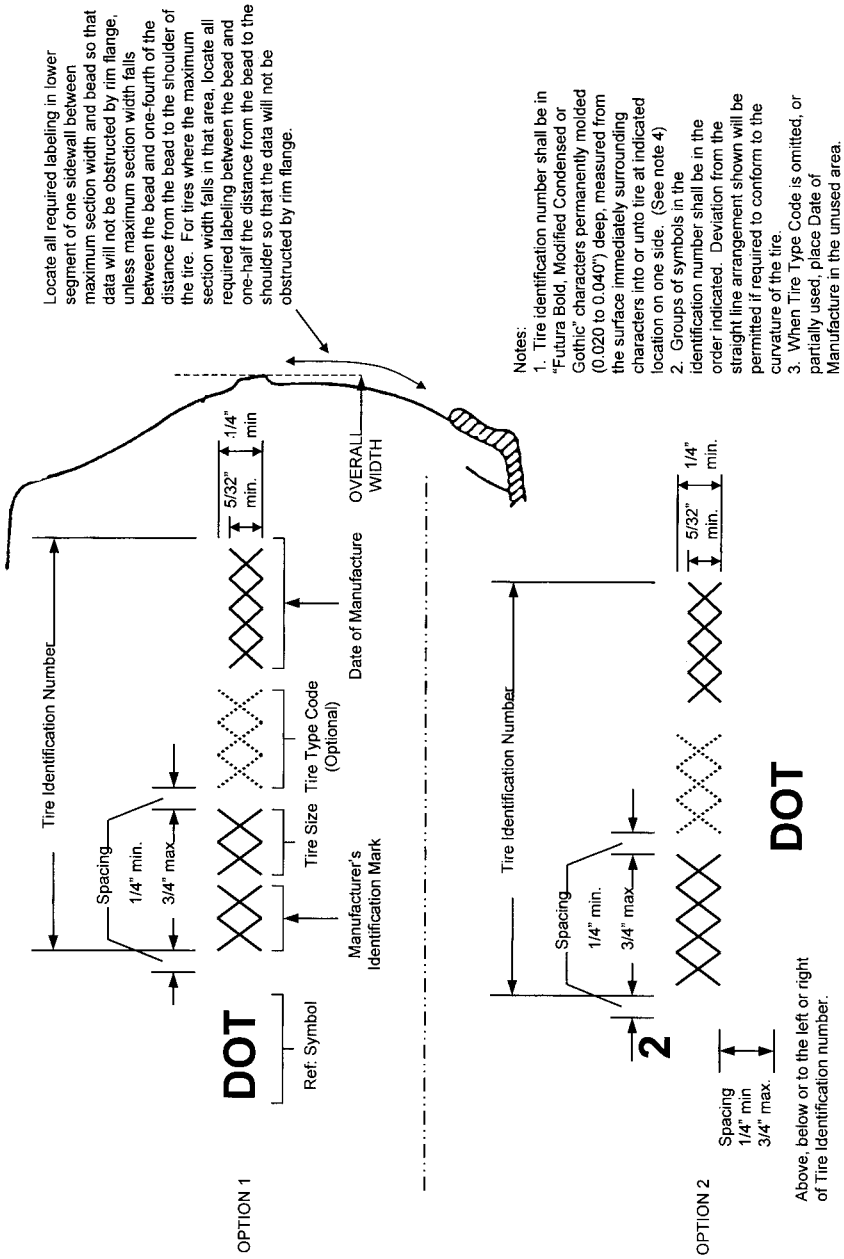

Notes:
1. Tire identification number shall be in "Futura Bold, Modified Condensed or Gothic" characters permanently molded (0.020 to 0.040") deep, measured from the surface immediately surrounding characters into or unto tire at indicated location on one side. (See note 4)
2. Groups of symbols in the identification number shall be in the order indicated. Deviation from the straight line arrangement shown will be permitted if required to conform to the curvature of the tire.
3. When Tire Type Code is omitted, or partially used, place Date of Manufacture in the unused area.
4. Other print type will be permitted if approved by the Administration.

FIGURE 1: IDENTIFICATION NUMBER FOR NEW TIRES

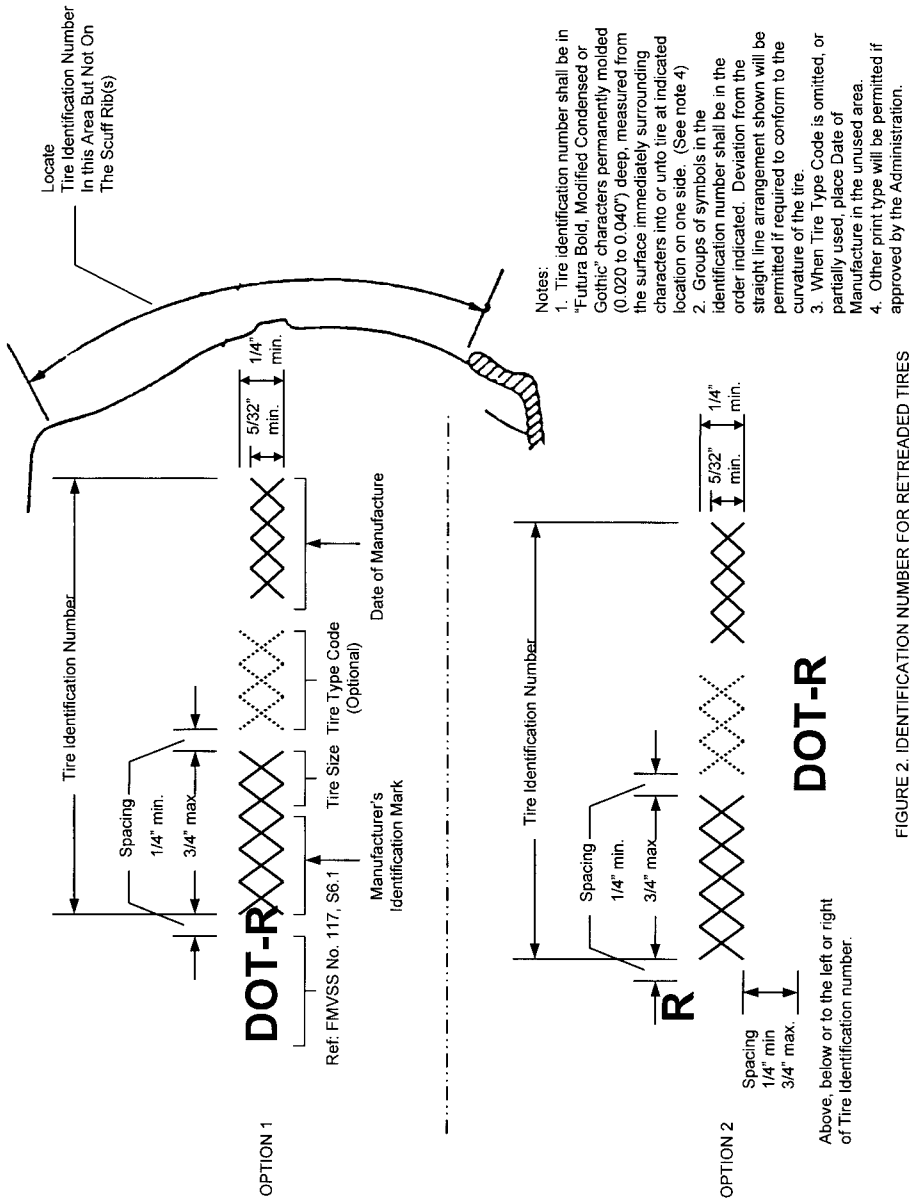

Notes:
1. Tire identification number shall be in "Futura Bold, Modified Condensed or Gothic" characters permanently molded (0.020 to 0.040") deep, measured from the surface immediately surrounding characters into or unto tire at indicated location on one side. (See note 4)
2. Groups of symbols in the identification number shall be in the order indicated. Deviation from the straight line arrangement shown will be permitted if required to conform to the curvature of the tire.
3. When Tire Type Code is omitted, or partially used, place Date of Manufacture in the unused area.
4. Other print type will be permitted if approved by the Administration.

FIGURE 2. IDENTIFICATION NUMBER FOR RETREADED TIRES

[36 FR 1197, Jan. 26, 1971, as amended at 36 FR 9870, May 23, 1971; 37 FR 23727, Nov. 8, 1972; 37 FR 25521, Dec. 1, 1972; 39 FR 5192, Feb. 11, 1974; 39 FR 12105, Apr. 3, 1974; 50 FR 2288, Jan. 16, 1985; 55 FR 29596, July 20, 1990; 64 FR 36812, July 8, 1999]

§ 574.6 Identification mark.

To obtain the identification mark required by 574.5(a), each manufacturer of new or retreaded pneumatic tires, non-pneumatic tires or non-pneumatic tire assemblies shall apply in writing to the Office of Vehicle Safety Compliance, National Highway Traffic Safety Administration, 400 Seventh Street SW., Washington, DC 20590, identify itself as a tire manufacturer or retreader and furnish the following information:

(a) The name, or other designation identifying the applicant, and its main office address.

(b) The name, or other identifying designation, of each individual plant operated by the manufacturer and the address of each plant, if applicable.

(c) The type of tires manufactured at each plant, e.g., pneumatic tires for passenger cars, buses, trucks or motorcycles; pneumatic retreaded tires; or non-pneumatic tires or non-pneumatic tire assemblies.

[55 FR 29596, July 20, 1990, as amended at 61 FR 29495, June 11, 1996]

§ 574.7 Information requirements—new tire manufacturers, new tire brand name owners.

(a)(1) Each new tire manufacturer and each new tire brand name owner (hereinafter referred to in this section and § 574.8 as ''tire manufacturer'') or its designee, shall provide tire registration forms to every distributor and dealer of its tires which offers new tires for sale or lease to tire purchasers.

(2) Each tire registration form provided to independent distributors and dealers pursuant to paragraph (a)(1) of this section shall contain space for recording the information specified in paragraphs (a)(4)(i) through (a)(4)(iii) of this section and shall conform in content and format to Figures 3a and 3b. Each form shall be:

(i) Rectangular;

(ii) Not less than 0.007 inches thick;

(iii) Greater than 3½ inches, but not greater than 4¼ inches wide; and

(iv) Greater than 5 inches, but not greater than 6 inches long.

(3) Each tire registration form provided to distributors and dealers that are not independent distributors or dealers pursuant to paragraph (a)(1) of this section shall be similar in format and size to Figure 4 and shall contain space for recording the information specified in paragraphs (a)(4)(i) through (a)(4)(iii) of this section.

(4)(i) Name and address of the tire purchaser.

(ii) Tire identification number.

(iii) Name and address of the tire seller or other means by which the tire manufacturer can identify the tire seller.

(b) Each tire manufacturer shall record and maintain, or have recorded and maintained for it by a designee, the information from registration forms which are submitted to it or its designee. No tire manufacturer shall use the information on the registration forms for any commercial purpose detrimental to tire distributors and dealers. Any tire manufacturer to which registration forms are mistakenly sent shall forward those registration forms to the proper tire manufacturer within 90 days of the receipt of the forms.

(c) Each tire manufacturer shall maintain, or have maintained for it by a designee, a record of each tire distributor and dealer that purchases tires directly from the manufacturer and sells them to tire purchasers, the number of tires purchased by each such distributor or dealer, the number of tires for which reports have been received from each such distributor or dealer other than an independent distributor or dealer, the number of tires for which reports have been received from each such independent distributor or dealer, the total number of tires for which registration forms have been submitted to the manufacturer or its designee, and the total number of tires sold by the manufacturer.

(d) The information that is specified in paragraph (a)(4) of this section and recorded on registration forms submitted to a tire manufacturer or its designee shall be maintained for a period of not less than five years from the date on which the information is

recorded by the manufacturer or its designee.

(Authority: Secs. 108, 119, and 201, Pub. L. 89–563, 80 Stat. 718 (15 U.S.C. 1392, 1407, and 1421); sec. 4, Pub. L. 97–311, 96 Stat. 1619 (15 U.S.C. 1418); and delegation of authority at 49 CFR 1.50)

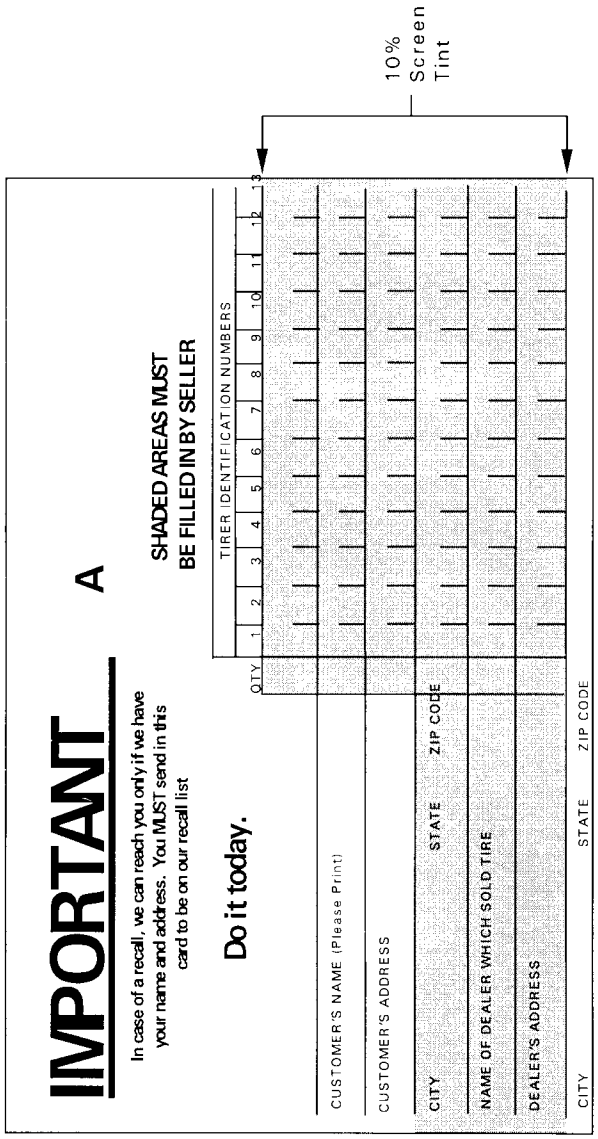

A- Preprinted tire manufacturer's name - unless the manufacturer's name appears on the reverse side of the form

Figure 3a - Registration form for independent distributors and dealers - tire identification number side

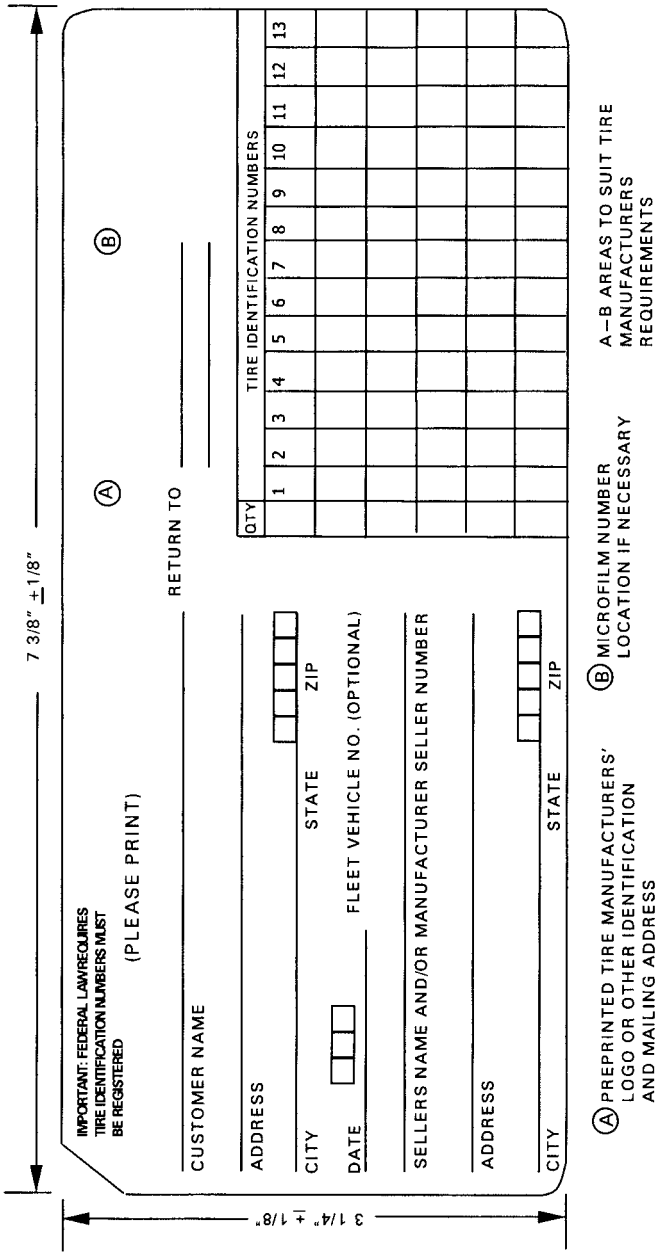

FIG 4 - UNIVERSAL FORMAT

[49 FR 4760, Feb. 8, 1984; 49 FR 5621, Feb. 14, 1984, as amended at 56 FR 49427, Sept. 30, 1991; 64 FR 36815, July 8, 1999; 67 FR 45872, July 10, 2002]

§ 574.8 Information requirements—tire distributors and dealers.

(a) *Independent distributors and dealers.* (1) Each independent distributor and each independent dealer selling or leasing new tires to tire purchasers or lessors (hereinafter referred to in this section as ''tire purchasers'') shall provide each tire purchaser at the time of sale or lease of the tire(s) with a tire registration form.

(2) The distributor or dealer may use either the registration forms provided by the tire manufacturers pursuant to § 574.7(a) or registration forms obtained from another source. Forms obtained from other sources shall comply with the requirements specified in § 574.7(a) for forms provided by tire manufacturers to independent distributors and dealers.

(3) Before giving the registration form to the tire purchaser, the distributor or dealer shall record in the appropriate spaces provided on that form:

(i) The entire tire identification number of the tire(s) sold or leased to the tire purchaser, and

(ii) The distributor's or dealer's name and address or other means of identification known to the tire manufacturer.

(4) Multiple tire purchases or leases by the same tire purchaser may be recorded on a single registration form.

(b) *Other distributors and dealers.* (1) Each distributor and each dealer, other than an independent distributor or dealer, selling new tires to tire purchasers shall submit the information specified in § 574.4(a)(4) to the manufacturer of the tires sold, or to its designee.

(2) Each tire distributor and each dealer, other than an independent distributor or dealer, shall submit registration forms containing the information specified in § 574.7(a)(4) to the tire manufacturer, or person maintaining the information, not less often than every 30 days. However, a distributor or dealer which sells less than 40 tires, of all makes, types and sizes during a 30-day period may wait until he or she sells a total of 40 new tires, but in no event longer than six months, before forwarding the tire information to the respective tire manufacturers or their designees.

(c) Each distributor and each dealer selling new tires to other tire distributors or dealers shall supply to the distributor or dealer a means to record the information specified in § 574.7(a)(4), unless such a means has been provided to that distributor or dealer by another person or by a manufacturer.

(d) Each distributor and each dealer shall immediately stop selling any group of tires when so directed by a notification issued pursuant to sections 151 and 152 of the Act (15 U.S.C. 1411 and 1412).

(Authority: Secs. 108, 119, and 201, Pub. L. 89–563, 80 Stat. 718 (15 U.S.C. 1392, 1407, and 1421); sec. 4, Pub. L. 97–311, 96 Stat. 1619 (15 U.S.C. 1418); and delegation of authority at 49 CFR 1.50)

[49 FR 4761, Feb. 8, 1984, as amended at 56 FR 49427, Sept. 30, 1991]

§ 574.9 Requirements for motor vehicle dealers.

(a) Each motor vehicle dealer who sells a used motor vehicle for purposes other than resale, who leases a motor vehicle for more than 60 days, that is equipped with new tires is considered, for purposes of this part, to be a tire dealer and shall meet the requirements specified in § 574.8.

(b) Each person selling a motor vehicle to first purchasers for purposes other than resale, that is equipped with new tires that were not on the motor vehicle when shipped by the vehicle manufacturer is considered a tire dealer for purposes of this part and shall meet the requirements specified in § 574.8.

(Authority: Secs. 103, 108, 112, 119, 201, Pub. L. 89–563, 80 Stat. 718 (15 U.S.C. 1392, 1397, 1401, 1407, 1421); secs. 102, 103, 104, Pub. L. 93–492, 88 Stat. 1470 (15 U.S.C. 1411–1420); 92 Stat. 2689 (15 U.S.C. 1418); delegation of authority at 49 CFR 1.51)

[44 FR 7964, Feb. 8, 1979]

§ 574.10 Requirements for motor vehicle manufacturers.

Each motor vehicle manufacturer, or his designee, shall maintain a record of the new tires on or in each vehicle shipped by him or a motor vehicle distributor or dealer, and shall maintain a

record of the name and address of the first purchaser for purposes other than resale of each vehicle equipped with such tires. These records shall be maintained for a period of not less than 5 years from the date of sale of the vehicle to the first purchaser for purposes other than resale.

(Authority: Secs. 103, 108, 112, 119, 201, Pub. L. 89–563, 80 Stat. 718 (15 U.S.C. 1392, 1397, 1401, 1407, 1421); secs. 102, 103, 104, Pub. L. 93–492, 88 Stat. 1470 (15 U.S.C. 1411–1420); 92 Stat. 2689 (15 U.S.C. 1418); delegation of authority at 49 CFR 1.51)

[44 FR 7964, Feb. 8, 1979, as amended at 67 FR 45872, July 10, 2002]

PART 575—CONSUMER INFORMATION REGULATIONS

Subpart A—General

Sec.
575.1 Scope.
575.2 Definitions.
575.3 Matter incorporated by reference.
575.4 Application.
575.5 Separability.
575.6 Requirements.
575.7 Special vehicles.

Subpart B—Consumer Information Items

575.101–575.102 [Reserved]
575.103 Truck-camper loading.
575.104 Uniform tire quality grading standards.
575.105 Vehicle rollover.

AUTHORITY: 49 U.S.C. 322, 30111, 30115, 30117, and 30166; delegation of authority at 49 CFR 1.50.

Subpart A—General

SOURCE: 35 FR 6867, Apr. 30, 1970, unless otherwise noted.

§ 575.1 Scope.

This part contains Federal Motor Vehicle Consumer Information Regulations established under section 112(d) of the National Traffic and Motor Vehicle Safety Act of 1966 (15 U.S.C. 1401(d)) (hereinafter ''the Act'').

§ 575.2 Definitions.

(a) *Statutory definitions.* All terms used in this part that are defined in section 102 of the Act are used as defined in the Act.

(b) *Motor Vehicle Safety Standard definitions.* Unless otherwise indicated, all terms used in this part that are defined in the Motor Vehicle Safety Standards, part 571 of this subchapter (hereinafter ''the Standards''), are used as defined in the Standards without regard to the applicability of a standard in which a definition is contained.

(c) *Definitions used in this part.*

Owner's manual means the document which contains the manufacturer's comprehensive vehicle operating and maintenance instructions, and which is intended to remain with the vehicle for the life of the vehicle.

Skid number means the frictional resistance measured in accordance with American Society for Testing and Materials Method E–274 at 40 miles per hour, omitting water delivery as specified in paragraph 7.1 of that Method.

[35 FR 6867, Apr. 30, 1970, as amended at 38 FR 5339, Feb. 28, 1973; 48 FR 44081, Sept. 27, 1983; 54 FR 48749, Nov. 27, 1989; 64 FR 27924, May 24, 1999]

§ 575.3 Matter incorporated by reference.

The incorporation by reference provisions of § 571.5 of this subchapter apply to this part.

§ 575.4 Application.

(a) *General.* Except as provided in paragraphs (b) through (d) of this section, each section set forth in subpart B of this part applies according to its terms to motor vehicles and tires manufactured after the effective date indicated.

(b) *Military vehicles.* This part does not apply to motor vehicles or tires sold directly to the Armed Forces of the the United States in conformity with contractual specifications.

(c) *Export.* This part does not apply to motor vehicles or tires intended solely for export and so labeled or tagged.

(d) *Import.* This part does not apply to motor vehicles or tires imported for purposes other than resale.

[39 FR 1039, Jan. 4, 1974]

§ 575.5 Separability.

If any section established in this part or its application to any person or circumstances is held invalid, the remainder of the part and the application of that section to other persons or circumstances is not affected thereby.

§ 575.6 Requirements.

(a)(1) At the time a motor vehicle is delivered to the first purchaser for purposes other than resale, the manufacturer of that vehicle shall provide the Uniform Tire Quality Grading information required by § 575.104(d)(1)(iii) in the owner's manual of each vehicle it produces. The vehicle manufacturer shall also provide to the purchaser, in writing and in the English language, the information specified in § 575.103 of this part that is applicable to that vehicle. The information provided with a vehicle may contain more than one table, but the document must either:

(i) Clearly and unconditionally indicate which of the tables apply to the vehicle with which it is provided, or

(ii) Contain a statement on its cover referring the reader to the vehicle certification label for specific information concerning which of the tables apply to that vehicle. If the manufacturer chooses option in paragraph (a)(1)(ii) of this section, the vehicle certification label shall include such specific information.

Example 1. Manufacturer X furnishes a document containing several tables that apply to various groups of vehicles that it produces. The document contains the following notation on its front page: ''The information that applies to this vehicle is contained in Table 5.'' That notation satisfies the requirement.

Example 2. Manufacturer Y furnishes a document containing several tables as in Example 1, with the following notation on its front page:

''Information applies as follows:
Model P. Regular cab, 135 in. (3,430 mm) wheel base—Table 1.
Model P. Club cab, 142 in. (3,607 mm) wheel base—Table 2.
Model Q—Table 3.''

This notation does not satisfy the requirement, since it is conditioned on the model or the equipment of the vehicle with which the document is furnished, and therefore additional information is required to select the proper table.

(2)(i) At the time a motor vehicle manufactured on or after September 1, 1990 is delivered to the first purchaser for purposes other than resale, the manufacturer shall provide to the purchaser, in writing in the English language and not less than 10 point type, the following statement in the owner's manual, or, if there is no owner's manual, on a one-page document:

If you believe that your vehicle has a defect which could cause a crash or could cause injury or death, you should immediately inform the National Highway Traffic Safety Administration (NHTSA) in addition to notifying [INSERT NAME OF MANUFACTURER].

If NHTSA receives similar complaints, it may open an investigation, and if it finds that a safety defect exists in a group of vehicles, it may order a recall and remedy campaign. However, NHTSA cannot become involved in individual problems between you, your dealer, or [INSERT NAME OF MANUFACTURER].

To contact NHTSA, you may either call the Auto Safety Hotline toll-free at 1–800–424–9393 (or 366–0123 in Washington, DC area) or write to: NHTSA, U.S. Department of Transportation, Washington, DC 20590. You can also obtain other information about motor vehicle safety from the Hotline.

(ii) The manufacturer shall specify in the table of contents of the owner's manual the location of the statement in 575.6(a)(2)(i). The heading in the table of contents shall state ''Reporting Safety Defects.''

(3) For vehicles manufactured prior to September 1, 2000, at the time a motor vehicle is delivered to the first purchaser for purposes other than resale, the manufacturer of that vehicle shall provide the purchaser, in writing and in the English language, the information specified in §§ 575.103 and 575.104 of this part that is applicable to that vehicle and its tires. The document provided with a vehicle may contain more than one table, but the document must either clearly and unconditionally indicate which of the tables apply to the vehicle with which it is provided, or contain a statement on its cover referring the reader to the vehicle certification label for specific information concerning which of the tables apply to that vehicle. If the manufacturer chooses option (a)(2) of this section, the vehicle certification label shall include such specific information.

Example 1. Manufacturer X furnishes a document containing several tables, which apply to various groups of vehicles that it produces. The document contains the following notation on its front page: ''The information that applies to this vehicle is contained in Table 5.'' The notation satisfies the requirement.

Example 2. Manufacturer Y furnishes a document containing several tables as in Example 1, with the following notation on its front page: Information applies as follows:

Model P, 6-cylinder engine—Table 1.

Model P, 8-cylinder engine—Table 2.

Model Q—Table 3.

This notation does not satisfy the requirement, since it is conditioned on the model or the equipment of the vehicle with which the document is furnished, and therefore additional information is required to select the proper table.

(b) At the time a motor vehicle tire is delivered to the first purchaser for a purpose other than resale, the manufacturer of that tire, or in the case of a tire marketed under a brand name, the brand name owner, shall provide to that purchaser the information specified in subpart B of this part that is applicable to that tire.

(c) Each manufacturer of motor vehicles, each brand name owner of tires, and each manufacturer of tires for which there is no brand name owner shall provide for examination by prospective purchasers, at each location where its vehicles or tires are offered for sale by a person with whom the manufacturer or brand name owner has a contractual, proprietary, or other legal relationship, or by a person who has such a relationship with a distributor of the manufacturer or brand name owner concerning the vehicle or tire in question, the information specified in subpart B of this part that is applicable to each of the vehicles or tires offered for sale at that location. The information shall be provided without charge and in sufficient quantity to be available for retention by prospective purchasers or sent by mail to a prospective purchaser upon his request. With respect to newly introduced vehicles or tires, the information shall be provided for examination by prospective purchasers not later than the day on which the manufacturer or brand name owner first authorizes those vehicles or tires to be put on general public display and sold to consumers.

(d)(1)(i) Except as provided in paragraph (d)(1)(ii) of this section, in the case of all sections of subpart B other than §575.104, as they apply to information submitted prior to new model introduction, each manufacturer of motor vehicles shall submit to the Administrator 2 copies of the information specified in subpart B of this part that is applicable to the vehicles offered for sale, at least 90 days before information on such vehicles is first provided for examination by prospective purchasers pursuant to paragraph (c) of this section.

(ii) Where an unforeseen preintroduction modification in vehicle design or equipment results in a change in vehicle performance for a characteristic included in subpart B of this part, a manufacturer of motor vehicles may revise information previously furnished under paragraph (d)(1)(i) of this section by submission to the Administrator of 2 copies of the revised information reflecting the performance changes, at least 30 days before information on such vehicles is first provided to prospective purchasers pursuant to paragraph (c) of this section.

(2)(i) In the case of §575.104, each brand name owner of tires, and each manufacturer of tires for which there is no brand name owner shall submit to the Administrator 2 copies of the information specified in Subpart B of this part that is applicable to the tires offered for sale, at least 30 days before it is first provided for examination by prospective purchasers pursuant to paragraph (c) of this section.

(ii) In the case of all other sections of Subpart B of this Part as they apply to post-introduction changes in information submitted for the current model year, each manufacturer of motor vehicles, each brand name owner of tires, and each manufacturer of tires for which there is no brand name owner shall submit to the Administrator 2 copies of the information specified in Subpart B of this part that is applicable to the vehicles or tires offered for sale, at least 30 days before it is first

provided for examination by prospective purchasers pursuant to paragraph (c) of this section.

[39 FR 1039, Jan. 4, 1974, as amended at 41 FR 13923, Apr. 1, 1976; 45 FR 47153, July 14, 1980; 47 FR 7258, Feb. 18, 1982; 52 FR 27810, July 24, 1987; 54 FR 48749, Nov. 27, 1989; 64 FR 27924, May 24, 1999]

§ 575.7 Special vehicles.

A manufacturer who produces vehicles having a configuration not available for purchase by the general public need not make available to ineligible purchasers, pursuant to § 575.6(c), the information for those vehicles specified in subpart B of this part, and shall identify those vehicles when furnishing the information required by § 575.6(d).

[40 FR 11727, Mar. 13, 1975]

Subpart B—Consumer Information Items

§§ 575.101–575.102 [Reserved]

§ 575.103 Truck-camper loading.

(a) *Scope*. This section requires manufacturers of slide-in campers to affix to each camper a label that contains information relating to identification and proper loading of the camper and to provide more detailed loading information in the owner's manual. This section also requires manufacturers of trucks that would accommodate slide-in campers to specify the cargo weight ratings and the longitudinal limits within which the center of gravity for the cargo weight rating should be located.

(b) *Purpose*. The purpose of this section is to provide information that can be used to reduce overloading and improper load placement in truck-camper combinations and unsafe truck- camper matching in order to prevent accidents resulting from the adverse effects of these conditions on vehicle steering and braking.

(c) *Application*. This section applies to slide-in campers and to trucks that are capable of accommodating slide- in campers.

(d) *Definitions*.

Camper means a structure designed to be mounted in the cargo area of a truck, or attached to an incomplete vehicle with motive power, for the purpose of providing shelter for persons.

Cargo Weight Rating means the value specified by the manufacturer as the cargo-carrying capacity, in pounds or kilograms, of a vehicle, exclusive of the weight of occupants in designated seating positions, computed as 68 kilograms or 150 pounds times the number of designated seating positions.

Slide-in Camper means a camper having a roof, floor, and sides, designed to be mounted on and removable from the cargo area of a truck by the user.

(e) *Requirements*—(1) *Slide-in Camper*—(i) *Labels*. Each slide-in camper shall have permanently affixed to it, in such a manner that it cannot be removed without defacing or destroying it, and in a plainly visible location on an exterior rear surface other than the roof, steps, or bumper extension, a label containing the following information in the English language lettered in block capitals and numerals not less than 2.4 millimeters (three thirty-seconds of an inch) high, of a color contrasting with the background, in the order shown below and in the form illustrated in Figure 1.

(A) *Name of camper manufacturer*. The full corporate or individual name of the actual assembler of the camper shall be spelled out, except that such abbreviations as ''Co.'' or ''Inc.'' and their foreign equivalents, and the first and middle initials of individuals may be used. The name of the manufacturer shall be preceded by the words ''Manufactured by'' or ''Mfd by.''

(B) *Month and year of manufacture*. It may be spelled out, such as ''June 1995'' or expressed in numerals, such as ''695.''

(C) The following statement completed as appropriate:

''Camper weight is _____ kg. (_____ lbs.) maximum when it contains standard equipment, _____ liters (_____ gal.) of water, _____ kg. (_____ lbs.) of bottled gas, and _____ cubic meters (_____ cubic ft.) refrigerator (or icebox with _____ kg. (_____ lbs.) of ice, as applicable). Consult owner's manual (or data sheet, as applicable) for weights of additional or optional equipment.''

(D) ''Liters (or gal.) of water'' refers to the volume of water necessary to fill the camper's fresh water tanks to capacity. ''Kg. (or lbs.) of bottled gas'' refers to the amount of gas necessary to fill the camper's bottled gas tanks to capacity. The statement regarding a ''refrigerator'' or ''icebox'' refers to the capacity of the refrigerator with which the vehicle is equipped or the weight of the ice with which the icebox may be filled. Any of these items may be omitted from the statement if the corresponding accessories are not included with the camper, provided that the omission is noted in the camper owner's manual as required in paragraph (e)(1)(ii) of this section.

(ii) *Owner's manual.* Each slide-in camper manufacturer shall provide with each camper a manual or other document containing the information specified in paragraph (e)(1)(ii) (A) through (F) of this section.

(A) The statement and information provided on the label as specified in paragraph (e)(1)(i) of this section. Instead of the information required by paragraphs (e)(1)(i)(B) of this section, a manufacturer may use the statements ''See camper identification label located (as applicable) for month and year of manufacture.'' If water, bottled gas, or refrigerator (icebox) has been omitted from this statement, the manufacturer's information shall note such omission and advise that the weight of any such item when added to the camper should be added to the maximum camper weight figure used in selecting an appropriate truck.

(B) A list of other additional or optional equipment that the camper is designed to carry, and the maximum weight of each if its weight is more than 9 kg. (20 lbs) when installed.

(C) The statement: ''To estimate the total cargo load that will be placed on a truck, add the weight of all passengers in the camper, the weight of supplies, tools, and all other cargo, the weight of installed additional or optional camper equipment, and the manufacturer's camper weight figure. Select a truck that has a cargo weight rating that is equal to or greater than the total cargo load of the camper and whose manufacturer recommends a cargo center of gravity zone that will contain the camper's center of gravity when it is installed.''

(D) The statements: ''When loading this camper, store heavy gear first, keeping it on or close to the camper floor. Place heavy things far enough forward to keep the loaded camper's center of gravity within the zone recommended by the truck manufacturer. Store only light objects on high shelves. Distribute weight to obtain even side-to-side balance of the loaded vehicle. Secure loose items to prevent weight shifts that could affect the balance of your vehicle. When the truck-camper is loaded, drive to a scale and weigh on the front and on the rear wheels separately to determine axle loads. The load on an axle should not exceed its gross axle weight rating (GAWR). The total of the axle loads should not exceed the gross vehicle weight rating (GVWR). These weight ratings are given on the vehicle certification label that is located on the left side of the vehicle, normally on the dash panel, hinge pillar, door latch post, or door edge next to the driver on trucks manufactured on or after January 1, 1972. If weight ratings are exceeded, move or remove items to bring all weights below the ratings.''

(E) A picture showing the location of the longitudinal center of gravity of the camper within an accuracy of 5 centimeters (2 inches) under the loaded condition specified in paragraph (e)(1)(i)(D) of this section in the manner illustrated in Figure 2.

(F) A picture showing the proper match of a truck and slide-in camper in the form illustrated in Figure 3.

(2) *Trucks.* (i) Except as provided in paragraph (e)(2)(ii) of this section, each manufacturer of a truck that is capable of accommodating a slide-in camper shall provide to the purchaser in the owner's manual or other document delivered with the truck, in writing and in the English language, the information specified in paragraphs (e)(2)(i) (A) through (E) of this section.

(A) A picture showing the manufacturer's recommended longitudinal center of gravity zone for the cargo weight rating in the form illustrated in Figure 4. The boundaries of the zone shall be such that when a slide-in camper equal in weight to the truck's cargo weight

rating is installed, no GAWR of the truck is exceeded.

(B) The truck's cargo weight rating.

(C) The statements: ''When the truck is used to carry a slide-in camper, the total cargo load of the truck consists of the manufacturer's camper weight figure, the weight of installed additional camper equipment not included in the manufacturer's camper weight figure, the weight of camper cargo, and the weight of passengers in the camper. The total cargo load should not exceed the truck's cargo weight rating and the camper's center of gravity should fall within the truck's recommended center of gravity zone when installed.''

(D) A picture showing the proper match of a truck and slide-in camper in the form illustrated in Figure 3.

(E) The statements: ''Secure loose items to prevent weight shifts that could affect the balance of your vehicle. When the truck camper is loaded, drive to a scale and weigh on the front and on the rear wheels separately to determine axle loads. Individual axle loads should not exceed either of the gross axle weight ratings (GAWR). The total of the axle loads should not exceed the gross vehicle weight rating (GVWR). These ratings are given on the vehicle certification label that is located on the left side of the vehicle, normally the dash, hinge pillar, door latch post, or door edge next to the driver. If weight ratings are exceeded, move or remove items to bring all weights below the ratings.''

(ii) If a truck would accommodate a slide-in camper but the manufacturer of the truck recommends that the truck not be used for that purpose, the information specified in paragraph (e)(2)(i)(E) of this section shall not be provided but instead the manufacturer shall provide a statement that the truck should not be used to carry a slide-in camper.

MFD. BY: (CAMPER MANUFACTURER'S NAME)

(MONTH AND YEAR OF MANUFACTURE)

CAMPER WEIGHT IS _____ KG (_____ LB) MAXIMUM WHEN IT CONTAINS STANDARD EQUIPMENT, _____ LITERS (_____ GAL) OF WATER, _____ KG (_____ LB) OF BOTTLED GAS, AND _____ CUBIC METERS (_____ CUBIC FT) REFRIGERATOR (OR ICEBOX WITH _____ KG (_____ LB) OF ICE, AS APPLICABLE). CONSULT OWNER'S MANUAL (OR DATA SHEET AS APPLICABLE) FOR WEIGHTS OF ADDITIONAL OR OPTIONAL EQUIPMENT.

FIGURE 1. LABEL FOR CAMPER

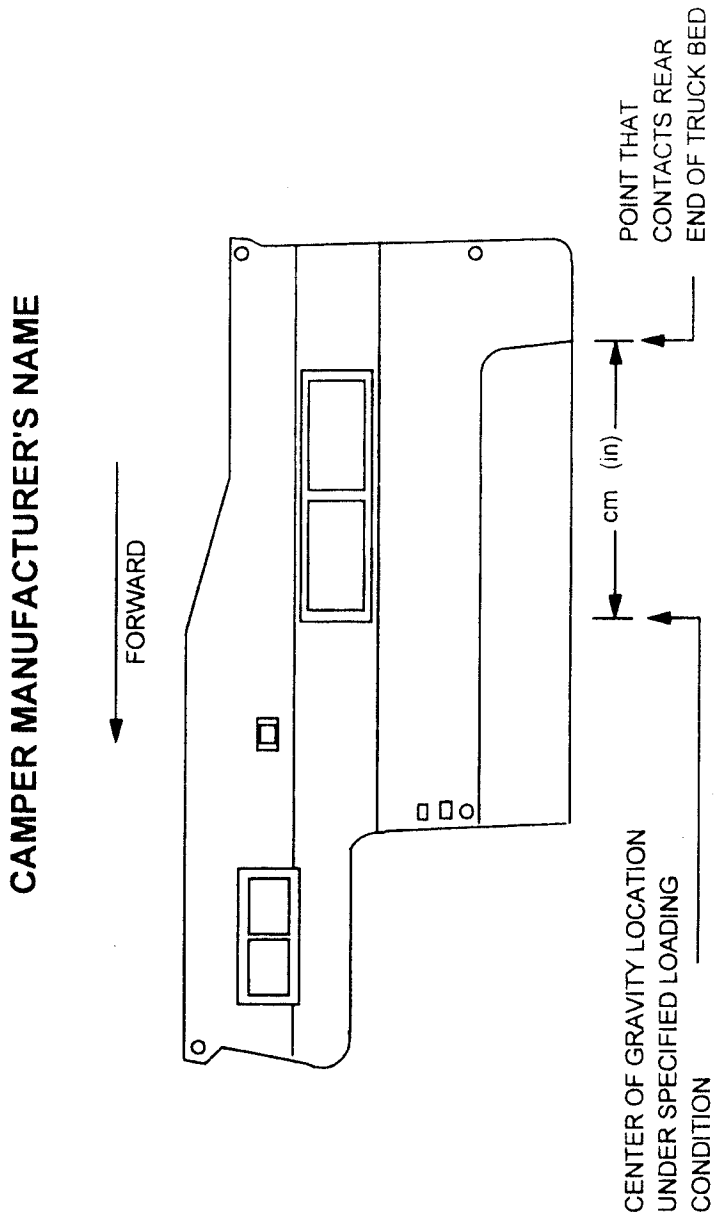

FGIURE 2. CAMPER CENTER OF GRAVITY INFORMATION

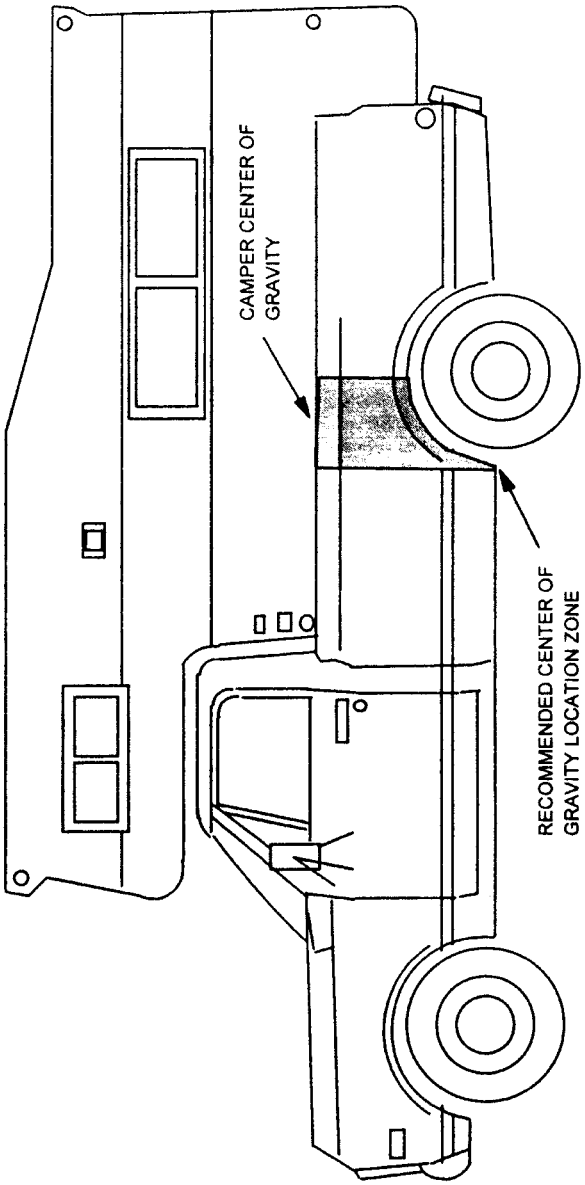

FIGURE 3. EXAMPLE OF PROPER TRUCK AND CAMPER MATCH

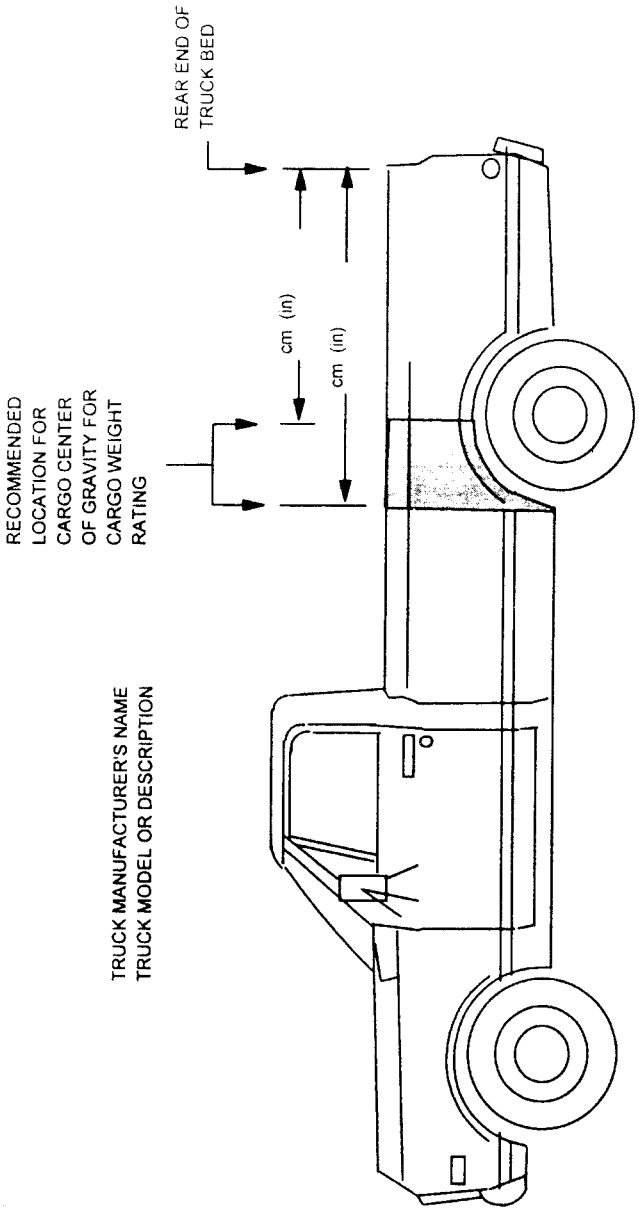

FIGURE 4. TRUCK LOADING INFORMATION

[61 FR 36657, July 12, 1996]

§575.104 Uniform tire quality grading standards.

(a) *Scope*. This section requires motor vehicle and tire manufacturers and tire brand name owners to provide information indicating the relative performance of passenger car tires in the areas

of treadwear, traction, and temperature resistance.

(b) *Purpose*. The purpose of this section is to aid the consumer in making an informed choice in the purchase of passenger car tires.

(c) *Application*. (1) This section applies to new pneumatic tires for use on passenger cars. However, this section does not apply to deep tread, winter-type snow tires, space-saver or temporary use spare tires, tires with nominal rim diameters of 12 inches or less, or to limited production tires as defined in paragraph (c)(2) of this section.

(2) ''Limited production tire'' means a tire meeting all of the following criteria, as applicable:

(i) The annual domestic production or importation into the United States by the tire's manufacturer of tires of the same design and size as the tire does not exceed 15,000 tires;

(ii) In the case of a tire marketed under a brand name, the annual domestic purchase or importation into the United States by a brand name owner of tires of the same design and size as the tire does not exceed 15,000 tires;

(iii) The tire's size was not listed as a vehicle manufacturer's recommended tire size designation for a new motor vehicle produced in or imported into the United States in quantities greater than 10,000 during the calendar year preceeding the year of the tire's manufacture; and

(iv) The total annual domestic production or importation into the United States by the tire's manufacturer, and in the case of a tire marketed under a brand name, the total annual domestic purchase or purchase for importation into the United States by the tire's brand name owner, of tires meeting the criteria of paragraphs (c)(2) (i), (ii), and (iii) of this section, does not exceed 35,000 tires.

Tire design is the combination of general structural characteristics, materials, and tread pattern, but does include cosmetic, identifying or other minor variations among tires.

(d) *Requirements*—(1) *Information*. (i) Each manufacturer of tires, or in the case of tires marketed under a brand name, each brand name owner, shall provide grading information for each tire of which he is the manufacturer or brand name owner in the manner set forth in paragraphs (d)(1)(i) (A) and (B) of this section. The grades for each tire shall be only those specified in paragraph (d)(2) of this section. Each tire shall be able to achieve the level of performance represented by each grade with which it is labeled. An individual tire need not, however, meet further requirements after having been subjected to the test for any one grade.

(A) Except for a tire of a new tire line, manufactured within the first six months of production of the tire line, each tire shall be graded with the words, letters, symbols, and figures specified in paragraph (d)(2) of this section, permanently molded into or onto the tire sidewall between the tire's maximum section width and shoulder in accordance with one of the methods described in Figure 1. For purposes of this paragraph, new tire line shall mean a group of tires differing substantially in construction, materials, or design from those previously sold by the manufacturer or brand name owner of the tires. As used in this paragraph, the term ''construction'' refers to the internal structure of the tire (e.g., cord angles, number and placement of breakers), ''materials'' refers to the substances used in manufacture of the tire (e.g., belt fiber, rubber compound), and ''design'' refers to properties or conditions imposed by the tire mold (e.g., aspect ratio, tread pattern).

(B) Each tire manufactured on and after the effective date of these amendments, other than a tire sold as original equipment on a new vehicle, shall have affixed to its tread surface so as not to be easily removable a label or labels containing its grades and other information in the form illustrated in Figure 2, Parts I and II. The treadwear grade attributed to the tire shall be either imprinted or indelibly stamped on the label containing the material in Part I of Figure 2, directly to the right of or below the word ''TREADWEAR.'' The traction grade attributed to the tire shall be indelibly circled in an array of the potential grade letters AA, A, B, or C, directly to the right of or below the word ''TRACTION'' in Part I of Figure 2. The temperature resistance

grade attributed to the tire shall be indelibly circled in an array of the potential grade letters A, B, or C, directly to the right of or below the word ''TEMPERATURE'' in Part I of Figure 2. The words ''TREADWEAR,'' ''TRACTION,'' AND ''TEMPERATURE,'' in that order, may be laid out vertically or horizontally. The text of Part II of Figure 2 may be printed in capital letters. The text of Part I and the text of Part II of Figure 2 need not appear on the same label, but the edges of the two texts must be positioned on the tire tread so as to be separated by a distance of no more than one inch. If the text of Part I and the text of Part II of Figure 2 are placed on separate labels, the notation ''See EXPLANATION OF DOT QUALITY GRADES'' shall be added to the bottom of the Part I text, and the words ''EXPLANATION OF DOT QUALITY GRADES'' shall appear at the top of the Part II text. The text of Figure 2 shall be oriented on the tire tread surface with lines of type running perpendicular to the tread circumference. If a label bearing a tire size designation is attached to the tire tread surface and the tire size designation is oriented with lines type running perpendicular to the tread circumference, the text of Figure 2 shall read in the same direction as the tire size designation.

(ii) In the case of the information required by §575.6(c) to be furnished to prospective purchasers of tires, each tire manufacturer or brand name owner shall, as part of that information, list all possible grades for traction and temperature resistance, and restate verbatim the explanation for each performance area specified in Figure 2. The information need not be in the same format as in Figure 2. The information must indicate clearly and unambiguously the grade in each performance area for each tire of that manufacturer or brand name owner offered for sale at the particular location.

(iii) Each manufacturer of motor vehicles equipped with passenger car tires shall include in the owner's manual of each such vehicle a list of all possible grades for traction and temperature resistance and restate verbatim the explanation for each performance area specified in Figure 2, Part II. The information need not be in the exact format of Figure 2, Part II, but it must contain a statement referring the reader to the tire sidewall for the specific tire grades for the tires with which the vehicle is equipped, as follows:

UNIFORM TIRE QUALITY GRADING

Quality grades can be found where applicable on the tire sidewall between tread shoulder and maximum section width. For example:

TREADWEAR 200 TRACTION AA
TEMPERATURE A

(iv) In the case of information required in accordance with §575.6(a) to be furnished to the first purchaser of a new motor vehicle, each manufacturer of motor vehicles shall, as part of the required information, list all possible grades for traction and temperature resistance and restate verbatim the explanation for each performance area specified in Figure 2 to this section. The information need not be in the format of Figure 2 to this section, but it must contain a statement referring the reader to the tire sidewall for the specific tire grades for the tires with which the vehicle is equipped.

(2) *Performance*—(i) *Treadwear*. Each tire shall be graded for treadwear performance with the word ''TREADWEAR'' followed by a number of two or three digits representing the tire's grade for treadwear, expressed as a percentage of the NHTSA nominal treadwear value, when tested in accordance with the conditions and procedures specified in paragraph (e) of this section. Treadwear grades shall be expressed in multiples of 20 (for example, 80, 120, 160).

(ii) *Traction*. Each tire shall be graded for traction performance with the word ''TRACTION,'' followed by the symbols AA, A, B, or C, when the tire is tested in accordance with the conditions and procedures specified in paragraph (f) of this section.

(A) The tire shall be graded C when the adjusted traction coefficient is either:

(*1*) 0.38 or less when tested in accordance with paragraph (f)(2) of this section on the asphalt surface specified in paragraph (f)(1)(i) of this section, or

(*2*) 0.26 or less when tested in accordance with paragraph (f)(2) of this section on the concrete surface specified in paragraph (f)(1)(i) of this section.

(B) The tire may be graded B only when its adjusted traction coefficient is both:

(*1*) More than 0.38 when tested in accordance with paragraph (f)(2) of this section on the asphalt surface specified in paragraph (f)(1)(i) of this section, and

(*2*) More than 0.26 when tested in accordance with paragraph (f)(2) of this section on the concrete surface specified in paragraph (f)(1)(i) of this section.

(C) The tire may be graded A only when its adjusted traction coefficient is both:

(*1*) More than 0.47 when tested in accordance with paragraph (f)(2) of this section on the asphalt surface specified in paragraph (f)(1)(i) of this section, and

(*2*) More than 0.35 when tested in accordance with paragraph (f)(2) of this section on the concrete surface specified in paragraph (f)(1)(i) of this section.

(D) The tire may be graded AA only when its adjusted traction coefficient is both:

(*1*) More than 0.54μ when tested in accordance with paragraph (f)(2) of this section on the asphalt surface specified in paragraph (f)(1)(i) of this section; and

(*2*) More than 0.38μ when tested in accordance with paragraph (f)(2) of this section on the concrete surface specified in paragraph (f)(1)(i) of this section.

(iii) *Temperature resistance*. Each tire shall be graded for temperature resistance performance with the word ''TEMPERATURE'' followed by the letter A, B, or C, based on its performance when the tire is tested in accordance with the procedures specified in paragraph (g) of this section. A tire shall be considered to have successfully completed a test stage in accordance with this paragraph if, at the end of the test stage, it exhibits no visual evidence of tread, sidewall, ply, cord, innerliner, or bead separation, chunking, broken cords, cracking or open splices as defined in § 571.109 of this chapter, and the tire pressure is not less than the pressure specified in paragraph (g)(1) of this section.

(A) The tire shall be graded C if it fails to complete the 500 rpm test stage specified in paragraph (g)(9) of this section.

(B) The tire may be graded B only if it successfully completes the 500 rpm test stage specified in paragraph (g)(9) of this section.

(C) The tire may be graded A only if it successfully completes the 575 rpm test stage specified in paragraph (g)(9) of this section.

(e) *Treadwear grading conditions and procedures*—(1) *Conditions*. (i) Tire treadwear performance is evaluated on a specific roadway course approximately 400 miles in length, which is established by the NHTSA both for its own compliance testing and for that of regulated persons. The course is designed to produce treadwear rates that are generally representative of those encountered by tires in public use. The course and driving procedures are described in appendix A of this section.

(ii) Treadwear grades are evaluated by first measuring the performance of a candidate tire on the government test course, and then correcting the projected mileages obtained to account for environmental variations on the basis of the performance of the course monitoring tires run in the same convoy.

(iii) In convoy tests, each vehicle in the same convoy, except for the lead vehicle, is throughout the test within human eye range of the vehicle immediately ahead of it.

(iv) A test convoy consists of two or four passenger cars, each having only rear-wheel drive.

(v) On each convoy vehicle, all tires are mounted on identical rims of design or measuring rim width specified for tires of that size in accordance with 49 CFR 571.109, S4.4.1 (a) or (b), or a rim having a width within −0 to +0.50 inches of the width listed.

(2) *Treadwear grading procedure*. (i) Equip a convoy as follows: Place four course monitoring tires on one vehicle.

Place four candidate tires with identical size designations on each other vehicle in the convoy. On each axle, place tires that are identical with respect to manufacturer and line.

(ii) Inflate each candidate and each course monitoring tire to the applicable pressure specified in Table 1 of this section.

(iii) Load each vehicle so that the load on each course monitoring and candidate tire is 85 percent of the test load specified in §575.104(h).

(iv) Adjust wheel alignment to the midpoint of the vehicle manufacturer's specifications, unless adjustment to the midpoint is not recommended by the manufacturer; in that case, adjust the alignment to the manufacturer's recommended setting. In all cases, the setting is within the tolerance specified by the manufacturer of the alignment machine.

(v) Subject candidate and course monitoring tires to ''break-in'' by running the tires in the convoy for two circuits of the test roadway (800 miles). At the end of the first circuit, rotate each vehicle's tires by moving each front tire to the same side of the rear axle and each rear tire to the opposite side of the front axle. Visually inspect each tire for any indication of abnormal wear, tread separation, bulging of the sidewall, or any sign of tire failure. Void the grading results from any tire with any of these anomalies, and replace the tire.

(vi) After break-in, allow the air pressure in the tires to fall to the applicable pressure specified in Table 1 of this section or for 2 hours, whichever occurs first. Measure, to the nearest 0.001 inch, the tread depth of each candidate and each course monitoring tire, avoiding treadwear indicators, at six equally spaced points in each groove. For each tire compute the average of the measurements. Do not measure those shoulder grooves which are not provided with treadwear indicators.

(vii) Adjust wheel alignment to the midpoint of the manufacturer's specifications, unless adjustment to the midpoint is not recommended by the manufacturer; in that case, adjust the alignment according to the manufacturer's recommended setting. In all cases, the setting is within the tolerance specified by the manufacturer of the alignment machine.

(viii) Drive the convoy on the test roadway for 6,400 miles.

(A) After each 400 miles, rotate each vehicle's tires by moving each front tire to the same side of the rear axle and each rear tire to the opposite side of the front axle. Visually inspect each tire for treadwear anomalies.

(B) After each 800 miles, rotate the vehicles in the convoy by moving the last vehicle to the lead position. Do not rotate driver positions within the convoy. In four-car convoys, vehicle one shall become vehicle two, vehicle two shall become vehicle three, vehicle three shall become vehicle four, and vehicle four shall become vehicle one.

(C) After each 800 miles, if necessary, adjust wheel alignment to the midpoint of the vehicle manufacturer's specification, unless adjustment to the midpoint is not recommended by the manufacturer; in that case, adjust the alignment to the manufacturer's recommended setting. In all cases, the setting is within the tolerance specified by the manufacturer of the alignment machine.

(D) After each 800 miles, if determining the projected mileage by the 9-point method set forth in (e)(2)(ix)(A)(1), measure the average tread depth of each tire following the procedure set forth in paragraph (e)(2)(vi) of this section.

(E) After each 1,600 miles, move the complete set of four tires to the following vehicle. Move the tires on the last vehicle to the lead vehicle. In moving the tires, rotate them as set forth in (e)(2)(viii)(A) of this section.

(F) At the end of the test, measure the tread depth of each tire pursuant to the procedure set forth in paragraph (e)(2)(vi) of this section.

(ix)(A) Determine the projected mileage for each candidate tire either by the nine-point method of least squares set forth in paragraph (e)(2)(ix)(A)(*1*) of this section and appendix C to this section, or by the two-point arithmetical method set forth in paragraph (e)(2)(ix)(A)(*2*) of this section. Notify NHTSA about which of the alternative grading methods is being used.

(*1*) *Nine-Point Method of Least Squares.* For each course monitoring and candidate tire in the convoy, using the average tread depth measurements obtained in accordance with paragraphs (e)(2)(vi) and (e)(2)(viii)(D) of this section and the corresponding mileages as data points, apply the method of least squares as described in appendix C to this section to determine the estimated regression line of y on x given by the following formula:

$$y = a + \frac{bx}{1000}$$

Where:
y = average tread depth in mils
x = miles after break-in,
a = y intercept of regression line (reference tread depth) in mils, calculated using the method of least squares; and
b = the slope of the regression line in mils of tread depth per 1,000 miles, calculated using the method of least squares. This slope will be negative in value. The tire's wear rate is defined as the absolute value of the slope of the regression line.

(*2*) *Two-Point Arithmetical Method.* For each course monitoring and candidate tire in the convoy, using the average tread depth measurements obtained in accordance with paragraph (e)(2)(vi) and (e)(2)(viii)(F) of this section and the corresponding mileages as data points, determine the slope (m) of the tire's wear in mils of tread depth per 1,000 miles by the following formula:

$$m = 1000\frac{(Y1 - Yo)}{(X1 - Xo)}$$

Where:
Yo = average tread depth after break-in, mils
Y1 = average tread depth at 6,400 miles, mils
Xo = 0 miles (after break-in).
X1 = 6,400 miles of travel

This slope (m) will be negative in value. The tire's wear rate is defined as the slope (m) expressed in mils per 1,000 miles.

(B) Average the wear rates of the four course monitoring tires as determined in accordance with paragraph (e)(2)(ix)(A) of this section.

(C) Determine the course severity adjustment factor by dividing the base course wear rate for the course monitoring tires (see *Note* to this paragraph) by the average wear rate for the four course monitoring tires.

NOTE TO PARAGRAPH (e)(2)(ix)(C): The base wear rate for the course monitoring tires will be obtained by the government by running ASTM E–1136 course monitoring tires for 6,400 miles over the San Angelo, Texas, UTQGS test route 4 times per year, then using the average wear rate from the last 4 quarterly CMT tests for the base course wear rate calculation. Each new base course wear rate will be filed in the DOT Docket Management section. This value will be furnished to the tester by the government at the time of the test. The course monitoring tires used in a test convoy must be no more than one year old at the commencement of the test and must be used within two months after removal from storage.

(D) Determine the adjusted wear rate for each candidate tire by multiplying its wear rate determined in accordance with paragraph (e)(2)(ix)(A) of this section by the course severity adjustment factor determined in accordance with paragraph (e)(2)(ix)(C) of this section.

(E) Determine the projected mileage for each candidate tire by applying the appropriate formula set forth below:

(*1*) If the projected mileage is calculated pursuant to paragraph (e)(2)(ix)(A)(*1*) of this section, then:

$$\text{Projected mileage} = \frac{1000(a - 62)}{b^1} + 800$$

Where:
a = y intercept of regression line (reference tread depth) for the candidate tire as determined in accordance with paragraph (e)(2)(ix)(A)(*1*) of this section.
b^1 = the adjusted wear rate for the candidate tire as determined in accordance with paragraph (e)(2)(ix)(D) of this section.

(*2*) If the projected mileage is calculated pursuant to (e)(2)(ix)(a)(*2*) of this section, then:

$$\text{Projected mileage} = \frac{-1000(Yo - 62)}{mc} + 800$$

Where:
Yo = average tread depth after break-in, mils
mc = the adjusted wear rate for the candidate tires as determined in accordance with paragraph (e)(2)(ix)(D) of this section.

(F) Compute the grade (P) of the NHTSA nominal treadwear value for each candidate tire by using the following formula:

P = Projected mileage × base course wear $rate_n$/402

Where base course wear $rate_n$ = new base course wear rate, *i.e.*, average treadwear of the last 4 quarterly course monitoring tire tests conducted by NHTSA.

Round off the percentage to the nearest lower 20-point increment.

(f) *Traction grading conditions and procedures*—(1) *Conditions*. (i) Tire traction performance is evaluated on skid pads that are established, and whose severity is monitored, by the NHTSA both for its compliance testing and for that of regulated persons. The test pavements are asphalt and concrete surfaces constructed in accordance with the specifications for pads ''C'' and ''A'' in the ''Manual for the Construction and Maintenance of Skid Surfaces,'' National Technical Information Service No. DOT–HS–800–814. The surfaces have locked wheel traction coefficients when evaluated in accordance with paragraphs (f)(2)(i) through (f)(2)(vii) of this section of 0.50±0.10 for the asphalt and 0.35±0.10 for the concrete. The location of the skid pads is described in appendix B to this section.

(ii) The standard tire is the American Society for Testing and Materials (ASTM) E 501 ''Standard Tire for Pavement Skid Resistance Tests.''

(iii) The pavement surface is wetted in accordance with paragraph 3.5, ''Pavement Wetting System,'' of ASTM Method E 274–79, ''Skid Resistance of Paved Surfaces Using a Full-Scale Tire.''

(iv) The test apparatus is a test trailer built in conformity with the specifications in paragraph 3, ''Apparatus,'' of ASTM Method E 274–79, and instrumented in accordance with paragraph 3.3.2 of that method, except that ''wheel load'' in paragraph 3.2.2 and tire and rim specifications in paragraph 3.2.3 of that method are as specified in the procedures in paragraph (f)(2) of this section for standard and candidate tires.

(v) The test apparatus is calibrated in accordance with ASTM Method F 377–74, ''Standard Method for Calibration of Braking Force for Testing of Pneumatic Tires'' with the trailer's tires inflated to 24 psi and loaded to 1,085 pounds.

(vi) Consecutive tests on the same surface are conducted not less than 30 seconds apart.

(vii) A standard tire is discarded in accordance with ASTM Method E 501.

(2) *Procedure*. (i) Prepare two standard tires as follows:

(A) Condition the tires by running them for 200 miles on a pavement surface.

(B) Mount each tire on a rim of design or measuring rim width specified for tires of its size in accordance with 49 CFR 571.109, S4.4.1 (a) or (b), or a rim having a width within −0 to +0.50 inches of the width listed. Then inflate the tire to 24 psi, or, in the case of a tire with inflation pressure measured in kilopascals, to 180 kPa.

(C) Statically balance each tire-rim combination.

(D) Allow each tire to cool to ambient temperature and readjust its inflation pressure to 24 psi, or, in the case of a tire with inflation pressure measured in kilopascals, to 180 kPa.

(ii) Mount the tires on the test apparatus described in paragraph (f)(1)(iv) of this section and load each tire to 1,085 pounds.

(iii) Tow the trailer on the asphalt test surface specified in paragraph (f)(1)(i) of this section at a speed of 40 mph, lock one trailer wheel, and record the locked-wheel traction coefficient on the tire associated with that wheel between 0.5 and 1.5 seconds after lock-up.

(iv) Repeat the test on the concrete surface, locking the same wheel.

(v) Repeat the tests specified in paragraphs (f)(2) (iii) and (iv) of this section for a total of 10 measurements on each test surface.

(vi) Repeat the procedures specified in paragraphs (f)(2) (iii) through (v) of this section, locking the wheel associated with the other tire.

(vii) Average the 20 measurements taken on the asphalt surface to find the standard tire traction coefficient for the asphalt surface. Average the 20 measurements taken on the concrete surface to find the standard tire traction coefficient for the concrete surface. The standard tire traction coefficient so determined may be used in the

computation of adjusted traction coefficients for more than one candidate tire.

(viii) Prepare two candidate tires of the same construction type, manufacturer, line, and size designation in accordance with paragraph (f)(2)(i) of this section, mount them on the test apparatus, and test one of them according to the procedures of paragraph (f)(2)(ii) through (v) of this section, except load each tire to 85% of the test load specified in § 575.104(h). For CT tires, the test inflation of candidate tires shall be 230 kPa. Candidate tire measurements may be taken either before or after the standard tire measurements used to compute the standard tire traction coefficient. Take all standard tire and candidate tire measurements used in computation of a candidate tire's adjusted traction coefficient within a single three hour period. Average the 10 measurements taken on the asphalt surface to find the candidate tire traction coefficient for the asphalt surface. Average the 10 measurements taken on the concrete surface to find the candidate tire traction coefficient for the concrete surface.

(ix) Compute a candidate tire's adjusted traction coefficient for asphalt (μ**a**) by the following formula:

(μ**a**) = Measured candidate tire coefficient for asphalt + 0.50

− Measured standard tire coefficient for asphalt

(x) Compute a candidate tire's adjusted traction coefficient for concrete (μ_c) by the following formula:

μ_c=Measured candidate tire coefficient for concrete +0.35

μMeasured standard tire coefficient for concrete

(g) *Temperature resistance grading.*

(1) Mount the tire on a rim of design or measuring rim width specified for tires of its size in accordance with § 571.109, paragraph S4.4.1 (a) or (b) and inflate it to the applicable pressure specified in Table 1 of this section.

(2) Condition the tire-rim assembly to a temperature of 95 °F for at least 3 hours.

(3) Adjust the pressure again to the applicable pressure specified in Table 1 of this section.

(4) Mount the tire-rim assembly on an axle, and press the tire tread against the surface of a flat-faced steel test wheel that is 67.23 inches in diameter and at least as wide as the section width of the tire.

(5) During the test, including the pressure measurements specified in paragraphs (g) (1) and (3) of this section, maintain the temperature of the ambient air, as measured 12 inches from the edge of the rim flange at any point on the circumference on either side of the tire at 95 °F. Locate the temperature sensor so that its readings are not affected by heat radiation, drafts, variations in the temperature of the surrounding air, or guards or other devices.

(6) Press the tire against the test wheel with a load of 88 percent of the tire's maximum load rating as marked on the tire sidewall.

(7) Rotate the test wheel at 250 rpm for 2 hours.

(8) Remove the load, allow the tire to cool to 95 °F or for 2 hours, whichever occurs last, and readjust the inflation pressure to the applicable pressure specified in Table 1 of this section.

(9) Reapply the load and without interruption or readjustment of inflation pressure, rotate the test wheel at 375 rpm for 30 minutes, and then at successively higher rates in 25 rpm increments, each for 30 minutes, until the tire has run at 575 rpm for 30 minutes, or to failure, whichever occurs first.

TABLE I.—TEST INFLATION PRESSURES

[Maximum permissible inflation pressure for the following test]

Test type	Tires other than CT tires									CT tires			
	psi				kPa					kPa			
	32	36	40	60	240	280	300	340	350	290	330	350	390
Treadwear test	24	28	32	52	180	220	180	220	180	230	270	230	270
Temperature resistant test	30	34	38	58	220	260	220	260	220	270	310	270	310

(h) *Determination of test load.* (1) To determine test loads for purposes of paragraphs (e)(2)(iii) and (f)(2)(viii), follow the procedure set forth in paragraphs (h) (2) through (5) of this section.

(2) Determine the tire's maximum inflation pressure and maximum load rating both as specified on the tire's sidewall.

(3) Determine the appropriate multiplier corresponding to the tire's maximum inflation pressure, as set forth in Table 2.

(4) Multiply the tire's maximum load rating by the multiplier determined in paragraph (h)(3). This is the tire's calculated load.

(5) Round the product determined in paragraph (h)(4) (the calculated load) to the nearest multiple of ten pounds or, if metric units are used, 5 kilograms. For example, 903 pounds would be rounded to 900 and 533 kilograms would be rounded to 535. This figure is the test load.

TABLE 2

Maximum inflation pressure	Multiplier to be used for treadwear testing	Multiplier to be used for traction testing
Tires other than CT tires		
32 psi	.851	.851
36 psi	.870	.797
40 psi	.883	.753
240 kPa	.866	.866
280 kPa	.887	.804
300 kPa	.866	.866
340 kPa	.887	.804
350 kPa	.866	.866
CT tires		
290 kPa	.866	.866
330 kPa	.887	.804
305 kPa	.866	.866
390 kPa	.887	.804

TABLE 2A

Tire size designation	Temp resistance			Traction	Treadwear		
	Max pressure				Max pressure		
	32	36	40		32	36	40
145/70 R13	615	650	685	523	523	553	582
155/70 R13	705	740	780	599	599	629	663
165/70 R13	795	835	880	676	676	710	748
175/70 R13	890	935	980	757	757	795	833
185/70 R13	990	1040	1090	842	842	884	926
195/70 R13	1100	1155	1210	935	935	982	1029
155/70 R14	740	780	815	629	629	663	693
175/70 R14	925	975	1025	786	786	829	871
185/70 R14	1045	1100	1155	888	888	935	982
195/70 R14	1155	1220	1280	982	982	1037	1088
155/70 R15	770	810	850	655	655	689	723
175/70 R15	990	1040	1090	842	842	884	927
185/70 R15	1100	1155	1210	935	935	982	1029
5.60–13	725	810	880	616	616	689	748
5.20–14	695	785	855	591	591	667	727
165–15	915	1,015	1,105	779	779	863	939
185/60 R 13	845	915	980	719	719	778	833

(i)–(l) [Reserved]

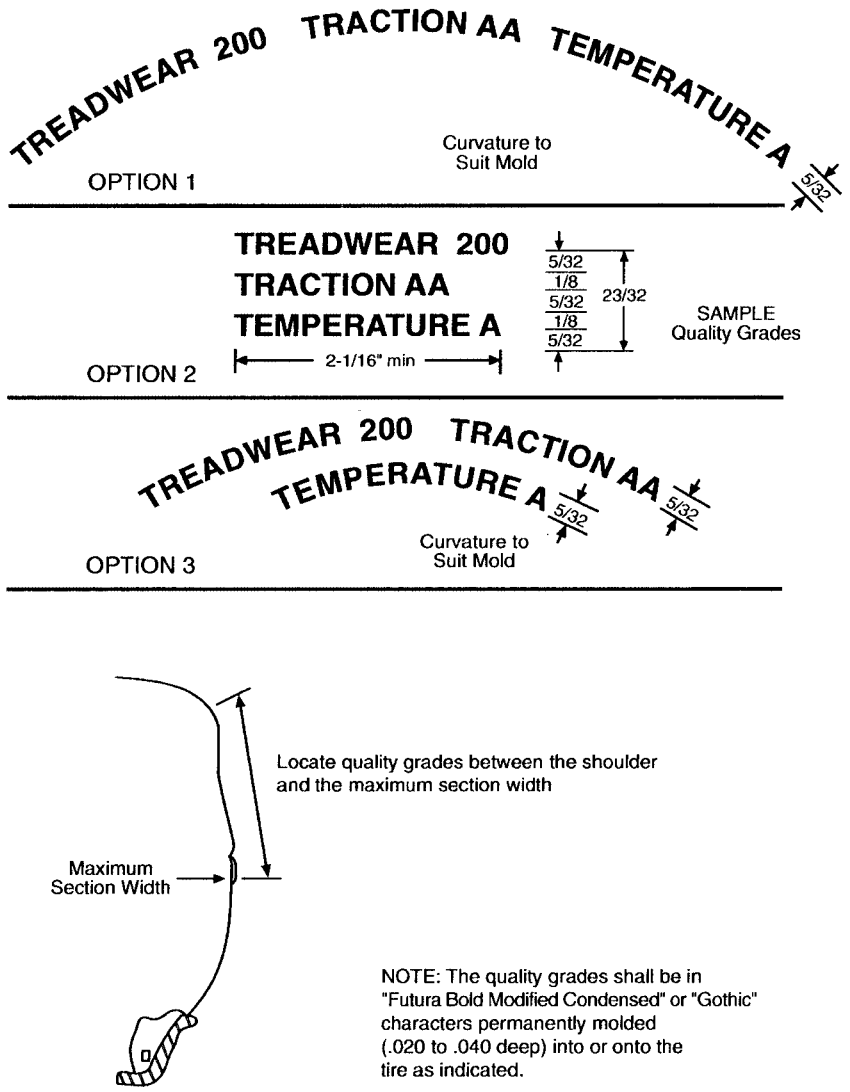

Figure 1

FIGURE 2—[PART I]—DOT QUALITY GRADES

TREADWEAR

TRACTION AA A B C

TEMPERATURE A B C

(Part II) All Passenger Car Tires Must Conform to Federal Safety Requirements In Addition To These Grades

TREADWEAR

The treadwear grade is a comparative rating based on the wear rate of the tire when tested under controlled conditions on a specified government test course. For example, a tire graded 150 would wear one and one-half (1½) times as well on the government course as a tire graded 100. The relative performance of tires depends upon the actual conditions of their use, however, and may depart significantly from the norm due to variations in driving habits, service practices and differences in road characteristics and climate.

TRACTION

The traction grades, from highest to lowest, are AA, A, B, and C. Those grades represent the tire's ability to stop on wet pavement as measured under controlled conditions on specified government test surfaces of asphalt and concrete. A tire marked C may have poor traction performance. Warning: The traction grade assigned to this tire is based on straight-ahead braking traction tests, and does not include acceleration, cornering, hydroplaning, or peak traction characteristics.

TEMPERATURE

The temperature grades are A (the highest), B, and C, representing the tire's resistance to the generation of heat and its ability to dissipate heat when tested under controlled conditions on a specified indoor laboratory test wheel. Sustained high temperature can cause the material of the tire to degenerate and reduce tire life, and excessive temperature can lead to sudden tire failure. The grade C corresponds to a level of performance which all passenger car tires must meet under the Federal Motor Safety Standard No. 109. Grades B and A represent higher levels of performance on the laboratory test wheel than the minimum required by law. Warning: The temperature grade for this tire is established for a tire that is properly inflated and not overloaded. Excessive speed, underinflation, or excessive loading, either separately or in combination, can cause heat buildup and possible tire failure.

APPENDIX A—TREADWEAR TEST COURSE AND DRIVING PROCEDURES

Introduction. The test course consists of three loops of a total of 400 miles in the geographical vicinity of Goodfellow AFB, San Angelo, Tex.

The first loop runs south 143 miles through the cities of Eldorado, Sonora, and Juno, Tex. to the Camp Hudson Historical Marker, and returns by the same route.

The second loop runs east over Farm and Ranch Roads (FM) and returns to its starting point.

The third loop runs northwest to Water Valley, northeast toward Robert Lee and returns via Texas 208 to the vicinity of Goodfellow AFB.

Route. The route is shown in Figure 3. The table identifies key points by number. These numbers are encircled in Figure 3 and in parentheses in the descriptive material that follows.

Southern Loop. The course begins at the intersection (1) of Ft. McKavitt Road and Paint Rock Road (FM388) at the northwest corner of Goodfellow AFB.

Drive east via FM 388 to junction with Loop Road 306 (2). Turn right onto Loop Road 306 and proceed south to junction with US277 (3). Turn onto US277 and proceed south through Eldorado and Sonora (4), continuing on US277 to junction with FM189 (5). Turn right onto FM189 and proceed to junction with Texas 163 (6). Turn left onto Texas 163, proceed south to Camp Hudson Historical Marker and onto the paved shoulder (7). Reverse route to junction of Loop Road 306 and FM 388 (2).

Eastern Loop. From junction of Loop Road 306 and FM388 (2), make right turn onto FM388 and drive east to junction with FM2334 (13). Turn right onto FM2334 and proceed south across FM765 (14) to junction of FM2334 and US87 (15). For convoys that originate at Goodfellow AFB, make U-turn and return to junction of FM388 and Loop Road 306 (2) by the same route. For convoys that do not originate at Goodfellow AFB, upon reaching junction of FM2334 and US87 (15), make U-Turn and continue north on FM2334 past the intersection with FM388 to Veribest Cotton Gin, a distance of 1.8 miles beyond the intersection. Make U-turn and return to junction of FM2334 and FM388. Turn right onto FM388, proceed west to junction FM388 and Loop Road 306.

Northwestern Loop. From junction of Loop Road 306 and FM388 (2), make right turn onto Loop Road 306. Proceed onto US277, to junction with FM2105 (8). Turn left onto FM2105 and proceed west to junction with US87 (10). Turn right on US87 and proceed northwest to the junction with FM2034 near the town of Water Valley (11). Turn right onto FM2034 and proceed north to Texas 208 (12). Turn right onto Texas 208 and proceed south to junction with FM2105 (9). Turn left onto FM2105 and proceed east to junction with US277 (8). Turn right onto US277 and proceed south onto Loop Road 306 to junction with FM388 (2). For convoys that originate at Goodfellow AFB, turn right onto FM388 and proceed to starting point at junction of Ft. McKavitt Road and FM388 (1). For convoys that do not originate at Goodfellow AFB, do not turn right onto FM388 but continue south on Loop Road 306.

Driving instructions. The drivers shall run at posted speed limits throughout the course unless an unsafe condition arises. If such condition arises, the speed should be reduced to the maximum safe operating speed.

Braking Procedures at STOP signs. There are a number of intersections at which stops are required. At each of these intersections a series of signs is placed in a fixed order at follows:

SIGN LEGEND

Highway Intersection 1000 (or 2000) Feet
STOP AHEAD
Junction XXX
Direction Sign (Mereta→)
STOP or YIELD

Procedures. 1. Approach each intersection at posted speed limit.

2. When abreast of the STOP AHEAD sign, apply the brakes so that the vehicle decelerates smoothly to 20 mph when abreast of the direction sign.

3. Come to a complete stop at the STOP sign or behind any vehicle already stopped.

KEY POINTS ALONG TREADWEAR TEST COURSE, APPROX. MILEAGES, AND REMARKS

		Mileages	*Remarks*
1	Ft. McKavitt Road & FM 388	0	
2	FM388 & Loop 306 *	2	STOP
3	Loop 306 & US277 . .	10	
4	Sonora	72	
5	US 277 & FM 189 . . .	88	
6	FM 189 & Texas 163 .	124	
7	Historical Marker . . . (Camp Hudson)	143	U-TURN
4	Sonora	214	
3	Loop 306 & US 277 . .	276	
2	FM 388 & Loop 306 .	283	
13	FM 388 & FM 2334 †	290	STOP
14	FM 2334 & FM 765 . .	292	STOP
15	FM 2334 & US 87 . . .	295	U-TURN
14	FM 2334 & FM 765 . .	298	STOP
13	FM 388 & FM 2334 . .	300	STOP/YIELD/ BLINKING RED LIGHT
2	FM 388 & Loop 306	307	STOP/YIELD/ BLINKING RED LIGHT
8	US 277 & FM 2105 . .	313	
9	FM 2105 & Texas 208	317	STOP
10	FM 2105 & US 87 . . .	320	STOP
11	FM 2034 & US 87 . . .	338	
12	FM 2034 & Texas 208	362	YIELD
9	FM 2105 & Texas 208	387	
8	FM 2105 & US 277 . .	391	YIELD/STOP
2	FM 388 & Loop 306 *	398	
1	Ft. McKavitt Road & FM 388	400	
16	Veribest Cotton Gin .	1.8	U-TURN

* Convoys not originating at Goodfellow AFB will not traverse the leg of course.

† Convoys not originating at Goodfellow AFB will proceed to 16, Veribest Cotton Gin, Make U-Turn and return to 13.

FIGURE 2

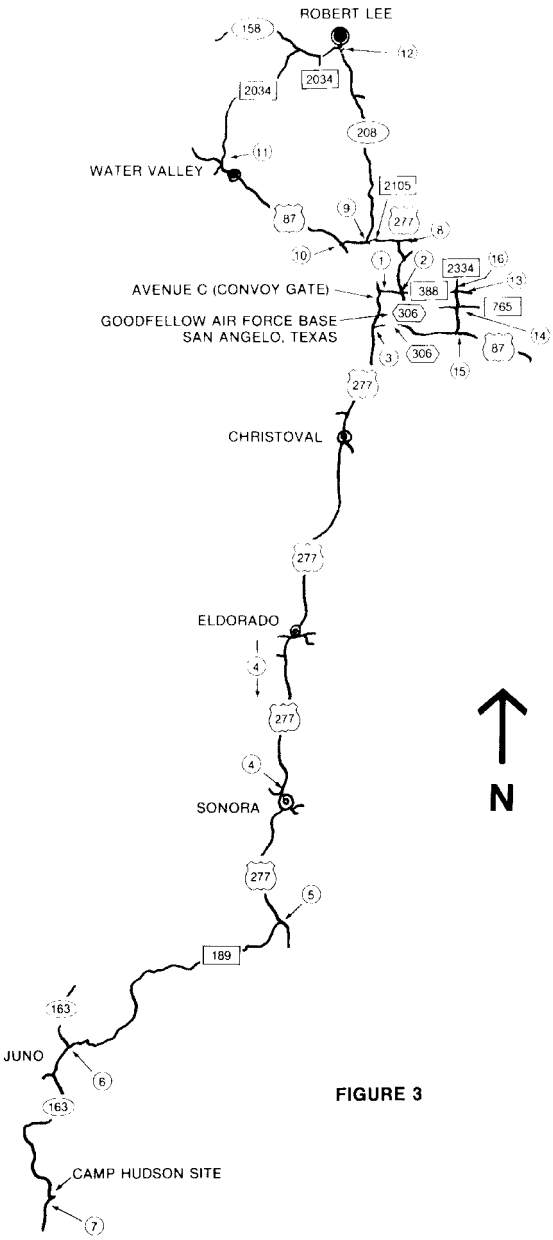

FIGURE 3

APPENDIX B—TRACTION SKID PADS

Two skid pads have been laid on an unused runway and taxi strip on Goodfellow AFB. Their location is shown in Figure 4.

The asphalt skid pad is 600 ft. x 60 ft. and is shown in black on the runway in Figure 4. The pad is approached from either end by a

75 ft. ramp followed by 100 ft. of level pavement. This arrangement permits the skid trailers to stabilize before reaching the test area. The approaches are shown on the figure by the hash-marked area.

The concrete pad is 600 ft. x 48 ft. and is on the taxi strip. The approaches to the concrete pad are of the same design as those for the asphalt pads.

A two lane asphalt road has been built to connect the runway and taxi strip. The road is parallel to the northeast-southwest runway at a distance of 100 ft. The curves have super-elevation to permit safe exit from the runway at operating speeds.

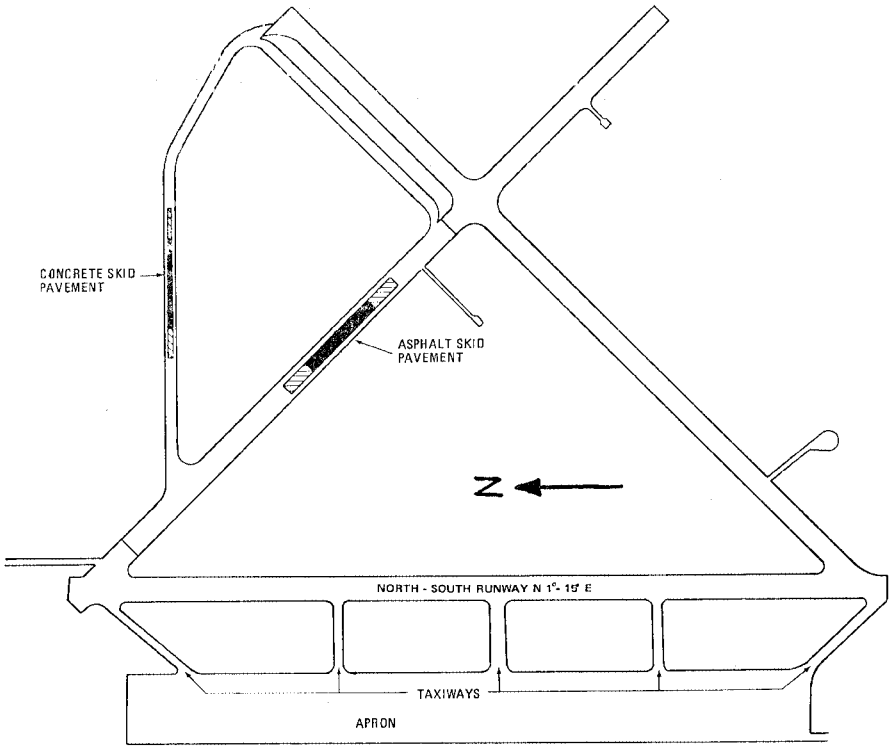

FIGURE 4

APPENDIX C—METHOD OF LEAST SQUARES

The method of least squares is a method of calculation by which it is possible to obtain a reliable estimate of a true physical relationship from a set of data which involve random error. The method may be used to establish a regression line that minimizes the sum of the squares of the deviations of the measured data points from the line. The regression line is consequently described as the line of ''best fit'' to the data points. It is described in terms of its slope and its ''y'' intercept.

The graph in Figure 5 depicts a regression line calculated using the least squares method from data collected from a hypothetical treadwear test of 6,400 miles, with tread depth measurements made at every 500 miles.

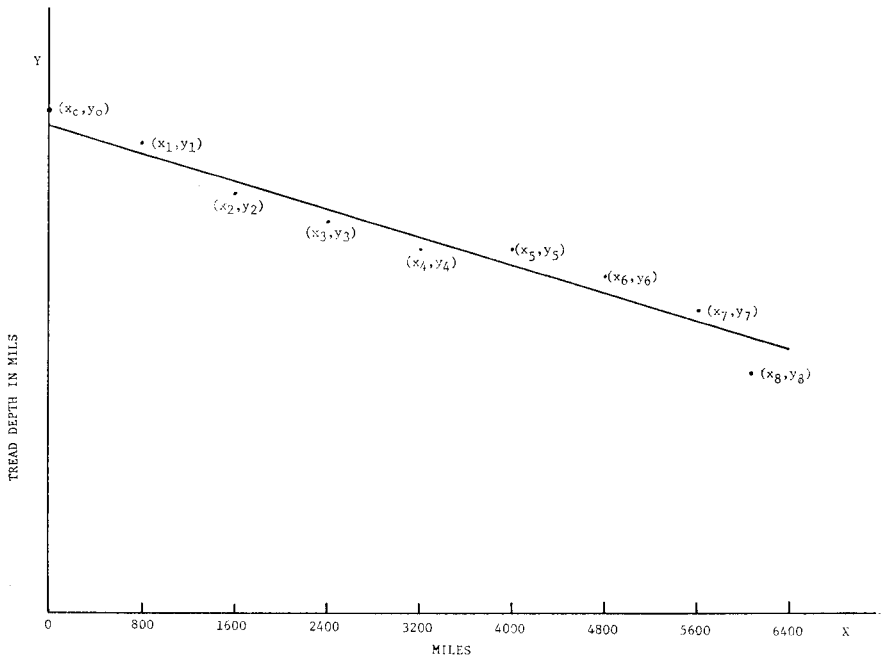

FIGURE 5

In this graph, $x_j, y_{j(j\&equal\geq 0,1,.\ \geq .\ \geq .8)}$ are the individual data points representing the tread depth measurements (the overall average for the tire with 6 measurements in each tire groove) at the beginning of the test (after break-in) and at the end of each 800-mile segment of the test.

The absolute value of the slope of the regression line is an expression of the mils of tread worn per 1,000 miles, and is calculated by the following formula:

$$b = 1000 \frac{\left(\sum_{j=0}^{8} X_j Y_j - \frac{1}{9}\sum_{j=0}^{8} X_j \sum_{j=0}^{8} Y_j\right)}{\sum_{j=0}^{8} X_j^{\,2} - \frac{1}{9}\left(\sum_{j=0}^{8} X_j\right)^2}$$

The ''*y*'' intercept of the regression line (a) in mils is calculated by the following formula:

$$a = \frac{1}{9}\sum_{j=0}^{8} Y_j - \frac{b}{9000}\sum_{j=0}^{8} X_j$$

APPENDIX D—USER FEES

1. *Course Monitoring Tires:* A fee of $333.00 will be assessed for each course monitoring tire purchased from NHTSA at Goodfellow Air Force Base, San Angelo, Texas. This fee is based upon the direct and indirect costs attributable to: (a) the purchase of course monitoring tires by NHTSA, (b) a pro rata allocation of salaries and general facility costs associated with maintenance of the tires, and (c) warehouse storage fees for the tires.

2. *Use of Government Traction Skid Pads:* A fee of $34.00 will be assessed for each hour, or fraction thereof, that the traction skid pads at Goodfellow Air Force Base, San Angelo, Texas are used. This fee is based upon the direct and indirect costs attributable to: (a) depreciation on facilities and equipment comprising or used in conjunction with the traction skid pads (i.e., skid system, water truck, air compressor, skid track, tractor sweeper, equipment, buildings), (b) the calibration of the traction skid pads, and (c) a pro rata allocation of salaries and general facility costs associated with maintenance of the traction skid pads.

3. Fee payments shall be by check, draft, money order, or Electronic Funds Transfer

System made payable to the Treasurer of the United States.

4. The fees set forth in this appendix continue in effect until adjusted by the Administrator of NHTSA. The Administrator reviews the fees set forth in this appendix and, if appropriate, adjusts them by rule at least every 2 years.

[43 FR 30549, July 17, 1978]

EDITORIAL NOTE: For FEDERAL REGISTER citations affecting § 575.104, see the List of CFR Sections Affected, which appears in the Finding Aids section of the printed volume and on GPO Access.

§ 575.105 Vehicle rollover.

(a) *Purpose and scope.* This section requires manufacturers of utility vehicles to alert the drivers of those vehicles that they have a higher possibility of rollover than other vehicle types and to advise them of steps that can be taken to reduce the possibility of rollover and/or to reduce the likelihood of injury in a rollover.

(b) *Application.* This section applies to utility vehicles.

(c) *Definitions.*

Utility vehicles means multipurpose passenger vehicles (other than those which are passenger car derivatives) which have a wheelbase of 110 inches or less and special features for occasional off-road operation.

(d) *Required information.* (1) *Rollover Warning Label.* (i) Except as provided in paragraph (d)(2) of this section, each vehicle must have a label permanently affixed to either side of the sun visor, at the manufacturer's option, at the driver's seating position. The label must conform in content, form and sequence to the label shown in Figure 1 of this section, and must comply with the following requirements:

(A) The heading area must be yellow, with the text and the alert symbol in black.

(B) The message area must be white with black text.

(C) The pictograms must be black with a white background.

(D) The label must be appropriately sized so that it is legible, visible and prominent to the driver.

(ii) *Vehicles manufactured on or after September 1, 1999 and before September 1, 2000.* When the rollover warning label required by paragraph (d)(1)(i) of this section and the air bag warning label required by paragraph S4.5.1(b) of 49 CFR 571.208 are affixed to the same side of the driver side sun visor, either:

(A) The rollover warning label must be affixed to the right (as viewed from the driver's seat) of the air bag warning label and the labels may not be contiguous; or

(B) The pictogram of the air bag warning label must be separated from the pictograms of the rollover warning label by text, and

(*1*) The labels must be located such that the shortest distance from any of the lettering or graphics on the rollover warning label to any of the lettering or graphics on the air bag warning label is not less than 3 cm, or

(*2*) If the rollover warning and air bag warning labels are each completely surrounded by a continuous solid-lined border, the shortest distance from the border of the rollover warning label to the border of the air bag warning label is not less than 1 cm.

(iii) The manufacturer must select the option to which a vehicle is certified by the time the manufacturer certifies the vehicle and may not thereafter select a different option for that vehicle. If a manufacturer chooses to certify compliance with more than one compliance option, the vehicle must satisfy the requirements applicable to each of the options selected.

(iv) *Vehicles manufactured on or after September 1, 2000.* When the rollover warning label required by paragraph (d)(1)(i) of this section and the air bag warning label required by paragraph S4.5.1(b) of 49 CFR 571.208 are affixed to the same side of the driver side sun visor the pictogram of the air bag warning label must be separated from the pictograms of the rollover warning label by text and:

(A) The labels must be located such that the shortest distance from any of the lettering or graphics on the rollover warning label to any of the lettering or graphics on the air bag warning label is not less than 3 cm, or

(B) If the rollover warning and air bag warning labels are each completely surrounded by a continuous solid-lined border, the shortest distance from the border of the rollover warning label to the border of the air bag warning label must be not less than 1 cm.

(2) *Alternate location for warning label.* As an alternative to affixing the warning label required by paragraph (d)(1)(i) of this section to the driver's sun visor, a manufacturer may permanently affix the label to the lower rear corner of the forwardmost driver's side window. The label must be legible, visible and prominent to a person next to the exterior of the driver's door.

(3) *Rollover Alert Label.* If the label required by paragraph (d)(1) of this section and affixed to the driver side sun visor is not visible when the sun visor is in the stowed position, an alert label must be permanently affixed to that visor so that the label is visible when the visor is in that position. The alert label must comply with the following requirements:

(i) The label must read:

ROLLOVER WARNING

Flip Visor Over

(ii) The label must be black with yellow text.

(iii) The label must be no less than 20 square cm.

(4) *Owner's Manual.* The owner's manual must include the following statements and discussions:

(i) The statement ''Utility vehicles have a significantly higher rollover rate than other types of vehicles.''

(ii) A discussion of the vehicle design features which cause this type of vehicles to be more likely to rollover (e.g., higher center of gravity);

(iii) A discussion of the driving practices that can reduce the risk of a rollover (e.g., avoiding sharp turns at excessive speed); and

(iv) The statement: ''In a rollover crash, an unbelted person is significantly more likely to die than a person wearing a seat belt.''

(5) *Combined Rollover and Air Bag Alert Warning.* If the warnings required by paragraph (d)(1) of this section and paragraph S4.5.1(b) of 49 CFR 571.208 to be affixed to the driver side sun visor are not visible when the sun visor is in the stowed position, a combined rollover and air bag alert label may be permanently affixed to that visor in lieu of the alert labels required by paragraph (d)(3) of this section and paragraph S4.5.1(c)(2) of 49 CFR 571.208. The combined rollover and air bag alert label must be visible when the visor is in the stowed position. The combined rollover and air bag alert warning must conform in content to the label shown in Figure 2 of this section, and must comply with the following requirements:

(i) The label must read:

AIR BAG AND ROLLOVER WARNINGS

Flip Visor Over

(ii) The message area must be black with yellow text. The message area must be no less than 20 square cm.

(iii) The pictogram shall be black with a red circle and slash on a white background. The pictogram must be not less than 20 mm in diameter.

(6) At the option of the manufacturer, the requirements in paragraph (d)(1)(i) for labels that are permanently affixed to specified parts of the vehicle may instead be met by permanent marking and molding of the required information.

BLACK TEXT ON YELLOW BACKGROUND

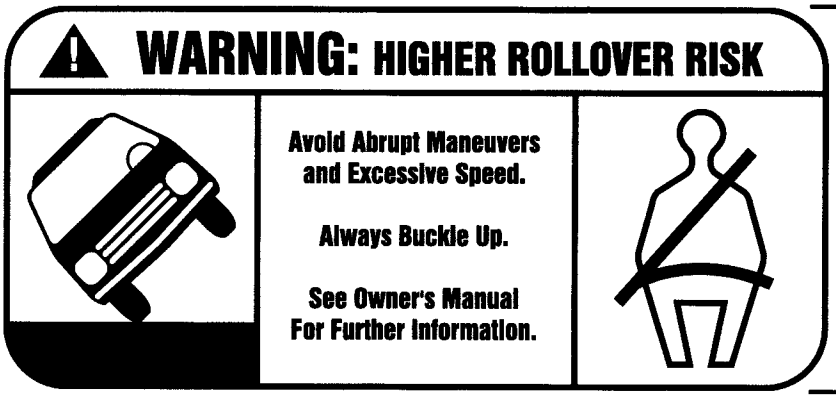

ARTWORK AND REMAINING TEXT IN BLACK AND WHITE

FIGURE 1

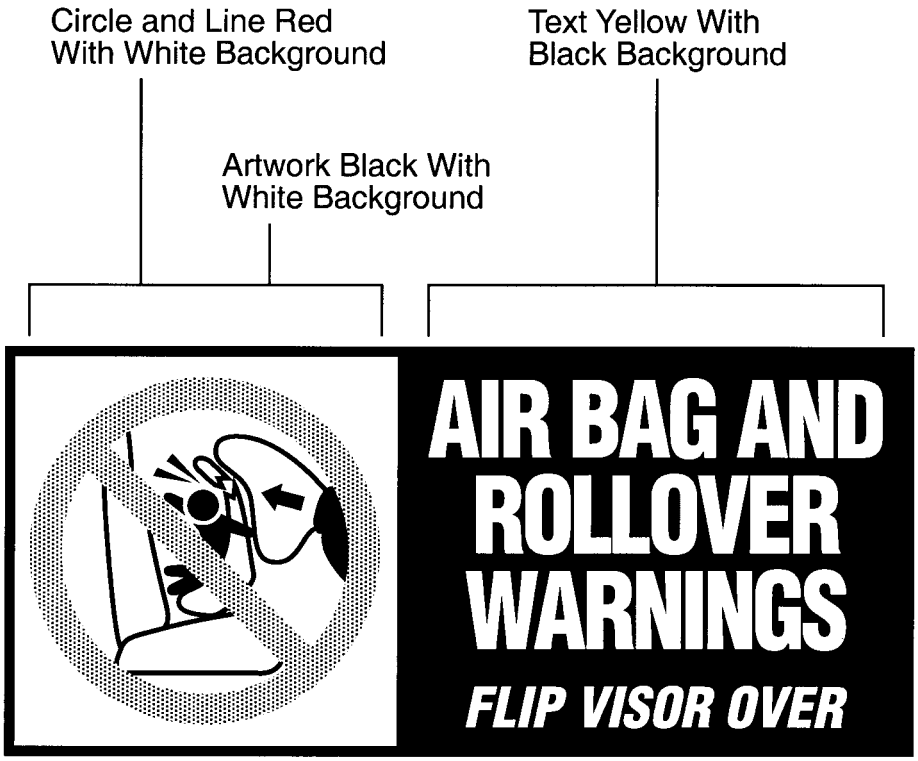

Figure 2. Sun Visor Label Visible When Visor is in Up Position.

[64 FR 11733, Mar. 9, 1999, as amended at 64 FR 47123, Aug. 30, 1999]

PART 576—RECORD RETENTION

Sec.
576.1 Scope.
576.2 Purpose.
576.3 Application.
576.4 Definitions.
576.5 Basic requirements.
576.6 Records.
576.7 Retention.
576.8 Malfunctions covered.

AUTHORITY: 49 U.S.C. 322(a), 30117, 30120(g), 30141–30147; delegation of authority at 49 CFR 1.50.

SOURCE: 39 FR 30045, Aug. 20, 1974, unless otherwise noted.

EDITORIAL NOTE: For an interpretation document regarding part 576, see 40 FR 3296, Jan. 21, 1975.

§ 576.1 Scope.

This part establishes requirements for the retention by manufacturers of motor vehicles and of motor vehicle equipment, of claims, complaints, reports, and other records concerning alleged and proven motor vehicle or motor vehicle equipment defects and malfunctions that may be related to motor vehicle safety.

[67 FR 45872, July 10, 2002]

§ 576.2 Purpose.

The purpose of this part is to preserve records that are needed for the proper investigation, and adjudication or other disposition, of possible defects related to motor vehicle safety and instances of nonconformity to the motor vehicle safety standards and associated regulations.

§ 576.3 Application.

This part applies to all manufacturers of motor vehicles, with respect to all records generated or acquired on or after August 16, 1969, and to all manufacturers of motor vehicle equipment, with respect to all records in their possession, generated or acquired on or after August 9, 2002.

[67 FR 45873, July 10, 2002]

§ 576.4 Definitions.

All terms in this part that are defined in 49 U.S.C. 30102 and part 579 of this chapter are used as defined therein.

[67 FR 45873, July 10, 2002]

§ 576.5 Basic requirements.

(a) Each manufacturer of motor vehicles, child restraint systems, and tires shall retain, as specified in § 576.7 of this part, all records described in § 576.6 of this part for a period of five calendar years from the date on which they were generated or acquired by the manufacturer.

(b) Each manufacturer of motor vehicles and motor vehicle equipment shall retain, as specified in § 576.7 of this part, all the underlying records on which the information reported under part 579 of this chapter is based, for a period of five calendar years from the date on which they were generated or acquired by the manufacturer, except as provided in paragraph (c) of this section.

(c) Manufacturers need not retain copies of documents transmitted to NHTSA pursuant to parts 573, 577, and 579 of this chapter.

[67 FR 45873, July 10, 2002]

§ 576.6 Records.

Records to be maintained by manufacturers under this part include all documentary materials, films, tapes, and other information-storing media that contain information concerning malfunctions that may be related to motor vehicle safety. Such records include, but are not limited to, reports and other documents, including material generated or communicated by computer, telefax or other electronic means, that are related to work performed under warranties; and any lists, compilations, analyses, or discussions of such malfunctions contained in internal or external correspondence of the manufacturer, including communications transmitted electronically.

[67 FR 45873, July 10, 2002]

§ 576.7 Retention.

Duplicate copies need not be retained. Information may be reproduced or transferred from one storage medium to another (e.g., from paper files to microfilm) as long as no information is lost in the reproduction or transfer, and when so reproduced or transferred the original form may be treated as a duplicate.

§ 576.8 Malfunctions covered.

For purposes of this part, ''malfunctions that may be related to motor vehicle safety'' shall include, with respect to a motor vehicle or item of motor vehicle equipment, any failure or malfunction beyond normal deterioration in use, or any failure of performance, or any flaw or unintended deviation from design specifications, that could in any reasonably foreseeable manner be a causative factor in, or aggravate, an accident or an injury to a person.

PART 577—DEFECT AND NONCOMPLIANCE NOTIFICATION

Sec.

577.1 Scope.
577.2 Purpose.
577.3 Application.
577.4 Definitions.
577.5 Notification pursuant to a manufacturer's decision.
577.6 Notification pursuant to Administrator's decision.
577.7 Time and manner of notification.
577.8 Disclaimers.
577.9 Conformity to statutory requirements.
577.10 Follow-up notification.

AUTHORITY: 49 U.S.C. 30102–103, 30112, 30115, 30117–121, 30166–167; delegations of authority at 49 CFR 1.50 and 49 CFR 501.8.

SOURCE: 41 FR 56816, Dec. 30, 1976, unless otherwise noted.

§ 577.1 Scope.

This part sets forth requirements for notification to owners of motor vehicles and replacement equipment about the possibility of a defect which relates to motor vehicle safety or a noncompliance with a Federal motor vehicle safety standard.

§ 577.2 Purpose.

The purpose of this part is to ensure that notifications of defects or noncompliances adequately inform and effectively motivate owners of potentially defective or noncomplying motor vehicles or items of replacement equipment to have such vehicles or equipment inspected and, where necessary, remedied as quickly as possible.

§ 577.3 Application.

This part applies to manufacturers of complete motor vehicles, incomplete motor vehicles, and replacement equipment. In the case of vehicles manufactured in two or more stages, compliance by either the manufacturer of the incomplete vehicle, any subsequent manufacturer, or the manufacturer of affected replacement equipment, shall be considered compliance by each of those manufacturers.

§ 577.4 Definitions.

For the purposes of this part:

Act means 49 U.S.C. Chapter 30101–30169.

Administrator means the Administrator of the National Highway Traffic Safety Administration or his delegate.

First purchaser means the first purchaser in good faith for a purpose other than resale.

Leased motor vehicle means any motor vehicle that is leased to a person for a term of at least four months by a lessor who has leased five or more vehicles in the twelve months preceding the date of notification by the vehicle manufacturer of the existence of a safety-related defect or noncompliance with a Federal motor vehicle safety standard in the motor vehicle.

Lessee means a person who is the lessee of a leased motor vehicle as defined in this section.

Lessor means a person or entity that is the owner, as reflected on the vehicle's title, of any five or more leased vehicles (as defined in this section), as of the date of notification by the manufacturer of the existence of a safety-related defect or noncompliance with a Federal motor vehicle safety standard in one or more of the leased motor vehicles.

Owners includes purchaser.

[41 FR 56816, Dec. 30, 1976, as amended at 60 FR 17270, Apr. 5, 1995]

§ 577.5 Notification pursuant to a manufacturer's decision.

(a) When a manufacturer of motor vehicles or replacement equipment determines that any motor vehicle or item of replacement equipment produced by him contains a defect which relates to motor vehicle safety, or fails to conform to an applicable Federal motor vehicle safety standard, he shall provide notification in accordance with paragraph (a) of § 577.7, unless the manufacturer is exempted by the Administrator (pursuant to section 157 of the Act) from giving such notification. The notification shall contain the information specified in this section. The information required by paragraphs (b) and (c) of this section shall be presented in the form and order specified. The information required by paragraphs (d) through (h) of this section may be presented in any order. The manufacturer shall mark the outside of each envelope in which it sends an owner notification letter with a notation that includes the words ''SAFETY,'' RECALL,'' and ''NOTICE,'' all in capital letters and in type that is larger than that used in the address section, and is also distinguishable from the other type in a manner other than size. Except where the format of the envelope has been previously approved by NHTSA, each manufacturer must submit the envelope format it intends to use to NHTSA at least 5 Federal government business days before mailing to owners, in the same manner as is required by § 573.5(c)(9) for owner notification letters. Notification sent to an owner whose address is in either the Commonwealth of Puerto Rico or the Canal Zone shall be written in both English and Spanish.

(b) An opening statement: ''This notice is sent to you in accordance with

the requirements of the National Traffic and Motor Vehicle Safety Act.''

(c) Whichever of the following statements is appropriate:

(1) ''(Manufacturer's name or division) has decided that a defect which relates to motor vehicle safety exists in (identified motor vehicles, in the case of notification sent by a motor vehicle manufacturer; identified replacement equipment, in the case of notification sent by a replacement equipment manufacturer);'' or

(2) ''(Manufacturer's name or division) has decided that (identified motor vehicles, in the case of notification sent by a motor vehicle manufacturer; identified replacement equipment, in the case of notification sent by a replacement equipment manufacturer) fail to conform to Federal Motor Vehicle Safety Standard No. (number and title of standard).''

(d) When the manufacturer determines that the defect or noncompliance may not exist in each such vehicle or item of replacement equipment, he may include an additional statement to that effect.

(e) A clear description of the defect or noncompliance, which shall include—

(1) An identification of the vehicle system or particular item(s) of motor vehicle equipment affected.

(2) A description of the malfunction that may occur as a result of the defect or noncompliance. The description of a noncompliance with an applicable standard shall include, in general terms, the difference between the performance of the noncomplying vehicle or item of replacement equipment and the performance specified by the standard;

(3) A statement of any operating or other conditions that may cause the malfunction to occur; and

(4) A statement of the precautions, if any, that the owners should take to reduce the chance that the malfunction will occur before the defect or noncompliance is remedied.

(f) An evaluation of the risk to motor vehicle safety reasonably related to the defect or noncompliance.

(1) When vehicle crash is a potential occurrence, the evaluation shall include whichever of the following is appropriate:

(i) A statement that the defect or noncompliance can cause vehicle crash without prior warning; or

(ii) A description of whatever prior warning may occur, and a statement that if this warning is not heeded, vehicle crash can occur.

(2) When vehicle crash is not the potential occurrence, the evaluation must include a statement indicating the general type of injury to occupants of the vehicle, or to persons outside the vehicle, that can result from the defect or noncompliance, and a description of whatever prior warning may occur.

(g) A statement of measures to be taken to remedy the defect or noncompliance, in accordance with paragraph (g)(1) or (g)(2) of this section, whichever is appropriate.

(1) When the manufacturer is required by the Act to remedy the defect or noncompliance without charge, or when he will voluntarily so remedy in full conformity with the Act, he shall include—

(i) A statement that he will cause such defect or noncompliance to be remedied without charge, and whether such remedy will be by repair, replacement, or (except in the case of replacement equipment) refund, less depreciation, of the purchase price.

(ii) The earliest date on which the defect or noncompliance will be remedied without charge. In the case of remedy by repair, this date shall be the earliest date on which the manufacturer reasonably expects that dealers or other service facilities will receive necessary parts and instructions. The manufacturer shall specify the last date, if any, on which he will remedy tires without charge.

(iii) In the case of remedy by repair through the manufacturer's dealers or other service facilities:

(A) A general description of the work involved in repairing the defect or noncompliance; and

(B) The manufacturer's estimate of the time reasonably necessary to perform the labor required to correct the defect or noncompliance.

(iv) In the case of remedy by repair through service facilities other than

those of the manufacturer or its dealers:

(A) The name and part number of each part must be added, replaced, or modified;

(B) A description of any modifications that must be made to existing parts, which shall also be identified by name and part number;

(C) Information as to where needed parts will be available;

(D) A detailed description (including appropriate illustrations) of each step required to correct the defect or noncompliance;

(E) The manufacturer's estimate of the time reasonably necessary to perform the labor required to correct the defect or noncompliance; and

(F) The manufacturer's recommendations of service facilities where the owner should have the repairs performed.

(v) In the case of remedy by replacement, a description of the motor vehicle or item of replacement equipment that the manufacturer will provide as a replacement for the defective or noncomplying vehicle or equipment.

(vi) In the case of remedy by refund of purchase price, the method or basis for the manufacturer's assessment of depreciation.

(vii) A statement informing the owner that he or she may submit a complaint to the Administrator, National Highway Traffic Safety Administration, 400 Seventh Street, SW., Washington, DC 20590 or call the toll free Auto Safety Hotline at 800–424–9393 (Washington, DC area residents may call 202–366–0123), if the owner believes that:

(A) The manufacturer, distributor, or dealer has failed or is unable to remedy the defect or noncompliance without charge.

(B) The manufacturer has failed or is unable to remedy the defect or noncompliance without charge—

(*1*) (In the case of motor vehicles or items of replacement equipment, other than tires) within a reasonable time, which is not longer than 60 days in the case of repair after the owner's first tender to obtain repair following the earliest repair date specified in the notification, unless the period is extended by Administrator.

(*2*) (In the case of tires) after the date specified in the notification on which replacement tires will be available.

(2) When the manufacturer is not required to remedy the defect or noncompliance without charge and he will not voluntarily so remedy, the statement shall include—

(i) A statement that the manufacturer is not required by the Act to remedy without charge.

(ii) A statement of the extent to which the manufacturer will voluntarily remedy, including the method of remedy and any limitations and conditions imposed by the manufacturer on such remedy.

(iii) The manufacturer's opinion whether the defect or noncompliance can be remedied by repair. If the manufacturer believes that repair is possible, the statement shall include the information specified in paragraph (g)(1)(iv) of this section, except that;

(A) The statement required by paragraph (g)(1)(iv)(A) of this section shall also indicate the suggested list price of each part.

(B) The statement required by paragraph (g)(1)(iv)(C) of this section shall also indicate the manufacturer's estimate of the date on which the parts will be generally available.

(h) Any lessor who receives a notification of a determination of a safety-related defect or noncompliance pertaining to any leased motor vehicle shall send a copy of such notice to the lessee as prescribed by § 577.7(a)(2)(iv). This requirement applies to both initial and follow-up notifications, but does not apply where the manufacturer has notified a lessor's lessees directly.

(Authority: Secs. 108, 112, and 119, Pub. L. 89–563; 80 Stat. 718; secs. 102, 103, and 104, Pub. L. 93–492, 88 Stat. 1470 (15 U.S.C. 1397, 1401, 1408, and 1411–1420); delegation of authority at 49 CFR 1.50)

[41 FR 56816, Dec. 30, 1976, as amended at 46 FR 6971, Jan. 22, 1981; 46 FR 28657, May 28, 1981; 60 FR 17270, Apr. 5, 1995; 61 FR 279, Jan. 4, 1996]

§ 577.6 Notification pursuant to Administrator's decision.

(a) *Agency-ordered notification.* When a manufacturer is ordered pursuant to 49 U.S.C. 30118(b) to provide notification of a defect or noncompliance, he

shall provide such notification in accordance with §§577.5 and 577.7, except that the statement required by paragraph (c) of §577.5 shall indicate that the decision has been made by the Administrator of the National Highway Traffic Safety Administration.

(b) *Provisional notification.* When a manufacturer does not provide notification as required by paragraph (a) of this section, and an action concerning the Administrator's order to provide such notification has been filed in a United States District Court, the manufacturer shall, upon the Administrator's further order, provide in accordance with paragraph (b) of §577.7 a provisional notification containing the information specified in this paragraph, in the order and, where specified, the form of paragraphs (b)(1) through (b)(12) of this section.

(1) An opening statement: ''This notice is sent to you in accordance with the requirements of the National Traffic and Motor Vehicle Safety Act.''

(2) Whichever of the following statements is appropriate:

(i) ''The Administrator of the National Highway Traffic Safety Administration has decided that a defect which relates to motor vehicle safety exists in (identified motor vehicles, in the case of notification sent by a manufacturer of motor vehicles; identified replacement equipment, in the case of notification sent by a manufacturer of replacement equipment);'' or

(ii) ''The Administrator of the National Highway Traffic Safety Administration has decided that (identified motor vehicles in the case of notification sent by a motor vehicle manufacturer; identified replacement equipment, in the case of notification sent by a manufacturer of replacement equipment) fail to conform to federal Motor Vehicle Safety Standard No. (number and title of standard).''

(3) When the Administrator decides that the defect or noncompliance may not exist in each such vehicle or item of replacement equipment, the manufacturer may include an additional statement to that effect.

(4) The statement: ''(Manufacturer's name or division) is contesting this determination in a proceeding in the Federal courts and has been required to issue this notice pending the outcome of the court proceeding.''

(5) A clear description of the Administrator's stated basis for his decision, as provided in his order, including a brief summary of the evidence and reasoning that the Administrator relied upon in making his decision.

(6) A clear description of the Administrator' stated evaluation as provided in his order of the risk to motor vehicle safety reasonably related to the defect or noncompliance.

(7) Any measures that the Administrator has stated in his order should be taken by the owner to avoid an unreasonable hazard resulting from the defect or noncompliance.

(8) A brief summary of the evidence and reasoning upon which the manufacturer relies in contesting the Administrator's determination.

(9) A statement regarding the availability of remedy and reimbursement in accordance with paragraph (b)(9)(i) or (9)(ii) of this section, whichever is appropriate.

(i) When the purchase date of the vehicle or item of equipment is such that the manufacturer is required by the Act to remedy without charge or to reimburse the owner for reasonable and necessary repair expenses, he shall include—

(A) A statement that the remedy will be provided without charge to the owner if the Court upholds the Administrator's decision;

(B) A statement of the method of remedy. If the manufacturer has not yet determined the method of remedy, he shall indicate that he will select either repair, replacement with an equivalent vehicle or item of replacement equipment, or (except in the case of replacement equipment) refund, less depreciation, of the purchase price; and

(C) A statement that, if the Court upholds the Administrator's decision, he will reimburse the owner for any reasonable and necessary expenses that the owner incurs (not in excess of any amount specified by the Administrator) in repairing the defect or noncompliance following a date, specified by the manufacturer, which shall not be later than the date of the Administrator's order to issue this notification.

(ii) When the manufacturer is not required either to remedy without charge or to reimburse, he shall include—

(A) A statement that he is not required to remedy or reimburse, or

(B) A statement of the extent to which he will voluntarily remedy or reimburse, including the method of remedy, if then known, and any limitations and conditions on such remedy or reimbursement.

(10) A statement indicating whether, in the manufacturer's opinion, the defect or noncompliance can be remedied by repair. When the manufacturer believes that such remedy is feasible, the statement shall include:

(i) A general description of the work and the manufacturer's estimate of the costs involved in repairing the defect or noncompliance;

(ii) Information on where needed parts and instructions for repairing the defect or noncompliance will be available, including the manufacturer's estimate of the day on which they will be generally available;

(iii) The manufacturer's estimate of the time reasonably necessary to perform the labor required to correct the defect or noncompliance; and

(iv) The manufacturer's recommendations of service facilities where the owner could have the repairs performed, including (in the case of a manufacturer required to reimburse if the Administrator's decision is upheld in the court proceeding) at least one service facility for whose charges the owner will be fully reimbursed if the Administrator's decision is upheld.

(11) A statement that further notice will be mailed by the manufacturer to the owner if the Administrator's decision is upheld in the court proceeding.

(12) An address of the manufacturer where the owner may write to obtain additional information regarding the notification and remedy.

(c) *Post-litigation notification.* When a manufacturer does not provide notification as required in paragraph (a) of this section and the Administrator prevails in an action commenced with respect to such notification, the manufacturer shall, upon the Administrator's further order, provide notification in accordance with paragraph (b) of § 577.7 containing the information specified in paragraph (a) of this section, except that—

(1) The statement required by paragraph (c) of § 577.5 shall indicate that the decision has been made by the Administrator and that his decision has been upheld in a proceeding in the Federal courts; and

(2) When a provisional notification was issued regarding the defect or noncompliance and the manufacturer is required under the Act to reimburse—

(i) The manufacturer shall state that he will reimburse the owner for any reasonable and necessary expenses that the owner incurred (not in excess of any amount specified by the Administrator) for repair of the defect or noncompliance of the vehicle or item of equipment on or after the date on which provisional notification was ordered to be issued and on or before a date not sooner than the date on which this notification is received by the owner. The manufacturer shall determine and specify both dates.

(ii) The statement required by paragraph (g)(1)(vii) of § 577.5 shall also inform the owner that he may submit a complaint to the Administrator if the owner believes that the manufacturer has failed to reimburse adequately.

(3) If the manufacturer is not required under the Act to reimburse, he shall include—

(i) A statement that he is not required to reimburse, or

(ii) When he will voluntarily reimburse, a statement of the extent to which he will do so, including any limitations and conditions on such reimbursement.

[41 FR 56816, Dec. 30, 1976, as amended at 60 FR 17271, Apr. 5, 1995]

§ 577.7 Time and manner of notification.

(a) The notification required by § 577.5 shall—

(1) Be furnished within a reasonable time after the manufacturer first decides that either a defect that relates to motor vehicle safety or a noncompliance exists. The Administrator may order a manufacturer to send the notification to owners on a specific date where the Administrator finds,

after consideration of available information and the views of the manufacturer, that such notification is in the public interest. The factors that the Administrator may consider include, but are not limited to, the severity of the safety risk; the likelihood of occurrence of the defect or noncompliance; whether there is something that an owner can do to reduce either the likelihood of occurrence of the defect or noncompliance or the severity of the consequences; whether there will be a delay in the availability of the remedy from the manufacturer; and the anticipated length of any such delay.

(2) Be accomplished—

(i) In the case of a notification required to be sent by a motor vehicle manufacturer, by first class mail to each person who is registered under State law as the owner of the vehicle and whose name and address are reasonably ascertainable by the manufacturer through State records or other sources available to him. If the owner cannot be reasonably ascertained, the manufacturer shall notify the most recent purchaser known to the manufacturer. The manufacturer shall also provide notification to each lessee of a leased motor vehicle that is covered by an agreement between the manufacturer and a lessor under which the manufacturer is to notify lessees directly of safety-related defects and noncompliances.

(ii) In the case of a notification required to be sent by a replacement equipment manufacturer—

(A) By first class mail to the most recent purchaser known to the manufacturer, and

(B) (Except in the case of a tire) if decided by the Administrator to be required for motor vehicle safety, by public notice in such manner as the Administrator may require after consultation with the manufacturer.

(iii) In the case of a manufacturer required to provide notification concerning any defective or noncomplying tire, by first class or certified mail.

(iv) In the case of a notification to be sent by a lessor to a lessee of a leased motor vehicle, by first-class mail to the most recent lessee known to the lessor. Such notification shall be mailed within ten days of the lessor's receipt of the notification from the vehicle manufacturer.

(b) The notification required by any paragraph of § 577.6 shall be provided:

(1) Within 60 days after the manufacturer's receipt of the Administrator's order to provide the notification, except that the notification shall be furnished within a shorter or longer period if the Administrator incorporates in his order a finding that such period is in the public interest; and

(2) In the manner and to the recipient specified in paragraph (a) of this section.

[41 FR 56816, Dec. 30, 1976, as amended at 60 FR 17271, Apr. 5, 1995]

§ 577.8 Disclaimers.

(a) A notification sent pursuant to §§ 577.5, 577.6, 577.9 or 577.10 regarding a defect which relates to motor vehicle safety shall not, except as specifically provided in this part, contain any statement or implication that there is no defect, that the defect does not relate to motor vehicle safety, or that the defect is not present in the owner's or lessee's vehicle or item of replacement equipment. This section also applies to any notification sent to a lessor or directly to a lessee by a manufacturer.

(b) A notification sent pursuant to §§ 577.5, 577.6, 577.9 or 577.10 regarding a noncompliance with an applicable motor vehicle safety standard shall not, except as specifically provided in this part, contain any statement or implication that there is not a noncompliance, or that the noncompliance is not present in the owner's or lessee's vehicle or item of replacement equipment. This section also applies to any notification sent to a lessor or directly to a lessee by a manufacturer.

[60 FR 17272, Apr. 5, 1995]

§ 577.9 Conformity to statutory requirements.

A notification that does not conform to the requirements of this part is a violation of the Act.

§ 577.10 Follow-up notification.

(a) If, based on quarterly reports submitted pursuant to § 573.6 of this part

or other available information, the Administrator decides that a notification of a safety-related defect of a noncompliance with a Federal motor vehicle safety standard sent by a manufacturer has not resulted in an adequate number of vehicles or items of equipment being returned for remedy, the Administrator may direct the manufacturer to send a follow-up notification in accordance with this section. The scope, timing, form, and content of such follow-up notification will be established by the Administrator, in consultation with the manufacturer, to maximize the number of owners, purchasers, and lessees who will present their vehicles or items of equipment for remedy.

(b) The Administrator may consider the following factors in deciding whether or not to require a manufacturer to undertake a follow-up notification campaign:

(1) The percentage of covered vehicles or items of equipment that have been presented for the remedy;

(2) The amount of time that has elapsed since the prior notification(s);

(3) The likelihood that a follow-up notification will increase the number of vehicles or items of equipment receiving the remedy;

(4) The seriousness of the safety risk from the defect or noncompliance;

(5) Whether the prior notification(s) undertaken by the manufacturer complied with the requirements of the statute and regulations; and

(6) Such other factors as are consistent with the purpose of the statute.

(c) A manufacturer shall be required to provide a follow-up notification under this section only with respect to vehicles or items of equipment that have not been returned for remedy pursuant to the prior notification(s).

(d) Except where the Administrator determines otherwise, the follow-up notification shall be sent to the same categories of recipients that received the prior notification(s).

(e) A follow-up notification must include:

(1) A statement that identifies it as a follow-up to an earlier communication;

(2) A statement urging the recipient to present the vehicle or item of equipment for remedy; and

(3) Except as determined by the Administrator, the information required to be included in the initial notification.

(f) The manufacturer shall mark the outside of each envelope in which it sends a follow-up notification in a manner which meets the requirements of § 577.5(a) of this part.

(g) Notwithstanding any other provision of this part, the Administrator may authorize the use of other media besides first-class mail for a follow-up notification.

[60 FR 17272, Apr. 5, 1995]

PART 578—CIVIL AND CRIMINAL PENALTIES

Sec.

578.1 Scope.
578.2 Purpose.
578.3 Applicability.
578.4 Definitions.
578.5 Inflationary adjustment of civil penalties.
578.6 Civil penalties for violations of specified provisions of Title 49 of the United States Code.
578.7 Criminal safe harbor provision.

AUTHORITY: Pub. L. 101–410, Pub. L. 104–134, Pub. L. 106–414, 49 U.S.C. 30165, 49 U.S.C. 30170, 30505, 32308, 32309, 32507, 32709, 32710, 32912, and 33115; delegation of authority at 49 CFR 1.50.

SOURCE: 62 FR 5169, Feb. 4, 1997, unless otherwise noted.

§ 578.1 Scope.

This part specifies the civil penalties for violations of statutes administered by the National Highway Traffic Safety Administration, as adjusted for inflation. This part also sets forth the requirements regarding the reasonable time and the manner of correction for a person seeking safe harbor protection from criminal liability under 49 U.S.C. 30170(a).

[65 FR 81418, Dec. 26, 2000]

§ 578.2 Purpose.

One purpose of this part is to preserve the remedial impact of civil penalties and to foster compliance with the law by specifying the civil penalties for statutory violations, as adjusted for inflation. The other purpose

of this part is to set forth the requirements regarding the reasonable time and the manner of correction for a person seeking safe harbor protection from criminal liability under 49 U.S.C. 30170(a).

[65 FR 81418, Dec. 26, 2000]

§ 578.3 Applicability.

This part applies to civil penalties for violations of Chapters 301, 305, 323, 325, 327, 329, and 331 of Title 49 of the United States Code. This part also applies to the criminal penalty safe harbor provision of section 30170 of Title 49 of the United States Code.

[65 FR 81419, Dec. 26, 2000]

§ 578.4 Definitions.

All terms used in this part that are defined in sections 30102, 30501, 32101, 32702, 32901, and 33101 of Title 49 of the United States Code are used as defined in the appropriate statute.

Administrator means the Administrator of the National Highway Traffic Safety Administration.

Civil penalty means any non-criminal penalty, fine, or other sanction that:

(1) Is for a specific monetary amount as provided by Federal law, or has a maximum amount provided for by Federal law; and

(2) Is assessed, compromised, collected, or enforced by NHTSA pursuant to Federal law.

NHTSA means the National Highway Traffic Safety Administration.

[62 FR 5169, Feb. 4, 1997, as amended at 65 FR 81419, Dec. 26, 2000]

§ 578.5 Inflationary adjustment of civil penalties.

The civil penalties set forth in this part continue in effect until adjusted by the Administrator. At least once every four years, the Administrator shall review the amount of these civil penalties and will, if appropriate, adjust them by rule.

§ 578.6 Civil penalties for violations of specified provisions of Title 49 of the United States Code.

(a)(1) *Motor vehicle safety*. A person who violates any of sections 30112, 30115, 30117 through 30122, 30123(d), 30125(c), 30127, or 30141 through 30147 of Title 49 of the United States Code or a regulation prescribed under any of those sections is liable to the United States Government for a civil penalty of not more than $5,000 for each violation. A separate violation occurs for each motor vehicle or item of motor vehicle equipment and for each failure or refusal to allow or perform an act required by any of those sections. The maximum civil penalty under this paragraph for a related series of violations is $15,000,000.

(2) *Section 30166*. A person who violates section 30166 of Title 49 of the United States Code or a regulation prescribed under that section is liable to the United States Government for a civil penalty for failing or refusing to allow or perform an act required under that section or regulation. The maximum penalty under this paragraph is $5,000 per violation per day. The maximum penalty under this paragraph for a related series of daily violations is $15,000,000.

(b) *National Automobile Title Information System*. An individual or entity violating 49 U.S.C. Chapter 305 is liable to the United States Government for a civil penalty of not more than $1,100 for each violation.

(c) *Bumper standards*. (1) A person that violates 49 U.S.C. § 32506(a) is liable to the United States Government for a civil penalty of not more than $1,100 for each violation. A separate violation occurs for each passenger motor vehicle or item of passenger motor vehicle equipment involved in a violation of 49 U.S.C. 32506(a)(1) or (4)—

(i) That does not comply with a standard prescribed under 49 U.S.C. 32502, or

(ii) For which a certificate is not provided, or for which a false or misleading certificate is provided, under 49 U.S.C. 32504.

(2) The maximum civil penalty under this paragraph (c) for a related series of violations is $925,000.

(d) *Consumer information regarding crashworthiness and damage susceptibility*. A person that violates 49 U.S.C. 32308(a) is liable to the United States Government for a civil penalty of not more than $1,100 for each violation. Each failure to provide information or comply with a regulation in violation

of 49 U.S.C. 32308(a) is a separate violation. The maximum penalty under this paragraph for a related series of violations is $450,000.

(e) *Country of origin content labeling.* A manufacturer of a passenger motor vehicle distributed in commerce for sale in the United States that willfully fails to attach the label required under 49 U.S.C. 32304 to a new passenger motor vehicle that the manufacturer manufactures or imports, or a dealer that fails to maintain that label as required under 49 U.S.C. 32304, is liable to the United States Government for a civil penalty of not more than $1,100 for each violation. Each failure to attach or maintain that label for each vehicle is a separate violation.

(f) *Odometer tampering and disclosure.* (1) A person that violates 49 U.S.C. Chapter 327 or a regulation prescribed or order issued thereunder is liable to the United States Government for a civil penalty of not more than $2,200 for each violation. A separate violation occurs for each motor vehicle or device involved in the violation. The maximum civil penalty under this paragraph for a related series of violations is $120,000.

(2) A person that violates 49 U.S.C. Chapter 327 or a regulation prescribed or order issued thereunder, with intent to defraud, is liable for three times the actual damages or $2,000, whichever is greater.

(g) *Vehicle theft protection.* (1) A person that violates 49 U.S.C. 33114(a)(1)-(4) is liable to the United States Government for a civil penalty of not more than $1,100 for each violation. The failure of more than one part of a single motor vehicle to conform to an applicable standard under 49 U.S.C. 33102 or 33103 is only a single violation. The maximum penalty under this paragraph for a related series of violations is $300,000.

(2) A person that violates 49 U.S.C. 33114(a)(5) is liable to the United States government for a civil penalty of not more than $120,000 a day for each violation.

(h) *Automobile fuel economy.* (1) A person that violates 49 U.S.C. 32911(a) is liable to the United States Government for a civil penalty of not more than $11,000 for each violation. A separate violation occurs for each day the violation continues.

(2) Except as provided in 49 U.S.C. 32912(c), a manufacturer that violates a standard prescribed for a model year under 49 U.S.C. 32902 is liable to the United States Government for a civil penalty of $5.50 multiplied by each .1 of a mile a gallon by which the applicable average fuel economy standard under that section exceeds the average fuel economy—

(i) Calculated under 49 U.S.C. 32904(a)(1)(A) or (B) for automobiles to which the standard applies manufactured by the manufacturer during the model year;

(ii) Multiplied by the number of those automobiles; and

(iii) Reduced by the credits available to the manufacturer under 49 U.S.C. 32903 for the model year.

[62 FR 5169, Feb. 4, 1997, as amended at 64 FR 37878, July 14, 1999; 65 FR 68110, Nov. 14, 2000; 66 FR 41151, Aug. 7, 2001]

§ 578.7 Criminal safe harbor provision.

(a) *Scope.* This section sets forth the requirements regarding the reasonable time and the manner of correction for a person seeking safe harbor protection from criminal liability under 49 U.S.C. 30170(a)(2), which provides that a person described in 49 U.S.C. 30170(a)(1) is not subject to criminal penalties thereunder if:

(1) At the time of the violation, such person does not know that the violation would result in an accident causing death or serious bodily injury; and

(2) The person corrects any improper reports or failure to report, with respect to reporting requirements of 49 U.S.C. 30166, within a reasonable time.

(b) *Reasonable time.* A correction is considered to have been performed within a reasonable time if the person seeking protection from criminal liability makes the correction to any improper (i.e., incorrect, incomplete, or misleading) report not more than thirty (30) calendar days after the date of the report to the agency and corrects any failure to report not more than thirty (30) calendar days after the report was due to be sent to or received by the agency, as the case may be, pursuant to 49 U.S.C. 30166, including a regulation, requirement, request or

order issued thereunder. In order to meet these reasonable time requirements, all submissions required by this section must be received by NHTSA within the time period specified in this paragraph, and not merely mailed or otherwise sent within that time period.

(c) *Sufficient manner of correction.* Each person seeking safe harbor protection from criminal penalties under 49 U.S.C. 30170(a)(2) must comply with the following with respect to each improper report and failure to report for which safe harbor protection is sought:

(1) Sign and submit to NHTSA a dated document identifying:

(i) Each previous improper report (e.g., informational statement and document submission), and each failure to report as required under 49 U.S.C. 30166, including a regulation, requirement, request or order issued thereunder, for which protection is sought, and

(ii) The specific predicate under which the improper or omitted report should have been provided (e.g., the report was required by a specified regulation, NHTSA Information Request, or NHTSA Special Order).

(2) Submit the complete and correct information that was required to be submitted but was improperly submitted or was not previously submitted, including relevant documents that were not previously submitted, or, if the person cannot do so, provide a detailed description of that information and/or the content of those documents and the reason why the individual cannot provide them to NHTSA (e.g., the information or documents are not in the individual's possession or control).

(3) For a corporation, the submission must be signed by an authorized person (ordinarily, the individual officer or employee who submitted the improper report or who should have provided the report that the corporation failed to submit on behalf of the company, or someone in the company with authority to make such a submission).

(4) Submissions must be made by a means which permits the sender to verify promptly that the report was in fact received by NHTSA and the day it was received by NHTSA.

(5) Submit the report to Chief Counsel (NCC–10), National Highway Traffic Safety Administration, Room 5219, 400 Seventh Street, SW., Washington, DC 20590.

[65 FR 81419, Dec. 26, 2000, as amended at 66 FR 38384, July 24, 2001]

PART 579—REPORTING OF INFORMATION AND COMMUNICATIONS ABOUT POTENTIAL DEFECTS

Subpart A—General

Sec.
579.1 Scope.
579.2 Purpose.
579.3 Application.
579.4 Terminology.
579.5 Notices, bulletins, customer satisfaction campaigns, consumer advisories, and other communications.
579.6 Address for submitting reports and other information.
579.7–579.10 [Reserved]

Subpart B—Reporting of Defects in Motor Vehicles and Motor Vehicle Equipment in Countries Other Than the United States

579.11–579.20 [Reserved]

Subpart C—Reporting of Early Warning Information

579.21 Reporting requirements for manufacturers of 500 or more light vehicles annually.
579.22 Reporting requirements for manufacturers of 500 or more medium-heavy vehicles and buses annually.
579.23 Reporting requirements for manufacturers of 500 or more motorcycles annually.
579.24 Reporting requirements for manufacturers of 500 or more trailers annually.
579.25 Reporting requirements for manufacturers of child restraint systems.
579.26 Reporting requirements for manufacturers of tires.
579.27 Reporting requirements for manufacturers of fewer than 500 vehicles annually, for manufacturers of original equipment, and for manufacturers of replacement equipment other than child restraint systems and tires.
579.28 Due date of reports and other miscellaneous provisions.
579.29 Manner of reporting.

AUTHORITY: Sec. 3, Pub. L. 106–414, 114 Stat. 1800 (49 U.S.C. 30102–103, 30112, 30117–121, 30166–167); delegation of authority at 49 CFR 1.50.

SOURCE: 67 FR 45873, July 10, 2002, unless otherwise noted.

Subpart A—General

§ 579.1 Scope.

This part sets forth requirements for reporting information and submitting documents that may help identify defects related to motor vehicle safety and noncompliances with Federal motor vehicle safety standards, including reports of foreign safety recalls and other safety-related campaigns conducted outside the United States under 49 U.S.C. 30166(l), early warning information under 49 U.S.C. 30166(m), and copies of communications about defects and noncompliances under 49 U.S.C. 30166(f).

§ 579.2 Purpose.

The purpose of this part is to enhance motor vehicle safety by specifying information and documents that manufacturers of motor vehicles and motor vehicle equipment must provide to NHTSA with respect to possible safety-related defects and noncompliances in their products.

§ 579.3 Application.

(a) This part applies to all manufacturers of motor vehicles and motor vehicle equipment with respect to all motor vehicles and motor vehicle equipment that have been offered for sale, sold, or leased in the United States by the manufacturer, including any parent corporation, any subsidiary or affiliate of the manufacturer, or any subsidiary or affiliate of any parent corporation, and with respect to all motor vehicles and motor vehicle equipment that have been offered for sale, sold, or leased in a foreign country by the manufacturer, including any parent corporation, any subsidiary or affiliate of the manufacturer, or any subsidiary or affiliate of any parent corporation, and are substantially similar to any motor vehicles or motor vehicle equipment that have been offered for sale, sold, or leased in the United States.

(b) In the case of any report required under subpart C of this part, compliance by the fabricating manufacturer, the importer, the brand name owner, or a parent or United States subsidiary of such fabricator, importer, or brand name owner of the motor vehicle or motor vehicle equipment, shall be considered compliance by all persons.

(c) With regard to any information required to be reported under subpart C of this part, an entity covered under paragraph (a) of this section need only review information and systems where information responsive to subpart C of this part is kept in the usual course of business.

§ 579.4 Terminology.

(a) *Statutory terms*. The terms *dealer*, *defect*, *distributor*, *motor vehicle*, *motor vehicle equipment*, and *State* are used as defined in 49 U.S.C. 30102.

(b) *Regulatory terms*. The term *Vehicle Identification Number (VIN)* is used as defined in § 565.3(o) of this chapter. The terms *bus*, *Gross Vehicle Weight Rating (GVWR)*, *motorcycle*, *multipurpose passenger vehicle*, *passenger car*, *trailer*, and *truck* are used as defined in § 571.3(b) of this chapter. The term *Booster seat* is used as defined in S4 of § 571.213 of this chapter. The term *Tire Identification Number (TIN)* is the ''tire identification number'' described in § 574.5 of this chapter. The term *Limited production tire* is used as defined in § 575.104(c)(2) of this chapter.

(c) *Other terms*. The following terms apply to this part:

Administrator means the Administrator of the National Highway Traffic Safety Administration (NHTSA), or the Administrator's delegate.

Affiliate means, in the context of an affiliate of or person affiliated with a specified person, a person that directly, or indirectly through one or more intermediates, controls or is controlled by, or is under common control with, the person specified. The term person usually is a corporation.

Air bag means an air bag or other automatic occupant restraint device (other than a ''seat belt'' as defined in this subpart) installed in a motor vehicle that restrains an occupant in the event of a vehicle crash without requiring any action on the part of the occupant to obtain the benefit of the restraint. This term includes inflatable restraints (front and side air bags), knee bolsters, and any other automatic

restraining device that may be developed that does not include a restraining belt or harness. This term also includes all air bag-related components, such as the inflator assembly, air bag module, control module, crash sensors and all hardware and software associated with the air bag. This term includes all associated switches, control units, connective elements (such as wiring harnesses, hoses, piping, etc.), and mounting elements (such as brackets, fasteners, etc.).

Base means the detachable bottom portion of a child restraint system that may remain in the vehicle to provide a base for securing the system to a seat in a motor vehicle.

Bead means all the materials in a tire below the sidewalls in the rim contact area, including bead rubber components, the bead bundle and rubber coating if present, the body ply and its turn-up including the rubber coating, rubber, fabric, or metallic reinforcing materials, and the inner-liner rubber under the bead area.

Brand name owner means a person that markets a motor vehicle or motor vehicle equipment under its own trade name whether or not it is the fabricator or importer of the vehicle or equipment.

Buckle and restraint harness means the components of a child restraint system that are intended to restrain a child seated in such a system, including the belt webbing, buckles, buckle release mechanism, belt adjusters, belt positioning devices, and shields.

Child restraint system means any system that meets, or is offered for sale in the United States as meeting, any definition in S4 of §571.213 of this chapter, or that is offered for sale as a child restraint system in a foreign country.

Claim means a written request or written demand for relief, including money or other compensation, assumption of expenditures, or equitable relief, related to a motor vehicle crash, accident, the failure of a component or system of a vehicle or an item of motor vehicle equipment, or a fire originating in or from a motor vehicle or a substance that leaked from a motor vehicle. Claim includes, but is not limited to, a demand in the absence of a lawsuit, a complaint initiating a lawsuit, an assertion or notice of litigation, a settlement, covenant not to sue or release of liability in the absence of a written demand, and a subrogation request. A claim exists regardless of any denial or refusal to pay it, and regardless of whether it has been settled or resolved in the manufacturer's favor. The existence of a claim may not be conditioned on the receipt of anything beyond the document(s) stating a claim. Claim does not include demands related to asbestos exposure, to emissions of volatile organic compounds from vehicle interiors, or to end-of-life disposal of vehicles, parts or components of vehicles, equipment, or parts or components of equipment.

Common green tires means tires that are produced to the same internal specifications but that have, or may have, different external characteristics and may be sold under different tire line names.

Consumer complaint means a communication of any kind made by a consumer (or other person) to or with a manufacturer addressed to the company, an officer thereof or an entity thereof that handles consumer matters, a manufacturer website that receives consumer complaints, a manufacturer electronic mail system that receives such information at the corporate level, or that are otherwise received by a unit within the manufacturer that receives consumer inquiries or complaints, including telephonic complaints, expressing dissatisfaction with a product, or relating the unsatisfactory performance of a product, or any actual or potential defect in a product, or any event that allegedly was caused by any actual or potential defect in a product, but not including a claim of any kind or a notice involving a fatality or injury.

Customer satisfaction campaign, consumer advisory, recall, or other activity involving the repair or replacement of motor vehicles or motor vehicle equipment means any communication by a manufacturer to, or made available to, more than one dealer, distributor, lessor, lessee, other manufacturer, or owner, whether in writing or by electronic means, relating to repair, replacement, or modification of a vehicle, component of a vehicle, item of equipment, or

a component thereof, the manner in which a vehicle or child restraint system is to be maintained or operated (excluding promotional and marketing materials, customer satisfaction surveys, and operating instructions or owner's manuals that accompany the vehicle or child restraint system at the time of first sale); or advice or direction to a dealer or distributor to cease the delivery or sale of specified models of vehicles or equipment.

Dealer field report means a field report from a dealer or authorized service facility of a manufacturer of motor vehicles or motor vehicle equipment.

Electrical system means any electrical or electronic component of a motor vehicle that is not included in one of the other reporting categories enumerated in subpart C of this part, and specifically includes the battery, battery cables, alternator, fuses, and main body wiring harnesses of the motor vehicle and the ignition system, including the ignition switch and starter motor. The term also includes all associated switches, control units, connective elements (such as wiring harnesses, hoses, piping, etc.), and mounting elements (such as brackets, fasteners, etc.).

Engine and engine cooling means the component (e.g., motor) of a motor vehicle providing motive power to the vehicle, and includes the exhaust system (including the exhaust emission system), the engine control unit, engine lubrication system, and the underhood cooling system for that engine. This term also includes all associated switches, control units, connective elements (such as wiring harnesses, hoses, piping, etc.), and mounting elements (such as brackets, fasteners, etc.).

Equipment comprises original and replacement equipment: (1) *Original equipment* means an item of motor vehicle equipment (other than a tire) that was installed in or on a motor vehicle at the time of its delivery to the first purchaser if the item of equipment was installed on or in the motor vehicle at the time of its delivery to a dealer or distributor for distribution; or the item of equipment was installed by the dealer or distributor with the express authorization of the motor vehicle manufacturer.

(2) *Replacement equipment* means motor vehicle equipment other than original equipment, and tires.

Exterior lighting mean all the exterior lamps (including any interior-mounted center highmounted stop lamp if mounted in the interior of a vehicle), lenses, reflectors, and associated equipment of a motor vehicle, including all associated switches, control units, connective elements (such as wiring harnesses, piping, etc.), and mounting elements (such as brackets, fasteners, etc.).

Field report means a communication in writing, including communications in electronic form, from an employee or representative of a manufacturer of motor vehicles or motor vehicle equipment, a dealer or authorized service facility of such manufacturer, or by an entity that owns or operates a fleet, to a manufacturer, regarding the failure, malfunction, lack of durability, or other performance problem of a motor vehicle or motor vehicle equipment, or any part thereof, produced for sale by that manufacturer, regardless of whether verified or assessed to be lacking in merit, but does not include a document contained in a litigation file that was created after the date of the filing of a civil complaint that relates to the specific vehicle, component, or system at issue in the litigation.

Fire means combustion or burning of any material in a vehicle as evidenced by, but not limited to, flame, smoke, sparks, or smoldering.

Fleet means more than ten motor vehicles of the same make, model, and model year.

Fuel system means all components of a motor vehicle used to receive and store fuel, and to transfer fuel between the vehicle's fuel storage, engine, or fuel emission systems. This term includes, but is not limited to, the fuel tank and filler cap, neck, and pipe, along with associated piping, hoses, and clamps, the fuel pump, fuel lines, connectors from the fuel tank to the engine, the fuel injection/carburetion system (including fuel injector rails and injectors), and the fuel vapor recovery system(s), canister(s), and vent

lines. The term also includes all associated switches, control units, connective elements (such as wiring harnesses, hoses, piping, etc.), and mounting elements (such as brackets, fasteners, etc.).

Good will means the repair or replacement of a motor vehicle or item of motor vehicle equipment, including labor, paid for by the manufacturer, at least in part, when the repair or replacement is not covered under warranty, or under a safety recall reported to NHTSA under part 573 of this chapter.

Incomplete light vehicle means an incomplete vehicle as defined in §568.3 of this chapter which, when completed, will be a light vehicle.

Integrated child restraint system means a factory-installed built-in child restraint system as defined in S4 of §571.213 of this chapter and includes any factory-authorized built-in child restraint system.

Latch means a latching, locking, or linking system of a motor vehicle and all its components fitted to a vehicle's exterior doors, rear hatch, liftgate, tailgate, trunk, or hood. This term also includes, but is not limited to, devices for the remote operation of a latching device such as remote release cables (and associated components), electric release devices, or wireless control release devices, and includes all components covered in FMVSS No. 206. This term also includes all associated switches, control units, connective elements (such as wiring harnesses, hoses, piping, etc.), and mounting elements (such as brackets, fasteners, etc.).

Light vehicle means any motor vehicle, except a bus, motorcycle, or trailer, with a GVWR of 10,000 lbs or less.

Make means a name that a manufacturer applies to a group of vehicles.

Manufacturer means a person manufacturing or assembling motor vehicles or motor vehicle equipment, or importing motor vehicles or motor vehicle equipment for resale. This term includes any parent corporation, any subsidiary or affiliate, and any subsidiary or affiliate of a parent corporation of such a person.

Medium-heavy vehicle means any motor vehicle, except a trailer, with a GVWR greater than 10,000 lbs.

Minimal specificity means:

(1) For a vehicle, the make, model, and model year,

(2) For a child seat, the manufacturer and the model (either the model name or model number),

(3) For a tire, the manufacturer, tire line, and tire size, and

(4) For other motor vehicle equipment, the manufacturer and, if there is a model or family of models identified on the item of equipment, the model name or model number.

Model means a name that a manufacturer of motor vehicles applies to a family of vehicles within a make which have a degree of commonality in construction, such as body, chassis or cab type. For equipment, it means the name that its manufacturer uses to designate it.

Model year means the year that a manufacturer uses to designate a discrete model of vehicle, irrespective of the calendar year in which the vehicle was manufactured; if a year is not so designated, it means the year the vehicle was produced. For equipment, it means the year that the item was produced.

Notice means a document, other than a media article, that does not include a demand for relief, and that a manufacturer receives from a person other than NHTSA.

Parking brake means a mechanism installed in a motor vehicle which is designed to prevent the movement of a stationary motor vehicle, including all associated switches, control units, connective elements (such as wiring harnesses, hoses, piping, etc.), and mounting elements (such as brackets, fasteners, etc.).

Platform means the basic structure of a vehicle including, but not limited to, the majority of the floorpan or undercarriage, and elements of the engine compartment. The term includes a structure that a manufacturer designates as a platform. A group of vehicles sharing a common structure or chassis shall be considered to have a common platform regardless of whether such vehicles are of the same type, are of the same make, or are sold by the same manufacturer.

Power train means the components or systems of a motor vehicle which

transfer motive power from the engine to the wheels, including the transmission (manual and automatic), gear selection devices and associated linkages, clutch, constant velocity joints, transfer case, driveline, differential(s), and all driven axle assemblies. This term includes all associated switches, control units, connective elements (such as wiring harnesses, hoses, piping, etc.), and mounting elements (such as brackets, fasteners, etc.).

Property damage means physical injury to tangible property.

Property damage claim means a claim for property damage, excluding that part of a claim, if any, pertaining solely to damage to a component or system of a vehicle or an item of equipment itself based on the alleged failure or malfunction of the component, system, or item, and further excluding matters addressed under warranty.

Rear-facing infant seat means a child restraint system that positions a child to face in the direction opposite to the normal direction of travel of the motor vehicle.

Reporting period means a calendar quarter of a year, unless otherwise stated.

Rollover means a single-vehicle crash in which a motor vehicle rotates on its longitudinal axis to at least 90 degrees, regardless of whether it comes to rest on its wheels.

Seats means all components of a motor vehicle that are subject to FMVSS Nos. 202, 207, and S9 of 209, including all electrical and electronic components within the seat that are related to seat positioning, heating, and cooling. This term also includes all associated switches, control units, connective elements (such as wiring harnesses, hoses, piping, etc.), and mounting elements (such as brackets, fasteners, etc.).

Seat belts means any belt system, other than an air bag, that may or may not require the occupant to latch, fasten, or secure the components of the seat belt/webbing based restraint system to ready its use for protection of the occupant in the event of a vehicle crash. This term includes the webbing, buckle, anchorage, retractor, belt pretensioner devices, load limiters, and all components, hardware and software associated with an automatic or manual seat belt system addressed by FMVSS No. 209 or 210. This term also includes integrated child restraint systems in vehicles, and includes any device (and all components of that device), installed in a motor vehicle in accordance with FMVSS No. 213, which is designed for use as a safety restraint device for a child too small to use a vehicle's seat belts. This term includes all vehicle components installed in accordance with FMVSS No. 225. This term also includes all associated switches, control units, connective elements (such as wiring harnesses, hoses, piping, etc.), and mounting elements (such as brackets, fasteners, etc.).

Seat shell means the portion of a child restraint system that provides the structural shape, form and support for the system, and for other components of the system such as belt attachment points, and anchorage points to allow the system to be secured to a passenger seat in a motor vehicle, but not including a shield.

Service brake system means all components of the service braking system of a motor vehicle intended for the transfer of braking application force from the operator to the wheels of a vehicle, including the foundation braking system, such as the brake pedal, master cylinder, fluid lines and hoses, braking assist components, brake calipers, wheel cylinders, brake discs, brake drums, brake pads, brake shoes, and other related equipment installed in a motor vehicle in order to comply with FMVSS Nos. 105, 121, 122, or 135. This term also includes systems and devices for automatic control of the brake system such as antilock braking, traction control, stability control, and enhanced braking. The term includes all associated switches, control units, connective elements (such as wiring harnesses, hoses, piping, etc.), and mounting elements (such as brackets, fasteners, etc.).

Sidewall means the area of a tire between the tread and the bead area, including the sidewall rubber components, the body ply and its coating rubber under the side area, and the innerliner rubber under the body ply in the side area.

SKU (Stock Keeping Unit) means the alpha-numeric designation assigned by a manufacturer to a tire product.

Steering system means all steering control system components, including the steering system mechanism and its associated hardware, the steering wheel, steering column, steering shaft, linkages, joints (including tie-rod ends), steering dampeners, and power steering assist systems. This term includes a steering control system as defined by FMVSS No. 203 and any subsystem or component of a steering control system, including those components defined in FMVSS No. 204. This term also includes all associated switches, control units, connective elements (such as wiring harnesses, hoses, piping, etc.), and mounting elements (such as brackets, fasteners, etc.).

Structure means any part of a motor vehicle that serves to maintain the shape and size of the vehicle, including the frame, the floorpan, the body, bumpers, doors, tailgate, hatchback, trunk lid, hood, and roof. The term also includes all associated mounting elements (such as brackets, fasteners, etc.).

Suspension system means all components and hardware associated with a motor vehicle suspension system, including the associated control arms, steering knuckles, spindles, joints, bushings, ball joints, springs, shock absorbers, stabilizer (anti sway) bars, and bearings that are designed to minimize the impact on the vehicle chassis of shocks from road surface irregularities that may be transmitted through the wheels, and to provide stability when the vehicle is being operated through a range of speed, load, and dynamic conditions. The term also includes all electronic control systems and mechanisms for active suspension control, as well as all associated components such as switches, control units, connective elements (such as wiring harnesses, hoses, piping, etc.), and mounting elements (such as brackets, fasteners, etc.).

Tire means an item of motor vehicle equipment intended to interface between the road and a motor vehicle. The term includes all the tires of a vehicle, including the spare tire. This term also includes the tire inflation valves, tubes, and tire pressure monitoring and regulating systems, as well as all associated switches, control units, connective elements (such as wiring harnesses, hoses, piping, etc.), and mounting elements (such as brackets, fasteners, etc.).

Tire line means the entire name used by a tire manufacturer to designate a tire product including all prefixes and suffixes as they appear on the sidewall of a tire.

Trailer hitch means all coupling systems, devices, and components thereof, designed to join or connect any two motor vehicles. This term also includes all associated switches, control units, connective elements (such as wiring harnesses, hoses, piping, etc.), and mounting elements (such as brackets, fasteners, etc.).

Tread (also known as crown) means all materials in the tread area of a tire including the rubber that makes up the tread, the sub-base rubber, when present, between the tread base and the top of the belts, the belt material, either steel and/or fabric, and the rubber coating of the same including any rubber inserts, the body ply and its coating rubber under the tread area of the tire, and the inner-liner rubber under the tread.

Type means, in the context of a light vehicle, a vehicle certified by its manufacturer pursuant to §567.4(g)(7) of this chapter as a passenger car, multipurpose passenger vehicle, or truck, or a vehicle identified by its manufacturer as an incomplete vehicle pursuant to §568.4 of this chapter. In the context of a child restraint system, it means the category of child restraint system selected from one of the following: rear-facing infant seat, booster seat, or other.

Vehicle speed control means the systems and components of a motor vehicle that control vehicle speed either by command of the operator or by automatic control, including, but not limited, to the accelerator pedal, linkages, cables, springs, speed control devices (such as cruise control) and speed limiting devices. This term includes, but is not limited to the items addressed by FMVSS No. 124 and all associated switches, control units, connective elements (such as wiring harnesses, hoses,

piping, etc.), and mounting elements (such as brackets, fasteners, etc.).

Visibility means the systems and components of a motor vehicle through which a driver views the surroundings of the vehicle including windshield, side windows, back window, and rear view mirrors, and systems and components used to wash and wipe windshields and back windows. This term includes those vehicular systems and components that can affect the ability of the driver to clearly see the roadway and surrounding area, such as the systems and components identified in FMVSS Nos. 103, 104, and 111. This term also includes the defogger/defroster system, the heater core, blower fan, windshield wiper systems, mirrors, windows and glazing material, heads-up display (HUD) systems, and exterior view-based television systems, but does not include exterior lighting systems which are defined under ''Lighting.'' This term includes all associated switches, control units, connective elements (such as wiring harnesses, hoses, piping, etc.), and mounting elements (such as brackets, fasteners, etc.).

Warranty means any written affirmation of fact or written promise made in connection with the sale or lease of a motor vehicle or motor vehicle equipment by a manufacturer to a buyer or lessee that relates to the nature of the material or workmanship and affirms or promises that such material or workmanship is defect free or will meet a specified level of performance over a specified period of time (including any extensions of such specified period of time), or any undertaking in writing in connection with the sale or lease by a manufacturer of a motor vehicle or item of motor vehicle equipment to refund, repair, replace, or take other remedial action with respect to such product in the event that such product fails to meet the specifications set forth in the undertaking.

Warranty adjustment means any payment or other restitution, such as, but not limited to, replacement, repair, credit, or cash refund, made by a tire manufacturer to a consumer or to a dealer, in reimbursement for payment or other restitution to a consumer, pursuant to a warranty program offered by the manufacturer.

Warranty claim means any claim paid by a manufacturer, including provision of a credit, pursuant to a warranty program, an extended warranty program, or good will. It does not include claims for reimbursement for costs or expenses for work performed to remedy a safety-related defect or noncompliance reported to NHTSA under part 573 of this chapter, or in connection with an emissions-related recall under the Clean Air Act.

Wheel means the assembly or component of a motor vehicle to which a tire is mounted. The term includes any item of motor vehicle equipment used to attach the wheel to the vehicle, including inner cap nuts and the wheel studs, bolts, and nuts.

(d) *Terms related to foreign claims.* For purposes of subpart C of this part:

(1) A motor vehicle sold or in use outside the United States is identical or substantially similar to a motor vehicle sold or offered for sale in the United States if—

(i) Such a vehicle has been sold in Canada or has been certified as complying with the Canadian Motor Vehicle Safety Standards;

(ii) Such a vehicle is listed in the VSP or VSA columns of Appendix A to part 593 of this chapter;

(iii) Such a vehicle is manufactured in the United States for sale in a foreign country; or

(iv) Such a vehicle uses the same vehicle platform as a vehicle sold or offered for sale in the United States.

(2) An item of motor vehicle equipment sold or in use outside the United States is identical or substantially similar to equipment sold or offered for sale in the United States if such equipment and the equipment sold or offered for sale in the United States have one or more components or systems that are the same, and the component or system performs the same function in vehicles or equipment sold or offered for sale in the United States, regardless of whether the part numbers are identical.

(3) A tire sold or in use outside the United States is substantially similar to a tire sold or offered for sale in the United States if it has the same size,

speed rating, load index, load range, number of plies and belts, and similar ply and belt construction and materials, placement of components, and component materials, irrespective of plant of manufacture or tire line.

§ 579.5 Notices, bulletins, customer satisfaction campaigns, consumer advisories, and other communications.

(a) Each manufacturer shall furnish to NHTSA a copy of all notices, bulletins, and other communications (including those transmitted by computer, telefax, or other electronic means and including warranty and policy extension communiques and product improvement bulletins) other than those required to be submitted pursuant to § 573.5(c)(9) of this chapter, sent to more than one manufacturer, distributor, dealer, lessor, lessee, owner, or purchaser, in the United States, regarding any defect in its vehicles or items of equipment (including any failure or malfunction beyond normal deterioration in use, or any failure of performance, or any flaw or unintended deviation from design specifications), whether or not such defect is safety-related.

(b) Each manufacturer shall furnish to NHTSA a copy of each communication relating to a customer satisfaction campaign, consumer advisory, recall, or other safety activity involving the repair or replacement of motor vehicles or equipment, that the manufacturer issued to, or made available to, more than one dealer, distributor, lessor, lessee, other manufacturer, owner, or purchaser, in the United States.

(c) If a notice or communication is required to be submitted under both paragraphs (a) and (b) of this section, it need only be submitted once.

(d) Each copy shall be in readable form and shall be submitted not more than five working days after the end of the month in which it was issued. Each submission shall be accompanied by a document identifying each communication in the submission by name or subject matter and date.

§ 579.6 Address for submitting reports and other information.

Information, reports, and documents required to be submitted to NHTSA pursuant to this part, if submitted by mail, must be addressed to the Associate Administrator for Enforcement, National Highway Traffic Safety Administration (NHTSA), 400 7th Street, SW., Washington, D.C. 20590. Information, documents, and reports that are submitted to NHTSA's early warning data repository shall be submitted in accordance with § 579.29 of this part. Submissions must be made by a means that permits the sender to verify that the report was in fact received by NHTSA and the day it was received by NHTSA.

§§ 579.7–579.10 [Reserved]

Subpart B—Reporting of Defects in Motor Vehicles and Motor Vehicle Equipment in Countries Other Than the United States

§§ 579.11–579.20 [Reserved]

Subpart C—Reporting of Early Warning Information

§ 579.21 Reporting requirements for manufacturers of 500 or more light vehicles annually.

For each reporting period, a manufacturer whose aggregate number of light vehicles manufactured for sale, offered for sale, imported, or sold, in the United States, during the calendar year of the reporting period or during each of the prior two calendar years is 500 or more shall submit the information described in this section. For paragraphs (a) and (c) of this section, the manufacturer shall submit information separately with respect to each make, model, and model year of light vehicle manufactured during the reporting period and the nine model years prior to the earliest model year in the reporting period, including models no longer in production.

(a) *Production information.* Information that states the manufacturer's name, the quarterly reporting period, the make, the model, the model year,

the type, the platform, and the production. The production shall be stated as either the cumulative production of the current model year to the end of the reporting period, or the total model year production for each model year for which production has ceased.

(b) *Information on incidents involving death or injury*. For all light vehicles less than ten calendar years old at the beginning of the reporting period:

(1) A report on each incident involving one or more deaths or injuries occurring in the United States that is identified in a claim against and received by the manufacturer or in a notice received by the manufacturer which notice alleges or proves that the death or injury was caused by a possible defect in the manufacturer's vehicle, together with each incident involving one or more deaths occurring in a foreign country that is identified in a claim against and received by the manufacturer involving the manufacturer's vehicle, if that vehicle is identical or substantially similar to a vehicle that the manufacturer has offered for sale in the United States. The report shall be submitted as a report on light vehicles and organized such that incidents are reported alphabetically by make, within each make alphabetically by model, and within each model chronologically by model year.

(2) For each incident described in paragraph (b)(1) of this section, the manufacturer shall separately report the make, model, model year, and VIN of the vehicle, the incident date, the number of deaths, the number of injuries for incidents occurring in the United States, the State or foreign country where the incident occurred, each system or component of the vehicle that allegedly contributed to the incident, and whether the incident involved a fire or rollover, coded as follows: 01 steering system, 02 suspension system, 03 service brake system, 05 parking brake, 06 engine and engine cooling system, 07 fuel system, 10 power train, 11 electrical system, 12 exterior lighting, 13 visibility, 14 air bags, 15 seat belts, 16 structure, 17 latch, 18 vehicle speed control, 19 tires, 20 wheels, 22 seats, 23 fire, 24 rollover, 98 where a system or component not covered by categories 01 through 22 is specified in the claim or notice, and 99 where no system or component of the vehicle is specified in the claim or notice. If an incident involves more than one such code, each shall be reported separately in the report with a limit of five codes to be included.

(c) *Numbers of property damage claims, consumer complaints, warranty claims, and field reports*. Separate reports on the numbers of those property damage claims, consumer complaints, warranty claims, and field reports which involve the systems and components that are specified in codes 01 through 22 in paragraph (b)(2) of this section, or a fire (code 23), or rollover (code 24). Each such report shall state, separately by each such code, the number of such property damage claims, consumer complaints, warranty claims, or field reports, respectively, that involves the systems or components or fire or rollover indicated by the code. If an underlying property damage claim, consumer complaint, warranty claim, or field report involves more than one such code, each shall be reported separately in the report with no limit on the number of codes to be included. No reporting is necessary if the system or component involved is not specified in such codes, and the incident did not involve a fire or rollover.

(d) *Copies of field reports*. For all light vehicles less than ten calendar years old as of the beginning of the reporting period, a copy of each field report (other than a dealer report) involving one or more of the systems or components identified in paragraph (b)(2) of this section, or fire, or rollover, containing any assessment of an alleged failure, malfunction, lack of durability, or other performance problem of a motor vehicle or item of motor vehicle equipment (including any part thereof) that is originated by an employee or representative of the manufacturer and that the manufacturer received during a reporting period. These documents shall be submitted alphabetically by make, within each make alphabetically by model, and within each model chronologically by model year.

§ 579.22 Reporting requirements for manufacturers of 500 or more medium-heavy vehicles and buses annually.

For each reporting period, a manufacturer whose aggregate number of medium-heavy vehicles and buses manufactured for sale, offered for sale, imported, or sold, in the United States, during the calendar year of the reporting period or during either of the prior two calendar years is 500 or more shall submit the information described in this section. For paragraphs (a) and (c) of this section, the manufacturer shall submit information separately with respect to each make, model, and model year of medium-heavy vehicle and bus manufactured during the reporting period and the nine model years prior to the earliest model year in the reporting period, including models no longer in production.

(a) *Production information.* Information that states the manufacturer's name, the quarterly reporting period, the make, the model, the model year, and the production. The production shall be stated as either the cumulative production of the current model year to the end of the reporting period, or the total model year production for each model year for which production has ceased. For each model that is manufactured and available with more than one type of fuel system (i.e., gasoline, diesel, or other (including vehicles that can be operated using more than one type of fuel, such as gasoline and compressed natural gas)), the information required by this subsection shall be reported separately by each of the three fuel system types. For each model that is manufactured and available with more than one type of service brake system (i.e., hydraulic or air), the information required by this subsection shall be reported by each of the two brake types. If the service brake system in a vehicle is not readily characterized as either hydraulic or air, the vehicle shall be considered to have hydraulic service brakes.

(b) *Information on incidents involving death or injury.* For all medium-heavy vehicles and buses less than ten calendar years old at the beginning of the reporting period:

(1) A report on each incident involving one or more deaths or injuries occurring in the United States that is identified in a claim against and received by the manufacturer or in a notice received by the manufacturer which notice alleges or proves that the death or injury was caused by a possible defect in the manufacturer's vehicle, together with each incident involving one or more deaths occurring in a foreign country that is identified in a claim against and received by the manufacturer involving the manufacturer's vehicle, if that vehicle is identical or substantially similar to a vehicle that the manufacturer has offered for sale in the United States. The report shall be submitted as a report on medium-heavy vehicles and buses and organized such that incidents are reported alphabetically by make, within each make alphabetically by model, and within each model chronologically by model year.

(2) For each incident described in paragraph (b)(1) of this section, the manufacturer shall separately report the make, model, model year, and VIN of the medium-heavy vehicle or bus, the incident date, the number of deaths, the number of injuries for incidents occurring in the United States, the State or foreign country where the incident occurred, each system or component of the vehicle that allegedly contributed to the incident, and whether the incident involved a fire or rollover, coded as follows: 01 steering system, 02 suspension system, 03 service brake system, hydraulic, 04 service brake system, air, 05 parking brake, 06 engine and engine cooling system, 07 fuel system, gasoline, 08 fuel system, diesel, 09 fuel system, other, 10 power train, 11 electrical, 12 exterior lighting, 13 visibility, 14 air bags, 15 seat belts, 16 structure, 17 latch, 18 vehicle speed control, 19 tires, 20 wheels, 21 trailer hitch, 22 seats, 23 fire, 24 rollover, 98 where a system or component not covered by categories 01 through 22 is specified in the claim or notice, and 99 where no system or component of the vehicle is specified in the claim or notice. If an incident involves more than one such code, each shall be reported separately in the report with a limit of five codes to be included.

(c) *Numbers of property damage claims, consumer complaints, warranty claims, and field reports.* Separate reports on the numbers of those property damage claims, consumer complaints, warranty claims, and field reports which involve the systems and components that are specified in codes 01 through 22 in paragraph (b)(2) of this section, or a fire (code 23), or rollover (code 24). Each such report shall state, separately by each such code, the number of such property damage claims, consumer complaints, warranty claims, or field reports, respectively, that involves the systems or components or fire or rollover indicated by the code. If an underlying property damage claim, consumer complaint, warranty claim, or field report involves more than one such code, each shall be reported separately in the report with no limit on the number of codes to be included. No reporting is necessary if the system or component involved is not specified in such codes, and the incident did not involve a fire or rollover.

(d) *Copies of field reports.* For all medium-heavy vehicles and buses less than ten calendar years old as of the beginning of the reporting period, a copy of each field report (other than a dealer report) involving one or more of the systems or components identified in paragraph (b)(2) of this section, or fire, or rollover, containing any assessment of an alleged failure, malfunction, lack of durability or other performance problem of a motor vehicle or item of motor vehicle equipment (including any part thereof) that is originated by an employee or representative of the manufacturer and that the manufacturer received during a reporting period. These documents shall be submitted alphabetically by make, within each make alphabetically by model, and within each model chronologically by model year.

§ 579.23 Reporting requirements for manufacturers of 500 or more motorcycles annually.

For each reporting period, a manufacturer whose aggregate number of motorcycles manufactured for sale, offered for sale, imported, or sold, in the United States, during the calendar year of the reporting period or during either of the prior two calendar years is 500 or more shall submit the information described in this section. For paragraphs (a) and (c) of this section, the manufacturer shall submit information separately with respect to each make, model, and model year of motorcycle manufactured during the reporting period and the nine model years prior to the earliest model year in the reporting period, including models no longer in production.

(a) *Production information.* Information that states the manufacturer's name, the quarterly reporting period, the make, the model, the model year, and the production. The production shall be stated as either the cumulative production of the current model year to the end of the reporting period, or the total model year production for each model year for which production has ceased.

(b) *Information on incidents involving death or injury.* For all motorcycles less than ten calendar years old as of the beginning of the reporting period:

(1) A report on each incident involving one or more deaths or injuries occurring in the United States that is identified in a claim against and received by the manufacturer or in a notice received by the manufacturer which notice alleges or proves that the death or injury was caused by a possible defect in the manufacturer's motorcycle, together with each incident involving one or more deaths occurring in a foreign country that is identified in a claim against and received by the manufacturer involving the manufacturer's motorcycle, if that motorcycle is identical or substantially similar to a motorcycle that the manufacturer has offered for sale in the United States. The report shall be submitted as a report on motorcycles and organized such that incidents are reported alphabetically by make, within each make alphabetically by model, and within each model chronologically by model year.

(2) For each incident described in paragraph (b)(1) of this section, the manufacturer shall separately report the make, model, model year, and VIN of the motorcycle, the incident date, the number of deaths, the number of injuries for incidents occurring in the

United States, the State or foreign country where the incident occurred, each system or component of the motorcycle that allegedly contributed to the incident, and whether the incident involved a fire, coded as follows: 01 steering, 02 suspension, 03 service brake system, 06 engine and engine cooling, 07 fuel system, 10 power train, 11 electrical, 12 exterior lighting, 16 structure,18 vehicle speed control, 19 tires, 20 wheels, 23 fire, 98 where a system or component not covered by categories 01 through 20 is specified in the claim or notice, and 99 where no system or component of the vehicle is specified in the claim or notice. If an incident involves more than one such code, each shall be reported separately in the report with a limit of five codes to be included.

(c) *Numbers of property damage claims, consumer complaints, warranty claims, and field reports.* Separate reports on the numbers of those property damage claims, consumer complaints, warranty claims, and field reports which involve the systems and components that are specified in codes 01 through 22 in paragraph (b)(2) of this section, or a fire (code 23). Each such report shall state, separately by each such code, the number of such property damage claims, consumer complaints, warranty claims, or field reports, respectively, that involves the systems or components or fire indicated by the code. If an underlying property damage claim, consumer complaint, warranty claim, or field report involves more than one such code, each shall be reported separately in the report with no limit on the number of codes to be included. No reporting is necessary if the system or component involved is not specified in such codes, and the incident did not involve a fire.

(d) *Copies of field reports.* For all motorcycles less than ten years old as of the date of the beginning of the reporting period, a copy of each field report (other than a dealer report) involving one or more of the components identified in paragraph (b)(2) of this section, or fire, containing any assessment of an alleged failure, malfunction, lack of durability or other performance problem of a motor vehicle or item of motor vehicle equipment (including any part thereof) that is originated by an employee or representative of the manufacturer and that the manufacturer received during a reporting period. These documents shall be submitted alphabetically by make, within each make alphabetically by model, and within each model chronologically by model year.

§ 579.24 Reporting requirements for manufacturers of 500 or more trailers annually.

For each reporting period, a manufacturer whose aggregate number of trailers manufactured for sale, offered for sale, imported, or sold, in the United States, during the calendar year of the reporting period or during either of the prior two calendar years is 500 or more shall submit the information described in this section. For paragraphs (a) and (c) of this section, the manufacturer shall submit information with respect to each make, model and model year of trailer manufactured during the reporting period and the nine model years prior to the earliest model year in the reporting period, including models no longer in production.

(a) *Production information.* Information that states the manufacturer's name, the quarterly reporting period, the make, the model, the model year, and the production. The production shall be stated as either the cumulative production of the current model year to the end of the reporting period, or the total model year production for each model year for which production has ceased. For each model that is manufactured and available with more than one type of service brake system (i.e., hydraulic or air), the information required by this subsection shall be reported by each of the two brake types. If the service brake system in a trailer is not readily characterized as either hydraulic or air, the trailer shall be considered to have hydraulic service brakes.

(b) *Information on incidents involving death or injury.* For all trailers less than ten calendar years old as of the beginning of the reporting period:

(1) A report on each incident involving one or more deaths or injuries occurring in the United States that is

identified in a claim against and received by the manufacturer or in a notice received by the manufacturer which notice alleges or proves that the death or injury was caused by a possible defect in the manufacturer's trailer, together with each incident involving one or more deaths occurring in a foreign country that is identified in a claim against and received by the manufacturer involving the manufacturer's trailer, if that trailer is identical or substantially similar to a trailer that the manufacturer has offered for sale in the United States. The report shall be submitted as a report on trailers and organized such that incidents are reported alphabetically by make, with each make alphabetically by model, and within each model chronologically by model year.

(2) For each incident described in paragraph (b)(1) of this section, the manufacturer shall separately report the make, model, model year, and VIN of the trailer, the incident date, the number of deaths, the number of injuries for incidents occurring in the United States, the State or foreign country where the incident occurred, each system or component of the trailer that allegedly contributed to the incident, and whether the incident involved a fire, coded as follows: 02 suspension, 03 service brake system, hydraulic, 04 service brake system, air, 05 parking brake, 11 electrical, 12 exterior lighting, 16 structure, 17 latch, 19 tires, 20 wheels, 21 trailer hitch, 23 fire, 98 where a system or component not covered by categories 02 through 21 is specified in the claim or notice, and 99 where no system or component of the trailer is specified in the claim or notice. If an incident involves more than one such code, each shall be reported separately in the report with a limit of five codes to be included.

(c) *Numbers of property damage claims, consumer complaints, warranty claims, and field reports.* Separate reports on the numbers of those property damage claims, consumer complaints, warranty claims, and field reports which involve the systems and components that are specified in codes 02 through 21 in paragraph (b)(2) of this section, or a fire (code 23). Each such report shall state, separately by each such code, the number of such property damage claims, consumer complaints, warranty claims, or field reports, respectively, that involves the systems or components or fire indicated by the code. If an underlying property damage claim, consumer complaint, warranty claim, or field report involves more than one such code, each shall be reported separately in the report with no limit on the number of codes to be included. No reporting is necessary if the system or component involved is not specified in such codes, and the incident did not involve a fire.

(d) *Copies of field reports.* For all trailers less than ten calendar years old as of the beginning of the reporting period, a copy of each field report (other than a dealer report) involving one or more of the systems or components identified in paragraph (b)(2) of this section, or fire, containing any assessment of an alleged failure, malfunction, lack of durability or other performance problem of a motor vehicle or item of motor vehicle equipment (including any part thereof) that is originated by an employee or representative of the manufacturer and that the manufacturer received during a reporting period. These documents shall be submitted alphabetically by make, with each make alphabetically by model, and within each model chronologically by model year.

§ 579.25 Reporting requirements for manufacturers of child restraint systems.

For each reporting period, a manufacturer who has manufactured for sale, offered for sale, imported, or sold child restraint systems in the United States shall submit the information described in this section. For paragraphs (a) and (c) of this section, the manufacturer shall submit information separately with respect to each make, model, and production year of child restraint system manufactured during the reporting period and the four production years prior to the earliest production year in the reporting period, including models no longer in production.

(a) *Production information.* Information that states the manufacturer's name, the quarterly reporting period,

the make, the model, the production year, and the production. The production shall be stated as either the cumulative production of the current model year to the end of the reporting period, or the total calendar year production for each calendar year for which production has ceased.

(b) *Information on incidents involving death or injury*. For all child restraint systems less than five calendar years old as of the beginning of the reporting period:

(1) A report on each incident involving one or more deaths or injuries occurring in the United States that is identified in a claim against and received by the manufacturer or in a notice received by the manufacturer which notice alleges or proves that the death or injury was caused by a possible defect in the manufacturer's child restraint system, together with each incident involving one or more deaths occurring in a foreign country that is identified in a claim against and received by the manufacturer involving the manufacturer's child restraint system, if the child restraint system is identical or substantially similar to a child restraint system that the manufacturer has offered for sale in the United States. The report shall be submitted as a report on child restraint systems and organized such that incidents are reported alphabetically by make, within each make alphabetically by model, and within each model chronologically by production year.

(2) For each such incident described in paragraph (b)(1) of this section, the manufacturer shall separately report the make, model, and production year of the child restraint system, the incident date, the number of deaths, the number of injuries for incidents occurring in the United States, the State or foreign country where the incident occurred, and each system or component of the child restraint system that allegedly contributed to the incident, coded as follows: 51 buckle and restraint harness, 52 seat shell, 53 handle, 54 base, 98 where a system or component not covered by categories 51 through 54 is specified in the claim or notice, and 99 where no system or component of the child restraint system is specified in the claim or notice. If an incident involves more than one such code, each shall be reported separately in the report.

(c) *Numbers of consumer complaints and warranty claims, and field reports*. Separate reports on the numbers of those consumer complaints and warranty claims, and field reports, which involve the systems and components that are specified in codes 51 through 54 in paragraph (b)(2) of this section. Each such report shall state, separately by each such code, the number of such consumer complaints and warranty claims, or field reports, respectively, that involves the systems or components indicated by the code. If an underlying consumer complaint and warranty claim, or field report, involves more than one such code, each shall be counted separately in the report with no limit on the number of codes to be included. No reporting is necessary if the system or component involved is not specified in such codes.

(d) *Copies of field reports*. For all child restraint systems less than five years old as of the beginning of the reporting period, a copy of each field report (other than a dealer field report) involving one or more of the systems or components identified in paragraph (b)(2) of this section, containing any assessment of an alleged failure, malfunction, lack of durability or other performance problem of the child restraint system (including any part thereof) that is originated by an employee or representative of the manufacturer and that the manufacturer received during the reporting period. These documents shall be submitted alphabetically by make, within each make alphabetically by model, and within each model chronologically by production year.

§ 579.26 Reporting requirements for manufacturers of tires.

For each reporting period, a manufacturer (including a brand name owner) who has manufactured for sale, offered for sale, imported, or sold tires in the United States shall submit the information described in this section. For paragraphs (a) and (c) of this section, the manufacturer shall submit information separately with respect to each tire line, size, SKU, plant where

manufactured, and model year of tire manufactured during the reporting period and the four calendar years prior to the earliest model year in the reporting period including tire lines no longer in production. For tires that are limited production tires or are otherwise exempted from the Uniform Tire Quality Grading Standards by § 575.104(c)(1) of this chapter, or are not passenger car tires, light truck tires, or motorcycle tires, the manufacturer need report only information on incidents involving a death, as specified in paragraph (b) of this section.

(a) *Production information.* Information that states the manufacturer's name, the quarterly reporting period, the tire line, the tire size, the tire type code, the SKU, the plant where manufactured, whether the tire is approved for use as original equipment on a motor vehicle, if so, the make, model, and model year of each vehicle for which it is approved, the production year, the cumulative warranty production, and the cumulative total production through the end of the reporting period.

(b) *Information on incidents involving death or injury.* (1) A report on each incident involving one or more deaths or injuries occurring in the United States that is identified in a claim against and received by the manufacturer or in a notice received by the manufacturer which notice alleges or proves that the death or injury was caused by a possible defect in the manufacturer's tire, together with each incident involving one or more deaths occurring in a foreign country that is identified in a claim against and received by the manufacturer involving the manufacturer's tire, if that tire is identical or substantially similar to a tire that the manufacturer has offered for sale in the United States. The report shall be submitted as a report on tires and organized such that incidents are reported alphabetically by tire line, within each tire line by tire size, and within each tire size chronologically by production year.

(2) For each such incident described in paragraph (b)(1) of this section, the manufacturer shall separately report the tire line, size, and production year of the tire, the TIN, the incident date, the number of deaths, the number of injuries for incidents occurring in the United States, the State or foreign country where the incident occurred, the make, model, and model year of the vehicle on which the tire was installed, and each component of the tire that allegedly contributed to the incident, coded as follows: 71 tread, 72 sidewall, 73 bead, 98 where a component not covered by categories 71 through 73 is specified in the claim or notice, and 99 where no component of the tire is specified in the claim or notice. If an incident involves more than one such code, each shall be reported separately in the report.

(c) *Numbers of property damage claims and warranty adjustments.* Separate reports on the numbers of those property damage claims and warranty adjustments which involve the components that are specified in codes 71 through 73, and 98, in paragraph (b)(2) of this section. Each such report shall state, separately by each such code, the numbers of such property damage claims and warranty adjustments, respectively, that involve the components indicated by the code. If an underlying property damage claim or warranty adjustment involves more than one such code, each shall be reported separately in the report with no limit on the number of codes to be included. No reporting is necessary if the system or component involved is not specified in such codes.

(d) *Common green tire reporting.* With each quarterly report, each manufacturer of tires shall provide NHTSA with a list of common green tires. For each specific common green tire grouping, the list shall provide all relevant tire lines, tire type codes, SKU numbers, plant where manufactured, brand names, and brand name owners.

§ 579.27 Reporting requirements for manufacturers of fewer than 500 vehicles annually, for manufacturers of original equipment, and for manufacturers of replacement equipment other than child restraint systems and tires.

(a) *Applicability.* This section applies to all manufacturers of motor vehicles that are not required to file a report pursuant to §§ 579.21 through 579.24 of

this part, to all manufacturers of original equipment, to all manufacturers of replacement equipment other than manufacturers of tires and child restraint systems, and to registered importers registered under 49 U.S.C. 30141(c).

(b) *Information on incidents involving deaths.* For each reporting period, a manufacturer to which this section applies shall submit a report, pertaining to vehicles and/or equipment manufactured or sold during the calendar year of the reporting period and the nine calendar years prior to the reporting period (four calendar years for equipment), including models no longer in production, on each incident involving one or more deaths occurring in the United States that is identified in a claim against and received by the manufacturer or in a notice received by the manufacturer which notice alleges or proves that the death was caused by a possible defect in the manufacturer's vehicle or equipment, together with each incident involving one or more deaths occurring in a foreign country that is identified in a claim against and received by the manufacturer involving the manufacturer's vehicle or equipment, if it is identical or substantially similar to a vehicle or item of equipment that the manufacturer has offered for sale in the United States. The report shall be organized such that incidents are reported alphabetically by make, within each make alphabetically by model, and within each model chronologically by model year.

(c) For each incident described in paragraph (b) of this section, the manufacturer shall separately report the make, model, and model year of the vehicle or equipment, the VIN (for vehicles only), the incident date, the number of deaths, the number of injuries for incidents occurring in the United States, the State or foreign country where the incident occurred, each system or component of the vehicle or equipment that allegedly contributed to the incident, and whether the incident involved a fire or rollover, as follows:

(1) For light vehicles, the system or component involved, and the existence of a fire or rollover, shall be identified and coded as specified in § 579.21(b)(2) of this part.

(2) For medium-heavy vehicles and buses, the system or component involved, and the existence of a fire or rollover, shall be identified and coded as specified in § 579.22(b)(2) of this part.

(3) For motorcycles, the system or component involved, and the existence of a fire, shall be identified and coded as specified in § 579.23(b)(2) of this part.

(4) For trailers, the system or component involved, and the existence of a fire, shall be identified and coded as specified in § 579.24(b)(2) of this part.

(5) For original and replacement equipment, a written identification of each component of the equipment that was allegedly involved, and whether there was a fire, in the manufacturer's own words.

§ 579.28 Due date of reports and other miscellaneous provisions.

(a) *Initial submission of reports.* The first calendar quarter for which reports are required under §§ 579.21 through 579.27 of this part is the second calendar quarter of 2003.

(b) *Due date of reports.* Each manufacturer of motor vehicles and motor vehicle equipment shall submit each report that is required by this subpart not later than 30 days after the last day of the reporting period. Notwithstanding the prior sentence, the due date for reports covering all calendar quarters in 2003 shall be 60 days after the last day of the reporting period.

(c) *One-time reporting of historical information.* No later than September 30, 2003, each manufacturer covered by §§ 579.21 through 579.26 of this part shall file separate reports, providing information on the numbers of warranty claims or warranty adjustments and field reports that it received in each calendar quarter from April 1, 2000, to March 31, 2003, for vehicles manufactured in model years 1994 through 2003 (including any vehicle designated as a 2004 model), for child restraint systems manufactured on or after April 1, 1998, and for tires manufactured on or after April 1, 1998. Each report shall include production data, as specified in paragraph (a) of §§ 579.21 through 579.26 of this part and shall identify the alleged

system or component covered by warranty claim, warranty adjustment, or field report, as specified in paragraph (c) of §§ 579.21 through 579.26 of this part.

(d) *Minimal specificity*. A claim or notice involving death, a claim or notice involving injury, a claim involving property damage, a consumer complaint, a warranty claim or warranty adjustment, or a field report need not be reported if it does not identify the vehicle or equipment with minimal specificity. If a manufacturer initially receives a claim, notice, complaint, warranty claim, warranty adjustment, or field report in which the vehicle or equipment is not identified with minimal specificity and subsequently obtains information that provides the requisite information needed to identify the product with minimal specificity, the claim, etc. shall be deemed to have been received when the additional information is received. If a manufacturer receives a claim or notice involving death or injury in which the vehicle or equipment is not identified with minimal specificity and the matter is being handled by legal counsel retained by the manufacturer, the manufacturer shall attempt to obtain the missing minimal specificity information from such counsel.

(e) *Claims received by registered agents*. A claim received by any registered agent of a manufacturer under the laws of any State, or the agent that any manufacturer offering motor vehicles or motor vehicle equipment for import has designated pursuant to 49 U.S.C. 30164(a), shall be deemed received by the manufacturer.

(f) *Updating of information required in reports*. (1) Except as specified in this subsection, a manufacturer need not update its reports under this subpart.

(2) With respect to each report of an incident submitted under paragraph (b) of §§ 579.21 through 579.26 of this part:

(i) If a vehicle manufacturer is not aware of the VIN, or a tire manufacturer is not aware of the TIN, at the time the incident is initially reported, the manufacturer shall submit an updated report of such incident in its report covering the reporting period in which the VIN or TIN is identified.

(ii) If a manufacturer indicated code 99 in its report because a system or component had not been identified in the claim or notice that led to the report, and the manufacturer becomes aware during a subsequent calendar quarter that one or more of the specified systems or components allegedly contributed to the incident, the manufacturer shall submit an updated report of such incident in its report covering the reporting period in which the involved specified system(s) or component(s) is (are) identified.

(iii) If one or more systems or components is identified in a manufacturer's report of an incident, the manufacturer need not submit an updated report to reflect additional systems or components allegedly involved in the incident that it becomes aware of in a subsequent reporting period.

(iv) If the report is of an incident involving an injury and an injured person dies after a manufacturer has reported the injury to NHTSA, the manufacturer need not submit an updated report to NHTSA reflecting that death.

(g) *When a report involving a death is not required*. A report on incident(s) involving one or more deaths occurring in a foreign country that is identified in claim(s) against a manufacturer of motor vehicles or motor vehicle equipment involving a vehicle or equipment that is identical or substantially similar to equipment that the manufacturer has offered for sale in the United States need not be furnished if the claim specifically alleges that the death was caused by a possible defect in a component other than one that is common to the vehicle or equipment that the manufacturer has offered for sale in the United States.

(h) *Reporting on behalf of other manufacturers*. Whenever a fabricating manufacturer or importer submits a report on behalf of one or more other manufacturers (including a brand name owner), as authorized under § 579.3(b) of this part, the submitting manufacturer must identify each such other manufacturer. Whenever a brand name owner submits a report on its own behalf, it must identify the fabricating manufacturer of each separate product on which it is reporting.

(i) *Abbreviations.* Whenever a manufacturer is required to identify a State in which an incident occurred, the manufacturer shall use the two-letter abbreviations established by the United States Postal Service (e.g., AZ for Arizona). Whenever a manufacturer is required to identify a foreign country in which an incident occurred, the manufacturer shall use the English-language name of the country in non-abbreviated form.

(j) *Claims of confidentiality.* If a manufacturer claims that any of the information, data, or documents that it submits is entitled to confidential treatment, it must make such claim in accordance with part 512 of this chapter.

(k) *Additional related information that NHTSA may request.* In addition to information required periodically under this subpart, NHTSA may request other information that may help identify a defect related to motor vehicle safety.

(l) *Use of the plural.* As used in this part, the plural includes the singular and the singular includes the plural to bring within the scope of reporting that which might otherwise be construed to be without the scope.

§ 579.29 Manner of reporting.

(a) *Submission of reports.* (1) Except as provided in this paragraph, each report required under paragraphs (a) through (c) of §§ 579.21 through 579.26 of this part must be submitted to NHTSA's early warning data repository identified on NHTSA's Internet homepage (*www.nhtsa.dot.gov*). A manufacturer must use templates provided at the early warning website, also identified on NHTSA's homepage, for submitting reports. For data files smaller than the size limit of the Internet e-mail server of the Department of Transportation, a manufacturer may submit a report as an attachment to an e-mail message to *odi.ewr@nhtsa.dot.gov*, using the same templates.

(2) Each report required under § 579.27 of this part may be submitted to NHTSA's early warning data repository as specified in paragraph (a)(1) of this section or by manually filling out an interactive form on NHTSA's early warning website.

(b) *Submission of documents.* A copy of each document required under paragraph (d) of §§ 579.21 through 579.26 of this part may be submitted in digital form using a graphic compression protocol, approved by NHTSA, to the NHTSA data repository, or as an attachment to an e-mail message, as specified in paragraph (a)(1) of this section. Any digital image provided by a manufacturer shall be not less than 200 or more than 300 dpi (dots per inch) resolution. Such documents may also be submitted in paper form.

(c) *Designation of manufacturer contacts.* Not later than 30 days prior to the date of its first quarterly submission, each manufacturer must provide the names, office telephone numbers, postal and street mailing addresses, and electronic mail addresses of two employees (one primary and one backup) whom NHTSA may contact for resolving issues that may arise concerning the submission of information and documents required by this part.

(d) *Manufacturer reporting identification and password.* Not later than 30 days prior to the date of its first quarterly submission, each manufacturer must request a manufacturer identification number and a password.

(e) *Graphic compression protocol.* Not later than 30 days prior to the date of its first quarterly submission, each manufacturer which wishes to submit a copy of a document in digital form, as provided in paragraph (b) of this section, must obtain approval from NHTSA for the use of such protocol.

(f) Information and requests submitted under paragraphs (c), (d), and (e) of this section shall be provided in writing to the Director, Office of Defects Investigation, NHTSA, 400 Seventh Street, SW., Washington, DC 20590.

PART 580—ODOMETER DISCLOSURE REQUIREMENTS

Sec.

580.1 Scope.
580.2 Purpose.
580.3 Definitions.
580.4 Security of title documents and power of attorney forms.
580.5 Disclosure of odometer information.
580.6 [Reserved]

580.7 Disclosure of odometer information for leased motor vehicles.
580.8 Odometer disclosure statement retention.
580.9 Odometer record retention for auction companies.
580.10 Application for assistance.
580.11 Petition for approval of alternate disclosure requirements.
580.12 Petition for extension of time.
580.13 Disclosure of odometer information by power of attorney.
580.14 Power of attorney to review title documents and acknowledge disclosure.
580.15 Certification by person exercising powers of attorney.
580.16 Access of transferee to prior title and power of attorney documents.
580.17 Exemptions.
APPENDIX A TO PART 580—SECURE PRINTING PROCESSES AND OTHER SECURE PROCESSES
APPENDIX B TO PART 580—DISCLOSURE FORM FOR TITLE
APPENDIX C TO PART 580—SEPARATE DISCLOSURE FORM
APPENDIX D TO PART 580—DISCLOSURE FORM FOR LEASED VEHICLE
APPENDIX E TO PART 580—POWER OF ATTORNEY DISCLOSURE FORM

AUTHORITY: 49 U.S.C. 32705; delegation of authority at 49 CFR 1.50(f) and 501.8(e)(1).

SOURCE: 53 FR 29476, Aug. 5, 1988, unless otherwise noted.

§ 580.1 Scope.

This part prescribes rules requiring transferors and lessees of motor vehicles to make written disclosure to transferees and lessors respectively, concerning the odometer mileage and its accuracy as directed by sections 408 (a) and (e) of the Motor Vehicle Information and Cost Savings Act as amended, 15 U.S.C. 1988 (a) and (e). In addition, this part prescribes the rules requiring the retention of odometer disclosure statements by motor vehicle dealers, distributors and lessors and the retention of certain other information by auction companies as directed by sections 408(g) and 414 of the Motor Vehicle Information and Cost Savings Act as amended, 15 U.S.C. 1990(d) and 1988(g).

§ 580.2 Purpose.

The purpose of this part is to provide purchasers of motor vehicles with odometer information to assist them in determining a vehicle's condition and value by making the disclosure of a vehicle's mileage a condition of title and by requiring lessees to disclose to their lessors the vehicle's mileage at the time the lessors transfer the vehicle. In addition, the purpose of this part is to preserve records that are needed for the proper investigation of possible violations of the Motor Vehicle Information and Cost Savings Act and any subsequent prosecutorial, adjudicative or other action.

§ 580.3 Definitions.

All terms defined in sections 2 and 402 of the Motor Vehicle Information and Cost Savings Act are used in their statutory meaning. Other terms used in this part are defined as follows:

Lessee means any person, or the agent for any person, to whom a motor vehicle has been leased for a term of at least 4 months.

Lessor means any person, or the agent for any person, who has leased 5 or more motor vehicles in the past 12 months.

Mileage means actual distance that a vehicle has traveled.

Original power of attorney means, for single copy forms, the document set forth by secure process which is issued by the State, and, for multicopy forms, any and all copies set forth by secure process which are issued by the State.

Secure printing process or other secure process means any process which deters and detects counterfeiting and/or unauthorized reproduction and allows alterations to be visible to the naked eye.

Transferee means any person to whom ownership of a motor vehicle is transferred, by purchase, gift, or any means other than by the creation of a security interest, and any person who, as agent, signs an odometer disclosure statement for the transferee.

Transferor means any person who transfers his ownership of a motor vehicle by sale, gift, or any means other than by the creation of a security interest, and any person who, as agent, signs an odometer disclosure statement for the transferor.

[53 FR 29476, Aug. 5, 1988, as amended at 54 FR 35887, Aug. 30, 1989; 56 FR 47686, Sept. 20, 1991]

§ 580.4 Security of title documents and power of attorney forms.

Each title shall be set forth by means of a secure printing process or other secure process. In addition, power of attorney forms issued pursuant to §§ 580.13 and 580.14 and documents which are used to reassign the title shall be issued by the State and shall be set forth by a secure process.

[54 FR 35887, Aug. 30, 1989]

§ 580.5 Disclosure of odometer information.

(a) Each title, at the time it is issued to the transferee, must contain the mileage disclosed by the transferor when ownership of the vehicle was transferred and contain a space for the information required to be disclosed under paragraphs (c), (d), (e) and (f) of this section at the time of future transfer.

(b) Any documents which are used to reassign a title shall contain a space for the information required to be disclosed under paragraphs (c), (d), (e) and (f) of this section at the time of transfer of ownership.

(c) In connection with the transfer of ownership of a motor vehicle, each transferor shall disclose the mileage to the transferee in writing on the title or, except as noted below, on the document being used to reassign the title. In the case of a transferor in whose name the vehicle is titled, the transferor shall disclose the mileage on the title, and not on a reassignment document. This written disclosure must be signed by the transferor, including the printed name. In connection with the transfer of ownership of a motor vehicle in which more than one person is a transferor, only one transferor need sign the written disclosure. In addition to the signature and printed name of the transferor, the written disclosure must contain the following information:

(1) The odometer reading at the time of transfer (not to include tenths of miles);

(2) The date of transfer;

(3) The transferor's name and current address;

(4) The transferee's name and current address; and

(5) The identity of the vehicle, including its make, model, year, and body type, and its vehicle identification number.

(d) In addition to the information provided under paragraph (c) of this section, the statement shall refer to the Federal law and shall state that failure to complete or providing false information may result in fines and/or imprisonment. Reference may also be made to applicable State law.

(e) In addition to the information provided under paragraphs (c) and (d) of this section,

(1) The transferor shall certify that to the best of his knowledge the odometer reading reflects the actual mileage, or;

(2) If the transferor knows that the odometer reading reflects the amount of mileage in excess of the designed mechanical odometer limit, he shall include a statement to that effect; or

(3) If the transferor knows that the odometer reading differs from the mileage and that the difference is greater than that caused by odometer calibration error, he shall include a statement that the odometer reading does not reflect the actual mileage, and should not be relied upon. This statement shall also include a warning notice to alert the transferee that a discrepancy exists between the odometer reading and the actual mileage.

(f) The transferee shall sign the disclosure statement, print his name, and return a copy to his transferor.

(g) If the vehicle has not been titled or if the title does not contain a space for the information required, the written disclosure shall be executed as a separate document.

(h) No person shall sign an odometer disclosure statement as both the transferor and transferee in the same transaction, unless permitted by §§ 580.13 or 580.14.

[53 FR 29476, Aug. 5, 1988, as amended at 54 FR 35887, Aug. 30, 1989; 56 FR 47686, Sept. 20, 1991]

§ 580.6 [Reserved]

§ 580.7 Disclosure of odometer information for leased motor vehicles.

(a) Before executing any transfer of ownership document, each lessor of a

leased motor vehicle shall notify the lessee in writing that the lessee is required to provide a written disclosure to the lessor regarding the mileage. This notice shall contain a reference to the federal law and shall state that failure to complete or providing false information may result in fines and/or imprisonment. Reference may also be made to applicable State law.

(b) In connection with the transfer of ownership of the leased motor vehicle, the lessee shall furnish to the lessor a written statement regarding the mileage of the vehicle. This statement must be signed by the lessee and, in addition to the information required by paragraph (a) of this section, shall contain the following information:

(1) The printed name of the person making the disclosure;

(2) The current odometer reading (not to include tenths of miles);

(3) The date of the statement;

(4) The lessee's name and current address;

(5) The lessor's name and current address;

(6) The identity of the vehicle, including its make, model, year, and body type, and its vehicle identification number;

(7) The date that the lessor notified the lessee of disclosure requirements;

(8) The date that the completed disclosure statement was received by the lessor; and

(9) The signature of the lessor.

(c) In addition to the information provided under paragraphs (a) and (b) of this section,

(1) The lessee shall certify that to the best of his knowledge the odometer reading reflects the actual mileage; or

(2) If the lessee knows that the odometer reading reflects the amount of mileage in excess of the designed mechanical odometer limit, he shall include a statement to that effect; or

(3) If the lessee knows that the odometer reading differs from the mileage and that the difference is greater than that caused by odometer calibration error, he shall include a statement that the odometer reading is not the actual mileage and should not be relied upon.

(d) If the lessor transfers the leased vehicle without obtaining possession of it, the lessor may indicate on the title the mileage disclosed by the lessee under paragraph (b) and (c) of this section, unless the lessor has reason to believe that the disclosure by the lessee does not reflect the actual mileage of the vehicle.

§ 580.8 Odometer disclosure statement retention.

(a) Dealers and distributors of motor vehicles who are required by this part to execute an odometer disclosure statement shall retain for five years a photostat, carbon or other facsimile copy of each odometer mileage statement which they issue and receive. They shall retain all odometer disclosure statements at their primary place of business in an order that is appropriate to business requirements and that permits systematic retrieval.

(b) Lessors shall retain, for five years following the date they transfer ownership of the leased vehicle, each odometer disclosure statement which they receive from a lessee. They shall retain all odometer disclosure statements at their primary place of business in an order that is appropriate to business requirements and that permits systematic retrieval.

(c) Dealers and distributors of motor vehicles who are granted a power of attorney by their transferor pursuant to § 580.13, or by their transferee pursuant to § 580.14, shall retain for five years a photostat, carbon, or other facsimile copy of each power of attorney that they receive. They shall retain all powers of attorney at their primary place of business in an order that is appropriate to business requirements and that permits systematic retrieval.

[53 FR 29476, Aug. 5, 1988, as amended at 54 FR 35888, Aug. 30, 1989]

§ 580.9 Odometer record retention for auction companies.

Each auction company shall establish and retain at its primary place of business in an order that is appropriate to business requirements and that permits systematic retrieval, for five years following the date of sale of each motor vehicle, the following records:

(a) The name of the most recent owner (other than the auction company);

(b) The name of the buyer;

(c) The vehicle identification number; and

(d) The odometer reading on the date which the auction company took possession of the motor vehicle.

§ 580.10 Application for assistance.

(a) A State may apply to NHTSA for assistance in revising its laws to comply with the requirements of 408(d) (1) and (2) of the Motor Vehicle Information and Cost Savings Act, 15 U.S.C. 1988(d) (1) and (2) and §§ 580.4 and 580.5 of this part.

(b) Each application filed under section shall—

(1) Be written in the English language;

(2) Be submitted, to the Office of Chief Counsel, National Highway Traffic Safety Administration, 400 Seventh Street, SW., Washington, DC 20590;

(3) Include a copy of current motor vehicle titling and/or disclosure requirements in effect in the State; and

(4) Include a draft of legislation or regulations intended to amend or revise current State motor vehicle titling and/or disclosure requirements to conform with Federal requirements.

(c) The agency will respond to the applicant, in writing, and provide a list of the Federal statutory and/or regulatory requirements that the State may have failed to include in its proposal and indicate if any sections of the proposal appear to conflict with Federal requirements.

§ 580.11 Petition for approval of alternate disclosure requirements.

(a) A State may petition NHTSA for approval of disclosure requirements which differ from the disclosure requirements of §§ 580.5, 580.7, or 580.13(f) of this part.

(b) Each petition filed under this section shall—

(1) Be written in the English language;

(2) Be submitted to the Office of Chief Counsel, National Highway Traffic Safety Administration, 400 Seventh Street SW., Washington, DC 20590;

(3) Set forth the motor vehicle disclosure requirements in effect in the State, including a copy of the applicable State law or regulation; and

(4) Explain how the State motor vehicle disclosure requirements are consistent with the purposes of the Motor Vehicle Information and Cost Savings Act.

(c) Notice of the petition and an initial determination pending a 30-day comment period will be published in the FEDERAL REGISTER. Notice of final grant or denial of a petition for approval of alternate motor vehicle disclosure requirements will be published in the FEDERAL REGISTER. The effect of the grant of a petition is to relieve a State from responsibility to conform the State disclosure requirements with §§ 580.5, 580.7, or 580.13(f), as applicable, for as long as the approved alternate disclosure requirements remain in effect in that State. The effect of a denial is to require a State to conform to the requirements of §§ 580.5, 580.7 or 580.13(f), as applicable, of this part until such time as the NHTSA approves any alternate motor vehicle disclosure requirements.

[53 FR 29476, Aug. 5, 1988, as amended at 56 FR 47686, Sept. 20, 1991]

§ 580.12 Petition for extension of time.

(a) If a State cannot conform its laws to achieve compliance with this part by April 29, 1989, the State may petition for an extension of time.

(b) Each petition filed under this section shall—

(1) Be written in the English language;

(2) Be submitted, by February 28, 1989, to the Office of Chief Counsel, National Highway Traffic Safety Administration, 400 Seventh Street SW., Washington, DC, 20590;

(3) Set forth a chronological analysis of the efforts the State has taken to meet the deadline, the reasons why it did not do so, the length of time desired for extension and a description of the steps to be taken while the extension is in effect.

(c) Notice of either the grant or denial of the petition is issued to the petitioner and will be published in the FEDERAL REGISTER.

(d) A petition for a renewal of an extension of time must be filed no later than 30 days prior to the termination of the extension of time granted by the Agency. A petition for a renewal of an

extension of time must meet the same requirements as the original petition for an extension of time.

(e) If a petition for a renewal of the extension of time which meets the requirements of § 580.12(b) is filed, the extension of time will continue until a decision is made on the renewal petition.

§ 580.13 Disclosure of odometer information by power of attorney.

(a) If the transferor's title is physically held by a lienholder, or if the transferor to whom the title was issued by the State has lost his title and the transferee obtains a duplicate title on behalf of the transferor, and if otherwise permitted by State law, the transferor may give a power of attorney to his transferee for the purpose of mileage disclosure. The power of attorney shall be on a form issued by the State to the transferee that is set forth by means of a secure printing process or other secure process, and shall contain, in part A, a space for the information required to be disclosed under paragraphs (b), (c), (d), and (e) of this section. If a State permits the use of a power of attorney in the situation described in § 580.14(a), the form must also contain, in part B, a space for the information required to be disclosed under § 580.14, and, in part C, a space for the certification required to be made under § 580.15.

(b) In connection with the transfer of ownership of a motor vehicle, each transferor to whom a title was issued by the State whose title is physically held by a lienholder or whose title has been lost, and who elects to give his transferee a power of attorney for the purpose of mileage disclosure, must appoint the transferee his attorney-in-fact for the purpose of mileage disclosure and disclose the mileage on the power of attorney form issued by the State. This written disclosure must be signed by the transferor, including the printed name, and contain the following information:

(1) The odometer reading at the time of transfer (not to include tenths of miles);

(2) The date of transfer;

(3) The transferor's name and current address;

(4) The transferee's name and current address; and

(5) The identity of the vehicle, including its make, model year, body type and vehicle identification number.

(c) In addition to the information provided under paragraph (b) of this section, the power of attorney form shall refer to the Federal odometer law and state that providing false information or the failure of the person granted the power of attorney to submit the form to the State may result in fines and/or imprisonment. Reference may also be made to applicable State law.

(d) In addition to the information provided under paragraphs (b) and (c) of this section:

(1) The transferor shall certify that to the best of his knowledge the odometer reading reflects the actual mileage; or

(2) If the transferor knows that the odometer reading reflects mileage in excess of the designed mechanical odometer limit, he shall include a statement to that effect; or

(3) If the transferor knows that the odometer reading differs from the mileage and the difference is greater than that caused by a calibration error, he shall include a statement that the odometer reading does not reflect the actual mileage and should not be relied upon. This statement shall also include a warning notice to alert the transferee that a discrepancy exists between the odometer reading and the actual mileage.

(e) The transferee shall sign the power of attorney form, print his name, and return a copy of the power of attorney form to the transferor.

(f) Upon receipt of the transferor's title, the transferee shall complete the space for mileage disclosure on the title exactly as the mileage was disclosed by the transferor on the power of attorney form. The transferee shall submit the original power of attorney form to the State that issued it, with a copy of the transferor's title or with the actual title when the transferee submits a new title application at the same time. The State shall retain the power of attorney form and title for three years or a period equal to the State titling record retention period, whichever is shorter. If the mileage

disclosed on the power of attorney form is lower than the mileage appearing on the title, the power of attorney is void and the dealer shall not complete the mileage disclosure on the title.

[54 FR 35888, Aug. 30, 1989, as amended at 54 FR 40083, Sept. 29, 1989; 56 FR 47686, Sept. 20, 1991]

§ 580.14 Power of attorney to review title documents and acknowledge disclosure.

(a) In circumstances where part A of a secure power of attorney form has been used pursuant to § 580.13 of this part, and if otherwise permitted by State law, a transferee may give a power of attorney to his transferor to review the title and any reassignment documents for mileage discrepancies, and if no discrepancies are found, to acknowledge disclosure on the title. The power of attorney shall be on part B of the form referred to in § 580.13(a), which shall contain a space for the information required to be disclosed under paragraphs (b), (c), (d), and (e) of this section and, in part C, a space for the certification required to be made under § 580.15.

(b) The power of attorney must include a mileage disclosure from the transferor to the transferee and must be signed by the transferor, including the printed name, and contain the following information:

(1) The odometer reading at the time of transfer (not to include tenths of miles);

(2) The date of transfer;

(3) The transferor's name and current address;

(4) The transferee's name and current address; and

(5) The identity of the vehicle, including its make, model year, body type and vehicle identification number.

(c) In addition to the information provided under paragraph (b) of this section, the power of attorney form shall refer to the Federal odometer law and state that providing false information or the failure of the person granted the power of attorney to submit the form to the State may result in fines and/or imprisonment. Reference may also be made to applicable State law.

(d) In addition to the information provided under paragraphs (b) and (c) of this section:

(1) The transferor shall certify that to the best of his knowledge the odometer reading reflects the actual mileage;

(2) If the transferor knows that the odometer reading reflects mileage in excess of the designed mechanical odometer limit, he shall include a statement to that effect; or

(3) If the transferor knows that the odometer reading differs from the mileage and the difference is greater than that caused by a calibration error, he shall include a statement that the odometer reading does not reflect the actual mileage and should not be relied upon. This statement shall also include a warning notice to alert the transferee that a discrepancy exists between the odometer reading and the actual mileage.

(e) The transferee shall sign the power of attorney form, and print his name.

(f) The transferor shall give a copy of the power of attorney form to his transferee.

[54 FR 35888, Aug. 30, 1989]

§ 580.15 Certification by person exercising powers of attorney.

(a) A person who exercises a power of attorney under both §§ 580.13 and 580.14 must complete a certification that he has disclosed on the title document the mileage as it was provided to him on the power of attorney form, and that upon examination of the title and any reassignment documents, the mileage disclosure he has made on the title pursuant to the power of attorney is greater than that previously stated on the title and reassignment documents. This certification shall be under part C of the same form as the powers of attorney executed under §§ 580.13 and 580.14 and shall include:

(1) The signature and printed name of the person exercising the power of attorney;

(2) The address of the person exercising the power of attorney; and

(3) The date of the certification.

(b) If the mileage reflected by the transferor on the power of attorney is less than that previously stated on the

title and anyreassignment documents, the power of attorney shall be void.

[54 FR 35889, Aug. 30, 1989]

§ 580.16 Access of transferee to prior title and power of attorney documents.

(a) In circumstances in which a power of attorney has been used pursuant to § 580.13 of this part, if a subsequent transferee elects to return to his transferor to sign the disclosure on the title when the transferor obtains the title and does not give his transferor a power of attorney to review the title and reassignment documents, upon the transferee's request, the transferor shall show to the transferee a copy of the power of attorney that he received from his transferor.

(b) Upon request of a purchaser, a transferor who was granted a power of attorney by his transferor and who holds the title to the vehicle in his own name, must show to the purchaser the copy of the previous owner's title and the power of attorney form.

[54 FR 35889, Aug. 30, 1989]

§ 580.17 Exemptions.

Notwithstanding the requirements of §§ 580.5 and 580.7:

(a) A transferor or a lessee of any of the following motor vehicles need not disclose the vehicle's odometer mileage:

(1) A vehicle having a Gross Vehicle Weight Rating, as defined in § 571.3 of this title, of more than 16,000 pounds;

(2) A vehicle that is not self-propelled;

(3) A vehicle that was manufactured in a model year beginning at least ten years before January 1 of the calendar year in which the transfer occurs; or

Example to paragraph (a)(3): For vehicle transfers occurring during calendar year 1998, model year 1988 or older vehicles are exempt.

(4) A vehicle sold directly by the manufacturer to any agency of the United States in conformity with contractual specifications.

(b) A transferor of a new vehicle prior to its first transfer for purposes other than resale need not disclose the vehicle's odometer mileage.

(c) A lessor of any of the vehicles listed in paragraph (a) of this section need not notify the lessee of any of these vehicles of the disclosure requirements of § 580.7.

[53 FR 29476, Aug. 5, 1988, as amended at 54 FR 35888, Aug. 30, 1989. Redesignated at 62 FR 47765, Sept. 11, 1997; 63 FR 52632, Oct. 1, 1998]

APPENDIX A TO PART 580—SECURE PRINTING PROCESSES AND OTHER SECURE PROCESSES

1. Methods to deter or detect counterfeiting and/or unauthorized reproduction.

(a) Intaglio printing—a printing process utilized in the production of bank-notes and other security documents whereby an engraved plate meets the paper under extremely high pressure forcing the paper into the incisions below the surface of the plate.

(b) Intaglio Printing With Latent Images—a printing process utilized in the production of bank-notes and other security documents whereby an engraved plate meets the paper under extremely high pressure forcing the paper into the incisions below the surface of the plate. The three dimensional nature of intaglio printing creates latent images that aid in verification of authenticity and deter counterfeiting.

(c) High Resolution Printing—a printing process which achieves excellent art clarity and detail quality approaching that of the intaglio process.

(d) Micro-line Printing—a reduced line of type that appears to be a solid line to the naked eye but contains readable intelligence under strong magnification.

(e) Pantograph Void Feature—wording incorporated into a pantograph by varying screen density in the pantograph. The wording will appear when attempts are made to photocopy on color copiers.

(f) Hologram—a defraction foil substrate, produced from a negative which was made by splitting a laser beam into two separate beams to produce a three dimensional effect.

(g) Security Paper—paper containing a security watermark and/or a security thread.

2. Methods to allow alterations to be visible to the naked eye.

(a) Erasure Sensitive Background Inks—a process whereby the text is printed in a dark color ink over a fine line erasure-sensitive prismatic ink tint.

(b) Security Lamination—retro-reflective security laminate is placed over vital information after it has been entered to allow for detection of attempts to alter this information.

(c) Security Paper—paper which has been chemically treated to detect chemical alterations.

APPENDIX B TO PART 580—DISCLOSURE FORM FOR TITLE

ODOMETER DISCLOSURE STATEMENT

Federal law (and State law, if applicable) requires that you state the mileage in connection with the transfer of ownership. Failure to complete or providing a false statement may result in fines and/or imprisonment.

I state that the odometer now reads _____ (no tenths) miles and to the best of my knowledge that it reflects the actual mileage of the vehicle described herein, unless one of the following statements is checked.

—(1) I hereby certify that to the best of my knowledge the odometer reading reflects the amount of mileage in excess of its mechanical limits.

—(2) I hereby certify that the odometer reading is NOT the actual mileage. WARNING—ODOMETER DISCREPANCY.

_____

(Transferor's Signature)

_____

(Transferee's Signature)

_____

(Printed name)

_____

(Printed name)≤

Date of Statement _____

Transferee's Name _____

Transferee's Address _____

(Street)

_____

(City) (State) (ZIP Code)

APPENDIX C TO PART 580—SEPARATE DISCLOSURE FORM

ODOMETER DISCLOSURE STATEMENT

Federal law (and State law, if applicable) requires that you state the mileage upon transfer of ownership. Failure to complete or providing a false statement may result in fines and/or imprisonment.

I, _____ (transferor's name, Print) state that the odometer now reads _____ (no tenths) miles and to the best of my knowledge that it reflects the actual mileage of the vehicle described below, unless one of the following statements is checked.

—(1) I hereby certify that to the best of my knowledge the odometer reading reflects the amount of mileage in excess of its mechanical limits.

—(2) I hereby certify that the odometer reading is NOT the actual mileage. WARNING—ODOMETER DISCREPANCY.

Make _____

Model _____

Body Type _____

Vehicle Identification Number _____

Year _____

_____

(Transferor's Signature)

_____

(Printed name)

Transferor's Address _____

(Street)

_____

(City) (State) (ZIP Code)

Date of Statement _____

_____

(Transferee's Signature)

_____

(Printed name)

Transferee's Name _____

Transferee's Address _____

(Street)

_____

(City) (State) (ZIP Code)

APPENDIX D TO PART 580—DISCLOSURE FORM FOR LEASED VEHICLE

ODOMETER DISCLOSURE STATEMENT (LEASED VEHICLE)

Federal law (and State law, if applicable) requires that the lessee disclose the mileage to the lessor in connection with the transfer of ownership. Failure to complete or making a false statement may result in fines and/or imprisonment. Complete disclosure form below and return to lessor.

I,_____ (name of person making disclosure, Print) state that the odometer now reads _____ (no tenths) miles and to the best of my knowledge that it reflects the actual mileage of the vehicle described below, unless one of the following statements is checked.

—(1) I hereby certify that to the best of my knowledge the odometer reading reflects the amount of mileage in excess of its mechanical limits.

—(2) I hereby certify that the odometer reading is NOT the actual mileage.

Make _____

Model _____

Body Type _____

Vehicle Identification Number _____

Year _____

Lessee's Name _____

Lessee's Address _____

(Street)

_____

(City) (State) (ZIP Code)

Lessee's Signature _____

Date of Statement _____

Lessor's Name _____

Lessor's Address _____

(Street)

_____

(City) (State) (ZIP Code)
Date Disclosure Form Sent to Lessee _____
Date Completed Disclosure Form Received from Lessee _____
Lessor's Signature _____

APPENDIX E TO PART 580—POWER OF ATTORNEY DISCLOSURE FORM

WARNING: This form may be used only when title is physically held by lienholder or has been lost. This form must be submitted to the state by the person exercising powers of attorney. Failure to do so may result in fines and/or imprisonment.

VEHICLE DESCRIPTION

Year _____ Make _____
Model _____ Body Type _____
Vehicle Identification Number _____

PART A. POWER OF ATTORNEY TO DISCLOSE MILEAGE

Federal law (and State Law, if applicable) requires that you state the mileage upon transfer of ownership. Providing a false statement may result in fines and/or imprisonment.

I, _____ (transferor's name, Print) appoint _____ (transferee's name, Print) as my attorney-in-fact, to disclose the mileage, on the title for the vehicle described above, exactly as stated in my following disclosure.

I state that the odometer now reads _____ (no tenths) miles and to the best of my knowledge that it reflects the actual mileage unless one of the following statements is checked.

____ (1) I hereby certify that to the best of my knowledge the odometer reading reflect the mileage in excess of its mechanical limits.

____ (2) I hereby certify that the odometer reading is NOT the actual mileage. WARNING—ODOMETER DISCREPANCY.

_____
(Transferor's Signature)

_____
(Printed Name)
Transferor's Address (Street)
_____
(City) _____ (State) ____ (ZIP Code) _____.
Date of Statement _____

_____
(Transferee's Signature)

_____
(Printed Name)
Transferee's Name _____
Transferee's Address (Street)
_____
(City) _____ (State) ____ (ZIP Code) _____.

PART B. POWER OF ATTORNEY TO REVIEW TITLE DOCUMENTS AND ACKNOWLEDGE DISCLOSURE.

(Part B is invalid unless Part A has been completed.)

I, _____ (transferee's name, Print) appoint _____ (transferor's name, Print) as my attorney-in-fact, to sign the mileage disclosure, on the title for the vehicle described above, only if the disclosure is exactly as the disclosure completed below.

_____
(Transferee's Signature)

_____
(Printed Name)
Transferee's Name _____
Transferee's Address (Street)
_____
(City) _____ (State) ____ (ZIP Code) _____.

Federal law (and State Law, if applicable) requires that you state the mileage upon transfer of ownership. Providing a false statement may result in fines and/or imprisonment.

I, _____ (transferor's name, Print) state that the odometer now reads _____ (no tenths) miles and to the best of my knowledge that it reflects the actual mileage unless one of the following statements is checked.

____ (1) I hereby certify that to the best of my knowledge the odometer reading reflect the mileage in excess of its mechanical limits.

____ (2) I hereby certify that the odometer reading is NOT the actual mileage. WARNING—ODOMETER DISCREPANCY.

_____
(Transferor's Signature)

_____
(Printed Name)
Transferor's Address (Street)
_____
(City) _____ (State) ____ (ZIP Code) _____.
Date of Statement _____

PART C. CERTIFICATION

(To Be Completed When parts A and B Have Been Used)

I, _____, (person exercising above powers of attorney, Print), hereby certify that the mileage I have disclosed on the title document is consistent with that provided to me in the above power of attorney. Further, upon examination of the title and any reassignment documents for the vehicle described above, the mileage diclosure I have made on the title pursuant to the power of

attorney is greater than that previously stated on the title and reassignment documents. This certification is not intended to create, nor does it create any new or additional liability under Federal or State law.

_____
(Signature)

_____
(Printed Name)

_____
Address (Street)

(City) _____ (State) ____ (ZIP Code) _____

Date _____

[54 FR 9816, Mar. 8, 1989, as amended at 54 FR 35889, Aug. 30, 1989]

PART 581—BUMPER STANDARD

Sec.
581.1 Scope.
581.2 Purpose.
581.3 Application.
581.4 Definitions.
581.5 Requirements.
581.6 Conditions.
581.7 Test procedures.
581.8 Exemptions.

AUTHORITY: 49 U.S.C. 32502; 322, 30111, 30115, 30117 and 30166; delegation of authority at 49 CFR 1.50.

SOURCE: 42 FR 24059, May 12, 1977, unless otherwise noted.

§581.1 Scope.

This standard establishes requirements for the impact resistance of vehicles in low speed front and rear collisions.

§581.2 Purpose.

The purpose of this standard is to reduce physical damage to the front and rear ends of a passenger motor vehicle from low speed collisions.

§581.3 Application.

This standard applies to passenger motor vehicles other than multipurpose passenger vehicles and low-speed vehicles as defined in 49 CFR part 571.3(b).

[63 FR 33217, June 17, 1998]

§581.4 Definitions.

All terms defined in 49 U.S.C. 32101 are used as defined therein.

Bumper face bar means any component of the bumper system that contacts the impact ridge of the pendulum test device.

[42 FR 24059, May 12, 1977, as amended at 64 FR 2862, Jan. 19, 1999]

§581.5 Requirements.

(a) Each vehicle shall meet the damage criteria of §§581.5(c)(1) through 581.5(c)(9) when impacted by a pendulum-type test device in accordance with the procedures of §581.7(b), under the conditions of §581.6, at an impact speed of 1.5 m.p.h., and when impacted by a pendulum-type test device in accordance with the procedures of §581.7(a) at 2.5 m.p.h., followed by an impact into a fixed collision barrier that is perpendicular to the line of travel of the vehicle, while traveling longitudinally forward, then longitudinally rearward, under the conditions of §581.6, at 2.5 m.p.h.

(b) [Reserved]

(c) Protective criteria. (1) Each lamp or reflective device except license plate lamps shall be free of cracks and shall comply with applicable visibility requirements of S5.3.1.1 of Standard No. 108 (§571.108 of this chapter). The aim of each headlamp installed on the vehicle shall be adjustable to within the beam aim inspection limits specified in Table 1 of SAE Recommended Practice J599 AUG97, measured with the aiming method appropriate for that headlamp.

(2) The vehicle's hood, trunk, and doors shall operate in the normal manner.

(3) The vehicle's fuel and cooling systems shall have no leaks or constricted fluid passages and all sealing devices and caps shall operate in the normal manner.

(4) The vehicle's exhaust system shall have no leaks or constrictions.

(5) The vehicle's propulsion, suspension, steering, and braking systems shall remain in adjustment and shall operate in the normal manner.

(6) A pressure vessel used to absorb impact energy in an exterior protection system by the accumulation of gas pressure or hydraulic pressure shall not suffer loss of gas or fluid accompanied by separation of fragments from the vessel.

(7) The vehicle shall not touch the test device, except on the impact ridge shown in Figures 1 and 2, with a force

that exceeds 2000 pounds on the combined surfaces of Planes A and B of the test device.

(8) The exterior surfaces shall have no separations of surface materials, paint, polymeric coatings, or other covering materials from the surface to which they are bonded, and no permanent deviations from their original contours 30 minutes after completion of each pendulum and barrier impact, except where such damage occurs to the bumper face bar and the components and associated fasteners that directly attach the bumper face bar to the chassis frame.

(9) Except as provided in § 581.5(c)(8), there shall be no breakage or release of fasteners or joints.

[42 FR 24059, May 12, 1977, as amended at 42 FR 38909, Aug. 1, 1977; 43 FR 40231, Sept. 11, 1978; 47 FR 21837, May 20, 1982; 64 FR 16360, Apr. 5, 1999; 64 FR 49092, Sept. 10, 1999]

§ 581.6 Conditions.

The vehicle shall meet the requirements of § 581.5 under the following conditions.

(a) *General.* (1) The vehicle is at unloaded vehicle weight.

(2) The front wheels are in the straight ahead position.

(3) Tires are inflated to the vehicle manufacturer's recommended pressure for the specified loading condition.

(4) Brakes are disengaged and the transmission is in neutral.

(5) Trailer hitches, license plate brackets, and headlamp washers are removed from the vehicle. Running lights, fog lamps, and equipment mounted on the bumper face bar are removed from the vehicle if they are optional equipment.

(b) *Pendulum test conditions.* The following conditions apply to the pendulum test procedures of § 581.7 (a) and (b).

(1) The test device consists of a block with one side contoured as specified in Figure 1 and Figure 2 with the impact ridge made of A1S1 4130 steel hardened to 34 Rockwell ''C.'' The impact ridge and the surfaces in Planes A and B of the test device are finished with a surface roughness of 32 as specified by SAE Recommended Practice J449A, June 1963. From the point of release of the device until the onset of rebound, the pendulum suspension system holds Plane A vertical, with the arc described by any point on the impact line lying in a vertical plane (for § 581.7(a), longitudinal; for § 581.7(b), at an angle of 30° to a vertical longitudinal plane) and having a constant radius of not less than 11 feet.

(2) With Plane A vertical, the impact line shown in Figures 1 and 2 is horizontal at the same height as the test device's center of percussion.

(3) The effective impacting mass of the test device is equal to the mass of the tested vehicle.

(4) When impacted by the test device, the vehicle is at rest on a level rigid concrete surface.

(c) *Barrier test condition.* At the onset of a barrier impact, the vehicle's engine is operating at idling speed in accordance with the manufacturer's specifications. Vehicle systems that are not necessary to the movement of the vehicle are not operating during impact.

(Authority: Sec. 102, Pub. L. 92–513, 86 Stat. 947 (15 U.S.C. 1912); secs. 103, 119, Pub. L. 89–563, 80 Stat. 718 (15 U.S.C. 1392, 1407); delegation of authority at 49 CFR 1.50 and 501.7)

[42 FR 24059, May 12, 1977, as amended at 42 FR 38909, Aug. 1, 1977; 48 FR 43331, Sept. 23, 1983]

§ 581.7 Test procedures.

(a) *Longitudinal impact test procedures.* (1) Impact the vehicle's front surface and its rear surface two times each with the impact line at any height from 16 to 20 inches, inclusive, in accordance with the following procedure.

(2) For impacts at a height of 20 inches, place the test device shown in Figure 1 so that Plane A is vertical and the impact line is horizontal at the specified height.

(3) For impacts at a height between 20 inches and 16 inches, place the test device shown in Figure 2 so that Plane A is vertical and the impact line is horizontal at a height within the range.

(4) For each impact, position the test device so that the impact line is at least 2 inches apart in vertical direction from its position in any prior impact, unless the midpoint of the impact line with respect to the vehicle is to be more than 12 inches apart laterally from its position in any prior impact.

(5) For each impact, align the vehicle so that it touches, but does not move, the test device, with the vehicle's longitudinal centerline perpendicular to the plane that includes Plane A of the test device and with the test device inboard of the vehicle corner test positions specified in §581.7(b).

(6) Move the test device away from the vehicle, then release it to impact the vehicle.

(7) Perform the impacts at intervals of not less than 30 minutes.

(b) *Corner impact test procedure.* (1) Impact a front corner and a rear corner of the vehicle once each with the impact line at a height of 20 inches and impact the other front corner and the other rear corner once each with the impact line at any height from 16 to 20 inches, inclusive, in accordance with the following procedure.

(2) For an impact at a height of 20 inches, place the test device shown in Figure 1 so that Plane A is vertical and the impact line is horizontal at the specified height.

(3) For an impact at a height between 16 inches and 20 inches, place the test device shown in Figure 2 so that Plane A is vertical and the impact line is horizontal at a height within the range.

(4) Align the vehicle so that a vehicle corner touches, but does not move, the lateral center of the test device with Plane A of the test device forming an angle of 60 degrees with a vertical longitudinal plane.

(5) Move the test device away from the vehicle, then release it to impact the vehicle.

(6) Perform the impact at intervals of not less than 30 minutes.

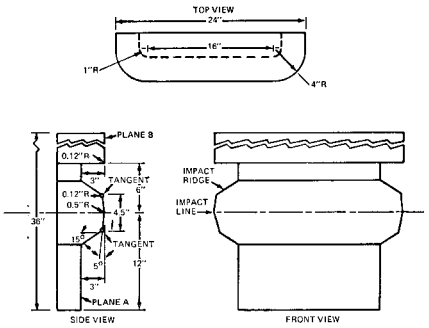

FIGURE 1

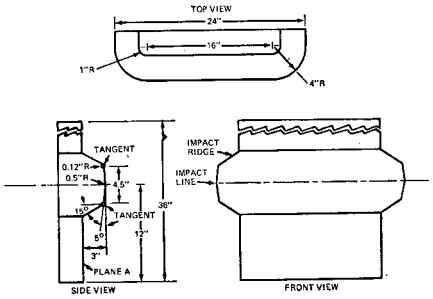

FIGURE 2

[42 FR 24059, May 12, 1977, as amended at 42 FR 38909, Aug. 1, 1977]

§581.8 Exemptions.

A manufacturer of a passenger motor vehicle to which a bumper standard issued under this part applies may apply to the Administrator:

(a) For rulemaking as provided in part 552 of this chapter to exempt a class of passenger motor vehicles from all or any part of a bumper standard issued under this part on the basis that the class of vehicles has been manufactured for a special use and that compliance with the standard would unreasonably interfere with the special use of the class of vehicle; or

(b) To exempt a make or model of passenger motor vehicle on the basis set forth in paragraph (a) of this section or part 555 of this chapter.

(c) An application filed for exemption on the basis of paragraph (a) of this section shall contain the information specified in § 555.5 of this chapter, and set forth data, views, and arguments in support that the vehicle has been manufactured for a special use and that compliance with the bumper standard would interfere unreasonably with the special use of the vehicle.

(d) An application filed for exemption under part 555 of this chapter shall be filed in accordance with the requirements of that part.

(e) The NHTSA shall process exemption applications in accordance with § 555.7 of this chapter. An exemption granted a manufacturer on the basis of paragraph (a) of this section is indefinite in length but expires when the manufacturer ceases production of the exempted vehicle, or when the exempted vehicle as produced has been so modified from its original design that the Administrator decides that it is no longer manufactured for the special use upon which the application for its exemption was based. The Administrator may terminate an exemption in the manner set forth in §§ 555.8(c) and 555.8(f) of this chapter, and for the reasons set forth in § 555.8(d) of this chapter. An exempted vehicle shall be labeled in accordance with § 555.9 of this chapter. Information relating to an application shall be available to the public in the manner specified in § 555.10 of this chapter.

[64 FR 2862, Jan. 19, 1999]

PART 582—INSURANCE COST INFORMATION REGULATION

Sec.
582.1 Scope.
582.2 Purpose.
582.3 Definitions.
582.4 Requirements.
582.5 Information form.

AUTHORITY: 49 U.S.C. 32303; delegation of authority at 49 CFR 1.50(f).

SOURCE: 40 FR 4918, Feb. 3, 1975, unless otherwise noted.

§ 582.1 Scope.

This part requires automobile dealers to make available to prospective purchasers information reflecting differences in insurance costs for different makes and models of passenger motor vehicles based upon differences in damage susceptibility and crashworthiness, pursuant to section 201(e) of the Motor Vehicle Information and Cost Savings Act (15 U.S.C. 1941(e)), herein ''the Cost Savings Act.''

§ 582.2 Purpose.

The purpose of this part is to enable prospective purchasers to compare differences in auto insurance costs for the various makes and models of passenger motor vehicles, based upon differences in damage susceptibility and crashworthiness, and to realize any savings in collision insurance resulting from differences in damageability, and any savings in medical payment insurance resulting from differences in crashworthiness.

§ 582.3 Definitions.

(a) *Statutory definitions.* All terms used in this part which are defined in section 2 of the Cost Savings Act are used as so defined.

(b) *Definitions used in this part.* (1) *Automobile dealer* means any person who engages in the retail sale of new automobiles as a trade or business.

(2) *Collision insurance* means insurance that reimburses the insured party for physical damage to his property resulting from automobile accidents.

(3) *Insurance cost* means the insurance premium rate, as expressed in appropriate indices, for collision and medical payment, including personal injury protection in no-fault states.

(4) *Medical payment insurance* means insurance that reimburses the insured party for medical expenses sustained by himself, his family, and his passengers in automobile accidents.

[40 FR 4918, Feb. 3, 1975, as amended at 58 FR 12550, Mar. 5, 1993]

§ 582.4 Requirements.

(a) Each automobile dealer shall make available to prospective purchasers, without charge, the information specified in § 582.5, at each location where he or she offers new vehicles for sale.

(b) Each automobile dealer shall maintain a sufficient quantity of booklets containing the information specified in § 582.5 to assure that they are available for retention by prospective purchasers.

(c) The booklets shall be revised to reflect the updated data published by NHTSA each year within 30 days of NHTSA's publication of the data in the FEDERAL REGISTER.

[58 FR 12550, Mar. 5, 1993]

§ 582.5 Information form.

The information made available pursuant to § 582.4 shall be presented in writing in the English language and in not less than 10-point type. It shall be presented in the format set forth below, and shall include the complete explanatory text and the updated data published annually by NHTSA.

MARCH [YEAR TO BE INSERTED]

COMPARISON OF DIFFERENCES IN INSURANCE COSTS FOR PASSENGER CARS, STATION WAGONS/PASSENGER VANS, PICKUPS AND UTILITY VEHICLES ON THE BASIS OF DAMAGE SUSCEPTIBILITY

The National Highway Traffic Safety Administration (NHTSA) has provided the information in this booklet in compliance with Federal law as an aid to consumers considering the purchase of a new vehicle. The booklet compares differences in insurance costs for different makes and models of passenger cars, station wagons/passenger vans, pickups, and utility vehicles on the basis of damage susceptibility. However, it does not indicate a vehicle's relative safety.

The following table contains the best available information regarding the effect of damage susceptibility on insurance premiums. It was taken from data compiled by the Highway Loss Data Institute (HLDI) in its December [YEAR TO BE INSERTED] *Insurance Collision Report,* and reflects the collision loss experience of passenger cars, utility vehicles, light trucks, and vans sold in the United States in terms of the average loss payment per insured vehicle year for [THREE APPROPRIATE YEARS TO BE INSERTED]. NHTSA has not verified the data in this table.

The table represents vehicles' collision loss experience in relative terms, with 100 representing the average for all passenger vehicles. Thus, a rating of 122 reflects a collision loss experience that is 22 percent higher (worse) than average, while a rating of 96 reflects a collision loss experience that is 4 percent lower (better) than average. The table is not relevant for models that have been substantially redesigned for [YEAR TO BE INSERTED], and it does not include information about models without enough claim experience.

Although many insurance companies use the HLDI information to adjust the ''base rate'' for the collision portion of their insurance premiums, the amount of any such adjustment is usually small. It is unlikely that your total premium will vary more than ten percent depending upon the collision loss experience of a particular vehicle.

If you do not purchase collision coverage or your insurance company does not use the HLDI information, your premium will not vary at all in relation to these rankings.

In addition, different insurance companies often charge different premiums for the same driver and vehicle. Therefore, you should contact insurance companies or their agents directly to determine the actual premium that you will be charged for insuring a particular vehicle.

PLEASE NOTE: In setting insurance premiums, insurance companies mainly rely on factors that are not directly related to the vehicle itself (except for its value). Rather, they mainly consider driver characteristics (such as age, gender, marital status, and driving record), the geographic area in which the vehicle is driven, how many miles are traveled, and how the vehicle is used. Therefore, to obtain complete information about insurance premiums, you should contact insurance companies or their agents directly.

Insurance companies do not generally adjust their premiums on the basis of data reflecting the crashworthiness of different vehicles. However, some companies adjust their premiums for personal injury protection and medical payments coverage if the insured vehicle has features that are likely to improve its crashworthiness, such as air bags and automatic seat belts.

Test data relating to vehicle crashworthiness are available from NHTSA's New Car Assessment Program (NCAP). NCAP test results demonstrate relative frontal crash protection in new vehicles. Information on vehicles that NHTSA has tested in the NCAP program can be obtained by calling the agency's toll-free Auto Safety Hotline at (800) 424–9393.

[Insert Table To Be Published Each March by the National Highway Traffic Safety Administration]

If you would like more details about the information in this table, or wish to obtain the complete Insurance Collision Report, please contact HLDI directly, at: Highway Loss Data Institute, 1005 North Glebe Road, Arlington, VA 22201, Tel: (703) 247–1600.

[60 FR 15512, Mar. 24, 1995]

PART 583—AUTOMOBILE PARTS CONTENT LABELING

Sec.
583.1 Scope.
583.2 Purpose.
583.3 Applicability.
583.4 Definitions.
583.5 Label requirements.
583.6 Procedure for determining U.S./Canadian parts content.
583.7 Procedure for determining major foreign sources of passenger motor vehicle equipment.
583.8 Procedure for determining country of origin for engines and transmissions (for purposes of determining the information specified by §§583.5(a)(4) and 583.5(a)(5) only).
583.9 Attachment and maintenance of label.
583.10 Outside suppliers of passenger motor vehicle equipment.
583.11 Allied suppliers of passenger motor vehicle equipment.
583.12 Suppliers of engines and transmissions.
583.13 Supplier certification and certificates.
583.14 Currency conversion rate.
583.15 Joint ownership.
583.16 Maintenance of records.
583.17 Reporting.

AUTHORITY: 49 U.S.C. 32304, 49 CFR 1.50, 501.2(f).

SOURCE: 59 FR 37330, July 21, 1994, unless otherwise noted.

§583.1 Scope.

This part establishes requirements for the disclosure of information relating to the countries of origin of the equipment of new passenger motor vehicles.

§583.2 Purpose.

The purpose of this part is to aid potential purchasers in the selection of new passenger motor vehicles by providing them with information about the value of the U.S./Canadian and foreign parts content of each vehicle, the countries of origin of the engine and transmission, and the site of the vehicle's final assembly.

§583.3 Applicability.

This part applies to manufacturers of new passenger motor vehicles manufactured or imported for sale in the United States, suppliers of passenger motor vehicle equipment, and dealers of new passenger motor vehicles.

§583.4 Definitions.

(a) *Statutory terms*. The terms *allied supplier*, *carline*, *country of origin*, *dealer*, *foreign content*, *manufacturer*, *new passenger motor vehicle*, *of U.S./Canadian origin*, *outside supplier*, *passenger motor vehicle*, *passenger motor vehicle equipment*, *percentage (by value)*, *State*, and *value added in the United States and Canada*, defined in 49 U.S.C. 32304(a), are used in accordance with their statutory meanings except as further defined in paragraph (b) of this section.

(b) *Other terms and further definitions*.

(1) *Administrator* means the Administrator of the National Highway Traffic Safety Administration.

(2) *Allied supplier* means a supplier of passenger motor vehicle equipment that is wholly owned by the manufacturer, or in the case of a joint venture vehicle assembly arrangement, any supplier that is wholly owned by one member of the joint venture arrangement. A supplier is considered to be wholly owned by the manufacturer if a common parent company owns both the manufacturer and the supplier, or if a group of related companies own both the manufacturer and the supplier and no outside interests (interests other than the manufacturer itself or companies which own the manufacturer) own the supplier.

(3) *Carline* means a name denoting a group of vehicles which has a degree of commonality in construction (*e.g.*, body, chassis). Carline does not consider any level of decor or opulence and is not generally distinguished by such characteristics as roof line, number of doors, seats, or windows, except for light duty trucks. Carline is not distinguished by country of manufacture, final assembly point, engine type, or driveline. Light duty trucks are considered to be different carlines than passenger cars. A carline includes all motor vehicles of a given nameplate. Special purpose vehicles, vans, and pickup trucks are classified as separate carlines.

(4) *Final assembly* means all operations involved in the assembly of a vehicle, performed at the final assembly

point including but not limited to assembly of body panels, painting, final chassis assembly, trim installation, except engine and transmission fabrication and assembly and the fabrication of motor vehicle equipment components produced at the same final assembly point using forming processes such as stamping, machining or molding processes.

(5) *Final assembly point* means the plant, factory, or other place, which is a building or series of buildings in close proximity, where a new passenger motor vehicle is produced or assembled from passenger motor vehicle equipment and from which such vehicle is delivered to a dealer or importer in such a condition that all component parts necessary to the mechanical operation of such automobile are included with such vehicle whether or not such component parts are permanently installed in or on such vehicle. For multi-stage vehicles, the final assembly point is the location where the first stage vehicle is assembled.

(6) *Outside supplier* means:

(i) A non-allied supplier of passenger motor vehicle equipment to a manufacturer's allied supplier and

(ii) Anyone other than an allied supplier who ships directly to the manufacturer's final assembly point.

(7) *Passenger motor vehicle equipment* means any system, subassembly, or component received at the final assembly point for installation on, or attachment to, such vehicle at the time of its initial shipment by the manufacturer to a dealer for sale to an ultimate purchaser. Passenger motor vehicle equipment also includes any system, subassembly, or component received by an allied supplier from an outside supplier for incorporation into equipment supplied by the allied supplier to the manufacturer with which it is allied.

(8) *Person* means an individual, partnership, corporation, business trust, or any organized group of persons.

(9) *Ultimate purchaser* means with respect to any new passenger motor vehicle, the first person, other than a dealer purchasing in its capacity as a dealer, who in good faith purchases such new passenger motor vehicle for purposes other than resale.

[59 FR 37330, July 21, 1994, as amended at 64 FR 40780, July 28, 1999]

§ 583.5 Label requirements.

(a) Except as provided in paragraphs (f) and (g) of this section, each manufacturer of new passenger motor vehicles shall cause to be affixed to each passenger motor vehicle manufactured on or after October 1, 1994, a label that provides the following information:

(1) *U.S./Canadian parts content.* The overall percentage, by value, of the passenger motor vehicle equipment that was installed on vehicles within the carline of which the vehicle is part, and that originated in the United States and/or Canada (the procedure for determining U.S./Canadian Parts Content is set forth in § 583.6);

(2) *Major sources of foreign parts content.* The names of any countries other than the United States and Canada which contributed at least 15 percent of the average overall percentage, by value, of the passenger motor vehicle equipment installed on vehicles within the carline of which the vehicle is part, and the percentages attributable to each such country (if there are more than two such countries, the manufacturer need only provide the information for the two countries with the highest percentages; the procedure for determining major foreign sources of passenger motor vehicle equipment is set forth in § 583.7);

(3) *Final assembly point.* The city, state (in the case of vehicles assembled in the United States), and country of the final assembly point of the passenger motor vehicle;

(4) *Country of origin for the engine.* The country of origin of the passenger motor vehicle's engine (the procedure for making this country of origin determination is set forth in § 583.8);

(5) *Country of origin for the transmission.* The country of origin of the passenger motor vehicle's transmission (the procedure for making this country of origin determination is set forth in § 583.8);

(6) *Explanatory note.* A statement which explains that parts content does not include final assembly, distribution, or other non-parts costs.

(b) Except as provided in paragraphs (e), (f) and (g) of this section, the label required under paragraph (a) of this section shall read as follows, with the specified information inserted in the places indicated (except that if there are no major sources of foreign parts content, omit the section ''Major Sources of Foreign Parts Content''):

PARTS CONTENT INFORMATION

For vehicles in this carline:

U.S./Canadian Parts Content: (insert number) %

Major Sources of Foreign Parts Content:

(Name of country with highest percentage): (insert number) %

(Name of country with second highest percentage): (insert number) %

NOTE: Parts content does not include final assembly, distribution, or other non-parts costs.

For this vehicle:

Final Assembly Point: (city, state, country)

Country of Origin:

Engine: (name of country)

Transmission: (name of country)

(c) The percentages required to be provided under paragraph (a) of this section may be rounded by the manufacturer to the nearest 5 percent.

(d) The label required by paragraph (a) of this section shall:

(1) Be placed in a prominent location on each vehicle where it can be read from the exterior of the vehicle with the doors closed, and may be either part of the Monroney price information label required by 15 U.S.C. 1232, part of the fuel economy label required by 15 U.S.C. 2006, or a separate label. A separate label may include other consumer information.

(2)(i) Be printed in letters that have a color that contrasts with the background of the label; and

(ii) Have the information required by paragraphs (a)(1) through (5) of this section vertically centered on the label in boldface capital letters and numerals of 12 point size or larger; and

(iii) Have the information required by paragraph (a)(6) of this section in type that is two points smaller than the information required by paragraphs (a)(1) through (5) of this section.

(3) In the case of a label that is included as part of the Monroney price information label or fuel economy label, or a separate label that includes other consumer information, be separated from all other information on those labels by a solid line that is a minimum of three points in width.

(4) The information required by paragraphs (a)(1) through (6) of this section shall be immediately preceded by the words, ''PARTS CONTENT INFORMATION,'' in boldface, capital letters that are 12 point size or larger.

(e) *Carlines assembled in the U.S./Canada and in one or more other countries.* (1) If a carline is assembled in the U.S. and/or Canada, and in one or more other countries, the manufacturer may, at its option, add the following additional information at the end of the explanatory note specified in (a)(6), with the specified information inserted in the places indicated:

This carline is assembled in the U.S. and/or Canada, and in [insert name of each other country]. The U.S./Canadian parts content for the portion of the carline assembled in [insert name of country, treating the U.S. and Canada together, i.e., U.S./Canada] is [____]%.

(2) A manufacturer selecting this option shall divide the carline for purposes of this additional information into the following portions: the portion assembled in the U.S./Canada and the portions assembled in each other country.

(3) A manufacturer selecting this option for a particular carline shall provide the specified additional information on the labels of all vehicles within the carline, providing the U.S./Canadian content that corresponds to the U.S./Canadian content of the manufacturing location shown as the final assembly point (with all U.S. and Canadian locations considered as a single assembly point) on the label.

(f) A final stage manufacturer of vehicles assembled in multiple stages need not provide the U.S./Canadian Parts Content or Major Foreign Sources items of the label otherwise required under paragraphs (a)(1) and (2) of this section.

(g) A manufacturer that produces a total of fewer than 1000 passenger motor vehicles in a model year need not provide the U.S./Canadian Parts Content or Major Foreign Sources items of the label otherwise required

under paragraphs (a)(1) and (2) of this section.

(h) *Requests for information and certifications relevant to information on the label.* (1) Each manufacturer and allied supplier shall request its suppliers to provide directly to it the information and certifications specified by this part which are necessary for the manufacturer/allied supplier to carry out its responsibilities under this part. The information shall be requested sufficiently early to enable the manufacturer to meet the timing requirements specified by this part.

(2) For requests made by manufacturers or allied suppliers to outside suppliers:

(i) The requester shall indicate that the request is being made pursuant to 49 CFR part 583, and that the regulation is administered by the National Highway Traffic Safety Administration;

(ii) The requester shall indicate that 49 CFR part 583 requires outside suppliers to provide specified information upon the request of a manufacturer or allied supplier to which it supplies passenger motor vehicle equipment and that, to the best of the requester's knowledge, the outside supplier is required to provide the requested information;

(iii) If any information other than that required by 49 CFR part 583 is requested, the requester shall indicate which information is required by 49 CFR part 583 and which is not;

(iv) The requester shall indicate that 49 CFR part 583 specifies that while information may be requested by an earlier date, the outside supplier is not required to provide the information until the date specified by the requester or the date 45 days after receipt of the request, whichever is later.

(i) *Carlines assembled in more than one assembly plant.* (1) If a carline is assembled in more than one assembly plant, the manufacturer may, at its option, add the following additional information at the end of the explanatory note specified in paragraph (a)(6) of this section, with the specified information inserted in the places indicated:

Two or more assembly plants produce the vehicles in this carline. The vehicles assembled at the plant where this vehicle was assembled have a U.S./Canadian parts content of [__]%.

(2) A manufacturer selecting this option shall divide the carline for purposes of this additional information into portions representing each assembly plant.

(3) A manufacturer selecting this option for a particular carline shall provide the specified additional information on the labels of all vehicles within the carline.

[59 FR 37330, July 21, 1994, as amended at 60 FR 14229, Mar. 16, 1995; 60 FR 47893, Sept. 15, 1995; 64 FR 40780, July 28, 1999]

§ 583.6 Procedure for determining U.S./Canadian parts content.

(a) Each manufacturer, except as specified in § 583.5 (f) and (g), shall determine the percentage U.S./Canadian Parts Content for each carline on a model year basis. This determination shall be made before the beginning of each model year. Items of equipment produced at the final assembly point (but not as part of final assembly) are treated in the same manner as if they were supplied by an allied supplier. All value otherwise added at the final assembly point and beyond, including all final assembly costs, is excluded from the calculation of U.S./Canadian parts content. The country of origin of nuts, bolts, clips, screws, pins, braces, gasoline, oil, blackout, phosphate rinse, windshield washer fluid, fasteners, tire assembly fluid, rivets, adhesives, grommets, and wheel weights, used in final assembly of the vehicle, is considered to be the country where final assembly of the vehicle takes place.

(b) *Determining the value of items of equipment.*

(1) For items of equipment received at the final assembly point, the value is the price paid by the manufacturer for the equipment as delivered to the final assembly point.

(2) For items of equipment produced at the final assembly point (but not as part of final assembly), the value is the fair market price that a manufacturer of similar size and location would pay a supplier for such equipment.

(3) For items of equipment received at the factory or plant of an allied supplier, the value is the price paid by the

allied supplier for the equipment as delivered to its factory or plant.

(c) *Determining the U.S./Canadian percentage of the value of items of equipment.*

(1) Equipment supplied by an outside supplier to a manufacturer or allied supplier is considered:

(i) 100 percent U.S./Canadian, if 70 percent or more of its value is added in the United States and/or Canada; and

(ii) To otherwise have the actual percent of its value added in the United States and/or Canada, rounded to the nearest five percent.

(2) The extent to which an item of equipment supplied by an allied supplier is considered U.S./Canadian is determined by dividing the value added in the United States and/or Canada by the total value of the equipment. The resulting number is multiplied by 100 to determine the percentage U.S./Canadian content of the equipment.

(3) In determining the value added in the United States and/or Canada of equipment supplied by an allied supplier, any equipment that is delivered to the allied supplier by an outside supplier and is incorporated into the allied supplier's equipment, is considered:

(i) 100 percent U.S./Canadian, if at least 70 percent of its value is added in the United States and/or Canada; and

(ii) To otherwise have the actual percent of its value added in the United States and/or Canada, rounded to the nearest five percent.

(4)(i) Value added in the United States and/or Canada by an allied supplier or outside supplier includes—

(A) The value added in the U.S. and/or Canada for materials used by the supplier, determined according to (4)(ii) for outside suppliers and (4)(iii) for allied suppliers, plus,

(B) For passenger motor vehicle equipment assembled or produced in the U.S. or Canada, the value of the difference between the price paid by the manufacturer or allied supplier for the equipment, as delivered to its factory or plant, and the total value of the materials in the equipment.

(ii) Outside suppliers of passenger motor vehicle equipment will determine the value added in the U.S. and/or Canada for materials in the equipment as specified in paragraphs (A) and (B).

(A)(*1*) For any material used by the supplier which was produced or assembled in the U.S. or Canada, the supplier will subtract from the total value of the material any value that was not added in the U.S. and/or Canada. The determination of the value that was not added in the U.S. and/or Canada shall be a good faith estimate based on information that is available to the supplier, e.g., information in its records, information it can obtain from its suppliers, the supplier's knowledge of manufacturing processes, etc.

(*2*) The supplier shall consider the amount of value added and the location in which that value was added—

(*i*) At each earlier stage, counting from the time of receipt of a material by the supplier, back to and including the two closest stages each of which represented a substantial transformation into a new and different product with a different name, character and use.

(*ii*) The value of materials used to produce a product in the earliest of these two substantial transformation stages shall be treated as value added in the country in which that stage occurred.

(B) For any material used by the supplier which was imported into the United States or Canada from a third country, the value added in the United States and/or Canada is presumed to be zero. However, if documentation is available to the supplier which identifies value added in the United States and/or Canada for that material (determined according to the principles set forth in (A), such value added in the United States and/or Canada is counted.

(iii) Allied suppliers of passenger motor vehicle equipment shall determine the value that is added in the U.S. and/or Canada for materials in the equipment in accordance with (c)(3).

(iv) For the minor items listed in the § 583.4 definition of ''passenger motor vehicle equipment'' as being excluded from that term, outside and allied suppliers may, to the extent that they incorporate such items into their equipment, treat the cost of the minor items as value added in the country of assembly.

(v) For passenger motor vehicle equipment which is imported into the territorial boundaries of the United States or Canada from a third country, the value added in the United States and/or Canada is presumed to be zero. However, if documentation is available to the supplier which identifies value added in the United States and/or Canada for that equipment (determined according to the principles set forth in the rest of (c)(4)), such value added in the United States and/or Canada is counted.

(vi) The payment of duty does not result in value added in the United States and/or Canada.

(5) Except as provided in paragraph (c)(6) of this section, if a manufacturer or allied supplier does not receive information from one or more of its suppliers concerning the U.S./Canadian content of particular equipment, the U.S./Canadian content of that equipment is considered zero. This provision does not affect the obligation of manufacturers and allied suppliers to request this information from their suppliers or the obligation of the suppliers to provide the information.

(6) If a manufacturer or allied supplier requests information in a timely manner from one or more of its outside suppliers concerning the U.S./Canadian content of particular equipment, but does not receive that information despite a good faith effort to obtain it, the manufacturer or allied supplier may make its own good faith value added determinations, subject to the following provisions:

(i) The manufacturer or allied supplier shall make the same value added determinations as would be made by the outside supplier;

(ii) The manufacturer or allied supplier shall consider the amount of value added and the location in which the value was added for all of the stages that the outside supplier would be required to consider;

(iii) The manufacturer or allied supplier may determine that particular value is added in the United States and/or Canada only if it has a good faith basis to make that determination;

(iv) A manufacturer and its allied suppliers may, on a combined basis, make value added determinations for no more than 10 percent, by value, of a carline's total parts content from outside suppliers;

(v) Value added determinations made by a manufacturer or allied supplier under this paragraph shall have the same effect as if they were made by the outside supplier;

(vi) This provision does not affect the obligation of outside suppliers to provide the requested information.

(d) *Determination of the U.S./Canadian percentage of the total value of a carline's passenger motor vehicle equipment.* The percentage of the value of a carline's passenger motor vehicle equipment that is U.S./Canadian is determined by—

(1) Adding the total value of all of the equipment (regardless of country of origin) expected to be installed in that carline during the next model year;

(2) Dividing the value of the U.S./Canadian content of such equipment by the amount calculated in paragraph (d)(1) of this section, and

(3) Multiplying the resulting number by 100.

(e) *Alternative calculation procedures.* (1) A manufacturer may submit a petition to use calculation procedures based on representative or statistical sampling, as an alternative to the calculation procedures specified in this section to determine U.S./Canadian parts content and major sources of foreign parts content.

(2) Each petition must—

(i) Be submitted at least 120 days before the manufacturer would use the alternative procedure;

(ii) Be written in the English language;

(iii) Be submitted in three copies to: Administrator, National Highway Traffic Safety Administration, 400 Seventh Street SW., Washington, DC 20590;

(iv) State the full name and address of the manufacturer;

(v) Set forth in full the data, views and arguments of the manufacturer that would support granting the petition, including—

(A) the alternative procedure, and

(B) analysis demonstrating that the alternative procedure will produce substantially equivalent results to the procedure set forth in this section;

(vi) Specify and segregate any part of the information and data submitted in the petition that is requested to be withheld from public disclosure in accordance with part 512 of this chapter (the basic alternative procedure and basic supporting analysis must be provided as public information, but confidential business information may also be used in support of the petition).

(3) The NHTSA publishes in the FEDERAL REGISTER, affording opportunity for comment, a notice of each petition containing the information required by this part. A copy of the petition is placed in the public docket. However, if NHTSA finds that a petition does not contain the information required by this part, it so informs the petitioner, pointing out the areas of insufficiency and stating that the petition will not receive further consideration until the required information is submitted.

(4) If the Administrator determines that the petition does not contain adequate justification, he or she denies it and notifies the petitioner in writing, explaining the reasons for the denial. A copy of the letter is placed in the public docket.

(5) If the Administrator determines that the petition contains adequate justification, he or she grants it, and notifies the petitioner in writing. A copy of the letter is placed in the public docket.

(6) The Administrator may attach such conditions as he or she deems appropriate to a grant of a petition, which the manufacturer must follow in order to use the alternative procedure.

[60 FR 47894, Sept. 15, 1995; as amended at 61 FR 46390, Sept. 3, 1996; 62 FR 33761, June 23, 1997; 64 FR 40780, July 28, 1999]

§ 583.7 Procedure for determining major foreign sources of passenger motor vehicle equipment.

(a) Each manufacturer, except as specified in § 583.5(f) and (g), shall determine the countries, if any, which are major foreign sources of passenger motor vehicle equipment and the percentages attributable to each such country for each carline on a model year basis, before the beginning of each model year. The manufacturer need only determine this information for the two such countries with the highest percentages. Items of equipment produced at the final assembly point (but not as part of final assembly) are treated in the same manner as if they were supplied by an allied supplier. In making determinations under this section, the U.S. and Canada are treated together as if they were one (non-foreign) country. The country of origin of nuts, bolts, clips, screws, pins, braces, gasoline, oil, blackout, phosphate rinse, windshield washer fluid, fasteners, tire assembly fluid, rivets, adhesives, grommets, and wheel weights, used in final assembly of the vehicle, is considered to be the country where final assembly of the vehicle takes place.

(b) *Determining the value of items of equipment.* The value of each item of equipment is determined in the manner specified in § 583.6(b).

(c) *Determining the country of origin of items of equipment.*(1) Except as provided in (c)(2), the country of origin of each item is the country which contributes the greatest amount of value added to that item (treating the U.S. and Canada together).

(2) Instead of making country of origin determinations in the manner specified in (c)(1), a manufacturer may, at its option, use any other methodology that is used for customs purposes (U.S. or foreign), so long as a consistent methodology is employed for all items of equipment, and the U.S. and Canada are treated together.

(d) *Determination of the percentage of the total value of a carline's passenger motor vehicle equipment which is attributable to individual countries other than the U.S. and Canada.* The percentage of the value of a carline's passenger motor vehicle equipment that is attributable to each country other than the U.S. and Canada is determined on a model year basis by—

(1) Adding up the total value of all of the passenger motor vehicle equipment (regardless of country of origin) expected to be installed in that carline during the next model year;

(2) Adding up the value of such equipment which originated in each country other than the U.S. or Canada;

(3) Dividing the amount calculated in paragraph (d)(2) of this section for each

country by the amount calculated in paragraph (d)(1) of this section, and multiplying each result by 100.

(e) A country is a major foreign source of passenger motor vehicle equipment for a carline only if the country is one other than the U.S. or Canada and if 15 or more percent of the total value of the carline's passenger motor vehicle equipment is attributable to the country.

(f) In determining the percentage of the total value of a carline's passenger motor vehicle equipment which is attributable to individual countries other than the U.S. and Canada, no value which is counted as U.S./Canadian parts content is also counted as being value which originated in a country other than the U.S. or Canada.

[59 FR 37330, July 21, 1994, as amended at 60 FR 47895, Sept. 15, 1995; 64 FR 40781, July 28, 1999]

§ 583.8 Procedure for determining country of origin for engines and transmissions (for purposes of determining the information specified by §§ 583.5(a)(4) and 583.5(a)(5) only).

(a) Each supplier of an engine or transmission shall determine the country of origin once a year for each engine and transmission. The origin of engines shall be calculated for engines of the same displacement produced at the same plant. The origin for transmissions shall be calculated for transmissions of the same type produced at the same plant. Transmissions are of the same type if they have the same attributes including: Drive line application, number of forward gears, controls, and layout. The U.S. and Canada are treated separately in making such determination.

(b) The value of an engine or transmission is determined by first adding the prices paid by the manufacturer of the engine/transmission for each component comprising the engine/transmission, as delivered to the assembly plant of the engine/transmission, and the fair market value of each individual part produced at the plant. The assembly and labor costs incurred for the final assembly of the engine/transmission are then added to determine the value of the engine or transmission.

(c) *Determining the country of origin of components.*

(1) Except as provided in (c)(2), the country of origin of each item of equipment is the country which contributes the greatest amount of value added to that item (the U.S. and Canada are treated separately).

(2) Instead of making country of origin determinations in the manner specified in (c)(1), a manufacturer may, at its option, use any other methodology that is used for customs purposes (U.S. or foreign), so long as a consistent methodology is employed for all components.

(d) *Determination of the total value of an engine/transmission which is attributable to individual countries.* The value of an engine/transmission that is attributable to each country is determined by adding the total value of all of the components installed in that engine/transmission which originated in that country. For the country where final assembly of the engine/transmission takes place, the assembly and labor costs incurred for such final assembly are also added.

(e) The country of origin of each engine and the country of origin of each transmission is the country which contributes the greatest amount of value added to that item of equipment (the U.S. and Canada are treated separately).

[59 FR 37330, July 21, 1994, as amended at 60 FR 47895, Sept. 15, 1995; 64 FR 40781, July 28, 1999]

§ 583.9 Attachment and maintenance of label.

(a) *Attachment of the label.*

(1) Except as provided in (a)(2), each manufacturer shall cause the label required by § 583.5 to be affixed to each new passenger motor vehicle before the vehicle is delivered to a dealer.

(2) For vehicles which are delivered to a dealer prior to the introduction date for the model in question, each manufacturer shall cause the label required by § 583.5 to be affixed to the vehicle prior to such introduction date.

(b) *Maintenance of the label.*

(1) Each dealer shall cause to be maintained each label on the new passenger motor vehicles it receives until after such time as a vehicle has been sold to a consumer for purposes other than resale.

(2) If the manufacturer of a passenger motor vehicle provides a substitute label containing corrected information, the dealer shall replace the original label with the substitute label.

(3) If a label becomes damaged so that the information it contains is not legible, the dealer shall replace it with an identical, undamaged label.

§ 583.10 Outside suppliers of passenger motor vehicle equipment.

(a) For each unique type of passenger motor vehicle equipment for which a manufacturer or allied supplier requests information, the outside supplier shall provide the manufacturer/allied supplier with a certificate providing the following information:

(1) The name and address of the supplier;

(2) A description of the unique type of equipment;

(3) The price of the equipment to the manufacturer or allied supplier;

(4) A statement that the equipment has, or does not have, at least 70 percent of its value added in the United States and Canada, determined under § 583.6(c);

(5) For equipment which has less than 70 percent of its value added in the United States and Canada,

(i) The country of origin of the equipment, determined under § 583.7(c); and

(ii) The percent of its value added in the United States and Canada, to the nearest 5 percent, determined under § 583.6(c).

(6) For equipment that may be used in an engine or transmission, the country of origin of the equipment, determined under § 583.8(c);

(7) A certification for the information, pursuant to § 583.13, and the date (at least giving the month and year) of the certification.

(8) A single certificate may cover multiple items of equipment.

(b) The information and certification required by paragraph (a) of this section shall be provided to the manufacturer or allied supplier no later than 45 days after receipt of the request, or the date specified by the manufacturer/allied supplier, whichever is later. (A manufacturer or allied supplier may request that the outside supplier voluntarily provide the information and certification at an earlier date.)

(c)(1) Except as provided in paragraph (c)(2) of this section, the information provided in the certificate shall be the supplier's best estimates of price, content, and country of origin for the unique type of equipment expected to be supplied during the 12 month period beginning on the first July 1 after receipt of the request. If the unique type of equipment supplied by the supplier is expected to vary with respect to price, content, and country of origin during that period, the supplier shall base its estimates on expected averages for these factors.

(2) The 12 month period specified in (c)(1) may be varied in time and length by the manufacturer or allied supplier if it determines that the alteration is not likely to result in less accurate information being provided to consumers on the label required by this part.

(d) For outside suppliers of engines and transmissions, the information and certification required by this section is in addition to that required by § 583.12.

[59 FR 37330, July 21, 1994, as amended at 64 FR 40781, July 28, 1999]

§ 583.11 Allied suppliers of passenger motor vehicle equipment.

(a) For each unique type of passenger motor vehicle equipment which an allied supplier supplies to the manufacturer with which it is allied, the allied supplier shall provide the manufacturer with a certificate providing the following information:

(1) The name and address of the supplier;

(2) A description of the unique type of equipment;

(3) The price of the equipment to the manufacturer;

(4) The percentage U.S./Canadian content of the equipment, determined under § 583.6(c);

(5) The country of origin of the equipment, determined under § 583.7(c);

(6) For equipment that may be used in an engine or transmission, the country of origin of the equipment, determined under § 583.8(c);

(7) A certification for the information, pursuant to § 583.13, and the date (at least giving the month and year) of the certification.

(8) A single certificate may cover multiple items of equipment.

(b)(1) Except as provided in paragraph (b)(2) of this section, the information provided in the certificate shall be the supplier's best estimates of price, content, and country of origin for the unique type of equipment expected to be supplied during the 12 month period beginning on the first July 1 after receipt of the request. If the unique type of equipment supplied by the supplier is expected to vary with respect to price, content, and country of origin during that period, the supplier shall base its estimates on expected averages for these factors.

(2) The 12 month period specified in (b)(1) may be varied in time and length by the manufacturer if it determines that the alteration is not likely to result in less accurate information being provided to consumers on the label required by this part.

(d) For allied suppliers of engines and transmissions, the information and certification required by this section is in addition to that required by § 583.12.

§ 583.12 Suppliers of engines and transmissions.

(a) For each engine or transmission for which a manufacturer or allied supplier requests information, the supplier of such engine or transmission shall provide the manufacturer or allied supplier with a certificate providing the following information:

(1) The name and address of the supplier;

(2) A description of the engine or transmission;

(3) The country of origin of the engine or transmission, determined under § 583.8;

(4) A certification for the information, pursuant to § 583.13, and the date (at least giving the month and year) of the certification.

(b) The information provided in the certificate shall be the supplier's best estimate of country of origin for the unique type of engine or transmission. If the unique type of equipment used in the engine or transmission is expected to vary with respect to price, content, and country of origin during that period, the supplier shall base its country of origin determination on expected averages for these factors.

(c) The information and certification required by paragraph (a) of this section shall be provided by outside suppliers to the manufacturer or allied supplier no later than 45 days after receipt of the request, or the date specified by the manufacturer/allied supplier, whichever is later. (A manufacturer or allied supplier may request that the outside supplier voluntarily provide the information and certification at an earlier date.)

(d) In the event that, during a model year, a supplier of engines or transmissions produces an engine of a new displacement or transmission of a new type or produces the same engine displacement or transmission in a different plant, the supplier shall notify the manufacturer of the origin of the new engine or transmission prior to shipment of the first engine or transmission that will be installed in a passenger motor vehicle intended for public sale.

(e) A single certificate may cover multiple engines or transmissions. If a certificate provided in advance of the delivery of an engine or transmission becomes inaccurate because of changed circumstances, a corrected certificate shall be provided no later than the time of delivery of the engine or transmission.

(f) For suppliers of engines and transmissions, the information and certification required by this section is in addition to that required by §§ 583.10 and 583.11.

§ 583.13 Supplier certification and certificates.

Each supplier shall certify the information on each certificate provided under §§ 583.10, 583.11, and 583.12 by including the following phrase on the certificate: ''This information is certified in accordance with DOT regulations.'' The phrase shall immediately precede the other information on the

certificate. The certificate may be submitted to a manufacturer or allied supplier in any mode (e.g., paper, electronic) provided the mode contains all information in the certificate.

§ 583.14 Currency conversion rate.

For purposes of calculations of content value under this part, manufacturers and suppliers shall calculate exchange rates using the methodology set forth in this section.

(a) *Manufacturers.* (1) Unless a manufacturer has had a petition approved by the Environmental Protection Agency under 40 CFR 600.511–80(b)(1), for all calculations made by the manufacturer as a basis for the information provided on the label required by § 583.5, manufacturers shall take the mean of the exchange rates in effect at the end of each quarter set by the Federal Reserve Bank of New York for twelve calendar quarters prior to and including the calendar quarter ending one year prior to the date that the manufacturer submits information for a carline under § 583.17.

(2) A manufacturer that has had a petition approved by the Environmental Protection Agency under 40 CFR 600.511–80(b)(1), which provides for a different method of determining exchange rates, shall use the same method as a basis for the information provided on the label required by § 583.5, and shall inform the Administrator of the exchange rate method it is using at the time the information required by § 583.5 is submitted.

(b) *Suppliers.* For all calculations underlying the information provided on each certificate required by §§ 583.10, 583.11, and 583.12, suppliers shall take the mean of the exchange rates in effect at the end of each quarter set by the Federal Reserve Bank of New York for twelve calendar quarters prior to and including the calendar quarter ending one year prior to the date of such certificate.

§ 583.15 Joint ownership.

(a) A carline jointly owned and/or produced by more than one manufacturer shall be attributed to the single manufacturer that markets the carline, subject to paragraph (b) of this section.

(b)(1) The joint owners of a carline may designate, by written agreement, the manufacturer of record of that carline.

(2) The manufacturer of record is responsible for compliance with all the manufacturer requirements in this part with respect to the jointly owned carline. However, carline determinations must be consistent with § 583.4(3).

(3) A designation under this section of a manufacturer of record is effective beginning with the first model year beginning after the conclusion of the written agreement, or, if the joint owners so agree in writing, with a specified later model year.

(4) Each manufacturer of record shall send to the Administrator written notification of its designation as such not later than 30 days after the conclusion of the written agreement, and state the carline of which it is considered the manufacturer, the names of the other persons which jointly own the carline, and the name of the person, if any, formerly considered to be the manufacturer of record.

(5) The joint owners of a carline may change the manufacturer of record for a future model year by concluding a written agreement before the beginning of that model year.

(6) The allied suppliers for the jointly owned carline are the suppliers that are wholly owned by any of the manufacturers of the jointly owned carline.

§ 583.16 Maintenance of records.

(a) *General.* Each manufacturer of new passenger motor vehicles and each supplier of passenger motor vehicle equipment subject to this part shall establish, maintain, and retain in organized and indexed form, records as specified in this section. All records, including the certificates provided by suppliers, may be stored in any mode provided the mode contains all information in the records and certificates.

(b) *Manufacturers.* Each manufacturer shall maintain all records which provide a basis for the information it provides on the labels required by § 583.5, including, but not limited to, certificates from suppliers, parts lists, calculations of content, and relevant contracts with suppliers. The records shall

be maintained for five years after December 31 of the model year to which the records relate.

(c) *Suppliers*. Each supplier shall maintain all records which form a basis for the information it provides on the certificates required by §§ 583.10, 583.11, and 583.12, including, but not limited to, calculations of content, certificates from suppliers, and relevant contracts with manufacturers and suppliers. The records shall be maintained for six years after December 31 of the calendar year set forth in the date of each certificate.

§ 583.17 Reporting.

For each model year, manufacturers shall submit to the Administrator 3 copies of the information required by § 583.5(a) to be placed on a label for each carline. The information for each carline shall be submitted not later than the date the first vehicle of the carline is offered for sale to the ultimate purchaser.

PART 585—ADVANCED AIR BAG PHASE-IN REPORTING REQUIREMENTS

Sec.
585.1 Scope.
585.2 Purpose.
585.3 Applicability.
585.4 Definitions.
585.5 Reporting requirements.
585.6 Records.
585.7 Petitions to extend period to file report.

AUTHORITY: 49 U.S.C. 322, 30111, 30115, 30117, and 30166; delegation of authority at 49 CFR 1.50.

SOURCE: 65 FR 30769, May 12, 2000, unless otherwise noted.

§ 585.1 Scope.

This part establishes requirements for manufacturers of passenger cars and trucks, buses, and multipurpose passenger vehicles with a GVWR of 3,855 kg (8500 lb) or less and an unloaded vehicle weight of 2,495 kg (5500 lb) or less to submit reports, and maintain records related to the reports, concerning the number and identification of such vehicles that are certified as complying with the advanced air bag requirements of Standard No. 208, ''Occupant crash protection'' (49 CFR 571.208).

§ 585.2 Purpose.

The purpose of these reporting requirements is to aid the National Highway Traffic Safety Administration in determining whether a manufacturer has complied with the advanced air bag requirements of Standard No. 208 during the phase-ins of those requirements.

§ 585.3 Applicability.

This part applies to manufacturers of passenger cars and trucks, buses, and multipurpose passenger vehicles with a GVWR of 3,855 kg (8500 lb) or less and an unloaded vehicle weight of 2,495 kg (5500 lb) or less. However, this part does not apply to any manufacturers whose production consists exclusively of walk-in vans, vehicles designed to be sold exclusively to the U.S. Postal Service, vehicles manufactured in two or more stages, and vehicles that are altered after previously having been certified in accordance with part 567 of this chapter. In addition, this part does not apply to manufacturers whose worldwide production of motor vehicles is less than 5000 vehicles in a production year.

§ 585.4 Definitions.

(a) All terms defined in 49 U.S.C. 30102 are used in accordance with their statutory meaning.

(b) The terms *bus*, *gross vehicle weight rating or GVWR*, *multipurpose passenger vehicle*, *passenger car*, and *truck* are used as defined in section 571.3 of this chapter.

(c) For the purposes of this part, *vehicles* means passenger cars and trucks, buses, and multipurpose passenger vehicles with a GVWR of 3,855 kg (8500 lb) or less and an unloaded vehicle weight of 2,495 kg (5500 lb) or less manufactured for sale in the United States by manufacturers whose worldwide production of motor vehicles is equal to or greater than 5000 vehicles in a production year, and does not mean walk-in vans, vehicles designed to be sold exclusively to the U.S. Postal Service, vehicles manufactured in two or more stages, and vehicles that are altered after previously having

been certified in accordance with part 567 of this chapter.

(d) *Phase one of the advanced air bag requirements of Standard No. 208* refers to the requirements set forth in S14.1, S14.2, S14.5.1(a), S14.5.2, S15.1, S15.2, S17, S19, S21, S23, and S25 of Federal Motor Vehicle Safety Standard No. 208, 49 CFR 571.208.

(e) *Phase two of the advanced air bag requirements of Standard No. 208* refers to the requirements set forth in S14.3, S14.4, S14.5.1(b), S14.5.2, S15.1, S15.2, S17, S19, S21, S23, and S25 of Federal Motor Vehicle Safety Standard No. 208, 49 CFR 571.208.

(f) *Production year* means the 12-month period between September 1 of one year and August 31 of the following year, inclusive.

(g) *Limited line manufacturer* means a manufacturer that sells two or fewer carlines, as that term is defined in 49 CFR 583.4, in the United States during a production year.

§ 585.5 Reporting requirements.

(a) *Advanced credit phase-in reporting requirements.* (1) Within 60 days after the end of the production years ending August 31, 2000, August 31, 2001, August 31, 2002, and August 31, 2003, each manufacturer choosing to certify vehicles manufactured during any of those production years as complying with phase one of the advanced air bag requirements of Standard No. 208 shall submit a report to the National Highway Traffic Safety Administration as specified in this section.

(2) Within 60 days after the end of the production year ending August 31, 2007, each manufacturer choosing to certify vehicles manufactured during that production year as complying with phase two of the advanced air bag requirements of Standard No. 208 shall submit a report to the National Highway Traffic Safety Administration as specified in this section.

(3) Each report shall—

(i) Identify the manufacturer;

(ii) State the full name, title, and address of the official responsible for preparing the report;

(iii) Identify the production year being reported on;

(iv) Provide the information specified in paragraph (c) of this section;

(v) Be written in the English language; and

(vi) Be submitted to: Administrator, National Highway Traffic Safety Administration, 400 Seventh Street, SW, Washington, DC 20590.

(b) *Phase-in reporting requirements.* (1) Within 60 days after the end of the production years ending August 31, 2004, August 31, 2005, and August 31, 2006, each manufacturer shall submit a report to the National Highway Traffic Safety Administration regarding its compliance with phase one of the advanced air bag requirements of Standard No. 208 for its vehicles produced in that production year. Each report shall also specify the number of advance credit vehicles, if any, that are being applied to the production year being reported on.

(2) Within 60 days after the end of the production years ending August 31, 2008, August 31, 2009, and August 31, 2010, each manufacturer shall submit a report to the National Highway Traffic Safety Administration regarding its compliance with phase two of the advanced air bag requirements of Standard No. 208 for its vehicles produced in that production year. Each report shall also specify the number of advance credit vehicles, if any, that are being applied to the production year being reported on.

(3) Each report shall—

(i) Identify the manufacturer;

(ii) State the full name, title, and address of the official responsible for preparing the report;

(iii) For limited line manufacturers, specify whether the manufacturer has elected to comply with S14.1(a) or S14.1(b), or S14.3(a) or S14.3(b) of 49 CFR 571.208, as applicable;

(iv) Identify the production year being reported on;

(v) Contain a statement regarding whether or not the manufacturer complied with phase one of the advanced air bag requirements of Standard No. 208 or phase two of the advanced air bag requirements of Standard No. 208, as applicable to the period covered by the report, and the basis for that statement;

(vi) Provide the information specified in paragraph (d) of this section;

(vii) Be written in the English language; and

(viii) Be submitted to: Administrator, National Highway Traffic Safety Administration, 400 Seventh Street, SW, Washington, DC 20590.

(c) *Advanced credit phase-in report content*—(1) *Production of complying vehicles.* (i) With respect to the reports identified in section 585.5(a)(1), each manufacturer shall report for the production year for which the report is filed the number of vehicles, by make and model year, that meet the applicable advanced air bag requirements of Standard No. 208, and to which advanced air bag requirements the vehicles are certified.

(ii) With respect to the report identified in section 585.5(a)(2), each manufacturer shall report the number of vehicles, by make and model year, that meet the applicable advanced air bag requirements of Standard No. 208, and to which advanced air bag requirements the vehicles are certified.

(2) *Vehicles produced by more than one manufacturer.* Each manufacturer whose reporting of information is affected by one or more of the express written contracts permitted by S14.1.3.2 or S14.3.3.2 of Standard No. 208 shall:

(i) Report the existence of each contract, including the names of all parties to the contract and explain how the contract affects the report being submitted.

(ii) Report the number of vehicles covered by each contract in each production year.

(d) *Phase-in report content*—(1) *Basis for phase-in production requirements.* For production years ending August 31, 2003, August 31, 2004, August 31, 2005, August 31, 2007, August 31, 2008, and August 31, 2009, each manufacturer shall provide the number of vehicles manufactured in the current production year, or, at the manufacturer's option, for the current production year and each of the prior two production years if the manufacturer has manufactured vehicles during both of the two production years prior to the year for which the report is being submitted.

(2) *Production of complying vehicles.* Each manufacturer shall report for the production year for which the report is filed the number of vehicles, by make and model year, that meet the applicable advanced air bag requirements of Standard No. 208, and to which advanced air bag requirements the vehicles are certified.

(3) *Vehicles produced by more than one manufacturer.* Each manufacturer whose reporting of information is affected by one or more of the express written contracts permitted by S14.1.3.2 or S14.3.3.2 of Standard No. 208 shall:

(i) Report the existence of each contract, including the names of all parties to the contract and explain how the contract affects the report being submitted.

(ii) Report the number of vehicles covered by each contract in each production year.

§ 585.6 Records.

Each manufacturer shall maintain records of the Vehicle Identification Number of each vehicle for which information is reported under § 585.5(c)(1) and (d)(2) until December 31, 2011.

§ 585.7 Petitions to extend period to file report.

A petition for extension of the time to submit a report required under this part shall be received not later than 15 days before the report is due. The petition shall be submitted to: Administrator, National Highway Traffic Safety Administration, 400 Seventh Street, SW, Washington, DC 20590. The filing of a petition does not automatically extend the time for filing a report. A petition will be granted only if the petitioner shows good cause for the extension, and if the extension is consistent with the public interest.

PART 586—SIDE IMPACT PHASE-IN REPORTING REQUIREMENTS

Sec.

586.1 Scope.
586.2 Purpose.
586.3 Applicability.
586.4 Definitions.
586.5 Reporting requirements—manufacturers of passenger cars.
586.6 Records—passenger cars.
586.7 [Reserved]

586.8 Records—manufacturers of trucks, buses and multipurpose passenger vehicles.
586.9 Petition to extend period to file report.

AUTHORITY: 49 U.S.C. 322, 30111, 30115, 30117, and 30166; delegation of authority at 49 CFR 1.50.

SOURCE: 55 FR 45769, Oct. 30, 1990, unless otherwise noted.

§ 586.1 Scope.

This part establishes requirements for passenger car manufacturers to submit a report, and maintain records related to the report, concerning the number of passenger cars manufactured that meet the dynamic test procedures and performance requirements of Standard No. 214, *Side Impact Protection* (49 CFR 571.214), and it establishes requirements for manufacturers of trucks, buses and multipurpose passenger vehicles with a gross vehicle weight rating (GVWR) of 10,000 pounds or less to maintain records related to the number of such vehicles that meet the side door strength requirements of Standard No. 214.

[60 FR 57839, Nov. 22, 1995]

§ 586.2 Purpose.

The purpose of the reporting requirements is to aid the National Highway Traffic Safety Administration in determining whether a passenger car manufacturer has complied with the requirements of Standard No. 214, *Side Impact Protection* (49 CFR 571.214) concerning dynamic test procedures and performance requirements concerning side impact protection, and whether a manufacturer of multipurpose passenger vehicles, trucks and buses with a GVWR of 10,000 pounds or less has complied with the side door strength requirements of Standard No. 214.

[57 FR 30922, July 13, 1992]

§ 586.3 Applicability.

This part applies to manufacturers of passenger cars and to manufacturers of trucks, buses and multipurpose passenger vehicles with a GVWR of 10,000 pounds or less manufactured before September 1, 1994. However, this part does not apply to any manufacturers of trucks, buses and multipurpose passenger vehicles whose production consists exclusively of walk-in vans, vehicles which do not have any side doors that can be used for occupant egress, vehicles which exclusively have doors of the types specified in S3(e) of 49 CFR 571.214 or double cargo doors, doors without one or more windows, or doors for which the ratio of the width of the lowest portion of the door to the width of the door at its widest point is not greater than 0.5. (The width of the door is measured in a horizontal plane and on the outside surface of the door. The lowest portion of the door is that portion of the lower edge of the door which is lowest to the ground and which is essentially horizontal.) In addition, this section does not apply to vehicles manufactured in two or more stages, and vehicles that are altered after previously having been certified in accordance with part 567 of this chapter.

[60 FR 57839, Nov. 22, 1995]

§ 586.4 Definitions.

(a) All terms defined in section 30102 of Title 49, U.S.C., Chapter 301 are used in their statutory meaning.

(b) Bus, gross vehicle weight rating or GVWR, multipurpose passenger vehicle, passenger car, and truck are used as defined in § 571.3 of this chapter.

(c) *Production year* means the 12-month period between September 1 of one year and August 31 of the following year, inclusive.

[57 FR 30923, July 13, 1992, as amended at 60 FR 57839, Nov. 22, 1995]

§ 586.5 Reporting requirements—manufacturers of passenger cars.

(a) *General reporting requirements.* Within 60 days after the end of each of the production years ending August 31, 1994, August 31, 1995, and August 31, 1996, each manufacturer shall submit a report to the National Highway Traffic Safety Administration concerning its compliance with the requirements of S3(c) of Standard No. 214 for its passenger cars produced in that year. Each report shall—

(1) Identify the manufacturer:

(2) State the full name, title, and address of the official responsible for preparing the report;

(3) Identify the production year being reported on;

(4) Contain a statement regarding whether or not the manufacturer complied with the dynamic testing and performance requirements of the amended Standard No. 214 for the period covered by the report and the basis for that statement;

(5) Provide the information specified in § 586.5(b), except that this information need not be submitted with the report due 60 days after August 31, 1994 if the manufacturer chooses the compliance option specified in S3(d) of 49 CFR 571.214;

(6) Be written in the English language; and

(7) Be submitted to: Administrator, National Highway Traffic Safety Administration, 400 Seventh Street SW., Washington, DC 20590.

(b) *Report content*—(1) *Basis for phase-in production goals.* Each manufacturer shall provide the number of passenger cars manufactured for sale in the United States for each of the three previous production years, or, at the manufacturer's option, for the current production year. A new manufacturer that is, for the first time, manufacturing passenger cars for sale in the United States must report the number of passenger cars manufactured during the current production year.

(2) *Production.* Each manufacturer shall report for the production year being reported on, and each preceding production year, to the extent that cars produced during the preceding years are treated under Standard No. 214 as having been produced during the production year being reported on, information on the number of passenger cars that meet the dynamic test procedure and performance requirements of S5 and S6 of Standard No. 214.

(3) *Passenger cars produced by more than one manufacturer.* Each manufacturer whose reporting of information is affected by one or more of the express written contracts permitted by S8.4.2 of Standard No. 214 shall:

(i) Report the existence of each contract, including the names of all parties to the contract, and explain how the contract affects the report being submitted.

(ii) Report the actual number of passenger cars covered by each contract.

EFFECTIVE DATE NOTE: At 55 FR 45769, Oct. 30, 1990, part 586 was added. The information collection requirements in § 586.5 will not be effective until approval has been given by the Office of Management and Budget.

§ 586.6 Records—passenger cars.

Each manufacturer shall maintain records of the Vehicle Identification Number for each passenger car for which information is reported under § 586.5(b)(2) until December 31, 1998.

[55 FR 45769, Oct. 30, 1990, as amended at 56 FR 47011, Sept. 17, 1991; 57 FR 21616, May 21, 1992; 57 FR 30923, July 13, 1992]

§ 586.7 [Reserved]

§ 586.8 Records—manufacturers of trucks, buses and multipurpose passenger vehicles.

Until December 31, 1996, each manufacturer shall maintain records of the vehicle identification number for each truck, bus and multipurpose passenger vehicle with a GVWR of 10,000 pounds or less produced in the production year ending August 31, 1994, that meets the side door strength requirements (S3.1 or S3.2) of Standard No. 214.

[60 FR 57839, Nov. 22, 1995]

§ 586.9 Petition to extend period to file report.

A petition for extension of the time to submit a report must be received not later than 15 days before expiration of the time stated in § 586.5(a) or § 586.7(a). The petition must be submitted to: Administrator, National Highway Traffic Safety Administration, 400 Seventh Street, SW., Washington, DC 20590. The filing of a petition does not automatically extend the time for filing a report. A petition will be granted only if the petitioner shows good cause for the extension and if the extension is consistent with the public interest.

[57 FR 30923, July 13, 1992]

PART 587—DEFORMABLE BARRIERS

Subpart A—General

Sec.

587.1 Scope.

587.2 Purpose.
587.3 Application.

Subpart B—Side Impact Moving Deformable Barrier

587.4 Definitions.
587.5 Incorporated materials.
587.6 General description.
587.7–587.10 [Reserved]

Subpart C—Offset Deformable Barrier

587.11 [Reserved]
587.12 Incorporation by reference.
587.13 General description.
587.14 Deformable face component dimensions and material specifications.
587.15 Verification of aluminum honeycomb crush strength.
587.16 Adhesive bonding procedure.
587.17 Construction.
587.18 Dimensions of fixed rigid barrier.
587.19 Mounting.

AUTHORITY: 49 U.S.C. 322, 30111, 30115, 30117, and 30166; delegation of authority at 49 CFR 1.50.

SOURCE: 55 FR 45779, Oct. 30, 1990, unless otherwise noted.

Subpart A—General

§ 587.1 Scope.

This part describes deformable impact barriers that are to be used for testing compliance of motor vehicles with motor vehicle safety standards.

[65 FR 17198, Mar. 31, 2000]

§ 587.2 Purpose.

The design and performance criteria specified in this part are intended to describe measuring tools with sufficient precision to give repetitive and correlative results under similar test conditions and to reflect adequately the protective performance of a motor vehicle or item of motor vehicle equipment with respect to human occupants

§ 587.3 Application.

This part does not in itself impose duties or liabilities on any person. It is a description of tools that are used in compliance tests to measure the performance of occupant protection systems required by the safety standards that refer to these tools. It is designed to be referenced by, and become part of, the test procedures specified in motor vehicle safety standards such as Standard No. 208, *Occupant Crash Protection*, and Standard No. 214, *Side Impact Protection*.

[65 FR 17199, Mar. 31, 2000]

Subpart B—Side Impact Moving Deformable Barrier

§ 587.4 Definitions.

All terms defined in section 102 of the National Traffic and Motor Vehicle Safety Act (15 U.S.C. 1391) are used in their statutory meaning.

§ 587.5 Incorporated materials.

(a) The drawings and specifications referred to in this regulation that are not set forth in full are hereby incorporated in this part by reference. These materials are thereby made part of this regulation. The Director of the Federal Register has approved the materials incorporated by reference. For materials subject to change, only the specific version approved by the Director of the Federal Register and specified in the regulation are incorporated. A notice of any change will be published in the FEDERAL REGISTER. As a convenience to the reader, the materials incorporated by reference are listed in the Finding Aid Table found at the end of this volume of the Code of Federal Regulations.

(b) The drawings and specifications incorporated in this part by reference are available for examination in the general reference section of Docket 79–04, Docket Section, National Highway Traffic Safety Administration, Room 5109, 400 Seventh Street, SW., Washington, DC 20590. Copies may be obtained from Rowley-Scher Reprographics, Inc., 1111 14th Street, NW., Washington, DC 20005, telephone (202) 628–6667 or (202) 408–8789. The drawings and specifications are also on file in the reference library of the Office of the Federal Register, National Archives and Records Administration, Washington, DC.

§ 587.6 General description.

(a) The moving deformable barrier consists of component parts and component assemblies which are described in drawings and specifications that are

set forth in this § 587.6 of this chapter (incorporated by reference; see § 587.5).

(b) The moving deformable barrier specifications are provided in the drawings shown in DSL–1278 through DSL–1287, except DSL–1282, and the drawing shown in DSL–1290 (DSL–1278 through DSL–1287, except for DSL–1282, and DSL–1290 are incorporated by reference; see § 587.5).

(1) The specifications for the final assembly of the moving deformable barrier are provided in the drawings shown in DSL–1278, dated October 1991.

(2) The specifications for the frame assembly of the moving deformable barrier are provided in the drawings shown in DSL–1281, dated August 20, 1980.

(3) The specifications for the face of the moving deformable barrier are provided in the drawings shown in DSL–1285, dated October 1991, and DSL–1286, dated August 20, 1980.

(4) The specifications for the ballast installation and details concerning the ballast plate are provided in drawings shown in DSL–1279 and DSL–1280, both dated August 20, 1980.

(5) The specifications for the hub assembly and details concerning the brake are provided in drawings shown in DSL–1283, dated October 1991.

(6) The specifications for the rear guide assembly are provided in drawings shown in DSL–1284, dated August 20, 1980.

(7) The specifications for the research axle assembly are provided in drawings shown in DSL–1287, dated October 1991.

(8) The specifications for the compliance axle assembly are provided in drawings shown in DSL–1290, dated October 1991.

(c) In configuration 2 (with two cameras and camera mounts, a light trap vane, and ballast reduced), the moving deformable barrier (crabbable axle), including the impact surface, supporting structure, and carriage, weighs 3,015 pounds, has a track width of 74 inches, and has a wheelbase of 102 inches.

(d) In configuration 2, the moving deformable barrier has the following center of gravity:

X=44.2 inches rear of front axle
Y=0.3 inches left of longitudinal center line
Z=19.7 inches from ground.

(e) The moving deformable barrier has the following moment of inertia:

Pitch=1669 ft-lb-sec^2
Roll=375 ft-lb-sec^2
Yaw=1897 ft-lb-sec^2

[55 FR 45779, Oct. 30, 1990; 56 FR 47011, Sept. 17, 1991, as amended at 57 FR 7558, Mar. 3, 1992]

§§ 587.7–587.10 [Reserved]

Subpart C—Offset Deformable Barrier

SOURCE: 65 FR 17199, Mar. 31, 2000, unless otherwise noted.

§ 587.11 [Reserved]

§ 587.12 Incorporation by reference.

Society of Automotive Engineers (SAE) Recommended Practice J211/1 Rev. MAR 95, Instrumentation for Impact Tests-Part 1—Electronic Instrumentation, is incorporated by reference in § 587.15 in accordance with 5 U.S.C. 552(a) and 1 CFR part 51. A copy may be obtained from SAE at Society of Automotive Engineers, Inc., 400 Commonwealth Drive, Warrendale, PA 15096. A copy of the material may be inspected at NHTSA's Docket Section, 400 Seventh Street, S.W., room 5109, Washington, DC, or at the Office of Federal Register, 800 North Capitol Street, N.W., Suite 700, Washington, DC.

§ 587.13 General description.

The offset deformable barrier is comprised of two elements: a fixed rigid barrier and a deformable face (Figure 1). The fixed rigid barrier is adequate to not deflect or displace more than 10 mm during the vehicle impact. The deformable face consists of aluminum honeycomb and aluminum covering.

§ 587.14 Deformable face component dimensions and material specifications.

The dimensions of the deformable face are illustrated in Figure 1 of this subpart. The dimensions and materials of the individual components are listed separately below. All dimensions allow a tolerance of ± 2.5 mm (0.1 in) unless otherwise specified.

(a) Main honeycomb block.

(1) *Dimensions.* The main honeycomb block has a height of 650 mm (25.6 in) (in the direction of honeycomb ribbon axis), a width of 1,000 mm (39.4 in), and a depth of 450 mm (17.7 in)(in the direction of honeycomb cell axis).

(2) *Material.* The main honeycomb block is constructed of the following material. The honeycomb is manufactured out of aluminum 3003, with a foil thickness of 0.076 mm (0.003 in) ± 0.004 mm (0.002 in) a cell size of 19.14 mm (0.75 in), a density of 28.6 kg/m^3 (1.78 lb/ft^3) ± 2kg/m^3 (0.25 1b/ft^3), and a crush strength of 0.342 MPa (49.6 psi) + 0% − 10%, measured in accordance with the certification procedure described in § 587.15.

(b) Bumper element honeycomb.

(1) *Dimensions.* The bumper element honeycomb has a height of 330 mm (13 in)(in the direction of honeycomb ribbon axis), a width of 1,000 mm (39.4 in), and a depth of 90 mm (3.5 in) (in the direction of honeycomb cell axis).

(2) *Material.* The bumper element honeycomb is constructed of the following material. The honeycomb is manufactured out of aluminum 3003, with a foil thickness of 0.076 mm (0.003 in) ± 0.004 mm (0.0002 in), a cell size of 6.4 mm (0.25 in) ± 1 mm (0.040 in), a density of 82.6 kg/m^3 (5.15 lb/ft^3) ± 3 kg/m^3 (0.19 lb/ft^3), and a crush strength of 1.711 MPa (248 psi) + 0% −10%, measured in accordance with the certification procedure described in § 587.14.

(c) Backing sheet.

(1) *Dimensions.* The backing sheet has a height of 800 mm (31.5 in), a width of 1,000 mm (39.4 in), and a thickness of 2.0 mm (0.08 in) ± 0.1 mm (0.004 in).

(2) *Material.* The backing sheet is manufactured out of aluminum 5251/5052.

(d) Cladding sheet.

(1) *Dimensions.* The cladding sheet of the main honeycomb block has a total length of 1,700 mm (66.9 in), a width of 1,000 mm (39.4 in), and a thickness of 0.81 mm (0.03 in) ± 0.07 mm (0.003 in). It is shaped as indicated in Figure 1.

(2) *Material.* The cladding sheet of the main honeycomb block is manufactured out of aluminum 5251/5052.

(e) Bumper element honeycomb facing sheet.

(1) *Dimensions.* The bumper facing sheet has a height of 330 mm (13 in), a width of 1,000 mm (39.4 in), and a thickness of 0.81 mm (0.03 in) ± 0.07 mm (0.003 in).

(2) *Material.* The bumper element honeycomb facing sheet is manufactured out of aluminum 5251/5052.

(f) Adhesive. The adhesive used throughout is a two-part polyurethane. (such as Ciba-Geigy XB5090/1 resin with XB5304 hardener, or equivalent).

§ 587.15 Verification of aluminum honeycomb crush strength.

The following procedure is used to ascertain the crush strength of the main honeycomb block and the bumper element honeycomb, as specified in §§ 587.14(a)(2) and 587.14(b)(2).

(a) *Sample locations.* To ensure uniformity of crush strength across the whole of the deformable face, 8 samples are taken from 4 locations evenly spaced across the honeycomb material. Seven of these 8 samples must meet the crush strength requirements when tested in accordance with the following sections. The location of the samples depends on the size of the honeycomb material being tested. Four samples, each measuring 300 mm (11.8 in) × 300 mm (11.8 in) × 25 mm (1 in) thick are cut from the honeycomb material. (See Figure 2 for how to locate these samples on two different sizes of honeycomb material.) Each of these larger samples is cut into samples of the size specified in § 587.15(b). Verification is based on the testing of two samples from each of the four locations. The other two samples are retained for future verification, if necessary.

(b) *Sample size.* Samples of the following size are used for testing. The length is 150 mm (5.9 in) ± 6 mm (0.24 in), the width is 150 mm (5.9 in) ± 6 mm (0.24 in), and the thickness is 25 mm (1 in) ± 2 mm (0.08 in). The walls of incomplete cells around the edge of the sample are trimmed as follows (See Figure 3). In the width (''W'') direction, the fringes (''f'') are no greater than 1.8 mm (0.07 in); in the length (''L'') direction, the fringes (''e'') are at least half the length of one bonded cell wall (''d'') (in the ribbon direction).

(c) *Area measurement.* The length of the sample is measured in three locations, 12.7 mm (0.5 in) from each end and in the middle, and recorded as L1,

L2, and L3 (Figure 3). In the same manner, the width is measured and recorded as W1, W2, and W3 (Figure 3). These measurements are taken on the centerline of the thickness. The crush area is then calculated as:

$$A = \frac{(L1+L2+L3)}{3} X \frac{(W1+W2+W3)}{3}$$

(d) *Crush rate and distance.* The sample is crushed at a rate of not less than 5.1 mm/min (0.2 in/ min) and not more than 7.6 mm/min (0.29 in/min). The minimum crush distance is 16.5 mm (0.65 in). Force versus deflection data are collected in either analog or digital form for each sample tested. If analog data are collected, a means of converting the data to digital data must be made available. All digital data are collected at a rate consistent with SAE Recommended Practice J211/1 Rev. MAR 95 (see § 587.12).

(e) *Crush strength determination.* Ignore all data prior to 6.4 mm (0.25 in) of crush and after 16.5 mm (0.65 in) of crush. Divide the remaining data into three sections or displacement intervals (n = 1, 2, 3) (see Figure 4) as follows. Interval one is from 6.4–9.7 mm (0.25–0.38 in) deflection, inclusive. Interval two is from 9.7–13.2 mm (0.38–0.52 in) deflection, exclusive. Interval three is from 13.2–16.5 mm (0.52–0.65 in) deflection, inclusive. Find the average for each section as follows:

$$F(n) = \frac{[F(n)1+...+F(n)m]}{m}; n = 1,2,3$$

where m represents the number of data points measured in each of the three intervals. Calculate the crush strength of each section as follows:

$$S(n) = \frac{F(n)}{A}; n = 1,2,3$$

(f) *Sample crush strength specification.* For a honeycomb sample to meet crush strength requirements, the following condition must be met. For the 0.342 MPa (49.6 psi) material, the strength must be equal to or greater than 0.308 MPa (45 psi) but less than or equal to 0.342 MPa (49.6 psi) for all three compression intervals. For the 1.711 MPa (248 psi) material the strength must be equal to or greater than 1.540 MPa (223 psi) but less than or equal to 1.711 MPa (248 psi) for all three compression intervals.

(g) *Testing hardware.* (1) The hardware used to verify crush strength is capable of applying a load of 13.3 kN (3,000 lb), over at least a 16.5 mm (0.65 in) stroke. The crush rate is constant and known. To ensure that the load is applied to the entire sample, the top and bottom crush plates are no smaller than 165 mm by 165 mm (6.5 in × 6.5 in). The engaging surfaces of the crush plates have a roughness approximately equivalent to 60 grit sandpaper. The bottom crush plate is marked to ensure that the applied load is centered on the sample.

(2) The crush plate assemblies have an average angular rigidity (about axes normal to the direction of crush) of at least 1017 Nm/deg (750 ft-lb/deg), over the range of 0 to 203 Nm (0 to 150 ft-lb) applied torque.

§ 587.16 Adhesive bonding procedure.

Immediately before bonding, aluminum sheet surfaces to be bonded are thoroughly cleaned using a suitable solvent, such as 1-1-1 Trichloroethane. This is carried out at least twice and more often if required to eliminate grease or dirt deposits. The cleaned surfaces are abraded using 120 grit abrasive paper. Metallic/silicon carbide abrasive paper is not to be used. The surfaces are thoroughly abraded and the abrasive paper changed regularly during the process to avoid clogging, which could lead to a polishing effect. Following abrading, the surfaces are thoroughly cleaned again, as above. In total, the surfaces are solvent-cleaned at least four times. All dust and deposits left as a result of the abrading process are removed, as these can adversely affect bonding. The adhesive is applied to one surface only, using a ribbed rubber roller. In cases where honeycomb is to be bonded to aluminum sheet, the adhesive is applied to the aluminum sheet only. A maximum pressure of 0.5 kg/m^2 (11.9 lb/ft^2) is applied evenly over the surface, giving a maximum film thickness of 0.5 mm (0.02 in).

§ 587.17 Construction.

(a) The main honeycomb block is bonded to the backing sheet with adhesive such that the cell axes are perpendicular to the sheet. The cladding sheet is adhesively bonded to the front surface of the main honeycomb block. The top and bottom surfaces of the cladding sheet are not bonded to the main honeycomb block but are positioned close to it. The cladding sheet is adhesively bonded to the backing sheet at the mounting flanges. The bumper element honeycomb is adhesively bonded to the front of the cladding sheet such that the cell axes are perpendicular to the sheet. The bottom of the bumper element honeycomb is flush with the bottom surface of the cladding sheet. The bumper facing sheet is adhesively bonded to the front of the bumper element honeycomb.

(b) The bumper element honeycomb is divided into three equal sections by means of two horizontal slots. These slots are cut through the entire depth of the bumper element and extend the whole width of the bumper. The slots are cut using a saw; their width is the width of the blade used which do not exceed 4.0 mm (0.16 in).

(c) Clearance holes for mounting the deformable face are drilled in the cladding sheet mounting flanges (shown in Figure 5). The holes are 20 mm (0.79 in) in diameter. Five holes are drilled in the top flange at a distance of 40 mm (1.57 in) from the top edge of the flange and five holes in the bottom flange at a distance of 40 mm (1.6 in) from the bottom edge of the flange. The holes are spaced at 100 mm (3.9 in), 300 mm (11.8 in), 500 mm (19.7 in), 700 mm (27.5 in), 900 mm (35.4 in) horizontally, from either edge of the barrier. All holes are drilled within ±1 mm (0.04 in) of the nominal distances.

§ 587.18 Dimensions of fixed rigid barrier.

(a) The fixed rigid barrier has a mass of not less than 7×10^4 kg (154,324 lb).

(b) The height of the fixed rigid barrier is at least as high as the highest point on the vehicle at the intersection of the vertical transverse plane tangent to the forwardmost point of both front tires, when the tires are parallel to the longitudinal centerline of the vehicle, and the vertical plane through the longitudinal centerline of the vehicle.

§ 587.19 Mounting.

(a) The deformable face is rigidly attached to the edge of the fixed rigid barrier or to some rigid structure attached thereto. The front of the fixed rigid barrier to which the deformable face is attached is flat (continuous over the height and width of the face and vertical ±1 degree and perpendicular ±1 degree to the axis of the run-up track). The edge of the deformable face is aligned with the edge of the fixed rigid barrier appropriate for the side of the vehicle to be tested.

(b) The deformable face is attached to the fixed rigid barrier by means of ten bolts, five in the top mounting flange and five in the bottom, such that the bottom of the bumper element honeycomb is 200 mm (7.8 in) ±15 mm (0.6 in) from the ground. These bolts are at least 8 mm (0.3 in) in diameter. Steel clamping strips are used for both the top and bottom mounting flanges (Figure 1). These strips are 60 mm (2.4 in) high and 1000 mm (39.4 in) wide and have thickness of at least 3 mm (0.12 in). Five clearance holes of 20 mm (0.8 in) diameter are drilled in both strips to correspond with those in the mounting flange on the deformable face cladding sheet (see § 586.17(c)).

FIGURES TO SUBPART C OF 49 CFR PART 587

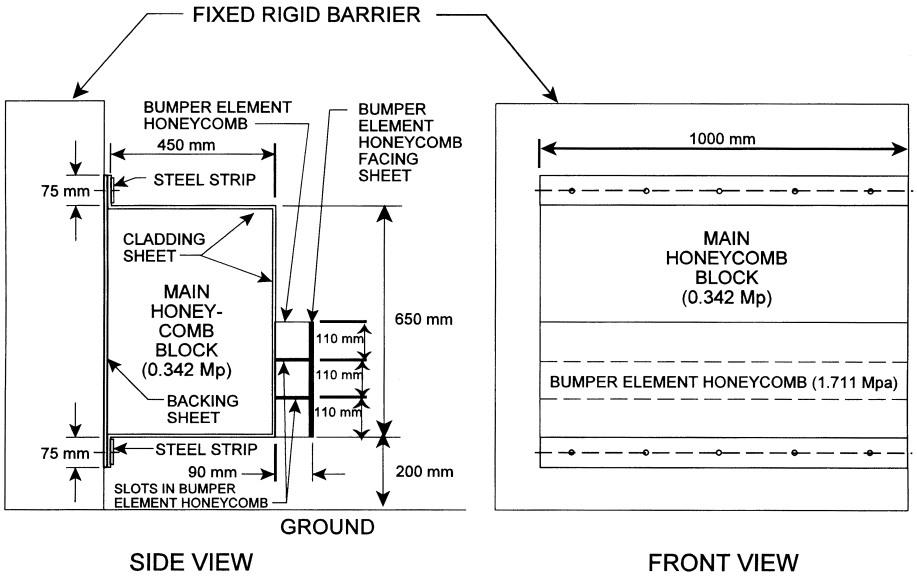

FIGURE 1
OFFSET BARRIER

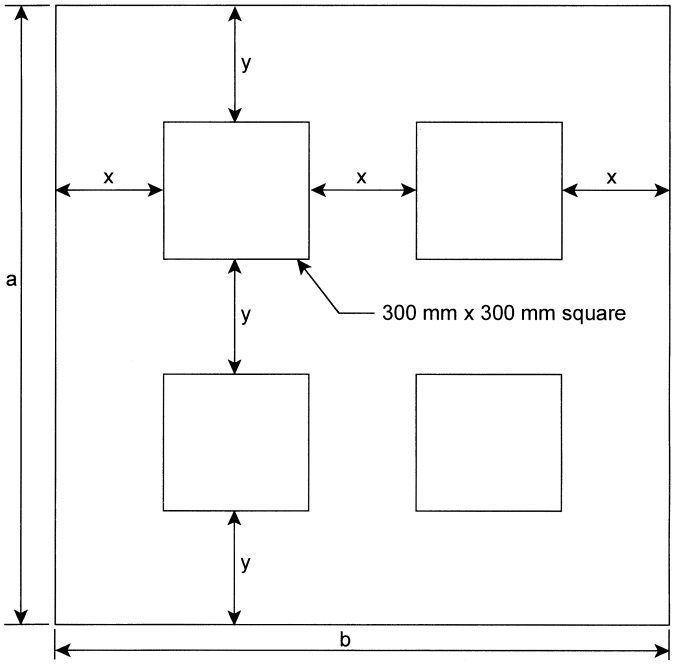

If a ≥ 900 mm: x = 1/3 (b - 600) mm and y = 1/3 (a - 600) mm (for a < b)

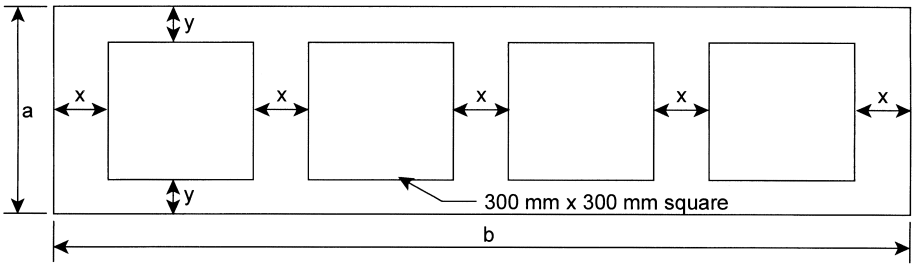

If a < 900 mm: x = 1/5 (b - 1200) mm and y = 1/2 (a - 300) mm (for a ≤ b)

FIGURE 2

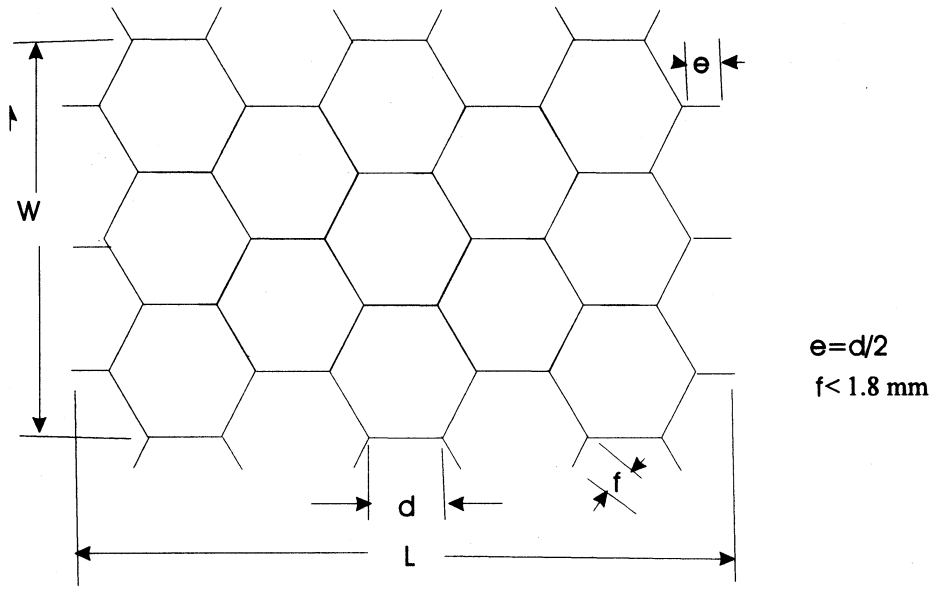

Figure 3
Honeycomb Axes and Measured Dimensions

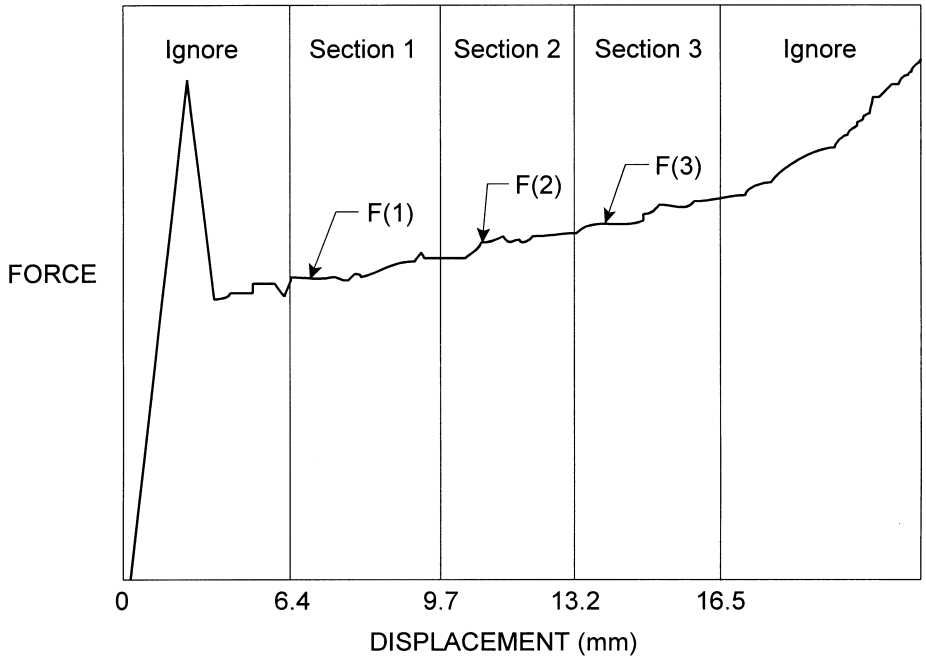

FIGURE 4
CRUSH FORCE AND DISPLACEMENT

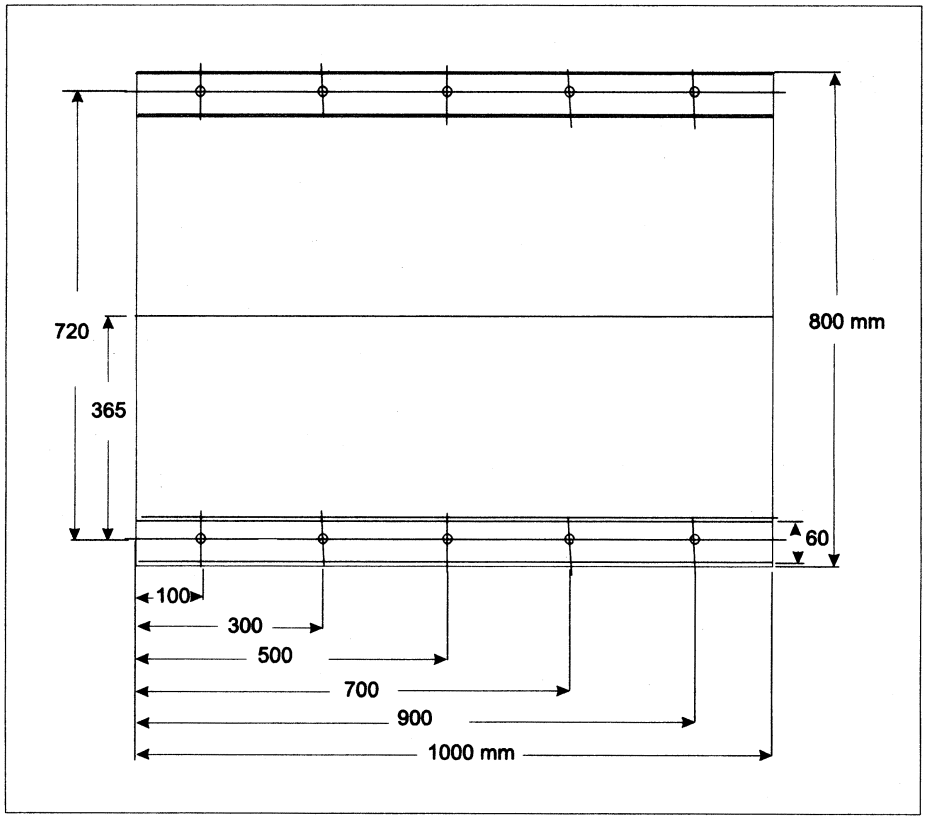

Figure 5
Positions of Holes for Deformable Face Mounting

PART 588—CHILD RESTRAINT SYSTEMS RECORDKEEPING REQUIREMENTS

Secs.
588.1 Scope.
588.2 Purpose.
588.3 Applicability.
588.4 Definitions.
588.5 Records.
588.6 Record retention.

AUTHORITY: 15 U.S.C. 1392, 1401, 1407; delegation of authority at 49 CFR 1.50.

SOURCE: 57 FR 41438, Sept. 10, 1992, unless otherwise noted.

§588.1 Scope.

This part establishes requirements for manufacturers of child restraint systems to maintain lists of the names and addresses of child restraint owners.

§588.2 Purpose.

The purpose of this part is to aid manufacturers in contacting the owners of child restraints during notification campaigns conducted in accordance with 49 CFR part 577, and to aid the National Highway Traffic Safety Administration in determining whether a manufacturer has met its recall responsibilities.

§588.3 Applicability.

This part applies to manufacturers of child restraint systems, except factory-installed built-in restraints.

§ 588.4 Definitions.

(a) *Statutory definitions.* All terms defined in section 102 of the National Traffic and Motor Vehicle Safety Act (15 U.S.C. 1391) are used in their statutory meaning.

(b) *Motor Vehicle Safety Standard definitions.* Unless otherwise indicated, all terms used in this part that are defined in the Motor Vehicle Safety Standards, part 571 of this subchapter (hereinafter ''the Standards''), are used as defined in the Standards.

(c) *Definitions used in this part.*

Child restraint system is used as defined in S4 of 49 CFR 571.213, *Child Restraint Systems.*

Factory-installed built-in child restraint system is used as defined in S4 of 49 CFR 571.213.

Owners include purchasers.

Registration form means the form provided with a child restraint system in compliance with the requirements of 49 CFR 571.213, and any communication from an owner of a child restraint to the manufacturer that provides the restraint's model name or number and the owner's name and mailing address.

§ 588.5 Records.

Each manufacturer, or manufacturer's designee, shall record and maintain records of the owners of child restraint systems who have submitted a registration form. The record shall be in a form suitable for inspection such as computer information storage devices or card files, and shall include the names and mailing addresses of the owners, and the model name or number and date of manufacture (month, year) of the owners' child restraint systems.

§ 588.6 Record retention.

Each manufacturer, or manufacturer's designee, shall maintain the information specified in § 588.5 of this part for a registered restraint system for a period of not less than six years from the date of manufacture of that restraint system.

PART 589—UPPER INTERIOR COMPONENT HEAD IMPACT PROTECTION PHASE-IN REPORTING REQUIREMENTS

Sec.
589.1 Scope.
589.2 Purpose.
589.3 Applicability.
589.4 Definitions.
589.5 Response to inquiries.
589.6 Reporting requirements.
589.7 Records.
589.8 Petition to extend period to file report.

AUTHORITY: 49 U.S.C. 322, 30111, 30115, 30117, and 30166; delegation of authority at 49 CFR 1.50.

SOURCE: 60 FR 43061, Aug. 18, 1995, unless otherwise noted.

§ 589.1 Scope.

This part establishes requirements for manufacturers of passenger cars and trucks and multipurpose passenger vehicles with a gross vehicle weight rating of 4,536 kilograms or less and buses with a gross vehicle weight rating of 3,860 kilograms or less to respond to NHTSA inquiries, to submit a report, and maintain records related to the report, concerning the number of such vehicles that meet the upper interior component head impact protection requirements of Standard No. 201, *Occupant protection in interior impact* (49 CFR 571.201).

[62 FR 16735, Apr. 8, 1997]

§ 589.2 Purpose.

This purpose of these reporting requirements is to aid the National Highway Traffic Safety Administration in determining whether a manufacturer of passenger cars and trucks and multipurpose passenger vehicles with a gross vehicle weight rating of 4,536 kilograms or less and buses with a gross vehicle weight rating of 3,860 kilograms or less has complied with the upper interior component head impact protection requirements of Standard No. 201.

[62 FR 16735, Apr. 8, 1997]

§589.3 Applicability.

This part applies to manufacturers of passenger cars and trucks and multipurpose passenger vehicles with a gross vehicle weight rating of 4,536 kilograms or less and buses with a gross vehicle weight rating of 3,860 kilograms or less. However, this part does not apply to any manufacturers whose production consists exclusively of walk-in vans, vehicles manufactured in two or more stages, and vehicles that are altered after previously having been certified in accordance with part 567 of this chapter.

[62 FR 16735, Apr. 8, 1997]

§589.4 Definitions.

(a) All terms defined in 49 U.S.C. 30102 are used in their statutory meaning.

(b) Bus, gross vehicle weight rating or GVWR, multipurpose passenger vehicle, passenger car, and truck are used as defined in §571.3 of this chapter.

(c) *Production year* means the 12-month period between September 1 of one year and August 31 of the following year, inclusive.

§589.5 Response to inquiries.

During the production years ending August 31, 1999, August 31, 2000, August 31, 2001, and August 31, 2002, each manufacturer shall, upon request from the Office of Vehicle Safety Compliance, provide information regarding which vehicle make/models are certified as complying with the requirements of S6 of Standard No. 201.

[62 FR 16735, Apr. 8, 1997]

§589.6 Reporting requirements.

(a) *Phase-in selection reporting requirement.* Within 60 days after the end of the production year ending August 31, 1999, each manufacturer choosing to comply with one of the phase-in schedules permitted by S6.1 of 49 CFR 571.201 shall submit a report to the National Highway Traffic Safety Administration stating which phase-in schedule it will comply with until September 1, 2002. Each report shall—

(1) Identify the manufacturer;

(2) State the full name, title, and address of the official responsible for preparing the report;

(3) Identify the section number for the phase-in schedule selected;

(4) Be written in the English language; and

(5) Be submitted to: Administrator, National Highway Traffic Safety Administration, 400 Seventh Street, SW, Washington, DC 20590.

(b) *General reporting requirements.* Within 60 days after the end of the production years ending August 31, 1999, August 31, 2000, August 31, 2001, and August 31, 2002, each manufacturer shall submit a report to the National Highway Traffic Safety Administration concerning its compliance with the upper interior component head impact protection requirements of Standard No. 201 for its passenger cars, trucks, buses and multipurpose passenger vehicles produced in that year. Each report shall—

(1) Identify the manufacturer;

(2) State the full name, title, and address of the official responsible for preparing the report;

(3) Identify the production year being reported on;

(4) Contain a statement regarding whether or not the manufacturer complied with the upper interior component head impact protection requirements of the amended Standard No. 201 for the period covered by the report and the basis for that statement;

(5) Provide the information specified in §589.6(c);

(6) Be written in the English language; and

(7) Be submitted to: Administrator, National Highway Traffic Safety Administration, 400 Seventh Street, SW, Washington, DC 20590.

(c) *Report content*—(1) *Basis for phase-in production goals.* Each manufacturer shall provide the number of passenger cars and trucks and multipurpose passenger vehicles with a GVWR of 4,536 kilograms or less and buses with a GVWR of 3,860 kilograms or less manufactured for sale in the United States for each of the three previous production years, or, at the manufacturer's option, for the current production year. A new manufacturer that has not previously manufactured passenger cars and trucks and multipurpose passenger vehicles with a GVWR of 4,536 kilograms or less and buses with a

GVWR of 3,860 kilograms or less for sale in the United States must report the number of such vehicles manufactured during the current production year. However, manufacturers are not required to report any information with respect to those vehicles that are walk-in van type vehicles, vehicles manufactured in two or more stages, and/or vehicles that are altered after previously having been certified in accordance with part 567 of this chapter.

(2) *Production*. Each manufacturer shall report for the production year for which the report is filed the number of passenger cars and multipurpose passenger vehicles and trucks with a GVWR of 4,536 kilograms or less and buses with a GVWR of 3,860 kilograms or less that meet the upper interior component head impact protection requirements (S6) of Standard No. 201.

(3) *Vehicles produced by more than one manufacturer*. Each manufacturer whose reporting of information is affected by one or more of the express written contracts permitted by S6.1.6.2 of Standard No. 201 shall:

(i) Report the existence of each contract, including the names of all parties to the contract, and explain how the contract affects the report being submitted.

(ii) Report the actual number of vehicles covered by each contract.

[62 FR 16735, Apr. 8, 1997]

§ 589.7 Records.

Each manufacturer shall maintain records of the Vehicle Identification Number for each passenger car, multipurpose passenger vehicle, truck and bus for which information is reported under § 589.6(c)(2) until December 31, 2003.

[62 FR 16735, Apr. 8, 1997]

§ 589.8 Petition to extend period to file report.

A petition for extension of the time to submit a report must be received not later than 15 days before expiration of the time stated in § 589.6(b). The petition must be submitted to: Administrator, National Highway Traffic Safety Administration, 400 Seventh Street, SW, Washington, DC 20590. The filing of a petition does not automatically extend the time for filing a report. A petition will be granted only if the petitioner shows good cause for the extension, and if the extension is consistent with the public interest.

[62 FR 16735, Apr. 8, 1997]

PART 590—TIRE PRESSURE MONITORING SYSTEM PHASE-IN REPORTING REQUIREMENTS

Sec.

590.1 Scope.
590.2 Purpose.
590.3 Applicability.
590.4 Definitions.
590.5 Response to inquiries.
590.6 Reporting requirements.
590.7 Records.
590.8 Petition to extend period to file report.

AUTHORITY: 49 U.S.C. 322, 30111, 30115, 30117, and 30166; delegation of authority at 49 CFR 1.50.

SOURCE: 67 FR 38748, June 5, 2002, unless otherwise noted.

§ 590.1 Scope.

This part establishes requirements for manufacturers of passenger cars, multipurpose passenger vehicles, trucks, and buses with a gross vehicle weight rating of 4,536 kilograms (10,000 pounds) or less, except those vehicles with dual wheels on an axle, to submit a report, and maintain records related to the report, concerning the number of such vehicles that meet the requirements of Standard No. 138, *Tire pressure monitoring systems* (49 CFR 571.138).

§ 590.2 Purpose.

The purpose of these reporting requirements is to assist the National Highway Traffic Safety Administration in determining whether a manufacturer has complied with Standard No. 138 (49 CFR 571.138).

§ 590.3 Applicability.

This part applies to manufacturers of passenger cars, multipurpose passenger vehicles, trucks, and buses with a gross vehicle weight rating of 4,536 kilograms (10,000 pounds) or less, except those vehicles with dual wheels on an axle.

§ 590.4 Definitions.

(a) All terms defined in 49 U.S.C. 30102 are used in their statutory meaning.

(b) *Bus, gross vehicle weight rating, multipurpose passenger vehicle, passenger car, and trucks* are used as defined in 49 CFR 571.3.

(c) *Production year* means the 12-month period between November 1 of one year and October 31 of the following year, inclusive.

§ 590.5 Response to inquiries.

At any time during the production years ending October 31, 2004, October 31, 2005, and October 31, 2006, each manufacturer must, upon request from the Office of Vehicle Safety Compliance, provide information identifying the vehicles (by make, model, and vehicle identification number) that have been certified as complying with Standard No. 138. The manufacturer's designation of a vehicle as a certified vehicle is irrevocable.

§ 590.6 Reporting requirements.

(a) *General reporting requirements.* Within 60 days after the end of the production years ending October 31, 2004, October 31, 2005, and October 31, 2006, each manufacturer must submit a report to the National Highway Traffic Safety Administration concerning its compliance with Standard No. 138 (49 CFR 571.138) for its passenger cars, multipurpose passenger vehicles, trucks, and buses with a gross vehicle weight rating of less than 4,536 kilograms (10,000 pounds) produced in that year. Each report must—

(1) Identify the manufacturer;

(2) State the full name, title, and address of the official responsible for preparing the report;

(3) Identify the production year being reported on;

(4) Contain a statement regarding whether or not the manufacturer complied with the requirements of Standard No. 138 (49 CFR 571.138) for the period covered by the report and the basis for that statement;

(5) Provide the information specified in paragraph (b) of this section;

(6) Be written in the English language; and

(7) Be submitted to: Administrator, National Highway Traffic Safety Administration, 400 Seventh Street, SW., Washington, DC 20590.

(b) *Report content*—(1) *Basis for statement of compliance.* Each manufacturer must provide the number of passenger cars, multipurpose passenger vehicles, trucks, and buses with a gross vehicle weight rating of 4,536 kilograms (10,000 pounds) or less, except those vehicles with dual wheels on an axle, manufactured for sale in the United States for each of the three previous production years, or, at the manufacturer's option, for the current production year. A new manufacturer that has not previously manufactured these vehicles for sale in the United States must report the number of such vehicles manufactured during the current production year.

(2) *Production.* Each manufacturer must report for the production year for which the report is filed: the number of passenger cars, multipurpose passenger vehicles, trucks, and buses with a gross vehicle weight rating of 4,536 kilograms (10,000 pounds) or less that meet Standard No. 138 (49 CFR 571.138).

(3) *Vehicles produced by more than one manufacturer.* Each manufacturer whose reporting of information is affected by one or more of the express written contracts permitted by S7.5(c)(3) of Standard No. 138 (49 CFR 571.138) must:

(i) Report the existence of each contract, including the names of all parties to the contract, and explain how the contract affects the report being submitted.

(ii) Report the actual number of vehicles covered by each contract.

§ 590.7 Records.

Each manufacturer must maintain records of the Vehicle Identification Number for each vehicle for which information is reported under § 590.6(b)(2) until December 31, 2008.

§ 590.8 Petition to extend period to file report.

A manufacturer may petition for extension of time to submit a report under this Part. A petition will be granted only if the petitioner shows good cause for the extension and if the extension is consistent with the public

interest. The petition must be received not later than 15 days before expiration of the time stated in § 590.6(a). The filing of a petition does not automatically extend the time for filing a report. The petition must be submitted to: Administrator, National Highway Traffic Safety Administration, 400 Seventh Street, SW., Washington, DC 20590.

PART 591—IMPORTATION OF VEHICLES AND EQUIPMENT SUBJECT TO FEDERAL SAFETY, BUMPER AND THEFT PREVENTION STANDARDS

Sec.

591.1 Scope.
591.2 Purpose.
591.3 Applicability.
591.4 Definitions.
591.5 Declarations required for importation.
591.6 Documents accompanying declarations.
591.7 Restrictions on importations.
591.8 Conformance bond and conditions.
591.9 Petitions for remission or mitigation of forfeiture.
591.10 Offer of cash deposits or obligations of the United States in lieu of sureties on bonds.
APPENDIX A TO PART 591—SECTION 591.5(f) BOND FOR THE ENTRY OF A SINGLE VEHICLE
APPENDIX B TO PART 591—SECTION 591.5(f) BOND FOR THE ENTRY OF MORE THAN A SINGLE VEHICLE
APPENDIX C TO PART 591—POWER OF ATTORNEY AND AGREEMENT

AUTHORITY: 49 U.S.C. 322(a), 30114; Pub. L. 100–562, 102 Stat. 2824; Pub. L. 105–178, 112 Stat. 469; delegations of authority at 49 CFR 1.50 and 501.8.

SOURCE: 54 FR 40078, Sept. 29, 1989, unless otherwise noted.

§ 591.1 Scope.

This part establishes procedures governing the importation of motor vehicles and motor vehicle equipment subject to the Federal motor vehicle safety, bumper, and theft prevention standards.

[55 FR 11378, Mar. 28, 1990]

§ 591.2 Purpose.

The purpose of this part is to ensure that motor vehicles and motor vehicle equipment permanently imported into the United States conform with theft prevention standards issued under part 541 of this chapter and that they conform with, or are brought into conformity with, all applicable Federal motor vehicle safety standards issued under part 571 of this chapter and bumper standards issued under part 581 of this chapter. The purpose of this part is also to ensure that nonconforming vehicles and equipment items imported on a temporary basis are ultimately either exported or abandoned to the United States.

[55 FR 11378, Mar. 28, 1990]

§ 591.3 Applicability.

This part applies to any person offering a motor vehicle or item of motor vehicle equipment for importation into the United States.

[55 FR 11378, Mar. 28, 1990]

§ 591.4 Definitions.

All terms used in this part that are defined in 49 U.S.C. 30102, 32101, 32301, 32502, and 33101 are used as defined in those sections except that the term ''model year'' is used as defined in part 593 of this chapter.

Administrator means the Administrator of NHTSA.

NHTSA means the National Highway Traffic Safety Administration of the Department of Transportation.

Dutiable value means entered value, as determined by the Secretary of the Treasury.

Original manufacturer means the entity responsible for the original manufacture or assembly of a motor vehicle, and does not include any person (other than such entity) who converts the motor vehicle after its manufacture to conformance with the Federal motor vehicle safety standards.

[54 FR 40078, Sept. 29, 1989, as amended at 55 FR 3747, Feb. 5, 1990; 55 FR 11378, Mar. 28, 1990; 59 FR 52097, Oct. 14, 1994; 60 FR 57954, Nov. 24, 1995]

§ 591.5 Declarations required for importation.

No person shall import a motor vehicle or item of motor vehicle equipment into the United States unless, at the time it is offered for importation, its

importer files a declaration, in duplicate, which declares one of the following:

(a)(1) The vehicle was not manufactured primarily for use on the public roads and thus is not a motor vehicle subject to the Federal motor vehicle safety, bumper, and theft prevention standards; or

(2) The equipment item is not a system, part, or component of a motor vehicle and thus is not an item of motor vehicle equipment subject to the Federal motor vehicle safety, bumper, and theft prevention standards.

(b) The vehicle or equipment item conforms with all applicable safety standards (or the vehicle does not conform solely because readily attachable equipment items which will be attached to it before it is offered for sale to the first purchases for purposes other than resale are not attached), and bumper and theft prevention standards, and bears a certification label or tag to that effect permanently affixed by the original manufacturer to the vehicle, or by the manufacturer to the equipment item or its delivery container, in accordance with, as applicable, parts 541, 555, 567, 568, and 581, or 571 (for certain equipment items) of this chapter.

(c) The vehicle or equipment item does not comply with all applicable Federal motor vehicle safety, bumper, and theft prevention standards, but is intended solely for export, and the vehicle or equipment item, and the outside of the container of the equipment item, if any, bears a label or tag to that effect.

(d) The vehicle does not conform with all applicable Federal motor vehicle safety, bumper, and theft prevention standards, but the importer is eligible to import it because:

(1) (S)he is a nonresident of the United States and the vehicle is registered in a country other than the United States,

(2) (S)he is temporarily importing the vehicle for personal use for a period not to exceed one year, and will not sell it during that time,

(3) (S)he will export it not later than the end of one year after entry, and

(4) The declaration contains the importer's passport number and country of issue.

(e) The vehicle or equipment item requires further manufacturing operations to perform its intended function, other than the addition of readily attachable equipment items such as mirrors, wipers, or tire and rim assemblies, or minor finishing operations such as painting, and any part of such vehicle that is required to be marked by part 541 of this chapter is marked in accordance with that part.

(f) The vehicle does not conform with all applicable Federal motor vehicle safety and bumper standards (but does conform with all applicable Federal theft prevention standards), but the importer is eligible to import it because:

(1) The importer has furnished a bond in an amount equal to 150% of the dutiable value of the vehicle, containing the terms and conditions specified in section 591.8; and

(2)(i) The importer has registered with NHTSA pursuant to part 592 of this chapter, and such registration has not been revoked or suspended, and the Administrator has determined pursuant to part 593 of this chapter that the model and model year of the vehicle to be imported is eligible for importation into the United States; or

(ii) The importer has executed a contract or other agreement with an importer who has registered with NHTSA pursuant to part 592 of this chapter and whose registration has not been suspended or revoked; and the Administrator has determined pursuant to part 593 of this chapter that the model and model year of the vehicle to be imported is eligible for importation into the United States;

(g) [Reserved]

(h) The vehicle does not conform with all applicable Federal motor vehicle safety, bumper, and theft prevention standards, but the importer is eligible to import it because (s)he:

(1)(i) Is a member of the personnel of a foreign government on assignment in the United States, or a member of the Secretariat of a public international organization so designated under the International Organization Immunities Act, and within the class of persons for

whom free entry of motor vehicles has been authorized by the Department of State;

(ii) Is importing the motor vehicle on a temporary basis for the personal use of the importer, and will register it through the Office of Foreign Missions of the Department of State;

(iii) Will not sell the vehicle to any person in the United States, other than a person eligible to import a vehicle under this paragraph; and

(iv) Will obtain from the Office of Foreign Missions of the Department of State, before departing the United States at the conclusion of a tour of duty, an ownership title to the vehicle good for export only; or

(2)(i) Is a member of the armed forces of a foreign country on assignment in the United States;

(ii) Is importing the vehicle on a temporary basis, and for the personal use of the importer;

(iii) Will not sell the vehicle to any person in the United States, other than to a person eligible to import a vehicle under this subsection; and

(iv) Will export the vehicle upon departing the United States at the conclusion of a tour of duty.

(i)(1) The vehicle is 25 or more years old.

(2) The equipment item was manufactured on a date when no applicable safety or theft prevention standard was in effect.

(j)(1) The vehicle or equipment item does not conform with all applicable Federal motor vehicle safety and bumper standards, but is being imported solely for the purpose of:

(i) Research;

(ii) Investigations;

(iii) Show or display;

(iv) Demonstrations or training; or

(v) Competitive racing events;

(2)(i) The importer has received written permission from NHTSA; or

(ii) The importer is an original manufacturer of motor vehicles (or a wholly owned subsidiary thereof) that are certified to comply with all applicable Federal motor vehicle safety standards; and

(3) The importer will provide the Administrator with documentary proof of export or destruction not later than 30 days following the end of the period for which the vehicle has been admitted into the United States.

(k) The equipment item is subject to the theft prevention standard, and is marked in accordance with the requirements of part 541 of this chapter.

[54 FR 40078, Sept. 29, 1989, as amended at 55 FR 3747, Feb. 5, 1990; 55 FR 11378, Mar. 28, 1990; 55 FR 17439, Apr. 25, 1990; 57 FR 2047, Jan. 17, 1992; 57 FR 44703, Sept. 29, 1992; 59 FR 31560, June 20, 1994; 64 FR 37882, July 14, 1999]

§ 591.6 Documents accompanying declarations.

Declarations of eligibility for importation made pursuant to § 591.5 must be accompanied by the following certification and documents, where applicable.

(a) A declaration made pursuant to § 591.5(a) shall be accompanied by a statement substantiating that the vehicle was not manufactured for use on the public roads, or that the equipment item was not manufactured for use on a motor vehicle or is not an item of motor vehicle equipment.

(b) A declaration made pursuant to § 591.5(e) shall be accompanied by:

(1) (For a motor vehicle) a document meeting the requirements of § 568.4 of part 568 of this chapter.

(2) (For an item of motor vehicle equipment) a written statement issued by the manufacturer of the equipment item which states the applicable Federal motor vehicle safety standard(s) with which the equipment item is not in compliance, and which describes the further manufacturing required for the equipment item to perform its intended function.

(c) A declaration made pursuant to paragraph § 591.5(f), and under a bond for the entry of a single vehicle, shall be accompanied by a bond in the form shown in Appendix A, in an amount equal to 150% of the dutiable value of the vehicle, or, if under bond for the entry of more than one vehicle, shall be accompanied by a bond in the form shown in Appendix B and by Customs Form CF 7501, for the conformance of the vehicle(s) with all applicable Federal motor vehicle safety and bumper standards, or, if conformance is not achieved, for the delivery of such vehicle to the Secretary of the Treasury for

export at no cost to the United States, or for its abandonment.

(d) A declaration made pursuant to §591.5(f) by an importer who is not a Registered Importer shall be accompanied by a copy of the contract or other agreement that the importer has with a Registered Importer to bring the vehicle into conformance with all applicable Federal motor vehicle safety standards.

(e) A declaration made pursuant to §591.5(h) shall be accompanied by a copy of the importer's official orders, or, if a qualifying member of the personnel of a foreign government on assignment in the United States, the name of the embassy to which the importer is accredited.

(f) A declaration made pursuant to §591.5(j) shall be accompanied by the following documentation:

(1) A declaration made pursuant to §591.5(j)(1)(i), (ii), (iv), or (v) and (j)(2)(i) shall be accompanied by a letter from the Administrator authorizing importation pursuant to §591.5(j)(1)(i), (ii), (iv), or (v) and (j)(2)(i). Any person seeking to import a motor vehicle or motor vehicle equipment pursuant to these sections shall submit, in advance of such importation, a written request to the Administrator containing a full and complete statement identifying the vehicle or equipment, its make, model, model year or date of manufacture, VIN if a motor vehicle, and the specific purpose(s) of importation. The discussion of purpose(s) shall include a description of the use to be made of the vehicle or equipment. If use on the public roads is an integral part of the purpose for which the vehicle or equipment is imported, the statement shall request permission for use on the public roads, describing the purpose which makes such use necessary, and stating the estimated period of time during which use of the vehicle or equipment on the public roads is necessary. The request shall also state the intended means of final disposition, and disposition date, of the vehicle or equipment after completion of the purposes for which it is imported. The request shall be addressed to Director, Office of Vehicle Safety Compliance (NSA–32), National Highway Traffic Safety Administration, Room 6111, 400 Seventh Street, SW, Washington, DC 20590.

(2) A declaration made pursuant to §591.5(j)(1)(iii) and (j)(2)(i) shall be accompanied by a letter from the Administrator authorizing importation pursuant to §591.5(j)(1)(iii) and (j)(2)(i). Any person seeking to import a motor vehicle or motor vehicle equipment pursuant to those sections shall submit, in advance of such importation, a written request to the Administrator containing a full and complete statement identifying the equipment item or the vehicle and its make, model, model year or date of manufacture, VIN, and mileage at the time the request is made. The importer's written request to the Administrator shall explain why the vehicle or equipment item is of historical or technological interest. The importer shall also provide a statement that, until the vehicle is not less than 25 years old, (s)he shall not sell, or transfer possession of, or title to, the vehicle, and shall not license it for use, or operate it on the public roads, except under such terms and conditions as the Administrator may authorize. If the importer wishes to operate the vehicle on the public roads, the request to the Administrator shall include a description of the purposes for which (s)he wishes to use it on the public roads, a copy of an insurance policy or a contract to acquire an insurance policy, which contains as a condition thereof that the vehicle will not accumulate mileage of more than 2,500 miles in any 12-month period and a statement that the importer shall maintain such policy in effect until the vehicle is not less than 25 years old, a statement that the importer will allow the Administrator to inspect the vehicle at any time after its importation to verify that the accumulated mileage of the vehicle is not more than 2,500 miles in any 12-month period, and a statement that the vehicle will not be used on the public roads unless it is in compliance with the regulations of the Environmental Protection Agency.

(3) A declaration made pursuant to §591.5(j)(2)(ii) shall be accompanied by the written statement of its importer describing the use to be made of the vehicle or equipment item. If use on the public roads is an integral part of the

purpose for which the vehicle or equipment item is imported, the statement shall describe the purpose which makes such use necessary, state the estimated period of time during which use of the vehicle or equipment item on the public roads is necessary, and state the intended means of final disposition (and disposition date) of the vehicle or equipment item after completion of the purpose for which it is imported.

[54 FR 40078, Sept. 29, 1989, as amended at 55 FR 3747, Feb. 5, 1990; 55 FR 6994, Feb. 28, 1990; 55 FR 11379, Mar. 28, 1990; 57 FR 2047, Jan. 17, 1992; 57 FR 29043, June 30, 1992; 58 FR 12908, Mar. 8, 1993; 59 FR 52097, Oct. 14, 1994; 60 FR 57954, Nov. 24, 1995; 64 FR 37883, July 14, 1999]

§ 591.7 Restrictions on importations.

(a) A vehicle or equipment item which has entered the United States under a declaration made pursuant to § 591.5(j), and for which a Temporary Importation Bond has been provided to the Secretary of the Treasury, shall not remain in the United States for a period that exceeds 3 years from its date of entry.

(b) If the importer of a vehicle or equipment item under § 591.5(j) does not intend to export or destroy the vehicle or equipment item not later than 3 years after the date of entry, and intends to pay duty to the U.S. Customs Service on such vehicle or equipment item, the importer shall request permission in writing from the Administrator for the vehicle or equipment item to remain in the United States for an additional period of time not to exceed 5 years from the date of entry. Such a request must be received not later than 60 days before the date that is 3 years after the date of entry. Such vehicle or equipment item shall not remain in the United States for a period that exceeds 5 years from the date of entry, unless further written permission has been obtained from the Administrator.

(c) An importer of a vehicle which has entered the United States under a declaration made pursuant to § 591.5(j)(2)(i) shall not sell, or transfer possession of, or title to, the vehicle, and shall not license it for use, or operate it on the public roads, except under such terms and conditions as the Administrator may authorize in writing. An importer of a vehicle which has entered the United States under a declaration made pursuant to § 591.5(j)(2)(ii) shall at all times retain title to it.

(d) Any violation of a term or condition imposed by the Administrator in a letter authorizing importation for on-road use under § 591.5(j), or a change of status under paragraph (e) of this section, including a failure to allow inspection upon request to verify that the accumulated mileage of the vehicle is not more than 2,500 miles in any 12-month period, shall be considered a violation of 49 U.S.C. 30112(a) for which a civil penalty may be imposed. Such a violation will also act to void the authorization and require the exportation of the vehicle. With respect to importations under § 591.6(f)(2) or a change of status to an importation for show or display as provided under paragraph (e) of this section, if the Administrator has reason to believe that a violation has occurred, the Administrator may tentatively conclude that a term of entry has been violated, but shall make no final conclusion until the importer or owner has been afforded an opportunity to present data, views, and arguments as to why there is no violation or why a penalty should not be imposed.

(e) The owner of a vehicle located in the United States on June 9, 1998, which the owner had imported pursuant to § 591.5(j), may apply to the Administrator on or before February 14, 2000 for a change in any such term or condition contained in the Administrator's letter. If the owner requests a change to importation for show or display, the request to the Administrator shall contain the information and statements required under § 591.6(f)(2) for a new importation for show or display. All requests for change shall be sent to the Director, Office of Vehicle Safety Compliance (NSA–32), National Highway Traffic Safety Administration, Room 6111, 400 Seventh Street, SW, Washington, DC 20590.

[54 FR 40078, Sept. 29, 1989, as amended at 55 FR 6994, Feb. 28, 1990; 57 FR 2047, Jan. 17, 1992; 58 FR 12908, Mar. 8, 1993; 59 FR 31560, June 20, 1994; 64 FR 37883, July 14, 1999]

§591.8 Conformance bond and conditions.

(a) The bond required under section 591.6(c) for importation of a vehicle not originally manufactured to conform with all applicable standards issued under part 571 and part 581 of this chapter shall cover only one motor vehicle, and shall be in an amount equal to 150% of the dutiable value of the vehicle. However, a registered importer may enter vehicles under a bond of a continuing nature that covers an indefinite number of motor vehicles 150% of whose total dutiable value at any point in time does not exceed $1,000,000.

(b) The principal on the bond shall be the importer of the vehicle.

(c) The surety on the bond shall possess a certificate of authority to underwrite Federal bonds. (See list of certificated sureties at 54 FR 27800, June 30, 1989)

(d) In consideration of the release from the custody of the U.S. Customs Service or the withdrawn from a Customs bonded warehouse into the commerce of, or for consumption in, the United States, of a motor vehicle not originally manufactured to conform to all applicable standards issued under part 571 and part 581 of this chapter, the obligors (principal and surety) shall agree to the following conditions of the bond:

(1) To have such vehicle brought into conformity with all applicable standards issued under part 571 and part 581 of this chapter within 120 days after the date of entry:

(2) In the case of a vehicle imported pursuant to section 591.5(f), to file (or if not a Registered Importer, to cause the Registered Importer of the vehicle to file) with the Administrator, a certificate that the vehicle complies with each Federal motor vehicle safety and bumper standard in the year that the vehicle was manufactured and which applies in such year to the vehicle; or

(3) In the case of a Registered Importer, not to release custody of the vehicle to any person for license or registration for use on public roads, streets, or highways, or license or register the vehicle from the date of entry until 30 calendar days after it has certified compliance of the vehicle to the Administrator, unless the Administrator has notified the principal before 30 calendar days that (s)he has accepted such certification, and that the vehicle and bond may be released, except that the vehicle shall not be released if the principal has received written notice from the Administrator that an inspection of the vehicle will be required, or that there is reason to believe that such certification is false or contains a misrepresentation;

(4) In the case of a Registered Importer, to cause the vehicle to be available for inspection, if the principal has received written notice from the Administrator that an inspection is required.

(5) In the case of a Registered Importer, not to release the vehicle until the Administrator is satisfied with the certification and any modification thereof, if the principal has received written notice from the Administrator that there is reason to believe that the certification is false or contains a misrepresentation.

(6) If the principal has received written notice from the Administrator that the vehicle has been found not to comply with all applicable Federal motor vehicle safety standards, and written demand that the vehicle be abandoned to the United States, or delivered to the Secretary of the Treasury for export (at no cost to the United States), to abandon the vehicle to the United States, or to deliver the vehicle, or cause the vehicle to be delivered to, the custody of the District Director of Customs of the port of entry listed above, or to any other port of entry, and to execute all documents necessary for exportation of the vehicle from the United States, at no cost to the United States; or in default of abandonment or redelivery after proper notice by the Administrator to the principal, to pay to the Administrator the amount of the bond.

(e) If the principal defaults on the obligation of paragraph (d)(6) of this section, to abandon the vehicle to the United States or to redeliver the vehicle to the custody of a District Director of Customs and to execute all documents necessary for its exportation,

the obligors shall pay to the Administrator the amount of the bond given under the provisions of this section.

[55 FR 11379, Mar. 28, 1990, as amended at 59 FR 31560, June 20, 1994]

§ 591.9 Petitions for remission or mitigation of forfeiture.

(a) After a bond has been forfeited, a principal and/or a surety may petition for remission of forfeiture. A principal and/or surety may petition for mitigation of forfeiture only if the motor vehicle has been imported pursuant to paragraph 591.5(f) and the condition not met relates to the compliance of a passenger motor vehicle with part 581 of this chapter.

(b) A petition for remission or mitigation shall:

(1) Be addressed to the Administrator, identified as either a petition for remission or for mitigation, submitted in triplicate, and signed by the principal and/or the surety.

(2) State the make, model, model year, and VIN of the vehicle involved, and contain the Customs Entry number under which the vehicle entered the United States.

(3) State the facts and circumstances relied on by the petitioner to justify remission or mitigation.

(4) Be filed within 30 days from the date of the mailing of the notice of forfeiture incurred.

(c) A false statement contained in a petition may subject the petitioner to prosecution under the provisions of 18 U.S.C. 1001.

(d) If the Administrator finds that all conditions of the bond have, in fact, been fulfilled, the forfeiture is remitted.

(e) A decision to mitigate a forfeiture upon condition that a stated amount is paid shall be effective for not more than 60 days from the date of notice to the petitioner of such decision. If payment of the stated amount is not made, or arrangements made for delayed or installment payment, the full claim of forfeiture shall be deemed applicable. The Administrator shall collect the claim, or, if unable to collect the claim within 120 days, shall refer the matter to the Department of Justice.

[55 FR 11380, Mar. 28, 1990, as amended at 59 FR 31560, June 20, 1994]

§ 591.10 Offer of cash deposits or obligations of the United States in lieu of sureties on bonds.

(a) In lieu of sureties on any bond required under § 591.6(c), an importer may offer United States money, United States bonds (except for savings bonds), United States certificates of indebtedness, Treasury notes, or Treasury bills in an amount equal to the amount of the bond.

(b) At the time the importer deposits any obligation of the United States, other than United States money, with the Administrator, (s)he shall deliver a duly executed power of attorney and agreement, in the form shown in appendix C to this part, authorizing the Administrator or delegate of the Administrator, in case of any default in the performance of any of the conditions of the bond, to sell the obligation so deposited, and to apply the proceeds of sale, in whole or in part, to the satisfaction of any penalties for violations of 49 U.S.C. 30112 and 49 U.S.C. 32506 arising by reasons of default.

(c) If the importer deposits money of the United States with the Administrator, the Administrator, or delegate of the Administrator, may apply the cash, in whole or in part, to the satisfaction of any penalties for violations of 49 U.S.C. 30112 and 49 U.S.C. 32506 arising by reason of default.

[58 FR 12908, Mar. 8, 1993, as amended at 59 FR 52097, Oct. 14, 1994]

APPENDIX A TO PART 591—SECTION 591.5(f) BOND FOR THE ENTRY OF A SINGLE VEHICLE

Department of Transportation

National Highway Traffic Safety Administration

BOND TO ENSURE CONFORMANCE WITH MOTOR VEHICLE SAFETY AND BUMPER STANDARDS

(To redeliver vehicle, to produce documents, to perform conditions of release, such as to bring vehicle into conformance with all applicable Federal motor vehicle safety and bumper standards)

Know All Men by These Presents That

---

name of principal or surety; if a corporation, the State of incorporation of

_____, as principal, street address or post office box number; city; state; ZIP code
and _____ of _____, name; State of incorporation, if any address
and _____ of _____, name; State of incorporation, if any address
as sureties, are held and firmly bound unto the UNITED STATES OF AMERICA in the sum of _____ dollars ($_____),
which represents 150% of the entered value of the following described motor vehicle as determined by the U.S. Customs Service:

_____

model year, make, series, engine and chassis numbers for the payment of which we bind ourselves, our heirs, executors, administrators, successors, and assigns (jointly and severally), firmly by these presents.

WITNESS our hands and seals this _____ day of _____, 199__.

WHEREAS, motor vehicles may be entered under the provisions of section 108 of the National Traffic and Motor Vehicle Safety Act, and section 106 of the Motor Vehicle Information and Cost Savings Act; and

_____

DOT Form XXXX

WHEREAS, pursuant to 49 CFR part 591, a regulation promulgated under the provisions of section 108, National Traffic and Motor Vehicle Safety Act of 1966, the above-bounden principal desires to import permanently the motor vehicle described above, which is a motor vehicle that was not originally manufactured to conform with the Federal motor vehicle safety and bumper standards; and

WHEREAS, pursuant to 49 CFR part 592, a regulation promulgated under the provisions of section 108, National Traffic and Motor Vehicle Safety Act of 1966, as amended, the above-bounden principal has been granted the status of Registered Importer of motor vehicles not originally manufactured to conform with the Federal motor vehicle safety standards (or, if not a Registered Importer, has a contract with a Registered Importer covering the motor vehicle described above); and

WHEREAS, pursuant to 49 CFR part 593, a regulation promulgated under the provisions of section 108, National Traffic and Motor Vehicle Safety Act of 1966, as amended, the Administrator of the National Highway Traffic Safety Administration has determined that the motor vehicle described above is eligible for importation into the United States; and

WHEREAS, the motor vehicle described above has been imported at the port of _____, and entered at said port for consumption on entry No. _____, dated _____, 199__,

NOW, THEREFORE, THE CONDITION OF THIS OBLIGATION IS SUCH THAT—

(1) The above-bounden principal (the ''principal''), in consideration of the permanent admission into the United States of the motor vehicle described above (the ''vehicle''), voluntarily undertakes and agrees to have such vehicle brought into conformity with all applicable Federal motor vehicle safety and bumper standards within a reasonable time after such importation, as specified by the Administrator of the National Highway Traffic Safety Administration (the ''Administrator'');

(2) The principal shall then file, or if not a Registered Importer, shall then cause the Registered Importer of the vehicle to file, with the Administrator, a certificate that the vehicle complies with each Federal motor vehicle safety standard in the year that the vehicle was manufactured and which applies in such year to the vehicle, and that the vehicle complies with the Federal bumper standard (if applicable);

(3) The principal, if a Registered Importer, shall not release custody of the vehicle to any person for license or registration for use on public roads, streets, or highways, or license or register the vehicle from the date of entry until 30 calendar days after it has certified compliance of the vehicle to the Administrator, unless the Administrator notifies the principal before 30 calendar days that (s)he has accepted such certification and the vehicle and bond may be released, except that no such release shall be permitted, before or after the 30th calendar day, if the principal has received written notice from the Administrator that an inspection of such vehicle will be required, or that there is reason to believe that such certification is false or contains a misrepresentation.

(4) And if the principal has received written notice from the Administrator that an inspection is required, the principal shall cause the vehicle to be available for inspection, and the vehicle and bond shall be promptly released after completion of an inspection showing no failure to comply. However, if the inspection shows a failure to comply, the vehicle and bond shall not be released until such time as the failure to comply ceases to exist;

(5) And if the principal has received written notice from the Administrator that there is reason to believe that the certificate is false or contains a misrepresentation, the vehicle or bond shall not be released until the Administrator is satisfied with the certification and any modification thereof;

(6) And if the principal has received written notice from the Administrator that the vehicle has been found not to comply with all applicable Federal motor vehicle safety and bumper standards, and written demand that the vehicle be abandoned to the United States, or delivered to the Secretary of the

Treasury for export (at no cost to the United States), the principal shall abandon the vehicle to the United States, or shall deliver the vehicle, or cause the vehicle to be delivered to, the custody of the District Director of Customs of the port of entry listed above, or any other port of entry, and shall execute all documents necessary for exportation of the vehicle from the United States, at no cost to the United States; or in default of abandonment or redelivery after proper notice by the Administrator to the principal, the principal shall pay to the Administrator the amount of this obligation;

Then this obligation shall be void; otherwise it shall remain in full force and effect.

Signed, sealed, and delivered in the presence of—

_____

Name Address
_____(SEAL)
(Principal)

_____

Name Address

_____

Name Address
_____(SEAL)
(Surety)

_____

Name Address

CERTIFICATE AS TO CORPORATE PRINCIPAL

I, _____ certify that I am the _____ of the corporation named as principal in the within bond; that _____, who signed the bond on behalf of the principal, was then _____ of said corporation; that I know his/her signature, and his/her signature thereto is genuine; and that said bond was duly signed, sealed, and attested for and in behalf of said corporation by authority of its governing body.

_____[Corporate Seal]

To be used when a power of attorney has been filed with NHTSA. May be executed by secretary, assistant secretary, or other officer.

[55 FR 11380, Mar. 28, 1990, as amended at 59 FR 52097, Oct. 14, 1994]

APPENDIX B—SECTION 591.5 (f) BOND FOR THE ENTRY OF MORE THAN A SINGLE VEHICLE

DEPARTMENT OF TRANSPORTATION—NATIONAL HIGHWAY TRAFFIC SAFETY ADMINISTRATION—BOND TO ENSURE CONFORMANCE WITH U.S. FEDERAL MOTOR VEHICLE SAFETY AND BUMPER STANDARDS

(To redeliver vehicles, to produce documents, to perform conditions of release, such as to bring vehicles into conformance with all applicable U.S. Federal motor vehicle safety and bumper standards)

Know All People by These Presents That [principal's name, mailing address which includes city, state, ZIP code, and state of incorporation if a corporation], as principal, and [surety's name, mailing address which includes city, state, ZIP code and state of incorporation] are held and firmly bound unto the UNITED STATES OF AMERICA in the sum of [bond amount in words] dollars (§[bond amount in numbers]) which represents 150% of the entered value of the following described motor vehicle(s) as determined by the U.S. Customs Service:

[model year, make, series, engine and chassis number of each vehicle]

for the payment of which we bind ourselves, our heirs, executors, administrators, successors, and assigns (jointly and severally), firmly by these presents

WITNESS our hands and seals this _____ day of _____, 199____

WHEREAS, motor vehicles may be entered under the provisions of 49 U.S.C. 30112 and 49 U.S.C. 32506; and

WHEREAS, pursuant to 49 CFR part 591, a regulation promulgated under the provisions of 49 U.S.C. 30112, the above-bounden principal desires to import permanently the motor vehicles described above, which are motor vehicles that were not originally manufactured to conform with the Federal motor vehicle safety and bumper standards; and

WHEREAS, pursuant to 49 CFR part 592, a regulation promulgated under the provisions of 49 U.S.C. 30112, the above bounden principal has been granted the status of Registered Importer of motor vehicles not originally manufactured to conform with the Federal motor vehicle safety standards; and

WHEREAS, pursuant to 49 CFR part 593, a regulation promulgated under the provisions of 49 U.S.C. 30112, the Administrator of the National Highway Traffic Safety Administration has determined that each of the

motor vehicles described above is eligible for importation into the United States; and

WHEREAS, the motor vehicles described above have been imported at the port of [name of port of entry], and entered at said port for consumption on entry No. _____ dated _____, 199____,

NOW, THEREFORE, THE CONDITION OF THIS OBLIGATION IS SUCH THAT—

(1) The above-bounden principal (''the principal''), in consideration of the permanent admission into the United States of the motor vehicles described above, voluntarily undertakes and agrees to have such vehicles brought into conformity with all applicable Federal motor vehicle safety and bumper standards within a reasonable time after such importation, as specified by the Administrator of the National Highway Traffic Safety Administration (the ''Administrator'');

(2) For each vehicle described above (''such vehicle''), the principal shall then file, with the Administrator, a certificate that such vehicle complies with each Federal motor vehicle safety standard in the year that such vehicle was manufactured and which applies in such year to such vehicle, and that such vehicle complies with the Federal bumper standard (if applicable);

(3) The principal shall not release custody of any vehicle to any person, or license or register the vehicle, from the date of entry until 30 calendar days after it has certified compliance of such vehicle to the Administrator, unless the Administrator notifies the principal before 30 days that (s)he has accepted such certification and such vehicle and all liability under this bond for such vehicle may be released, except that no such release shall be permitted, before or after the 30th calendar day, if the principal has received written notice from the Administrator that an inspection of such vehicle will be required, or that there is reason to believe that such certification is false or contains a misrepresentation.

(4) And if the principal has received written notice from the Administrator that an inspection of such vehicle is required, the principal shall cause such vehicle to be available for inspection, and such vehicle and all liability under this bond for such vehicle shall be promptly released after completion of an inspection showing no failure to comply. However, if the inspection shows a failure to comply, such vehicle and all liability under this bond for such vehicle shall not be released until such time as the failure to comply ceases to exist;

(5) And if the principal has received written notice from the Administrator that there is reason to believe that such certificate is false or contains a misrepresentation, such vehicle and all liability under this bond for such vehicle shall not be released until the Administrator is satisfied with such certification and any modification thereof;

(6) And if the principal has received written notice from the Administrator that such vehicle has been found not to comply with all applicable Federal motor vehicle safety and bumper standards, and written demand that such vehicle be abandoned to the United States, or delivered to the Secretary of the Treasury for export (at no cost to the United States), the principal shall abandon such vehicle to the United States, or shall deliver such vehicle, or cause such vehicle to be delivered to, the custody of the District Director of Customs of the port of entry listed above, or any other port of entry, and shall execute all documents necessary for exportation of such vehicle from the United States, at no cost to the United States; or in default of abandonment or redelivery after proper notice by the Administrator for the principal, the principal shall pay to the Administrator an amount equal to 150% of the entered value of such vehicle as determined by the U.S. Customs Service;

Then this obligation shall be void; otherwise it shall remain in full force and effect. [At this point the terms agreed upon between the principal and surety for termination of the obligation may be entered]

Signed, sealed and delivered in the presence of

_____

PRINCIPAL: (name and address)

_____

(Signature) (SEAL)

_____

(Printed name and title)

_____

SURETY: (name and address)

_____

(Signature)

_____

(Printed name and title)

[60 FR 57954, Nov. 24, 1995]

APPENDIX C TO PART 591—POWER OF ATTORNEY AND AGREEMENT

_____ does constitute and appoint the Administrator of the National Highway Traffic Safety Administration, United States Department of Transportation, or delegate, as attorney for the undersigned, for and in the name of the undersigned to collect or to sell, assign, and transfer the securities described below as follows:

Title
Matures
Int. Rate

Denom.
Serial #
Coupon/registered

The securities having been deposited by it as security for the performance of the agreements undertaken in a bond with the United States, executed on the date of _____ , _____, the terms and conditions of which are incorporated by reference into this power of attorney and agreement and made a part hereof. The undersigned agrees that in case of any default in the performance of any of the agreements the attorney shall have full power to collect the securities or any part thereof, or to sell, assign, and transfer the securities or any part thereof, or to sell, assign, and transfer the securities of any part thereof at public or private sale, without notice, free from any equity of redemption and without appraisement or valuation, notice and right to redeem being waived and to apply the proceeds of the sale or collection in whole or in part to the satisfaction of any obligation arising by reason of default. The undersigned further agrees that the authority granted by this agreement is irrevocable. The undersigned ratifies and confirms whatever the attorney shall do by virtue of this agreement.

Witnessed and signed this _____ day of _____, _____.

_____

Before me, the undersigned, a notary public within and for the County of _____ in the State of _____, personally appeared _____ and acknowledged the execution of the foregoing power of attorney.

Witness my hand and notarial seal this _____ day of _____, 199__.

[Notarial seal]

Notary Public _____

[58 FR 12909, Mar. 8, 1993]

PART 592—REGISTERED IMPORTERS OF VEHICLES NOT ORIGINALLY MANUFACTURED TO CONFORM TO THE FEDERAL MOTOR VEHICLE SAFETY STANDARDS

Sec.

592.1 Scope.
592.2 Purpose.
592.3 Applicability.
592.4 Definitions.
592.5 Requirements for registration and its maintenance.
592.6 Duties of a registered importer.
592.7 Revocation, suspension and reinstatement of registration.
592.8 Inspection; release of vehicle and bond.

AUTHORITY: Pub. L. 106–414, 114 Stat. 1800 (49 U.S.C. 322(a), 49 U.S.C. 30141–47); delegation of authority at 49 CFR 1.50.

SOURCE: 54 FR 40090, Sept. 29, 1989, unless otherwise noted.

§ 592.1 Scope.

This part establishes procedures under 49 U.S.C. 30141(c) for the registration of importers of motor vehicles that were not originally manufactured to comply with all applicable Federal motor vehicle safety standards. This part also establishes the duties of Registered Importers.

[59 FR 52098, Oct. 14, 1994]

§ 592.2 Purpose.

The purpose of this part is to provide content and format requirements for persons who wish to register with the Administrator as importers of motor vehicles not originally manufactured to conform to all applicable Federal motor vehicle safety standards, to provide procedures for the registration f importers and for the suspension, revocation and reinstatement of registration, and to set forth the duties required of Registered Importers.

§ 592.3 Applicability.

This part applies to any person who wishes to register with the Administrator as an importer of nonconforming vehicles, and to any person who is registered as an importer.

§ 592.4 Definitions.

All terms in this part that are defined in 4 9 U.S.C. 30102 and 30125 are used as defined therein.

Administrator means the Administrator, National Highway Traffic Safety Administration.

NHTSA means the National Highway Traffic Safety Administration.

Registered Importer means any person that the Administrator has registered as an importer pursuant to section 592.5(b).

[54 FR 40090, Sept. 29, 1989, as amended at 59 FR 52098, Oct. 14, 1994]

§ 592.5 Requirements for registration and its maintenance.

(a) Any person wishing to register as an importer of motor vehicles not

originally manufactured to conform to all applicable Federal motor vehicle safety standards must file an application which:

(1) Is headed with the words ''Application for Registration as Importer'', and submitted in three copies to: Administrator, National Highway Traffic Safety Administration, Room 6115, 400 7th Street SW., Washington, DC 20590, Attn: NEF–32 Importer Registration.

(2) Is written in the English language.

(3) Sets forth the full name, address, and title of the person preparing the application, and the name, address, and telephone number of the person for whom application is made.

(4) Sets forth, as applicable, the names of all owners, including shareholders, partners, or sole proprietors, of the person for whom application is made.

(5) If any of the owners listed in paragraph (a)(4) of this section are corporations, sets forth the names of all shareholders of such corporation whose ownership interest is 10 percent or greater.

(6) Contains a statement that the applicant has never had a registration revoked pursuant to § 592.7, nor is it or was it, directly or indirectly, owned or controlled by, or under common ownership or control with, a person who has had a registration revoked pursuant to § 592.7.

(7) Contains a certified check payable to the Treasurer of the United States, for the amount of the initial annual fee established pursuant to part 594 of this chapter.

(8) Contains a copy of a contract to acquire, effective upon its registration as an importer, a prepaid mandatory service insurance policy underwritten by an independent insurance company, or a copy of such policy, in an amount that equals $2,000 for each motor vehicle for which the applicant will furnish a certificate of conformity to the Administrator, for the purpose of ensuring that the applicant will be able financially to remedy any noncompliance or safety related defect determined to exist in any such motor vehicle in accordance with part 573 and part 577 of this chapter. If the application is accompanied by a copy of a contract to acquire such a policy, the applicant shall provide NHTSA with a copy of the policy within 10 days after it has been issued to the applicant.

(9) Sets forth in full data, views, and arguments of the applicant sufficient to establish that the applicant will be able, through a records system of acquiring and maintaining names and addresses of owners of vehicles for which it furnishes a certificate of conformity, and Vehicle Identification Numbers (VINs) of such vehicles, to notify such owners that a noncompliance or safety related defect exists in such vehicles, and that it will be financially able to remedy a noncompliance or safety related defect through repurchase or replacement of such vehicles, or technically able through repair of such vehicles, in accordance with part 573 and part 577 of this chapter.

(10) Segregates and specifies any part of the information and data submitted under this part that the applicant wishes to have withheld from public disclosure in accordance with part 512 of this chapter.

(11) Contains a statement that the applicant will fully comply with all duties of a registered importer as set forth in § 592.6.

(12) Has the applicant's signature acknowledged by a notary public.

(b) If the information submitted is incomplete, the Administrator notifies the applicant of the areas of insufficiency, and that the application is in abeyance.

(c) If the Administrator deems it necessary for a determination upon the application, NHTSA conducts an inspection of the applicant. Subsequent to the inspection, NHTSA calculates the costs attributable to such inspection, and notifies the applicant in writing that such costs comprise a component of the initial annual fee and must be paid before a determination is made upon its application.

(d) When the application is complete (and, if applicable, when a sum representing the inspection component of the initial annual fee is paid), it is reviewed and a determination made whether the applicant should be granted the status of Registered Importer. Such determination may be based, in part, upon an inspection by NHTSA of

the conformance, storage, and recordkeeping facilities of the applicant. If the Administrator determines that the application is acceptable, (s)he informs the applicant in writing that its application is approved, and issues it a Registered Importer Number. If the information is not acceptable, the Administration informs the applicant in writing that its application is not approved. No refund is made of those components of the initial annual fee representing the costs of processing the application, and conducting an inspection. Refund is made of that component of the initial annual fee representing the remaining costs of administration of the registration program.

(e) In order to maintain its registration, a Registered Importer shall provide an annual statement that affirms that all information provided under paragraphs (a)(4), (a)(5), (a)(6), (a)(9), and (a)(11) of this section remains correct, and that includes a current copy of its insurance policy procured pursuant to paragraph (a)(8) of this section. Such statement shall be titled ''Yearly Statement of Registered Importer'', and shall be filed not later than October 31 of each year. A Registered Importer shall also pay such annual fee or fees as the Administrator may from time to time establish under part 594 of this chapter. An annual fee shall be paid not later than October 31 of any calendar year, and shall be the annual fee for the fiscal year that began on October 1 of that calendar year. Any other fee shall be payable not later than 30 calendar days after the date that the Administrator has notified the Registered Importer of it in writing.

(f) A Registered Importer shall notify the Administrator in writing of any change that occurs in the information which is submitted in its application, not later than the end of the 30th calendar day after such change.

(g) A registration granted under this part is not transferable.

[54 FR 40090, Sept. 29, 1989, as amended at 54 FR 47088, Nov. 9, 1989; 55 FR 37330, Sept. 11, 1990]

§ 592.6 Duties of a registered importer.

Each Registered Importer shall:

(a) With respect to each motor vehicle that it imports into the United States, furnish to the Secretary of the Treasury (acting on behalf of the Administrator) a bond in an amount equal to 150 per cent of the entered value of the vehicle, as determined by the Secretary of the Treasury, to ensure that such vehicle either will be brought into conformity with all applicable Federal motor vehicle safety standards prescribed under part 571 of this chapter within 120 calendar days after such importation, or will be exported (at no cost to the United States) by the importer or the Secretary of the Treasury, or abandoned to the United States. However, if the Registered Importer has procured a continuous entry bond, it shall furnish the Administrator with such bond, and shall furnish the Secretary of the Treasury (acting on behalf of the Administrator) with a photocopy of such bond and Customs Form CF 7501 at the time of importation of each motor vehicle.

(b) Establish, maintain, and retain for 8 years from the date of entry of any nonconforming vehicle for which it furnishes a certificate of conformity pursuant to paragraph (e) of this section, organized records, correspondence and other documents relating to the importation, modification, and substantiation of certification of conformity to the Administrator, including but not limited to:

(1) The declaration required by § 591.5 of this chapter, and 19 CFR 12.80.

(2) All vehicle or equipment purchase or sales orders or agreements, conformance agreements with importers other than Registered Importers, and correspondence between the Registered Importer and the owner or purchaser of each vehicle for which it has furnished a certificate of conformity.

(3) The last known name and address of the owner or purchaser of each motor vehicle for which it has furnished a certificate of conformity, and the VIN number of such vehicle.

(4) Records, both photographic and documentary, reflecting the modifications made and submitted to the Administrator pursuant to paragraph (e) of this section.

(c) Records, both photographic and documentary, sufficient to substantiate each subsequent certificate furnished to the Administrator for a vehicle of the same model and model year for which documentation has been furnished NHTSA in support of the initial certificate.

(d) Permanently affix to each motor vehicle, upon completion of modifications, a label that meets the requirements of §567.4 of this chapter, which identifies the Registered Importer, and provide to the Administrator a photocopy of the label attesting that such vehicle has been brought into conformity with all applicable Federal motor vehicle safety and bumper standards.

(e) Certify to the Administrator, upon completion of modifications, that the vehicle has been brought into conformity with all applicable Federal motor vehicle safety and bumper standards, and that it is the person legally responsible for bringing the vehicle into conformity.

(f) In substantiation of the initial certification provided for a specific model and model year, submit to the Administrator photographic and documentary evidence of conformance with each applicable Federal motor vehicle safety and bumper standard, and with respect to subsequent certifications of such model and model year, such information, if any, as the Administrator may request.

(g) With respect to any motor vehicle for which it has furnished a certificate of conformity to the Administrator, provide notification and remedy according to part 573 and part 577 of this chapter, under any determination.

(1) That a vehicle to which it is substantially similar, as determined under part 593 of this chapter, incorporates a safety related defect or fails to conform with an applicable Federal motor vehicle safety standard. However, this obligation does not exist if the manufacturer of the vehicle or Registered Importer demonstrates to the Administrator that the defect or noncompliance is not present in such vehicle.

(2) That the vehicle incorporates a safety related defect or fails to conform with an applicable Federal motor vehicle safety standard, without reference to whether such may exist in a vehicle to which it is substantially similar, or whether such exists because it was created by the original manufacturer or by the Registered Importer.

(i) The requirement of 49 U.S.C. 30120 that remedy shall be provided without charge shall not apply if the noncompliance or safety related defect exists in a motor vehicle whose first sale after importation occurred more than 10 calendar years before notification respecting the failure to comply is furnished pursuant to part 577 of this chapter, except that if a safety related defect exists and is attributable to the original manufacturer and not the Registered Importer, the requirements of 49 U.S.C. 30120 shall not apply to a motor vehicle whose date of first purchase, if known, or if not known, whose date of manufacture as determined by the Administrator, is more than 10 calendar years from the date on which notification is furnished pursuant to part 577 of this chapter.

(ii) Notification furnished pursuant to this paragraph and part 577 of this chapter shall include the statement that in the absence of the Registered Importer's facility being within 50 miles of the owner's mailing address for performance of repairs, such repairs may be performed at a specific facility designated by the Registered Importer within 50 miles, or, if no such facility is designated, anywhere, and shall also include an explanation how repair is to be accomplished without charge to the vehicle owner.

(h) In order to allow the Administrator to determine whether a Registered Importer is meeting its statutory responsibilities, admit representatives of NHTSA during operating hours, upon demand, and upon presentation of credentials, to copy documents, or to inspect, monitor, or photograph any of the following:

(1) Any facility where any vehicle, for which a Registered Importer has the responsibility of providing a certificate of conformity to applicable safety standards, is being modified, tested, or stored;

(2) Any facility where any record or other document relating to modification, testing, or storage of vehicles being conformed, is filed;

(3) Any part or aspect of activities relating to the modification, testing, and/or storage of vehicles by the Registered Importer.

(4) Any motor vehicle for which it has provided a certification of conformity to the Administrator, and which remains in its custody or under its control.

(i) Maintain in effect a prepaid mandatory service insurance policy underwritten by an independent insurance company as a guarantor of its performance under paragraph (g) of this section.

(j) With respect to any motor vehicle it has imported and for which it has furnished a performance bond, to deliver such vehicle to the Secretary of the Treasury for export, or to abandon it to the United States, upon demand by the Administrator if such vehicle has not been brought into conformity with all applicable Federal motor vehicle safety standards.

[54 FR 40090, Sept. 29, 1989, as amended at 54 FR 47088, Nov. 9, 1989; 58 FR 30997, May 28, 1993; 59 FR 31560, June 20, 1994; 59 FR 52098, Oct. 14, 1994; 65 FR 68110, Nov. 14, 2000]

§ 592.7 Revocation, suspension and reinstatement of registration.

(a) If the Administrator has not received any fee assessed and owing by the end of the 30th calendar day after such fee is due and payable, a registration is automatically suspended at the beginning of the 31st calendar day, and the Registered Importer is immediately notified in writing of the suspension at the address contained in its most recent annual statement or amendment thereof.

(b) If the Administrator has reason to believe that a Registered Importer has knowingly filed a false or misleading certification, and that its registration should be automatically suspended or revoked, (s)he notifies the Registered Importer in writing of the facts giving rise to such reason to believe, affording an opportunity to present data, views, and arguments, either in writing or in person, within 30 calendar days after receipt of the Administrator's letter, as to whether it has submitted false or misleading certification, and as to why the registration ought not to be revoked or suspended. The Administrator then makes a decision after the 30-day period on the basis of all information then available. If, after consideration of all the data available, the Administrator determines that the Registered Importer has knowingly filed a false or misleading certification, the registration is automatically suspended or revoked, and the Registered Importer notified in writing. Any suspension or revocation is effective as of the date of the Administrator's determination. The Administrator shall state the period of any suspension in the notice to the Registered Importer.

(c) The Administrator may suspend a registration if a Registered Importer fails to comply with any requirement set forth in 49 U.S.C. 30141(c), § 592.5(c), or § 592.6, or if (s)he denies an application filed under § 592.5(d). The Administrator may revoke a registration after any failure to comply with any such requirement, or if (s)he denies an application filed under § 592.5(d). If the Administrator has reason to believe that there has been such a failure to comply and that the Registered Importer's registration should be revoked or suspended, (s)he notifies the Registered Importer in writing, affording an opportunity to present data, views, and arguments, either in writing or in person, within 30 calendar days after receipt of the Administrator's letter, as to whether there has been a failure to comply and as to why the registration ought not to be revoked or suspended. The Administrator then makes a decision after the 30-day period on the basis of all information then available. If the Administrator determines that a registration should be revoked or suspended, (s)he notifies the Registered Importer in writing. A revocation is effective immediately. A suspension is effective beginning with a date specified in the written notification.

(d) A Registered Importer whose registration has been revoked or suspended may request reconsideration of the revocation or suspension if the request is supported by factual matter which was not available to the Administrator at the time the registration was suspended or revoked.

(e) If its registration has been revoked, a Registered Importer is ineligible to apply for reregistration under

this part. No refund is provided of any annual or other fees the Registered Importer has paid for the fiscal year in which its registration is revoked. If its registration has been suspended, it may file an application for reinstatement of its registration.

(f) The Administrator shall reinstate a suspended registration if the cause that led to the suspension no longer exists, as determined by the Administrator, either upon the Administrator's motion, or upon the submission of further information or fees by the Registered Importer.

[54 FR 40090, Sept. 29, 1989, as amended at 59 FR 52098, Oct. 14, 1994]

§ 592.8 Inspection; release of vehicle and bond.

(a) With respect to any motor vehicle for which it is obligated to provide a certificate of conformity to the Administrator as required by § 592.6(d), a Registered Importer shall not obtain licensing or registration of the motor vehicle for use on the public roads, or release custody of it for such licensing and registration, except in accordance with the provisions of this section.

(b) When conformance modifications to a motor vehicle have been completed, a Registered Importer shall submit the certification required by § 592.6(d) to the Administrator. In certifying a vehicle that the Administrator has determined to be substantially similar to one that has been certified by its original manufacturer for sale in the United States, the Registered Importer may rely on any certification by the original manufacturer with respect to identical safety features if it also certifies that any modification that it undertook did not affect the compliance of such safety features. Each submission shall be mailed by certified mail, return receipt requested, or by private carriers such as Federal Express, to: Administrator, National Highway Traffic Safety Administration, Room 6115, 400 7th Street SW., Washington, DC, 20590, Attn: NEF–32, or be submitted electronically by FAX (202–366–1024), or in person. Each submission shall identify the location where the vehicle will be stored and is available for inspection, pending NHTSA action upon the submission.

(c) Before the end of the 30th calendar day after receipt of certification of a motor vehicle pursuant to § 592.6(d), the Administrator may inform the Registered Importer in writing that an inspection of the vehicle is required to ascertain the veracity of the certification. Written notice includes a proposed inspection date, which is as soon as practicable. If inspection of the vehicle indicates that the vehicle has been properly certified, at the conclusion of the inspection the Registered Importer is provided an instrument of release. If inspection of the vehicle shows that the vehicle has not been properly certified, the Registered Importer shall either make the modifications necessary to substantiate its certification, and provide a new certification for the standard(s) in the manner provided for in paragraph (b) of this section, or deliver the vehicle to the Secretary of the Treasury for export, or abandon it to the United States. Before the end of the 30th calendar day after receipt of new certification, the Administrator may require a further inspection in accordance with the provisions of this subsection.

(d) The Administrator may by written notice request certification verification by the Registered Importer before the end of the 30th calendar day after the date the certification was received by the Administrator. If the basis for such request is that the certification is false or contains a misrepresentation, the Registered Importer shall be afforded an opportunity to present written data, views, and arguments as to why the certification is not false or misleading or does not contain a misrepresentation. The Administrator may require an inspection pursuant to paragraph (c) of this section. The motor vehicle and performance bond involved shall not be released unless the Administrator is satisfied with the certification.

(e) If a Registered Importer has received no written notice from the Administrator by the end of the 30th calendar day after it has furnished a certification to the Administrator, the Registered Importer may release from custody the vehicle that is covered by the certification, or have it licensed or registered for use on the public roads.

(f) If the Administrator accepts a certification without requiring an inspection, (s)he notifies the Registered Importer in writing, and provides a copy to the importer of record. Such notification shall be provided not later than the 25th calendar day after the Administrator has received such certification.

(g) Release of the performance bond shall constitute acceptance of certification or completion of inspection of the vehicle concerned, but shall not preclude a subsequent decision by the Administrator pursuant to 49 U.S.C. 30118 that the vehicle fails to conform to any applicable Federal motor vehicle safety standard.

[54 FR 40090, Sept. 29, 1989, as amended at 55 FR 37330, Sept. 11, 1990; 59 FR 52098, Oct. 14, 1994]

PART 593—DETERMINATIONS THAT A VEHICLE NOT ORIGINALLY MANUFACTURED TO CONFORM TO THE FEDERAL MOTOR VEHICLE SAFETY STANDARDS IS ELIGIBLE FOR IMPORTATION

Sec.

593.1 Scope.
593.2 Purpose.
593.3 Applicability.
593.4 Definitions.
593.5 Petitions for eligibility determinations.
593.6 Basis for petition.
593.7 Processing of petitions.
593.8 Determinations on the agency's initiative.
593.9 Effect of affirmative determinations; lists.
593.10 Availability for public inspection.
APPENDIX A TO PART 593—LIST OF VEHICLES DETERMINED TO BE ELIGIBLE FOR IMPORTATION

AUTHORITY: 49 U.S.C. 322 and 30141(b); delegation of authority at 49 CFR 1.50.

SOURCE: 54 FR 40099, Sept. 29, 1989, unless otherwise noted.

§ 593.1 Scope.

This part establishes procedures under section 108(c) of the National Traffic and Motor Vehicle Safety Act, as amended (15 U.S.C. 1397(c)), for making determinations whether a vehicle that was not originally manufactured to conform with all applicable Federal motor vehicle safety standards, and is not otherwise eligible for importation under part 591 of this chapter, may be imported into the United States because it can be modified to meet the Federal standards.

§ 593.2 Purpose.

The purpose of this part is to provide content and format requirements for any Registered Importer and manufacturer who wishes to petition the Administrator for a determination that a vehicle not originally manufactured to conform to all applicable Federal motor vehicle safety standards is eligible to be imported into the United States because it can be modified to meet the standards. The purpose of this part is also to specify procedures under which the Administrator makes eligibility determinations pursuant to those petitions as well as eligibility determinations on the agency's initiative.

§ 593.3 Applicability.

This part applies to a motor vehicle that was not originally manufactured and certified by its original manufacturer to conform with all applicable Federal motor vehicle safety standards and that is offered for importation into the United States.

§ 593.4 Definitions.

All terms in this part that are defined in section 102 of the National Traffic and Motor Vehicle Safety Act (15 U.S.C. 1391) are used as defined therein.

Administrator means the Administrator of the National Highway Traffic Safety Administration.

Model year means the year used by a manufacturer to designate a discrete vehicle model irrespective of the calendar year in which the vehicle was actually produced, or the model year as designated by the vehicle's country of origin, or, if neither the manufacturer nor the country of origin has made such a designation, the calendar year that begins on September 1 and ends on August 31 of the next calendar year.

NHTSA means the National Highway Traffic Safety Administration.

Registered Importer means any person who has been granted registered importer status by the Administrator

pursuant to paragraph 592.5(b) of this chapter, and whose registration has not been revoked.

§ 593.5 Petitions for eligibility determinations.

(a) A manufacturer or Registered Importer may petition the Administrator for a determination that a vehicle that does not comply with all applicable Federal motor vehicle safety standards is eligible for importation, either

(1) On the basis that the vehicle:

(i) Is substantially similar to a vehicle which was originally manufactured for importation into and sale in the United States and which bore a certification affixed by its manufacturer pursuant to part 567 of this chapter, and

(ii) Is capable of being readily modified to conform to all applicable Federal motor vehicle safety standards; or

(2) On the basis that the vehicle has safety features that comply with or are capable of being modified to comply with all applicable Federal motor vehicle safety standards.

(b) Each petition filed under this part must—

(1) Be written in the English language;

(2) Be headed with the words ''Petition for Import Eligibility Determination'' and submitted in three copies to: Administrator, National Highway Traffic Safety Administration, Room 6115, 400 7th Street SW., Washington, DC 20590, Attn: NEF–32 Import Eligibility Determinations;

(3) State the full name and address of the petitioner.

(4) If the petitioner is a Registered Importer, include the Registered Importer Number assigned by NHTSA pursuant to part 592 of this chapter.

(5) Set forth the basis for the petition and the information required by § 593.6 (a) or (b), as appropriate;

(6) Specify any part of the information and data submitted which petitioner requests be withheld from public disclosure in accordance with part 512 of this chapter; and

(7) Submit a certified check payable to the Treasurer of the United States, for the amount of the vehicle eligibility petition fee established pursuant to part 594 of this chapter.

(c) The knowing and willful submission of false, fictitious or fraudulent information may subject the petitioner to the criminal penalties of 18 U.S.C. 1001.

[54 FR 40099, Sept. 29, 1989, as amended at 55 FR 37330, Sept. 11, 1990]

§ 593.6 Basis for petition.

(a) If the basis for the petition is that the vehicle is substantially similar to a vehicle which was originally manufactured for importation into and sale in the United States, and which was certified by its manufacturer pursuant to part 567 of this chapter, and that it is capable of being readily modified to conform to all applicable Federal motor vehicle safety standards, the petitioner shall provide the following information:

(1) Identification of the original manufacturer, model, and model year of the vehicle for which a determination is sought.

(2) Identification of the original manufacturer, model, and model year of the vehicle which the petitioner believes to be substantially similar to that for which a determination is sought.

(3) Substantiation that the manufacturer of the vehicle identified by the petitioner under paragraph (a)(2) of this section originally manufactured it for importation into and sale in the United States, and affixed a label to it certifying that it complied with all applicable Federal motor vehicle safety standards.

(4) Data, views and arguments demonstrating that the vehicle identified by the petitioner under paragraph (a)(1) of this section is substantially similar to the vehicle identified by the petitioner under paragraph (a)(2) of this section.

(5) With respect to each Federal motor vehicle safety standard that applied to the vehicle identified by the petitioner under paragraph (a)(2) of this section, data, views, and arguments demonstrating that the vehicle identified by the petitioner under paragraph (a)(1) of this section either was originally manufactured to conform to such standard, or is capable of being readily modified to conform to such standard.

(b) If the basis of the petition is that the vehicle's safety features comply with or are capable of being modified to comply with all applicable Federal motor vehicle safety standards, the petitioner shall provide the following information:

(1) Identification of the model and model year of the vehicle for which a determination is sought.

(2) With respect to each Federal motor vehicle safety standard that would have applied to such vehicle had it been originally manufactured for importation into and sale in the United States, data, views, and arguments demonstrating that the vehicle has safety features that comply with or are capable of being modified to conform with such standard. The latter demonstration shall include a showing that after such modifications, the features will conform with such standard.

§ 593.7 Processing of petitions.

(a) NHTSA will review each petition for sufficiency under §§ 593.5 and 593.6. If the petition does not contain all the information required by this part, NHTSA notifies the petitioner, pointing out the areas of insufficiency, and stating that the petition will not receive further consideration until the required information is provided. If the additional information is not provided within the time specified by NHTSA in its notification, NHTSA may dismiss the petition as incomplete, and so notify the petitioner. When the petition is complete, its processing continues.

(b) NHTSA publishes in the FEDERAL REGISTER, affording opportunity for comment, a notice of each petition containing the information required by this part.

(c) No public hearing, argument, or other formal proceeding is held on a petition filed under this part.

(d) If the Administrator is unable to determine that the vehicle in a petition submitted under § 593.6(a) is one that is substantially similar, or (if it is substantially similar) is capable of being readily modified to meet the standards, (s)he notifies the petitioner, and offers the petitioner the opportunity to supplement the petition by providing the information required for a petition submitted under paragraph 593.6(b).

(e) If the Administrator determines that the petition does not clearly demonstrate that the vehicle model is eligible for importation, (s)he denies it and notifies the petitioner in writing. (S)he also publishes in the FEDERAL REGISTER a notice of denial and the reasons for it. A notice of denial also states that the Administrator will not consider a new petition covering the model that is the subject of the denial until at least 3 months from the date of the notice of denial. There is no administrative reconsideration available for petition denials.

(f) If the Administrator determines that the petition clearly demonstrates that the vehicle model is eligible for importation, (s)he grants it and notifies the petitioner. (S)he also publishes in the FEDERAL REGISTER a notice of grant and the reasons for it.

[54 FR 40099, Sept. 29, 1989, as amended at 55 FR 37330, Sept. 11, 1990]

§ 593.8 Determinations on the agency's initiative.

(a) The Administrator may make a determination of eligibility on his or her own initiative. The agency publishes in the FEDERAL REGISTER, affording opportunity for comment, a notice containing the information available to the agency (other than confidential information) relevant to the basis upon which eligibility may be determined.

(b) No public hearing, argument, or other formal proceeding is held upon a notice published under this section.

(c) The Administrator publishes a second notice in the FEDERAL REGISTER in which (s)he announces his or her determination whether the vehicle is eligible or ineligible for importation, and states the reasons for the determination. A notice of ineligibility also announces that no further determination for the same model of motor vehicle will be made for at least 3 months following the date of publication of the notice. There is no administrative reconsideration available for a decision of ineligibility.

§ 593.9 Effect of affirmative determinations; lists.

(a) A notice of grant is sufficient authority for the importation by persons other than the petitioner of any vehicle of the same model specified in the grant.

(b) The Administrator publishes annually in the FEDERAL REGISTER a list of determinations made under Sec. 593.7, and Sec. 593.8.

§ 593.10 Availability for public inspection.

(a) Except as specified in paragraph (b) of this section, information relevant to a determination under this part, including a petition and supporting data, and the grant or denial of the petition or the making of a determination on the Administrator's initiative, is available for public inspection in the Docket Section, Room 5109, National Highway Traffic Safety Administration, 400 Seventh St., SW., Washington, DC 20590. Copies of available information may be obtained, as provided in part 7 of this chapter.

(b) Except for release of confidential information authorized under part 512 of this chapter, information made available for inspection under paragraph (a) of this section does not include information for which confidentiality has been requested and granted in accordance with part 512 of this chapter, and 5 U.S.C. 552(b). To the extent that a petition contains material relating to the methodology by which the petitioner intends to achieve conformance with a specific standard, the petitioner may request confidential treatment of such material on the grounds that it contains a trade secret or confidential information in accordance with part 512 of this chapter.

APPENDIX A TO PART 593—LIST OF VEHICLES DETERMINED TO BE ELIGIBLE FOR IMPORTATION

(a) Each vehicle on the following list is preceded by a vehicle eligibility number. The importer of a vehicle admissible under any eligibility decision must enter that number on the HS–7 Declaration Form accompanying entry to indicate that the vehicle is eligible for importation.

(1) ''VSA'' eligibility numbers are assigned to all vehicles that are decided to be eligible for importation on the initiative of the Administrator under Sec. 593.8.

(2) ''VSP'' eligibility numbers are assigned to vehicles that are decided to be eligible under Sec. 593.7(f), based on a petition from a manufacturer or registered importer submitted under Sec. 593.5(a)(1), which establishes that a substantially similar U.S.-certified vehicle exists.

(3) ''VCP'' eligibility numbers are assigned to vehicles that are decided to be eligible under Sec. 593.7(f), based on a petition from a manufacturer or registered importer submitted under Sec. 593.5(a)(2), which establishes that the vehicle has safety features that comply with, or are capable of being altered to comply with, all applicable Federal motor vehicle safety standards.

(b) Vehicles for which eligibility decisions have been made are listed alphabetically by make. Eligible models within each make are listed numerically by ''VSA,'' ''VSP,'' or ''VCP'' number.

(c) All hyphens used in the Model Year column mean ''through'' (for example, ''1973–1989'' means ''1973 through 1989'').

(d) The initials ''MC'' used in the Manufacturer column mean ''motorcycle.''

(e) The initials ''SWB'' used in the Model Type column mean ''Short Wheel Base.''

(f) The initials ''LWB'' used in the Model Type column mean ''Long Wheel Base.''

(g) For vehicles with a European country of origin, the term ''Model Year'' ordinarily means calendar year in which the vehicle was produced.

(h) All vehicles are left-hand-drive vehicles unless noted as RHD. The initials ''RHD'' used in the Model Type column mean ''Right-Hand-Drive.''

VEHICLES CERTIFIED BY THEIR ORIGINAL MANUFACTURER AS COMPLYING WITH ALL APPLICABLE CANADIAN MOTOR VEHICLE SAFETY STANDARDS

VSA–80	(a) All passenger cars less than 25 years old that were manufactured before September 1, 1989; (b) All passenger cars manufactured on or after September 1, 1989, and before September 1, 1996, that, as originally manufactured, are equipped with an automatic restraint system that complies with Federal Motor Vehicle Safety Standard (FMVSS) No. 208; (c) All passenger cars manufactured on or after September 1, 1996, and before September 1, 2002, that, as originally manufactured, are equipped with an automatic restraint system that complies with FMVSS No. 208, and that comply with FMVSS No. 214;

VEHICLES CERTIFIED BY THEIR ORIGINAL MANUFACTURER AS COMPLYING WITH ALL APPLICABLE CANADIAN MOTOR VEHICLE SAFETY STANDARDS—Continued

	(d) All passenger cars manufactured on or after September 1, 2002, and before September 1, 2007, that, as originally manufactured, are equipped with an automatic restraint system that complies with FMVSS No. 208, and that comply with FMVSS Nos. 201, 214, 225, and 401.
VSA–81	(a) All multipurpose passenger vehicles, trucks, and buses with a GVWR of 4,536 kg (10,000 lb) or less that are less than 25 years old and that were manufactured before September 1, 1991; (b) All multipurpose passenger vehicles, trucks, and buses with a GVWR of 4,536 kg (10,000 lb) or less that were manufactured on and after September 1, 1991, and before September 1, 1993 and that, as originally manufactured, comply with FMVSS Nos. 202 and 208. (c) All multipurpose passenger vehicles, trucks, and buses with a GVWR of 4,536 kg (10,000 lb) or less that were manufactured on or after September 1, 1993, and before September 1, 1998, and that, as originally manufactured, comply with FMVSS Nos. 202, 208, and 216; (d) All multipurpose passenger vehicles, trucks, and buses with a GVWR of 4,536 kg (10,000 lb) or less that were manufactured on or after September 1, 1998, and before September 1, 2002, and that, as originally manufactured, comply with FMVSS Nos. 202, 208, 214, and 216; (e) All multipurpose passenger vehicles, trucks, and buses with a GVWR of 4,536 kg (10,000 lb) or less that were manufactured on or after September 1, 2002, and before September 1, 2007, and that, as originally manufactured, comply with FMVSS Nos. 201, 202, 208, 214, and 216, and, insofar as it is applicable, with FMVSS No. 225.
VSA–82	All multipurpose passenger vehicles, trucks, and buses with a GVWR greater than 4,536 kg (10,000 lb) that are less than 25 years old.
VSA–83	All trailers and motorcycles less than 25 years old.

VEHICLES MANUFACTURED FOR OTHER THAN THE CANADIAN MARKET

Manufacturer	VSP	VSA	VCP	Model type	Body	Model year
Acura	305			Legend		1990–1992
Acura	51			Legend		1988
Acura	77			Legend		1989
Alfa Romeo	196			164		1989
Alfa Romeo	76			164		1991
Alfa Romeo	156			164		1994
Alfa Romeo	124			GTV		1985
Alfa Romeo	70			Spider		1987
Audi	317			100		1990–1992
Audi	93			100		1989
Audi	244			100		1993
Audi	160			200 Quattro		1987
Audi	223			80		1988–1989
Audi	352			A4		1996–2000
Audi	332			A6		1998–1999
Audi	337			A8		1997–2000
Audi	238			Avant Quattro		1996
Audi	364			TT		2000–2001
BMW	248			3 Series		1995–1997
BMW	356			3 Series		2000
BMW	379			3 Series		1999, 2001
BMW		66		316		1978–1982
BMW	25			316		1986
BMW		23		318i and 318iA		1981–1989
BMW		16		320, 320i, and 320iA		1978–1985
BMW	283			320I		1990–1991
BMW		67		323i		1978–1985
BMW		30		325, 325i, 325iA, and 325E		1985–1989
BMW		24		325e and 325eA		1984–1987
BMW	197			325i		1992–1994
BMW	96			325i		1991
BMW		31		325iS and 325iSA		1987–1989
BMW	205			325iX		1990
BMW		33		325iX and 325iXA		1988–1989
BMW	194			5 Series		1990–1995
BMW	249			5 Series		1996–1997
BMW	314			5 Series		1998–1999
BMW	345			5 Series		2000
BMW	4			518i		1986
BMW		68		520 and 520i		1978–1983
BMW	9			520iA		1989
BMW		26		524tdA		1985–1986
BMW		69		525 and 525i		1979–1982
BMW	5			525i		1989

VEHICLES MANUFACTURED FOR OTHER THAN THE CANADIAN MARKET—Continued

Manufacturer	VSP	VSA	VCP	Model type	Body	Model year
BMW		21		528e and 528eA		1982–1988
BMW		20		528i and 528iA		1979–1984
BMW		15		530i and 530iA		1978
BMW		22		533i and 533iA		1983–1984
BMW		25		535i and 535iA		1985–1989
BMW	15			625CSi		1981
BMW	32			628CSi		1980
BMW		18		633CSi and 633CSiA		1978–1984
BMW		27		635, 635CSi, and 635CSiA		1979–1989
BMW	313			7 Series		1995–1999
BMW	366			7 Series		1999–2001
BMW	299			7 Series		1990–1991
BMW	299			7 Series		1993–1994
BMW	232			7 Series		1992
BMW		70		728 and 728i		1978–1985
BMW	14			728i		1986
BMW		71		730, 730i, and 730iA		1978–1980
BMW	6			730iA		1988
BMW		72		732i		1980–1984
BMW		19		733i and 733iA		1978–1984
BMW		28		735, 735i, and 735iA		1980–1989
BMW		73		745i		1980–1986
BMW	361			8 Series		1991–1995
BMW		78		All other models except those in the M1 and Z1 series.		1978–1989
BMW		29		L7		1986–1987
BMW		35		M3		1988–1989
BMW		34		M5		1988
BMW		32		M6		1987–1988
BMW	260			Z3		1996–1998
BMW	350			Z8		2000–2001
BMW MC	228			K1		1990–1993
BMW MC	285			K100		1984–1992
BMW MC	303			K1100, K1200		1993–1998
BMW MC	229			K75S		1987–1995
BMW MC	231			R1100		1994–1997
BMW MC	368			R1100		1998–2001
BMW MC	177			R1100RS		1994
BMW MC	359			R1200C		1998–2001
BMW MC	295			R80, R100		1986–1995
Bristol Bus			2	VRT Bus-Double Decker		1978–1981
Cadillac	300			DeVille		1994–1999
Cadillac	375			Seville		1991
Chevrolet	150			400SS		1995
Chevrolet	298			Astro Van		1997
Chevrolet	349			Blazer (plant code of "K" or "2" in the 11th position of the VIN).		1997
Chevrolet	369			Cavalier		1997
Chevrolet	365			Corvette		1992
Chevrolet	242			Suburban		1989–1991
Chrysler	344			Daytona		1992
Chrysler	373			Grand Voyager		1998
Chrysler	276			LHS		1996
Chrysler	216			Shadow		1989
Chrysler	273			Town and Country		1993
Citroen			1	XM		1990–1992
Dodge	135			Ram		1994–1995
Ducati MC	241			600SS		1992–1996
Ducati MC	220			748 Biposto		1996–1997
Ducati MC	201			900SS		1990–1996
Eagle	323			Vision		1994
Ferrari		76		208, 208 Turbo (all models)		1978–1988
Ferrari		36		308 (all models)		1978–1985
Ferrari		37		328 (except GTS)		1985, 1988–1989
Ferrari		37		328 GTS		1985–1989
Ferrari	86			348 TB		1992
Ferrari	161			348 TS		1992
Ferrari	376			360		2001
Ferrari	327			360 Modena		1999–2000
Ferrari	256			456		1995

VEHICLES MANUFACTURED FOR OTHER THAN THE CANADIAN MARKET—Continued

Manufacturer	VSP	VSA	VCP	Model type	Body	Model year
Ferrari	173			512 TR		1993
Ferrari	377			550		2001
Ferrari	292			550 Marinello		1997–1999
Ferrari	355			F355		1996–1998
Ferrari	259			F355		1995
Ferrari	226			F50		1995
Ferrari		38		GTO		1985
Ferrari		74		Mondial (all models)		1980–1989
Ferrari		39		Testarossa		1987–1989
Ford	265			Bronco		1995–1996
Ford	322			Escort (Nicaragua)		1996
Ford			9	Escort RS		1994–1995
Ford	268			Explorer		1991–1998
Ford	367			Mustang		1993
Ford	250			Windstar		1995–1998
Freightliner	179			FLD12064ST		1991–1996
Freightliner	178			FTLD112064SD		1991–1996
GMC	384			Blazer		1978
GMC	383			Jimmy		1980
GMC	134			Suburban		1992–1994
Harley Davidson	202			FX, FL, XL Series		1978–1997
Harley Davidson	253			FX, FL, XL Series		1998
Harley Davidson	281			FX, FL, XL Series		1999
Harley Davidson	321			FX, FL, XL Series		2000
Harley Davidson	362			FX, FL, XL Series		2001
Harley Davidson	372			FX, FL, XL Series		2002
Harley Davidson	374			VRSCA		2002
Hobson			8	Horse Trailer		1985
Honda	319			Accord		1992–1999
Honda	280			Accord		1991
Honda	128			Civic DX		1989
Honda	309			Prelude		1994–1997
Honda	191			Prelude		1989
Honda MC	106			CB1000F		1988
Honda MC	348			CMX250C		1978–1987
Honda MC	174			CP450SC		1986
Honda MC	358			RVF 400		1994–2000
Honda MC	290			VF750		1994–1998
Honda MC	358			VFR 400		1994–2000
Honda MC	315			VFR750		1991–1997
Honda MC	34			VFR750		1990
Honda MC	315			VFR800		1998–1999
Honda MC	294			VT600		1991–1998
Hyundai	269			Elantra		1992–1995
Jaguar	78			Sovereign		1993
Jaguar		41		XJ6		1978–1986
Jaguar	47			XJ6		1987
Jaguar	215			XJ6 Sovereign		1988
Jaguar		40		XJS		1980–1987
Jaguar	195			XJS		1994–1996
Jaguar	175			XJS		1991
Jaguar	129			XJS		1992
Jaguar	336			XJS, XJ6		1988–1990
Jaguar	330			XK–8		1998
Jaguar Daimler	12			Limousine		1985
Jeep	211			Cherokee		1991
Jeep	164			Cherokee		1992
Jeep	254			Cherokee		1993
Jeep	180			Cherokee		1995
Jeep	224			CJ–7		1979
Jeep	382			Grand Cherokee		2001
Jeep	389			Grand Cherokee		1997
Jeep	217			Wrangler		1993
Jeep	255			Wrangler		1995
Jeep	341			Wrangler		1998
Kawasaki MC	233			EL250		1992–1994
Kawasaki MC	190			KZ550B		1982
Kawasaki MC	182			ZX1000–B1		1988
Kawasaki MC	222			ZX400		1987–1997
Kawasaki MC	312			ZX6, ZX7, ZX9, ZX10, ZX11		1987–1999
Kawasaki MC	288			ZX600		1985–1998
Kawasaki MC	247			ZZR1100		1993–1998

VEHICLES MANUFACTURED FOR OTHER THAN THE CANADIAN MARKET—Continued

Manufacturer	VSP	VSA	VCP	Model type	Body	Model year
Ken-Mex	187			T800		1990–1996
Kenworth	115			T800		1992
KTM MC	363			Duke II		1995–2000
Land Rover	212			Defender 110		1993
Land Rover	338			Discovery		1994–1998
Lexus	293			GS300		1993–1996
Lexus	307			RX300		1998–1999
Lexus	225			SC300, SC400		1991–1996
Lincoln	144			Mark VII		1992
Magni MC	264			Australia, Sfida		1996–1998
Maserati	155			Bi–Turbo		1985
Mazda	184			MX–5 Miata		1990–1993
Mazda	199			RX–7		1986
Mazda	279			RX–7		1987–1995
Mazda	42			RX–7		1978–1981
Mazda	351			Xedos 9		1995–2000
Mercedes Benz		54		190	201.022	1984
Mercedes Benz		54		190 D	201.126	1984–1989
Mercedes Benz		54		190 D (2.2)	201.122	1984–1989
Mercedes Benz		54		190 E	201.028	1986–1989
Mercedes Benz	22			190 E	201.024	1990
Mercedes Benz	45			190 E	201.024	1991
Mercedes Benz	71			190 E	201.028	1992
Mercedes Benz	126			190 E	201.018	1992
Mercedes Benz		54		190 E (2.3)	201.024	1983–1989
Mercedes Benz		54		190 E (2.6)	201.029	1986–1989
Mercedes Benz		54		190 E 2.3 16	201.034	1984–1989
Mercedes Benz		52		200	123.220	1979–1985
Mercedes Benz		52		200	123.020	1978–1980
Mercedes Benz		55		200	124.020	1985
Mercedes Benz		52		200 D	123.120	1980–1982
Mercedes Benz	17			200 D	124.120	1986
Mercedes Benz	11			200 E	124.021	1989
Mercedes Benz	109			200 E	124.012	1991
Mercedes Benz	75			200 E	124.019	1993
Mercedes Benz	3			200 TE	124.081	1989
Mercedes Benz	168			220 E		1993
Mercedes Benz	167			220 TE Station Wagon		1993–1996
Mercedes Benz		52		230	123.023	1978–1985
Mercedes Benz		52		230 C	123.043	1978–1980
Mercedes Benz		52		230 CE	123.243	1980–1984
Mercedes Benz	84			230 CE	124.043	1991
Mercedes Benz	203			230 CE		1992
Mercedes Benz		52		230 E	123.223	1978–1985
Mercedes Benz		55		230 E	124.023	1985–1987
Mercedes Benz	1			230 E	124.023	1988
Mercedes Benz	20			230 E	124.023	1989
Mercedes Benz	19			230 E	124.023	1990
Mercedes Benz	74			230 E	124.023	1991
Mercedes Benz	127			230 E	124.023	1993
Mercedes Benz		52		230 T	123.083	1978–1985
Mercedes Benz		52		230 TE	123.283	1978–1985
Mercedes Benz		55		230 TE	124.083	1985
Mercedes Benz	2			230 TE	124.083	1989
Mercedes Benz		52		240 D	123.123	1978–1985
Mercedes Benz		52		240 TD	123.183	1978–1985
Mercedes Benz		52		250	123.026	1978–1985
Mercedes Benz	172			250 D		1992
Mercedes Benz	245			250 E		1990–1993
Mercedes Benz		55		260 E	124.026	1985–1989
Mercedes Benz	105			260 E	124.026	1992
Mercedes Benz	18			260 SE	126.020	1986
Mercedes Benz	28			260 SE	126.020	1989
Mercedes Benz		52		280	123.030	1978–1985
Mercedes Benz		52		280 C	123.050	1978–1980
Mercedes Benz		52		280 CE	123.053	1978–1985
Mercedes Benz		52		280 E	123.033	1978–1985
Mercedes Benz	166			280 E		1993
Mercedes Benz		53		280 S	126.021	1980–1983
Mercedes Benz		51		280 S	116.020	1978–1980
Mercedes Benz		44		280 SC	107.022	1978–1981
Mercedes Benz		51		280 SE	116.024	1978–1988

VEHICLES MANUFACTURED FOR OTHER THAN THE CANADIAN MARKET—Continued

Manufacturer	VSP	VSA	VCP	Model type	Body	Model year
Mercedes Benz		53		280 SE	126.022	1980–1985
Mercedes Benz		53		280 SEL	126.023	1980–1985
Mercedes Benz		51		280 SEL	116.025	1978–1980
Mercedes Benz		44		280 SL	107.042	1978–1985
Mercedes Benz		52		280 TE	123.093	1978–1985
Mercedes Benz		52		300 CD	123.150	1978–1985
Mercedes Benz		55		300 CE	124.050	1988–1989
Mercedes Benz	64			300 CE	124.051	1990
Mercedes Benz	83			300 CE	124.051	1991
Mercedes Benz	117			300 CE	124.050	1992
Mercedes Benz		52		300 D	123.133	1978–1985
Mercedes Benz		52		300 D	123.130	1978–1985
Mercedes Benz		55		300 D	124.130	1985–1986
Mercedes Benz		55		300 D Turbo	124.133	1985–1989
Mercedes Benz		55		300 E	124.030	1985–1989
Mercedes Benz	114			300 E	124.031	1992
Mercedes Benz	192			300 E 4-Matic		1990–1993
Mercedes Benz		53		300 SD	126.120	1981–1989
Mercedes Benz		53		300 SE	126.024	1985–1989
Mercedes Benz	68			300 SE	126.024	1990
Mercedes Benz		53		300 SEL	126.025	1986–1989
Mercedes Benz	21			300 SEL	126.025	1990
Mercedes Benz		44		300 SL	107.041	1986–1988
Mercedes Benz	7			300 SL	107.041	1989
Mercedes Benz	54			300 SL	129.006	1992
Mercedes Benz		52		300 TD	123.193	1978–1985
Mercedes Benz		55		300 TD Turbo	124.193	1986–1989
Mercedes Benz		55		300 TE	124.090	1986–1989
Mercedes Benz	40			300 TE	124.090	1990
Mercedes Benz	193			300 TE		1992
Mercedes Benz	142			320 SL		1992
Mercedes Benz	310			320 CE		1993
Mercedes Benz		44		350 SC	107.023	1978–1979
Mercedes Benz		51		350 SE	116.028	1978–1980
Mercedes Benz		51		350 SEL	116.029	1978–1980
Mercedes Benz		44		350 SL	107.043	1978
Mercedes Benz		44		380 SC	107.025	1981–1989
Mercedes Benz		53		380 SE	126.032	1979–1989
Mercedes Benz		53		380 SE	126.043	1982–1989
Mercedes Benz		53		380 SEL	126.033	1980–1989
Mercedes Benz		44		380 SL	107.045	1980–1989
Mercedes Benz	296			400 SE		1992–1994
Mercedes Benz	169			420 E		1993
Mercedes Benz		53		420 SE	126.034	1985–1989
Mercedes Benz	230			420 SE		1990–1991
Mercedes Benz	209			420 SEC		1990
Mercedes Benz		53		420 SEL	126.035	1986–1989
Mercedes Benz	48			420 SEL	126.035	1990
Mercedes Benz		44		420 SL	107.047	1986
Mercedes Benz		44		450 SC	107.024	1978–1989
Mercedes Benz		51		450 SE	116.032	1978–1980
Mercedes Benz		51		450 SEL	116.033	1978–1988
Mercedes Benz		51		450 SEL (6.9)	116.036	1978–1988
Mercedes Benz		44		450 SL	107.044	1978–1989
Mercedes Benz	56			500 E	124.036	1991
Mercedes Benz		44		500 SC	107.026	1978–1981
Mercedes Benz		53		500 SE	126.036	1980–1986
Mercedes Benz	35			500 SE	126.036	1988
Mercedes Benz	154			500 SE		1990
Mercedes Benz	26			500 SE	140.050	1991
Mercedes Benz		53		500 SEC	126.044	1981–1989
Mercedes Benz	66			500 SEC	126.044	1990
Mercedes Benz		53		500 SEL	126.037	1980–1989
Mercedes Benz	23			500 SEL	129.066	1989
Mercedes Benz	153			500 SEL		1990
Mercedes Benz	63			500 SEL	126.037	1991
Mercedes Benz		44		500 SL	107.046	1980–1989
Mercedes Benz	33			500 SL	129.066	1991
Mercedes Benz	60			500 SL	129.006	1992
Mercedes Benz		53		560 SEC	126.045	1986–1989
Mercedes Benz	141			560 SEC	126.045	1990
Mercedes Benz	333			560 SEC		1991

VEHICLES MANUFACTURED FOR OTHER THAN THE CANADIAN MARKET—Continued

Manufacturer	VSP	VSA	VCP	Model type	Body	Model year
Mercedes Benz		53		560 SEL	126.039	1986–1989
Mercedes Benz	89			560 SEL	126.039	1990
Mercedes Benz		44		560 SL	107.048	1986–1989
Mercedes Benz		43		600	100.012	1978–1981
Mercedes Benz		43		600 Landaulet	100.015	1978–1981
Mercedes Benz		43		600 Long 4dr	100.014	1978–1981
Mercedes Benz		43		600 Long 6dr	100.016	1978–1981
Mercedes Benz	185			600 SEC Coupe		1993
Mercedes Benz	121			600 SL	129.076	1992
Mercedes Benz		77		All other models except Model ID 114 and 115 with sales designations ''long,'' ''station wagon,'' or ambulance''.		1978–1989
Mercedes Benz	331			C Class		1994–1999
Mercedes Benz	370			CL500		1999–2001
Mercedes Benz	277			CL500		1998
Mercedes Benz	370			CL600		1999–2001
Mercedes Benz	380			CLK		1999–2001
Mercedes Benz	357			CLK320		1998
Mercedes Benz	354			E Series		1991–1995
Mercedes Benz	278			E200		1995–1998
Mercedes Benz	207			E200		1994
Mercedes Benz	168			E220		1994–1996
Mercedes Benz	245			E250		1994–1995
Mercedes Benz	166			E280		1994–1996
Mercedes Benz	240			E320		1994–1998
Mercedes Benz	318			E320 Station Wagon		1994–1999
Mercedes Benz	169			E420		1994–1996
Mercedes Benz	304			E500		1995–1997
Mercedes Benz	163			E500		1994
Mercedes Benz			18	G-Wagon		1999–2000
Mercedes Benz			3	G-Wagon 300	463.228	1993
Mercedes Benz			5	G-Wagon 300	463.228	1994
Mercedes Benz			5	G-Wagon 300	463.228	1990–1992
Mercedes Benz			6	G-Wagon 320		1995
Mercedes Benz			11	G-Wagon 463		1996
Mercedes Benz			15	G-Wagon 463		1997
Mercedes Benz			16	G-Wagon 463		1998
Mercedes Benz			21	G-Wagon 463 LWB		2001
Mercedes Benz			13	G-Wagon 463 LWB V–8		1992–1996
Mercedes Benz			14	G-Wagon 463 SWB		1990–1996
Mercedes Benz	342			S Class		1995–1998
Mercedes Benz	387			S Class	W220	1999–2002
Mercedes Benz	325			S Class		1999
Mercedes Benz	85			S280	140.028	1994
Mercedes Benz	236			S320		1994
Mercedes Benz	267			S420		1994
Mercedes Benz	371			S500		2000–2001
Mercedes Benz	235			S500		1994
Mercedes Benz	297			S600		1995–1999
Mercedes Benz	371			S600		2000–2001
Mercedes Benz	185			S600 Coupe		1994
Mercedes Benz	214			S600L		1994
Mercedes Benz	343			SE Class		1992–1994
Mercedes Benz	343			SEL Class		1992–1994
Mercedes Benz	329			SL Class		1993–1996
Mercedes Benz	386			SL Class	W129	1997–2000
Mercedes Benz			19	SL Class	R230	2001–2002
Mercedes Benz	257			SLK		1997–1998
Mercedes Benz	381			SLK		2000–2001
Mitsubishi	13			Galant SUP		1989
Mitsubishi	8			Galant VX		1988
Mitsubishi	170			Pajero		1984
Moto Guzzi MC	118			Daytona		1993
Moto Guzzi MC	264			Daytona RS		1996–1998
Nissan	162			240SX		1988
Nissan	198			300ZX		1984
Nissan		75		Fairlady and Fairlady Z		1978–1979
Nissan			17	GTS, GTR (RHD)		1990–1999
Nissan	138			Maxima		1989
Nissan	316			Pathfinder		1987–1995
Nissan	139			Stanza		1987
Nissan		75		Z and 280Z		1978–1981

VEHICLES MANUFACTURED FOR OTHER THAN THE CANADIAN MARKET—Continued

Manufacturer	VSP	VSA	VCP	Model type	Body	Model year
Peugeot		65		405		1989
Plymouth	353			Voyager		1996
Pontiac	189			Transport MPV		1993
Porsche	346			911		1997–2000
Porsche	29			911 C4		1990
Porsche		56		911 Cabriolet		1984–1989
Porsche		56		911 Carrera		1978–1989
Porsche	165			911 Carrera		1995–1996
Porsche	52			911 Carrera		1992
Porsche	165			911 Carrera		1993
Porsche	103			911 Carrera		1994
Porsche		56		911 Coupe		1978–1989
Porsche		56		911 Targa		1978–1989
Porsche		56		911 Turbo		1978–1989
Porsche	125			911 Turbo		1992
Porsche	347			911 Turbo		2001
Porsche		59		924 Coupe		1978–1989
Porsche		59		924 S		1987–1989
Porsche		59		924 Turbo Coupe		1979–1989
Porsche	266			928		1991–1996
Porsche	272			928		1997–1998
Porsche		60		928 Coupe		1978–1989
Porsche		60		928 GT		1979–1989
Porsche		60		928 S Coupe		1983–1989
Porsche		60		928 S4		1979–1989
Porsche	210			928 S4		1990
Porsche	97			944		1990
Porsche		61		944 Coupe		1982–1989
Porsche		61		944 S Coupe		1987–1989
Porsche	152			944 S2 2 door Hatchback		1990
Porsche		61		944 Turbo Coupe		1985–1989
Porsche	116			946		1994
Porsche		79		All models except Model 959		1978–1989
Porsche	390			Boxster		1997–2001
Porsche	390			Boxster (before 9/1/2002)		2002
Porsche			20	GT2		2001
Porsche	388			GT2		2002
Rolls Royce	340			Bentley		1987–1989
Rolls Royce	186			Bentley Brooklands		1993
Rolls Royce	258			Bentley Continental R		1990–1993
Rolls Royce	53			Bentley Turbo		1986
Rolls Royce	291			Bentley Turbo R		1992–1993
Rolls Royce	243			Bentley Turbo R		1995
Rolls Royce	122			Camargue		1984–1985
Rolls Royce	339			Corniche		1978–1985
Rolls Royce		62		Silver Shadow		1978–1979
Rolls Royce	188			Silver Spur		1984
Saab	158			900		1983
Saab	270			900 S		1987–1989
Saab	219			900 SE		1990–994
Saab	219			900 SE		1996–1997
Saab	213			900 SE		1995
Saab	59			9000		1988
Saab	334			9000		1994
Sprite			12	Musketeer Trailer		1980
Suzuki MC	111			GS 850		1985
Suzuki MC	287			GSF 750		1996–1998
Suzuki MC	208			GSX 750		1983
Suzuki MC	275			GSXR 750		1986–1998
Suzuki MC	227			GSXR1100		1986–1997
Toyota	308			Avalon		1995–1998
Toyota		63		Camry		1987–1988
Toyota	39			Camry		1989
Toyota		64		Celica		1987–1988
Toyota		65		Corolla		1987–1988
Toyota	252			Land Cruiser		1981–1988
Toyota	218			Land Cruiser		1990–1996
Toyota	320			Land Cruiser		1978–1980
Toyota	101			Land Cruiser		1989
Toyota	324			MR2		1990–1991
Toyota	302			Previa		1993–1997
Toyota	326			Previa		1991–1992

VEHICLES MANUFACTURED FOR OTHER THAN THE CANADIAN MARKET—Continued

Manufacturer	VSP	VSA	VCP	Model type	Body	Model year
Toyota	328			RAV4		1996
Toyota	200			Van		1987–1988
Triumph MC	311			Thunderbird		1995–1999
Vespa MC	378			ET2, ET4		2001–2002
Volkswagen	237			Beetle Convertible		1978–1979
Volkswagen	306			Eurovan		1993–1994
Volkswagen	159			Golf		1987
Volkswagen	80			Golf		1988
Volkswagen	92			Golf		1993
Volkswagen	73			Golf Rally		1988
Volkswagen	149			GTI (Canadian)		1991
Volkswagen	274			Jetta		1994–1996
Volkswagen	148			Passat 4 door Sedan		1992
Volkswagen		42		Scirocco		1986
Volkswagen	284			Transporter		1988—1989
Volkswagen	251			Transporter		1990
Volvo	43			262C		1981
Volvo	87			740 Sedan		1988
Volvo	286			850 Turbo		1995—1998
Volvo	95			940 GL		1993
Volvo	132			945 GL		1994
Volvo	176			960 Sedan & Wagon		1994
Volvo	335			S70		1998—2000
Yamaha MC	113			FJ1200		1991
Yamaha MC	360			R1		2000
Yamaha MC	171			RD–350		1983
Yamaha MC	301			Virago		1990—1998

[67 FR 59099, Sept. 19, 2002]

PART 594—SCHEDULE OF FEES AUTHORIZED BY 49 U.S.C. 30141

Sec.

594.1 Scope.
594.2 Purpose.
594.3 Applicability.
594.4 Definitions.
594.5 Establishment and payment of fees.
594.6 Annual fee for administration of the registration program.
594.7 Fee for filing petition for a determination whether a vehicle is eligible for importation.
594.8 Fee for importing a vehicle pursuant to a determination by the Administrator.
594.9 Fee for reimbursement of bond processing costs.
594.10 Fee for review and processing of conformity certificate.

AUTHORITY: 49 U.S.C. 30141, 31 U.S.C. 9701; delegation of authority at 49 CFR 1.50.

SOURCE: 54 FR 40107, Sept. 29, 1989, unless otherwise noted.

§ 594.1 Scope.

This part establishes the fees authorized by 49 U.S.C. 30141.

[61 FR 51045, Sept. 30, 1996]

§ 594.2 Purpose.

The purposes of this part is to ensure that NHTSA is reimbursed for costs incurred in administering the importer registration program, in making determinations whether a nonconforming vehicle is eligible for importation into the United States, and in processing the bond furnished to the Secretary of the Treasury given to ensure that an imported vehicle not originally manufactured to conform to all applicable Federal motor vehicle safety standards is brought into compliance with the safety standards, or will be exported, or abandoned to the United States.

§ 594.3 Applicability.

This part applies to any person who applies to NHTSA to be granted the status of Registered Importer under part 592 of this chapter, to any person

who has been granted such status, to any manufacturer not a Registered Importer who petitions the Administrator for a determination pursuant to part 593 of this chapter, and to any person who imports a motor vehicle into the United States pursuant to such determination.

[55 FR 40667, Oct. 4, 1990]

§ 594.4 Definitions.

All terms used in this part that are defined in 49 U.S.C. 30102 are used as defined in that section.

Administrator means the Administrator of the National Highway Traffic Safety Administration.

NHTSA means the National Highway Traffic Safety Administration.

Registered Importer means any person who has been granted the status of registered importer under part 592 of this chapter, and whose registration has not been revoked.

[54 FR 40107, Sept. 29, 1989, as amended at 61 FR 51045, Sept. 30, 1996]

§ 594.5 Establishment and payment of fees.

(a) The fees established by this part continue in effect until adjusted by the Administrator. The Administrator reviews the amount or rate of fees established under this part and, if appropriate, adjusts them by rule at least every 2 years.

(b) The fees applicable in any fiscal year are established before the beginning of such year. Each fee is calculated in accordance with this part, and is published in the FEDERAL REGISTER not later than September 30 of each year.

(c) An applicant for status as Registered Importer shall submit an initial annual fee with the application. A Registered Importer shall pay an annual fee not later than October 31 of each year. The fee is that specified in § 594.6(i).

(d) A person who petitions the Administrator for a determination that a vehicle is eligible for importation shall file with the petition the fee specified in § 594.7(e).

(e) A person who imports a vehicle covered by a determination of the Administrator shall pay the fee specified in either § 594.8 (b) or (c), as appropriate. Such fee shall be transmitted to the Administrator by the Registered Importer responsible for such vehicle at the time it furnishes a certificate of conformity pursuant to § 591.7(e) of this chapter.

(f) A fee for reimbursement for bond processing costs shall be filed with each certificate of conformity furnished the Administrator.

(g) A fee for the review and processing of a conformity certificate shall be submitted with each certificate of conformity furnished to the Administrator.

(h) No application or petition will be accepted for filing or processed before payment of the full amount specified. Except as provided in § 594.6(d), a fee shall be paid irrespective of NHTSA's disposition of the application, or of a withdrawal of an application.

(i) Fee payments shall be by check, draft, money order, or Electronic Funds Transfer System made payable to the Treasurer of the United States.

[54 FR 40107, Sept. 29, 1989, as amended at 55 FR 40667, Oct. 4, 1990; 62 FR 50882, Sept. 29, 1997]

§ 594.6 Annual fee for administration of the registration program.

(a) Each person filing an application to be granted the status of a Registered Importer pursuant to part 592 of this chapter on or after October 1, 2002, must pay an annual fee of $655, as calculated below, based upon the direct and indirect costs attributable to:

(1) Processing and acting upon such application;

(2) Any inspection deemed required for a determination upon such application;

(3) The estimated remaining activities of administering the registration program in the fiscal year in which such application is intended to become effective.

(b) That portion of the initial annual fee attributable to the processing of the application for applications filed on and after October 1, 2002, is $395. The sum of $395, representing this portion, shall not be refundable if the application is denied or withdrawn.

(c) If, in order to make a determination upon an application, NHTSA must

make an inspection of the applicant's facilities, NHTSA notifies the applicant in writing after the conclusion of any such inspection, that a supplement to the initial annual fee in a stated amount is due upon receipt of such notice to recover the direct and indirect costs associated with such inspection and notification, and that no determination will be made upon the application until such sum is received. Such sum is not refundable if the application is denied or withdrawn.

(d) That portion of the initial annual fee attributable to the remaining activities of administering the registration program on and after October 1, 2002, is set forth in paragraph (i) of this section. This portion shall be refundable if the application is denied, or withdrawn before final action upon it.

(e) Each Registered Importer who wishes to maintain the status of Registered Importer shall pay a regular annual fee based upon the direct and indirect costs of administering the registration program, including the suspension and reinstatement, and revocation of such registration.

(f) The elements of administering the registration program that are included in the regular annual fee are:

(1) Calculating, revising, and publishing the fees to apply in the next fiscal year, including such coordination as may be required with the U.S. Customs Service.

(2) Processing and reviewing the annual statement attesting to the fact that no material change has occurred in the Registered Importer's status since filing its original application.

(3) Processing the annual fee.

(4) Processing and reviewing any amendments to an annual statement received in the course of a fiscal year.

(5) Verifying through inspection or otherwise that a Registered Importer is complying with the requirements of Sec. 592.6(b)(3) of this chapter for recordkeeping.

(6) Verifying through inspection or otherwise that a Registered Importer is able technically and financially to carry out its responsibilities pursuant to 49 U.S.C. 30118 *et seq*.

(7) Invoking procedures for suspension of registration and its reinstatement, and for revocation of registration pursuant to Sec. 592.7 of this chapter.

(g) The direct costs included in establishing the annual fee for maintaining registered importer status are the estimated costs of professional and clerical staff time, computer and computer operator time, and postage, per Registered Importer. The direct costs included in establishing the annual fee for a specific Registered Importer are costs of transportation and *per diem* attributable to inspections conducted with respect to that Registered Importer in administering the registration program, which have not been included in a previous annual fee.

(h) The indirect costs included in establishing the annual fee for maintaining Registered Importer status are a pro rata allocation of the average salary and benefits of persons employed in processing annual statements, or changes thereto, in recommending continuation of Registered Importer status, and a pro rata allocation of the costs attributable to maintaining the office space, and the computer or word processor. This cost is $13.90 per man-hour for the period beginning October 1, 2000.

EDITORIAL NOTE: At 67 FR 60599, Sept. 26, 2002, § 594.6 was amended by revising paragraph (h). However, only the last sentence was revised.

(h) * * * This cost is $14.85 per man-hour for the period beginning October 1, 2002.

(i) Based upon the elements, and indirect costs of paragraphs (f), (g), and (h) of this section, the component of the initial annual fee attributable to administration of the registration program, covering the period beginning October 1, 2002, is $260. When added to the costs of registration of $395, as set forth in paragraph (b) of this section, the costs per applicant to be recovered through the annual fee are $655. The annual renewal registration fee for the period beginning October 1, 2002, is $455.

[54 FR 40107, Sept. 29, 1989; 55 FR 78, Jan. 2, 1990, as amended at 55 FR 40667, Oct. 4, 1990; 56 FR 49429, Sept. 30, 1991; 58 FR 51023, Sept. 30, 1993; 61 FR 51045, Sept. 30, 1996; 63 FR 45185, Aug. 25, 1998; 65 FR 56500, Sept. 19, 2000; 67 FR 60599, Sept. 26, 2002; 67 FR 62897, Oct. 9, 2002]

§ 594.7 Fee for filing petition for a determination whether a vehicle is eligible for importation.

(a) Each manufacturer or registered importer who petitions NHTSA for a determination that—

(1) A nonconforming vehicle is substantially similar to a vehicle originally manufactured for importation into and sale in the United States and of the same model year as the model for which petition is made, and is capable of being readily modified to conform to all applicable Federal motor vehicle safety standards, or

(2) A nonconforming vehicle has safety features that comply with or are capable of being modified to comply with all applicable Federal motor vehicle safety standards,

shall pay a fee based upon the direct and indirect costs of processing and acting upon such petition.

(b) The direct costs attributable to processing a petition filed pursuant to paragraph (a) of this section include the average cost per professional staff-hour, computer and computer operator time, and postage. The direct costs also include those attributable to any inspection of a vehicle requested by a petitioner in substantiation of its petition.

(c) The indirect costs attributable to processing and acting upon a petition filed pursuant to paragraph (a) of this section include a pro rata allocation of the average salary and benefits of persons employed in processing the petitions and recommending decisions on them, and a pro rata allocation of the costs attributable to maintaining the office space, and the computer or word processor.

(d) The direct costs attributable to acting upon a petition filed pursuant to paragraph (a) of this section, also include the cost of publishing a notice in the FEDERAL REGISTER seeking public comment, the cost of publishing a second notice with the agency's determination, and a pro rata share of the cost of publishing an annual list of nonconforming vehicles determined to be eligible for importation.

(e) For petitions filed on and after October 1, 2002, the fee payable for seeking a determination under paragraph (a)(1) of this section is $175. The fee payable for a petition seeking a determination under paragraph (a)(2) of this section is $800. If the petitioner requests an inspection of a vehicle, the sum of $550 shall be added to such fee. No portion of this fee is refundable if the petition is withdrawn or denied.

(f) In adopting a fee for the next fiscal year, the Administrator employs data based upon the cost of determinations and the amount of fees received for the 12-month period ending June 30 of the fiscal year preceding that fiscal year.

[54 FR 40107, Sept. 29, 1989, as amended at 55 FR 40667, Oct. 4, 1990; 56 FR 49429, Sept. 30, 1991; 58 FR 51023, Sept. 30, 1993; 61 FR 51045, Sept. 30, 1996; 65 FR 56500, Sept. 19, 2000; 67 FR 60599, Sept. 26, 2002]

§ 594.8 Fee for importing a vehicle pursuant to a determination by the Administrator.

(a) A fee as specified in paragraphs (b) and (c) of this section shall be paid by each importer of a vehicle covered by a determination made under part 593 of this chapter to cover the direct and indirect costs incurred by NHTSA in making such determinations.

(b) If a determination has been made pursuant to a petition, the fee for each vehicle is $125. The direct and indirect costs that determine the fee are those set forth in §§ 594.7(b), (c), and (d).

(c) If a determination has been made on or after October 1, 2002, pursuant to the Administrator's initiative, the fee for each vehicle is $125. The direct and indirect costs that determine the fee are those set forth in §§ 594.7(b), (c), and (d), and references to ''petition'' shall be understood as relating to NHTSA's documents that serve as a basis for initiating determinations on its own initiative.

[55 FR 40667, Oct. 4, 1990, as amended at 58 FR 51023, Sept. 30, 1993; 61 FR 51045, Sept. 30, 1996; 63 FR 45186, Aug. 25, 1998; 65 FR 56500, Sept. 19, 2000; 67 FR 60599, Sept. 26, 2002]

§ 594.9 Fee for reimbursement of bond processing costs.

(a) Each registered importer shall pay a fee based upon the direct and indirect costs of processing each bond furnished to the Secretary of the Treasury with respect to each vehicle for which it furnishes a certificate of

conformity to the Administrator pursuant to § 591.7(e) of this chapter.

(b) The direct and indirect costs attributable to processing a bond are provided to NHTSA by the U.S. Customs Service.

(c) The bond processing fee for each vehicle imported on and after October 1, 2002, for which a certificate of conformity is furnished, is $6.20.

[54 FR 40107, Sept. 29, 1989, as amended at 56 FR 49429, Sept. 30, 1991; 58 FR 51023, Sept. 30, 1993; 61 FR 51045, Sept. 30, 1996; 63 FR 45186, Aug. 25, 1998; 65 FR 56500, Sept. 19, 2000; 67 FR 60599, Sept. 26, 2002]

§ 594.10 Fee for review and processing of conformity certificate.

(a) Each registered importer shall pay a fee based on the agency's direct and indirect costs for the review and processing of each certificate of conformity furnished to the Administrator pursuant to § 591.7(e) of this chapter.

(b) The direct costs attributable to the review and processing of a certificate of conformity include the estimated cost of contract and professional staff time, computer usage, and record assembly, marking, shipment and storage costs.

(c) The indirect costs attributable to the review and processing of a certificate of conformity include a pro rata allocation of the average benefits of persons employed in reviewing and processing the certificates, and a pro rata allocation of the costs attributable to the rental and maintenance of office space and equipment, the use of office supplies, and other overhead items.

(d) The review and processing fee for each certificate of conformity submitted on and after October 1, 2002 is $18. However, if the vehicle covered by the certificate has been entered electronically with the U.S. Customs Service through the Automated Broker Interface and the registered importer submitting the certificate has an e-mail address, the fee for the certificate is $6, provided that the fee is paid by a credit card issued to the registered importer. If NHTSA finds that the information in the entry or the certificate is incorrect, requiring further processing, the processing fee shall be $18. However, if the importer electronically corrects the incorrect information, the processing fee shall be $12 rather than $18.

[62 FR 50882, Sept. 29, 1997, as amended at 63 FR 45186, Aug. 25, 1998; 65 FR 56500, Sept. 19, 2000; 67 FR 60599, Sept. 26, 2002]

PART 595—RETROFIT ON-OFF SWITCHES FOR AIR BAGS

Subpart A—General

Sec.
595.1 Scope.
595.2 Purpose.
595.3 Applicability.
595.4 Definitions.

Subpart B—Retrofit On-Off Switches for Air Bags

595.5 Requirements.

Subpart C—Vehicle Modifications to Accommodate People With Disabilities

595.6 Modifier identification.
595.7 Requirements for vehicle modifications to accommodate people with disabilities.
APPENDIX A TO PART 595—INFORMATION BROCHURE.
APPENDIX B TO PART 595—REQUEST FORM.
APPENDIX C TO PART 595—INSTALLATION OF AIR BAG ON-OFF SWITCHES.

AUTHORITY: 49 U.S.C. 322, 30111, 30115, 30117, 30122 and 30166; delegation of authority at 49 CFR 1.50.

SOURCE: 62 FR 62442, Nov. 21, 1997, unless otherwise noted.

Subpart A—General

§ 595.1 Scope.

This part establishes conditions under which the compliance of motor vehicles and motor vehicle equipment with the Federal motor vehicle safety standards may be made inoperative.

[66 FR 12655, Feb. 27, 2001]

§ 595.2 Purpose.

The purpose of this part is to provide an exemption from the ''make inoperative'' provision of 49 U.S.C. 30122 that permits motor vehicle dealers and motor vehicle repair businesses to install retrofit air bag on-off switches and to otherwise modify motor vehicles

to enable people with disabilities to operate or ride as a passenger in a motor vehicle.

[66 FR 12655, Feb. 27, 2001]

§ 595.3 Applicability.

This part applies to dealers and motor vehicle repair businesses.

§ 595.4 Definitions.

The term *dealer*, defined in 49 U.S.C. 30102(a), is used in accordance with its statutory meaning.

The term *motor vehicle repair business* is defined in 49 U.S.C. 30122(a) as ''a person holding itself out to the public to repair for compensation a motor vehicle or motor vehicle equipment.'' This term includes businesses that receive compensation for servicing vehicles without malfunctioning or broken parts or systems by adding or removing features or components to or from those vehicles or otherwise customizing those vehicles.

Subpart B—Retrofit On-Off Switches for Air Bags

§ 595.5 Requirements.

(a) Beginning January 19, 1998, a dealer or motor vehicle repair business may modify a motor vehicle manufactured before September 1, 2012 by installing an on-off switch that allows an occupant of the vehicle to turn off an air bag in that vehicle, subject to the conditions in paragraphs (b)(1) through (5) of this section.

(b)(1) The dealer or motor vehicle repair business receives from the owner or lessee of the motor vehicle a letter from the National Highway Traffic Safety Administration that authorizes the installation of an on-off switch in that vehicle for that air bag and includes a form to be filled in by the dealer or motor vehicle repair business with information identifying itself and describing the installation it makes.

(2) The dealer or motor vehicle repair business installs the on-off switch in accordance with the instructions of the manufacturer of the switch.

(3) The on-off switch meets all of the conditions specified in paragraphs (b)(3)(i) and (ii) of this section.

(i) The on-off switch is operable solely by a key or a key-like object. The on-off switch shall be separate from the ignition switch for the vehicle, so that the driver must take some action other than inserting the ignition key or turning the ignition key in the ignition switch to turn off the air bag. Once turned off, the air bag shall remain off until it is turned back on by means of the device. If a single on-off switch is installed for both air bags, the on-off switch shall allow each air bag to be turned off without turning off the other air bag. The readiness indicator required by S4.5.2 of § 571.208 of this chapter shall continue to monitor the readiness of the air bags even when one or both air bags has been turned off. The readiness indicator light shall not be illuminated solely because an air bag has been deactivated by means of an on-off switch.

(ii) A telltale light in the interior of the vehicle shall be illuminated whenever the driver or passenger air bag is turned off by means of the on-off switch. The telltale for a driver air bag shall be clearly visible to an occupant of the driver's seating position. The telltale for a passenger air bag shall be clearly visible to occupants of all front seating positions. The telltale for an air bag:

(A) Shall be yellow;

(B) Shall have the identifying words ''DRIVER AIR BAG OFF'' or ''PASSENGER AIR BAG OFF,'' as appropriate, on the telltale or within 25 millimeters of the telltale;

(C) Shall remain illuminated for the entire time that the air bag is ''off;''

(D) Shall not be illuminated at any time when the air bag is ''on;'' and,

(E) Shall not be combined with the readiness indicator required by S4.5.2 of § 571.208 of this chapter.

(4) The dealer or motor vehicle repair business provides the owner or lessee with an insert for the vehicle owner's manual that—

(i) Describes the operation of the on-off switch,

(ii) Lists the risk groups on the request form set forth in Appendix B of this Part,

(iii) States that an on-off switch should only be used to turn off an air

bag for a member of one of those risk groups, and

(iv) States the safety consequences for using the on-off switch to turn off an air bag for persons who are not members of any of those risk groups. The description of those consequences includes information, specific to the make, model and model year of the owner's or lessee's vehicle, about any seat belt energy managing features, e.g., load limiters, that will affect seat belt performance when the air bag is turned off.

(5) In the form included in the agency authorization letter specified in paragraph (b)(1) of this section, the dealer or motor vehicle repair business fills in information describing itself and the on-off switch installation(s) it makes in the motor vehicle. The dealer or motor vehicle repair business then sends the form to the address below within 7 working days after the completion of the described installations: National Highway Traffic Safety Administration, Attention: Air Bag Switch Request Forms, 400 Seventh Street, S.W., Washington, D.C. 20590–1000.

[62 FR 62442, Nov. 21, 1997; 62 FR 67754, Dec. 30, 1997, as amended at 65 FR 30770, May 12, 2000]

Subpart C—Vehicle Modifications To Accommodate People With Disabilities

SOURCE: 66 FR 12655, Feb. 27, 2001, unless otherwise noted.

§ 595.6 Modifier identification.

(a) Any motor vehicle repair business that modifies a motor vehicle to enable a person with a disability to operate, or ride as a passenger in, the motor vehicle and intends to avail itself of the exemption provided in 49 CFR 595.7 shall furnish the information specified in paragraphs (a)(1) through (3) of this section to: Administrator, National Highway Traffic Safety Administration, 400 Seventh Street, SW., Washington, DC 20590.

(1) Full individual, partnership, or corporate name of the motor vehicle repair business.

(2) Residence address of the motor vehicle repair business and State of incorporation if applicable.

(3) A statement that the motor vehicle repair business modifies a motor vehicle to enable a person with a disability to operate, or ride as a passenger in, the motor vehicle and intends to avail itself of the exemption provided in 49 CFR 595.7.

(b) Each motor business repair business required to submit information under paragraph (a) of this section shall submit the information not later than August 27, 2001. After that date, each motor business repair business that modifies a motor vehicle to enable a person with a disability to operate, or ride as a passenger in, the motor vehicle and intends to avail itself of the exemption provided in 49 CFR 595.7 shall submit the information required under paragraph (a) not later than 30 days after it first modifies a motor vehicle to enable a person with a disability to operate, or ride as a passenger in, the motor vehicle. Each motor vehicle repair business who has submitted required information shall keep its entry current, accurate and complete by submitting revised information not later than 30 days after the relevant changes in the business occur.

§ 595.7 Requirements for vehicle modifications to accommodate people with disabilities.

(a) Any motor vehicle repair business that modifies a motor vehicle to enable a person with a disability to operate, or ride as a passenger in, the motor vehicle is exempted from the ''make inoperative'' prohibition of 49 U.S.C. 30122 to the extent that those modifications affect the motor vehicle's compliance with the Federal motor vehicle safety standards or portions thereof specified in paragraph (c) of this section. Modifications that would take a vehicle out of compliance with any other Federal motor vehicle safety standards, or portions thereof, are not covered by this exemption.

(b) Any motor vehicle repair business that modifies a motor vehicle to enable a person with a disability to operate,

or ride as a passenger in, the motor vehicle in such a manner as to make inoperative any part of a device or element of design installed on or in the motor vehicle in compliance with a Federal motor vehicle safety standard or portion thereof specified in paragraph (c) of this section must affix to the motor vehicle a permanent label of the type and in the manner described in paragraph (d) of this section and must provide and retain a document of the type and in the manner described in paragraph (e) of this section.

(c)(1) 49 CFR 571.101, except for S5.2 (a), S5.3.1, S5.3.2, and S5.3.5 of that section.

(2) S5.1.1.5 of 49 CFR 571.108, in the case of a motor vehicle that is modified to be driven without a steering wheel or for which it is not feasible to retain the turn signal canceling device installed by the vehicle manufacturer.

(3) S4.4 and S4.5 of 49 CFR 571.114, in any case in which the original key-locking system must be modified.

(4) S4(a) of 49 CFR 571.118, in any case in which the medical condition of the person for whom the vehicle is modified necessitates the installation of a remote ignition switch to start the vehicle.

(5) S5.1 and S5.2.1 of 49 CFR 571.123, in any case in which the modification necessitates the relocation of original equipment manufacturer's controls.

(6) S5.3.1 of 49 CFR 571.135, in any case in which the modification necessitates the removal of the original equipment manufacturer foot pedal.

(7) 49 CFR 571.201 with respect to:

(i) Targets located on the right side rail, the right B-pillar and the first right side ''other'' pillar adjacent to the stowed platform of a lift or ramp that stows vertically, inside the vehicle.

(ii) Targets located on the left side rail, the left B-pillar and the first left side ''other'' pillar adjacent to the stowed platform of a lift or ramp that stows vertically, inside the vehicle.

(iii) Targets located on the rear header and the rearmost pillars adjacent to the stowed platform of a lift or ramp that stows vertically, inside the vehicle.

(8) 49 CFR 571.202, in any case in which:

(i) A motor vehicle is modified to be operated by a driver seated in a wheelchair and no other seat is supplied with the vehicle for the driver;

(ii) A motor vehicle is modified to transport a right front passenger seated in a wheelchair and no other right front passenger seat is supplied with the vehicle; or

(9) S3(b)(1) and (b)(2) of 49 CFR 571.202, in any case in which the driver's head restraint must be modified to accommodate a driver with a disability.

(10) S5.1 of 49 CFR 571.203, in any case in which the modification necessitates a structural change to, or removal of, the original equipment manufacturer steering shaft.

(11) S5.2 of 49 CFR 571.203, in any case in which an item of adaptive equipment must be mounted on the steering wheel.

(12) 49 CFR 571.204, in any case in which the modification necessitates a structural change to, or removal of, the original equipment manufacturer steering shaft.

(13) S4.1 of 49 CFR 571.207, in any case in which a vehicle is modified to be driven by a person seated in a wheelchair and no other driver's seat is supplied with the vehicle, provided that a wheelchair securement device is installed at the driver's position.

(14) S4.1.5.1(a)(1), S4.1.5.1(a)(3), S4.2.6.2, S5, S7.1, S7.2 and S7.4 of 49 CFR 571.208 for the designated seating position modified, provided Type 2 or 2A seat belts meeting the requirements of 571.209 and 571.210 of this chapter are installed at that position.

(15) S5 of 49 CFR 571.214 for the designated seating position modified, in any cases in which the restraint system and/or seat at that position must be changed to accommodate a person with a disability.

(d) The label required by paragraph (b) of this section shall:

(1) Be permanently affixed to the vehicle,

(2) Be located adjacent to the original certification label or the alterer's certification label, if applicable,

(3) Give the modifier's name and physical address,

(4) Contain the statement ''This vehicle has been modified in accordance

with 49 CFR 595.6 and may no longer comply with all Federal Motor Vehicle Safety Standards in effect at the time of its original manufacture.''

(e) The document required by paragraph (b) of this section shall:

(1) Be provided, in original or photocopied form, to the owner of the vehicle at the time the vehicle is delivered to the owner,

(2) Be kept, in original or photocopied form, at the same address provided on the label described in paragraph (c) of this section for a period not less than five years after the vehicle, as modified, is delivered to the individual for whom the modifications were performed,

(3) Be clearly identifiable as to the vehicle that has been modified,

(4) Contain a list of the Federal motor vehicle safety standards or portions thereof specified in paragraph (c) of this section with which the vehicle may no longer be in compliance.

(5) Indicate any reduction in the load carrying capacity of the vehicle of more than 100 kg (220 lb) after the modifications are completed. In providing this information, the modifier must state whether the weight of a user's wheelchair is included in the available load capacity.

APPENDIX A TO PART 595--INFORMATION BROCHURE

U. S. DEPARTMENT OF TRANSPORTATION
NATIONAL HIGHWAY TRAFFIC SAFETY ADMINISTRATION

AIR BAGS AND ON-OFF SWITCHES
INFORMATION FOR AN INFORMED DECISION

Keeping the Benefits for the Many
and
Reducing the Risks for the Few

INTRODUCTION

Air bags are proven, effective safety devices. From their introduction in the late 1980's through November 1, 1997, air bags saved about 2,620 people. The number of people saved increases each year as air bags become more common on America's roads.

However, the number of lives saved is not the whole story. Air bags are particularly effective in preventing life-threatening and debilitating head and chest injuries. A study of real-world crashes conducted by the National Highway Traffic Safety Administration (NHTSA) found that the combination of seat belts and air bags is 75 percent effective in preventing serious head injuries and 66 percent effective in preventing serious chest injuries. That means 75 of every 100 people who would have suffered a serious head injury in a crash, and 66 out of 100 people who would have suffered chest injuries, were spared that fate because they wore seat belts and had air bags.

For some people, these life saving and injury-preventing benefits come at the cost of a less severe injury caused by the air bag itself. Most air bag injuries are minor cuts, bruises, or abrasions and are far less serious than the skull fractures and brain injuries that air bags prevent. However, 87 people have been killed by air bags as of November 1, 1997. These deaths are tragic, but rare events -- there have been about 1,800,000 air bag deployments as of that same date.

The one fact that is common to all who died is NOT their height, weight, sex, or age. Rather, it is the fact that they were too close to the air bag when it started to deploy. For some, this occurred because they were sitting too close to the air bag. More often this occurred because they were not restrained by seat belts or child safety seats and were thrown forward during pre-crash braking.

The vast majority of people can avoid being too close and can minimize the risk of serious air bag injury by making simple changes in behavior. Shorter drivers can adjust their seating position. Front seat adult passengers can sit a safe distance from their air bag. Infants and children 12 and under should sit in the back seat. And everyone can buckle up. The limited number of people who may not be able to make these changes may benefit from having the opportunity to turn off their air bags when necessary.

Beginning January 19, 1998, consumers can choose to have an on-off switch installed for the air bags in their vehicle if they are, or a user of their vehicle is, in a risk group listed below. The following information provides the facts you need about air bags so you can make the appropriate decision for you and anyone else who is in a risk group.

What is an on-off switch?
An on-off switch allows an air bag to be turned on and off. The on-off switch can be installed for the driver, passenger, or both. To limit misuse, a key must be used to operate the on-off switch. When the air bag is turned off, a light comes on. There is a message on or near the light saying "DRIVER AIR BAG OFF" or "PASSENGER AIR BAG OFF." The air bag will remain off until the key is used to turn it back on.

What steps can you take to reduce air bag risk without buying an on-off switch?

- **Always place an infant in a rear-facing infant seat in the back seat.**
- **Always transport children 1 to 12 years old in the back seat and use appropriate child restraints.**
- **Always buckle your seat belt.**
- **Keep 10 inches between the center of the air bag cover and your breastbone.**

The vast majority of people don't need an on-off switch. Almost everyone over age 12 is much safer with air bags than without them. This includes short people, tall people, older people, pregnant women -- in fact, all people, male or female, who buckle their seat belts and who can sit far enough back from their air bag. Ideally, you should sit with at least 10 inches between the center of your breastbone and the cover of your air bag. The nearer you can come to achieving the 10-inch distance, the lower your risk of being injured by the air bag and the higher your chance of being saved by the air bag. If you can get back almost 10 inches, the air bag will still help you in a crash.

Who should consider installing an on-off switch?

- People who must transport infants riding in rear-facing infant seats in the front passenger seat.

- People who must transport children ages 1 to 12 in the front passenger seat.

- Drivers who cannot change their customary driving position and keep 10 inches between the center of the steering wheel and the center of their breastbone.

- People whose doctors say that, due to their medical condition, the air bag poses a special risk that outweighs the risk of hitting their head, neck or chest in a crash if the air bag is turned off.

If you cannot certify that you are, or any user of your vehicle is, in one of these groups, you are not eligible for an on-off switch. Turning off your air bag will not benefit you or the other users of your vehicle. Instead, it will increase the risk that you and the other users will suffer a head, neck or chest injury by violently striking the steering wheel or dashboard in a moderate to severe

crash.

WHY SOME PEOPLE ARE AT RISK

How do air bag deaths occur?
Air bags are designed to save lives and prevent injuries by cushioning occupants as they move forward in a front-end crash. By providing a cushion, an air bag keeps the occupant's head, neck, and chest from hitting the steering wheel or dashboard. To perform well, an air bag must deploy quickly. The force is greatest in the first 2-3 inches after the air bag bursts through its cover and begins to inflate. Those 2-3 inches are the "risk zone." The force decreases as the air bag inflates farther.

Occupants who are very close to or on top of the air bag when it begins to inflate can be hit with enough force to suffer serious injury or death. However, occupants who are properly restrained and sit 10 inches away from the air bag cover will contact the air bag only after it has completely or almost completely inflated. The air bag then will cushion and protect them from hitting the hard surfaces in the vehicle.

Do both children and adults face risk?
Yes, both children and adults face the risk of air bag injury or death if they are positioned too close to the air bag or fail to use proper restraints. As of November 1, 1997, NHTSA has confirmed that 49 young children have died, all on the passenger side. 38 adults have died -- 35 drivers and 3 passengers.

What were the specific circumstances of the children's deaths?
Almost all of the 49 children who died were improperly restrained or positioned. 12 were infants under age 1 who were riding in rear-facing infant seats in front of the passenger air bag. When placed in the front seat, a rear-facing infant seat places an infant's head within a very few inches of the passenger air bag. In this position, an infant is almost certain to be injured if the air bag deploys. Rear-facing infant seats must ALWAYS be placed in the back seat.

The other 37 children ranged in age from 1 to 9 years; most were 7 or under. 29 of them were totally unrestrained. This includes 4 children who were sitting on the laps of other occupants. The remaining 8 children included some who were riding with their shoulder belts behind them and some who were wearing lap and shoulder belts but who also should have been in booster seats because of their small size and weight. Booster seat use could have improved shoulder belt fit and performance. These various factors allowed the 37 children to get too close to the air bag when it began to inflate.

What were the specific circumstances of the adults' deaths?
Most of the adults who were killed by air bags were not properly restrained. 18 of the 35 drivers, and 2 of the 3 passengers, were totally unbelted. 2 of the drivers who were belted had medical conditions which caused them to slump over the steering wheel immediately before the crash. A few of the drivers did not use their seat belts correctly and the others are believed to have been sitting too close to the steering wheel.

SEE FOR YOURSELF
Visit the NHTSA Web site at **http://www.nhtsa.dot.gov** and click on the icon "AIR BAGS - Information about air bags." A video shows crash tests of properly belted dummies whose air bags are turned off. A properly belted short female dummy without an air bag is shown slamming her head hard enough to bend the steering wheel and suffer fatal injuries. For more information, call the NHTSA Hotline at 1-800-424-9393.

REDUCING THE RISK

What is the safest way to ride in front of an air bag?
First, move the seat back and buckle up -- every time, every trip. The lap belt needs to fit over your hips, not your abdomen, and the shoulder belt should lie on your chest and over your shoulder. Remove any slack from the belt. In a crash, seat belts stretch and slow down your movement toward the steering wheel or dashboard. Moving back and properly using seat belts give the air bag a chance to inflate before you move forward in a crash far enough to contact the air bag.

How do I best protect children?
Never place a rear-facing infant seat in the front seat if the air bag is turned on. Always secure a rear-facing seat in the back seat. Children age 12 and under should ride in the back seat. While almost all of the children killed by an air bag were 7 years old or younger, a few older children have been killed. Accordingly, age 12 is recommended to provide a margin of safety.

There are instances when children must sit in the front because the vehicle has no rear seat, there are too many children for all to ride in back, or a child has a medical condition that requires monitoring. If children must sit in the front seat, they should use the seat belts and/or child restraint appropriate for their weight or size (see the table at the end of this brochure) and sit against the back of the vehicle seat. The vehicle seat should be moved as far back from the air bag as practical. Make sure the child's shoulder belt stays on. If adult seat belts do not fit properly, use a booster seat. Also, children must never ride on the laps of others.

What should teenagers and adults do to be safest on the passenger side?
Always wear seat belts. This reduces the distance that they can move forward during a crash. Move the seat toward the rear. The distance between a passenger's chest and the dashboard where the air bag is stored is usually more than 10 inches, even with the passenger seat all the way forward. But more distance is safer.

How do I stay safe when I'm driving?
Since the risk zone for driver air bags is the first 2-3 inches of inflation, placing yourself 10 inches from your driver air bag provides you with a clear margin of safety. This distance is measured from the center of the steering wheel to your breastbone. If you now sit less than 10 inches away, you can change your driving position in several ways:

- Move your seat to the rear as far as you can while still reaching the pedals comfortably.

- Slightly recline the back of the seat. Although vehicle designs vary, many drivers can achieve the 10-inch distance, even with the driver seat all the way forward, simply by reclining the back of the seat somewhat. If reclining the back of your seat makes it hard to see the road, raise yourself by using a firm, non-slippery cushion, or raise the seat if your vehicle has that feature.
- If your steering wheel is adjustable, tilt it downward. This points the air bag toward your chest instead of your head and neck.

[In its published version, the brochure will be 10 inches tall and will indicate that it should be placed between your breastbone and the center of the air bag cover to check your distance.]

Will following these safety tips guarantee that I will be safe in a crash?
There is no guarantee of safety in a crash, with or without an air bag. However, most of the people killed by air bags would not have been seriously injured if they had followed these safety tips.

Are air bags the reason the back seat is the safest place for children?
No. The back seat has always been safer, even before there were air bags. NHTSA conducted a study of children who died in crashes in the front and back seats of vehicles, very few of which had passenger air bags. The study concluded that placing children in the back reduces the risk of death in a crash by 27 percent, whether or not a child is restrained.

THE ON-OFF SWITCH DECISION

Vehicle owners and lessees can obtain an on-off switch for one or both of their air bags only if they can certify that they are, or a user of their vehicle is, in one of the four risk groups listed below:

Two risk groups have a high enough risk that they would definitely be better off with an on-off switch:

- **Infants in rear-facing infant seats**. A rear-facing infant seat must never be placed in the front seat unless the air bag is turned off.
- **Drivers or passengers with unusual medical conditions.** These are people who have been advised by a physician that an air bag poses a special risk to them because of their condition. However, they should not turn off their air bag unless their physician also has advised them that this risk is greater than what may happen if they do turn off their air bag. Without an air bag, even belted occupants could hit their head, neck or chest in a crash.

  A national conference of physicians considered all medical conditions commonly cited as possible justifications for turning off air bags. The physicians did not recommend turning off air bags for persons with pacemakers, supplemental oxygen, eyeglasses, median sternotomy, angina, chronic obstructive pulmonary disease, emphysema, asthma, breast reconstruction, mastectomy, scoliosis (if the person can be positioned properly), previous back or neck surgery, previous facial reconstructive surgery or facial injury, hyperacusis, tinnitus, advanced age,

osteogenesis imperfecta, osteoporosis & arthritis (if the person can sit at a safe distance from the air bag), previous ophthalmologic surgery, Down syndrome and atlantoaxial instability (if the person can reliably sit properly aligned), or pregnancy. The physicians recommended turning off an air bag if a safe sitting distance or position cannot be maintained by a driver because of scoliosis or achondroplasia or by a passenger because of scoliosis or Down syndrome and atlantoaxial instability. The physicians also noted that a passenger air bag might have to be turned off if an infant or child has a medical condition and must ride in front so that he or she can be monitored. To obtain a copy of the recommendations, call the NHTSA Hotline or see the NHTSA Web site.

Two other risk groups may be better off with an air bag on-off switch:

- **Children ages 1 to 12.** Children in this age group can be transported safely in the front seat if they are properly belted, they do not lean forward, and their seat is moved all the way back. The vast majority of all fatally injured children in this age range were completely unrestrained. But children sometimes sit or lean far forward and may slip out of their shoulder belts, putting themselves at risk. The simple act of leaning far forward to change the radio station can momentarily place even a belted child in danger. If a vehicle owner must transport a child in the front seat, the owner is eligible for an on-off switch for the passenger air bag. Since air bag performance differs from vehicle model to vehicle model, the vehicle owner may wish to consult the vehicle manufacturer for additional advice.

CAUTION: If you allow children to ride in the front seat while unrestrained or improperly restrained, and especially if you sit with a child on your lap, **you are putting them at serious risk, with or without an air bag**. Turning off the air bag is not the safe answer. It would eliminate air bag risk but not the likelihood that in a crash an unrestrained child would fly through the air and strike the dashboard or windshield, or be crushed by your body.

- **Drivers who cannot get back 10 inches**. Very few drivers are unable to sit so that their breastbone is 10 inches away from their air bag. If, despite your best efforts, you cannot maintain a distance of 10 inches, you may wish to **consult your dealer or vehicle manufacturer for advice or modifications to help you move back.**

  Since the risk zone is the first 2-3 inches from the air bag cover, sitting back 10 inches provides a clear margin of safety. While getting back at least 10 inches is desirable, if you can get back almost 10 inches, the air bag is unlikely to seriously injure you in a crash and you probably don't need an on-off switch. If you cannot get back almost 10 inches from the air bag cover, you may wish to consider an on-off switch. Since air bag performance differs among vehicle models, you may wish to consult your vehicle manufacturer for additional advice.

What if you are, or a user of your vehicle is, not in one of the listed risk groups?
You are not at risk and do not need an on-off switch. This includes short people, tall people, older people, pregnant women -- in fact, all people, male or female over age 12, who buckle their seat belts and who can sit with 10 inches from the center of their breastbone to where the air bag is stored. You will have the full benefit of your air bag and will minimize the risk of violently striking the steering wheel and dashboard in a moderate to severe crash.

How do I get an on-off switch?
If you are eligible, you must fill out a NHTSA request form. Forms are available at state motor vehicle offices and may be available at automobile dealers and repair shops. You may also get one by calling the NHTSA Hotline or visiting the NHTSA Web site. On the form, you must indicate which air bags you want equipped with an on-off switch, certify that you have read this information brochure, certify that you are, or a user of your vehicle is, a member of a risk group listed above, and identify the group. Then send this form to NHTSA. Upon approval of your request, the agency will send you a letter authorizing an automobile dealer or repair shop to install an on-off switch in your vehicle.

Should a pregnant woman get an on-off switch?
No, not unless she is a member of a risk group. Pregnant women should follow the same advice as other adults: buckle up and stay back from the air bag. The lap belt should be positioned low on the abdomen, below the fetus, with the shoulder belt worn normally. Pull any slack out of the belt. Just as for everyone else, the greatest danger to a pregnant woman comes from slamming her head, neck or chest on the steering wheel in a crash. When crashes occur, the fetus can be injured by striking the lower rim of the steering wheel or from crash forces concentrated in the area where a seat belt crosses the mother's abdomen. By helping to restrain the upper chest, the seat belt will keep a pregnant woman as far as possible from the steering wheel. The air bag will spread out the crash forces that would otherwise be concentrated by the seat belt.

ON-OFF SWITCH PRECAUTIONS

If I turn off my air bag for someone at risk, what precautions should I take for others?
Since the air bag will not automatically turn itself back on after you turn it off with an on-off switch, you must remember to turn it on when someone who is not at risk is sitting in that seat. Every on-off switch has a light to remind you when the air bag is turned off.

If I turn off my air bag, will my seat belts provide enough protection?
Air bags increase the protection you can get from seat belts alone. If the air bag is turned off, you lose this extra protection.

In some newer vehicles, turning off your air bag may have additional consequences. These vehicles have seat belts that were specially designed to work together with air bags. If the crash forces become too great, these new seat belts "give" or yield to avoid concentrating too much force on your chest. The air bag prevents you from moving too far forward after the seat belts

give. Without the air bag to cushion this forward movement, the chance of the occupant hitting the vehicle interior is increased.

Ask your vehicle manufacturer whether your seat belts were specially designed to work with an air bag. If they were, your dealer or repair shop will provide you information about the effects that turning off your air bag will have on the performance of the belts. Ask your dealer or repair shop to show you this information before you decide whether to have an on-off switch installed.

HOW AIR BAGS WORK

Air bags are designed to keep your head, neck, and chest from slamming into the dash, steering wheel or windshield in a front-end crash. They are not designed to inflate in rear-end or rollover crashes or in most side crashes. Generally, air bags are designed to deploy in crashes that are equivalent to a vehicle crashing into a solid wall at 8-14 mph. Air bags most often deploy when a vehicle collides with another vehicle or with a solid object like a tree.

Air bags inflate when a sensor detects a front-end crash. The sensor sends an electric signal to start a chemical reaction that inflates the air bag with harmless nitrogen gas. All this happens faster than the blink of an eye. Air bags have vents, so they deflate immediately after cushioning you. They cannot smother you and they don't restrict your movement. The "smoke" you may have seen in a vehicle after an air bag demonstration is the nontoxic starch or talc that is used to lubricate the air bag.

Are all air bags the same?
No. Air bags differ in design and performance. There are differences in the crash speeds that trigger air bag deployment, the speed and force of deployment, the size and shape of air bags, and the manner in which they unfold and inflate. That is why you should contact your vehicle manufacturer if you want specific information about the air bags in your particular car or truck.

FUTURE AIR BAGS

Do I need an on-off switch if I buy a vehicle with depowered air bags?
Many manufacturers are installing depowered air bags beginning with their model year 1998 vehicles. They are called "depowered" because they deploy with less force than current air bags. They will reduce the risk of air bag-related injuries. However, even with depowered air bags, rear-facing child seats still should never be placed in the front seat and children are still safest in the back seat. Contact your vehicle manufacturer for further information.

Will on-off switches be necessary in the future?
Manufacturers are actively developing so-called "smart" or "advanced" air bags that may be able to tailor deployment based on crash severity, occupant size and position, or seat belt use. These bags should eliminate the risks produced by current air bag designs. It is likely that vehicle manufacturers will introduce some form of advanced air bags over the next few years.

WHAT RESTRAINT IS RIGHT FOR YOUR CHILD?

Weight or size of your child	**Proper type of restraint** (Put your child in back seat, if possible)
Children less than 20 pounds,* or less than 1 year	Rear-facing infant seat *(secured to the vehicle by the seat belts)*
Children from about 20 to 40 pounds* and at least 1 year	Forward-facing child seat *(secured to the vehicle by the seat belts)*
Children more than 40 pounds*	Booster seat, plus both portions of a lap/shoulder belt *(except only the lap portion is used with some booster seats equipped with front shield)*
Children who meet both criteria below: (1) Their sitting height is high enough so that they can, without the aid of a booster seat: wear the shoulder belt comfortably across their shoulder, and secure the lap belt across their pelvis, and (2) Their legs are long enough to bend over the front of the seat when their backs are against the vehicle seat back	Both portions of a lap/shoulder belt

* To determine whether a particular restraint is appropriate for your child, see restraint manufacturer's recommendations concerning the weight of children who may safely use the restraint.

APPENDIX B TO PART 595--REQUEST FORM

U. S. DEPARTMENT OF TRANSPORTATION
NATIONAL HIGHWAY TRAFFIC SAFETY ADMINISTRATION

OMB No. 2127-0588
Expiration Date: 11/30/00

REQUEST FOR AIR BAG ON-OFF SWITCH

Vehicle Owner or Lessee Instructions:
Read the National Highway Traffic Safety Administration (NHTSA) information brochure, "Air Bags & On-Off Switches, Information for an Informed Decision." If you want authorization for an on-off switch for your driver air bag, passenger air bag, or both, fill out Parts A, B, E and F completely, fill out Parts C and D as appropriate, and send this form to:

National Highway Traffic Safety Administration
Attention: Air Bag Switch Request Forms
400 Seventh Street, S. W.
Washington, D.C. 20590-1000

- Please print.
- Please note: Incomplete forms will be returned to the owner or lessee.
- If you need a copy of the brochure or have any questions about how to fill out this form, call the NHTSA Hotline at 1-800-424-9393.

Part A. Name and address

(First) (Middle In.) (Last)

Residence: Street address	City	State	Zip Code

Part B. I own or lease the following vehicle: (Owners of multiple vehicles should consult the additional instructions at the end of this form.)

Make	Model
Model year	Vehicle Identification Number (located on driver's side of dashboard near windshield and on certification label on driver's door frame)

Part C. Switch for Driver Air Bag. **I request authorization for the installation of an on-off switch for the driver air bag in my vehicle. I certify that I or another driver of my vehicle meets the criteria for the risk group checked below.** **(At least one box must be checked.)**	
☐	**Medical condition.** The driver has a medical condition which, according to his or her physician: • causes the driver air bag to pose a special risk for the driver; and • makes the potential harm from the driver air bag in a crash greater than the potential harm from turning off the air bag and allowing the driver, even if belted, to hit the steering wheel or windshield in a crash.
☐	**Distance from driver air bag.** Despite taking all reasonable steps to move back from the driver air bag, the driver is not able to maintain a 10-inch distance from the center of his or her breastbone to the center of the driver air bag cover.

Part D. Switch for Passenger Air Bag. **I request authorization for the installation of an on-off switch for the passenger air bag in my vehicle. I certify that I or another passenger of my vehicle meets the criteria for the risk group checked below.** **(At least one box must be checked.)**	
☐	**Infant.** An infant (less than 1 year old) must ride in the front seat because: • my vehicle has no rear seat; • my vehicle has a rear seat too small to accommodate a rear-facing infant seat; or • the infant has a medical condition which, according to the infant's physician, makes it necessary for the infant to ride in the front seat so that the driver can constantly monitor the child's condition.
☐	**Child age 1 to 12.** A child age 1 to 12 must ride in the front seat because: • my vehicle has no rear seat; • although children ages 1 to 12 ride in the rear seat(s) whenever possible, children ages 1 to 12 sometimes must ride in the front because no space is available in the rear seat(s) of my vehicle; or • the child has a medical condition which, according to the child's physician, makes it necessary for the child to ride in the front seat so that the driver can constantly monitor the child's condition.
☐	**Medical condition.** A passenger has a medical condition which, according to his or her physician: • causes the passenger air bag to pose a special risk for the passenger; and • makes the potential harm from the passenger air bag in a crash greater than the potential harm from turning off the air bag and allowing the passenger, even if belted, to hit the dashboard or windshield in a crash.

Part E. I make this request based on following certification and understandings:	
(Check each box below after reading carefully.)	
☐	**Information brochure.** I certify that I have read the NHTSA information brochure, "Air Bags & On-Off Switches, Information for an Informed Decision." I understand that air bags should be turned off only for people at risk and turned back on for people not at risk.
☐	**Loss of air bag protection.** I understand that turning off an air bag may have serious safety consequences. When an air bag is off, even belted occupants may hit their head, neck or chest on the steering wheel, dashboard or windshield in a moderate to serious crash. That possibility may be increased in some newer vehicles with seat belts that are specially designed to work with the air bag. Those belts, which are designed to reduce the concentration of crash forces on any single part of the body, typically allow the occupant to move farther forward in a crash than older belts. Without the air bag to cushion this forward movement, the chance of the occupant hitting the vehicle interior is increased.
☐	**Waiver.** I understand that motor vehicle dealers and repair businesses may require me to sign a waiver of liability before they install an on-off switch.

Part F. Certification. **I certify to the U. S. Department of Transportation that the information, certifications and understandings given or indicated by me on this form are truthful, correct and complete to the best of my knowledge and belief. I recognize that the statements I have made on this form concern a matter within the jurisdiction of a department of the United States and that making a false, fictitious or fraudulent statement may render me subject to criminal prosecution under Title 18, United States Code, Section 1001.**	
Date	Signature of owner/lessee

Additional instructions and information for vehicle owners and lessees: An owner or lessee of multiple vehicles (e.g., a fleet owner) who wants an on-off switch for the same air bag (e.g., just the passenger air bag) in more than one vehicle and for the same reason does not need to submit a separate form for each vehicle. Instead, the owner or lessee may list the make, model, model year, and vehicle identification number for each of those vehicles and attach the list to a copy of this form. Each page of the list must be signed and dated by the owner or lessee. A list may also be attached to a single copy of this form if the owner or lessee wishes to request authorization for on-off switches for both air bags in multiple vehicles.

Please note that an agency may not conduct or sponsor, and a person is not required to respond to, a collection of information unless it displays a currently valid OMB control number. That number appears above.

APPENDIX C TO PART 595--INSTALLATION OF AIR BAG ON-OFF SWITCHES

INSTALLATION OF AIR BAG ON-OFF SWITCHES	OMB No. 2127-0588 Expiration Date: 11/30/00

(The form and instructions below will be included in agency letters sent to vehicle owners or lessees authorizing the installation of air bag on-off switches. Each letter will identify the owner or lessee and the vehicle for which installation is authorized.)

The vehicle dealer or repair business identified below made the following installations of on-off switch(es) for the air bags in the motor vehicle identified above:		
Name of motor vehicle dealer or repair business		
Street address		
City	State	Zip Code
On-off switch(es) were installed for the air bag(s) checked on this form:	**driver air bag** ☐	**passenger air bag** ☐
Date of installation	Signature of authorized representative of dealer or repair business	

Instructions for vehicle dealers and repair businesses: Within 7 days of your installation of an on-off switch in the vehicle identified above, you must complete this form and mail it to: National Highway Traffic Safety Administration, Attention: Air Bag Switch Installation Forms, 400 Seventh St., S. W., Washington, D.C. 20590-1000.

Note: An agency may not conduct or sponsor, and a person is not required to respond to, a collection of information unless it displays a currently valid OMB control number. That number appears above.

PART 596—CHILD RESTRAINT ANCHORAGE SYSTEM PHASE-IN REPORTING REQUIREMENTS

Sec.
596.1 Scope.
596.2 Purpose.
596.3 Applicability.
596.4 Definitions.
596.5 Response to inquiries.
596.6 Reporting requirements.
596.7 Records.
596.8 Petition to extend period to file report.

AUTHORITY: 49 U.S.C. 322, 30111, 30115, 30117, and 30166; delegation of authority at 49 CFR 1.50.

SOURCE: 64 FR 10847, Mar. 5, 1999, unless otherwise noted.

§ 596.1 Scope.

This part establishes requirements for manufacturers of passenger cars, and of trucks and multipurpose passenger vehicles with a gross vehicle weight rating (GVWR) of 3,855 kilograms (8,500 pounds) or less, and of buses with a GVWR of 4,536 kg (10,000 lb) or less, to submit a report, and maintain records related to the report, concerning the number of such vehicles that meet the requirements of Standard No. 225, *Child restraint anchorage systems* (49 CFR 571.225).

§ 596.2 Purpose.

The purpose of these reporting requirements is to assist the National Highway Traffic Safety Administration in determining whether a manufacturer has complied with Standard No. 225 (49 CFR 571.225).

§ 596.3 Applicability.

This part applies to manufacturers of passenger cars, and of trucks and multipurpose passenger vehicles with a gross vehicle weight rating (GVWR) of 3,855 kilograms (8,500 pounds) or less, and of buses with a GVWR of 4536 kg (10,000 lb) or less. However, this part does not apply to vehicles excluded by S5 of Standard No. 225 (49 CFR 571.225) from the requirements of that standard.

§ 596.4 Definitions.

(a) All terms defined in 49 U.S.C. 30102 are used in their statutory meaning.

(b) Bus, gross vehicle weight rating or GVWR, multipurpose passenger vehicle, passenger car, and truck are used as defined in 49 CFR 571.3.

(c) *Production year* means the 12-month period between September 1 of one year and August 31 of the following year, inclusive.

§ 596.5 Response to inquiries.

At anytime during the production years ending August 31, 2000, August 31, 2001, and August 31, 2002, each manufacturer shall, upon request from the Office of Vehicle Safety Compliance, provide information identifying the vehicles (by make, model and vehicle identification number) that have been certified as complying with Standard No. 225 (49 CFR 571.225). The manufacturer's designation of a vehicle as a certified vehicle is irrevocable.

§ 596.6 Reporting requirements.

(a) *General reporting requirements.* Within 60 days after the end of the production years ending August 31, 2000, August 31, 2001, and August 31, 2002, each manufacturer shall submit a report to the National Highway Traffic Safety Administration concerning its compliance with the child restraint anchorage system requirements of Standard No. 225 (49 CFR 571.225) for its passenger cars, trucks, buses, and multipurpose passenger vehicles produced in that year. Each report shall—

(1) Identify the manufacturer;

(2) State the full name, title, and address of the official responsible for preparing the report;

(3) Identify the production year being reported on;

(4) Contain a statement regarding whether or not the manufacturer complied with the child restraint anchorage system requirements of Standard No. 225 (49 CFR 571.225) for the period covered by the report and the basis for that statement;

(5) Provide the information specified in paragraph (b) of this section;

(6) Be written in the English language; and

(7) Be submitted to: Administrator, National Highway Traffic Safety Administration, 400 Seventh Street, S.W., Washington, DC 20590.

(b) *Report content.*

(1) *Basis for phase-in production goals.* Each manufacturer shall provide the number of passenger cars and trucks and multipurpose passenger vehicles with a gross vehicle weight rating (GVWR) of 3,855 kilograms (8,500 pounds) or less, and buses with a GVWR of 4,536 kg (10,000 lb) or less manufactured for sale in the United States for each of the three previous production years, or, at the manufacturer's option, for the current production year. A new manufacturer that has not previously manufactured these vehicles for sale in the United States shall report the number of such vehicles manufactured during the current production year.

(2) *Production.* Each manufacturer shall report for the production year for which the report is filed: the number of passenger cars and trucks and multipurpose passenger vehicles with a gross vehicle weight rating (GVWR) of 3,855 kilograms (8,500 pounds) or less, and buses with a GVWR of 4,536 kg (10,000 lb) or less, that meet Standard No. 225 (49 CFR 571.225).

(3) *Vehicles produced by more than one manufacturer.* Each manufacturer whose reporting of information is affected by one or more of the express written contracts permitted by S13.1.2(c) and S14.2.2 of Standard No. 225 (49 CFR 571.225) shall:

(i) Report the existence of each contract, including the names of all parties to the contract, and explain how the contract affects the report being submitted.

(ii) Report the actual number of vehicles covered by each contract.

§ 596.7 Records.

Each manufacturer shall maintain records of the Vehicle Identification Number for each vehicle for which information is reported under § 596.6(b)(2) until December 31, 2004.

§ 596.8 Petition to extend period to file report.

A manufacturer may petition for extension of time to submit a report under this Part. A petition will be granted only if the petitioner shows good cause for the extension and if the extension is consistent with the public interest. The petition must be received not later than 15 days before expiration of the time stated in § 596.6(a). The filing of a petition does not automatically extend the time for filing a report. The petition must be submitted to: Administrator, National Highway Traffic Safety Administration, 400 Seventh Street, S.W., Washington, D.C. 20590.

CHAPTER VI—FEDERAL TRANSIT ADMINISTRATION, DEPARTMENT OF TRANSPORTATION

EDITORIAL NOTE: Nomenclature changes to Chapter VI appear at 57 FR 13657, Apr. 17, 1992.

Part		*Page*
601	Organization, functions, and procedures	1039
604	Charter service	1043
605	School bus operations	1051
609	Transportation for elderly and handicapped persons	1058
611	Major capital investment projects	1060
613	Planning assistance and standards	1068
614	Transportation infrastructure management	1069
622	Environmental impact and related procedures	1069
624	Clean fuels formula grant program	1070
630	Uniform system of accounts and records and reporting system	1077
633	Project management oversight	1082
639	Capital leases	1085
640	Credit assistance for surface transportation projects	1089
655	Prevention of alcohol misuse and prohibited drug use in transit operations	1089
659	Rail fixed guideway systems; State safety oversight	1130
661	Buy America requirements—Surface Transportation Assistance Act of 1982, as amended	1134
663	Pre-award and post-delivery audits of rolling stock purchases	1142
665	Bus testing	1145

PART 601—ORGANIZATION, FUNCTIONS, AND PROCEDURES

Subpart A—General

Sec.
601.1 Purpose.
601.2 Organization of the Administration.
601.3 General responsibilities.
601.4 Responsibilities of the Administrator.

Subpart B—Delegations

601.10 Delegations of authority.

Subpart C—Public Availability of Information

601.20 Sources of information.

AUTHORITY: 49 U.S.C. 1657, 1659; Reorganization Plan No. 2 of 1968 (82 Stat. 1369); 49 CFR 1.51.

Subpart A—General

SOURCE: 41 FR 56808, Dec. 30, 1976, unless otherwise noted.

§ 601.1 Purpose.

This part describes the organization or the Federal Transit Administration (''FTA'') an operating administration within the Department of Transportation. This part also describes the general responsibilities and authority of the officials directing the various offices of which FTA is composed. In addition, this part describes the sources and locations of available FTA program information.

§ 601.2 Organization of the Administration.

(a) The headquarters organization of FTA is composed of 10 principal offices which function under the overall direction of the Federal Transit Administrator (''the Administrator'') and Deputy Administrator. These offices are:

(1) Office of the Administrator.

(2) Office of the Associate Administrator for Administration.

(3) Office of Chief Counsel.

(4) Office of Civil Rights.

(5) Office of Public Affairs.

(6) Office of the Associate Administrator for Transit Assistance.

(7) Office of the Associate Administrator for Policy and Program Development.

(8) Office of the Associate Administrator for Transportation Planning.

(9) Office of the Associate Administrator for Transportation Management and Demonstrations.

(10) Office of the Associate Administrator for Technology Development and Deployment.

The Administrator receives staff support from the Executive Secretariat which coordinates internal document dissemination and project assignments and ensures policy compliance.

(b) The Office of the Administrator and the Offices of Chief Counsel, Public Affairs, the Associate Administrator for Administration, the Associate Administrator for Transit Assistance, the Associate Administrator for Policy and Program Development, and the Associate Administrator for Transportation Planning are located in the Department of Transportation Building, 400 7th Street, SW., Washington, DC 20590. The Offices of Civil Rights, the Associate Administrator for Technology Development and Deployment, and the Associate Administrator for Transportation Management and Demonstrations are located in the Transpoint Building, 2100 2nd Street, SW., Washington, DC 20590.

Region/States	Office/address	Telephone No.
I—Connecticut, Maine, Massachusetts, New Hampshire, Rhode Island, and Vermont.	FTA Representative, c/o Transportation Systems Center, Kendall Square, Room 277, 55 Broadway, Cambridge, Mass. 02142.	617–494–2055
II—New York, New Jersey, Puerto Rico, and Virgin Islands.	FTA Representative, 26 Federal Plaza, Suite 507, New York, N.Y. 10007.	212–264–8162
III—Delaware, District of Columbia, Maryland, Pennsylvania, Virginia, and West Virginia.	FTA Representative, 434 Walnut St., Suite 1010, Philadelphia, Pa. 19106.	215–597–8098
IV—Alabama, Florida, Georgia, Kentucky, Mississippi, North Carolina, South Carolina, and Tennessee.	FTA Representative, 1720 Peachtree Rd. NW., Suite 400, Atlanta, Ga. 30309.	404–526–3948
V—Illinois, Indiana, Minnesota, Michigan, Ohio, and Wisconsin.	FTA Representative, 300 South Wacker Dr., Suite 1740, Chicago, Ill. 60606.	312–353–0100
VI—Arkansas, Louisiana, New Mexico, Oklahoma, and Texas.	FTA Representative, 819 Taylor St., Suite 3A32, Fort Worth, Tex. 76102.	817–334–3787

Region/States	Office/address	Telephone No.
VII—Iowa, Kansas, Missouri, and Nebraska	FTA Representative, 6301 Pork Hill Rd., Room 303, Kansas City, Mo. 64131.	816–926–5053
VIII—Colorado, Montana, North Dakota, South Dakota, Utah, and Wyoming.	FTA Representative, Prudential Plaza, Suite 1822, 1050 17th St., Denver, Colo. 80202.	303–837–3242
IX—Arizona, California, Hawaii, Nevada, Guam, and American Samoa.	FTA Representative, Two Embarcadero Center, Suite 620, San Francisco, Calif. 94111.	415–556–2884
X—Alaska, Idaho, Oregon, and Washington	FTA Representative, Federal Bldg., Suite 3106, 915 2d Ave., Seattle, Wash. 98174.	206–442–4210

§ 601.3 General responsibilities.

The general responsibilities of each of the offices which comprise the headquarters organization of FTA are:

(a) *Office of the Associate Administrator for Administration*. Directed by an Associate Administrator for Administration, this office provides general administrative support services for FTA, including financial management, personnel administration, audit, procurement, logistical and management information systems.

(b) *Office of Chief Counsel*. Directed by a Chief Counsel, this office provides legal advice and services to the Administrator and other FTA officials; coordinates with and provides support to the General Counsel of DOT on matters involving urban mass transportation; and, provides liaison between FTA and the Department of Labor regarding the administration of section 13(c) of Federal Mass Transit Act of 1964, as amended (''the Act'').

(c) *Office of Public Affairs*. Directed by a Director of Public Affairs, this office advises and assists the Administrator in the area of public relations and in the dissemination to the public and the news media of information about FTA programs, projects and activities.

(d) *Office of the Associate Administrator for Policy and Program Development*. Directed by an Associate Administrator for Policy and Development, this office advises and assists the Administrator in the development and evaluation of policies and plans for implementing the functions and programs authorized by the Act; coordinates FTA activities with those of other agencies; and manages and administers the University Research Program under section 11 of the Act (49 U.S.C. 1607(c)). This office has three organizational components: The Office of Policy Development; the Office of Program Evaluation; and the Office of Policy Research.

(e) *Office of the Associate Administrator for Transit Assistance*. Directed by an Associate Administrator for Transit Assistance, this office reviews and processes all applications for urban mass transportation capital and operating assistance grants and loans under sections 3, 4, 5, 16 and 17 of the Act (49 U.S.C. 1602, 1603, 1604, 1612 and 1613); reviews and processes applications for Federal assistance to the Washington Metropolitan Area Transit Authority (WMATA) under the Transportation Act of 1972 and the National Capital Area Transit Act of 1972; directs the evaluation and analysis of proposed annual programs and individual programs and individual projects; and approves and recommends for approval annual programs and individual projects. This office has three operating components which direct and coordinate post-approval grant activities: the Office of Grant Assistance, the Office of Program Support, and the Office of Program Analysis.

(f) *Office of the Associate Administrator for Transportation Planning*. Directed by an Associate Administrator for Transportation Planning, this office assists the Administrator in directing, coordinating and controlling FTA's transportation planning assistance and reviews planning activities both in relation to FTA-supported State and local actions and planning policy interaction within the Department of Transportation and with other Federal agencies; and administers grants to States and local public bodies under section 9 of the Act (49 U.S.C. 1607a). This office has two organizational components: the Office of Planning Assistance and the Office of Planning Methodology and Technical Support.

(g) *Office of the Associate Administrator for Transportation Management and*

Demonstrations. Directed by an Associate Administrator for Transportation Management and Demonstrations, this office assists the Administrator in directing, conducting and controlling research and demonstration activities, including information dissemination, to foster the development of methods for improving transit management and operations from the perspectives of the operator and the user; administers grant and procurement contracts to demonstrate facilities, methods and techniques under section 6(a) of the Act (49 U.S.C. 1605), and managerial training fellowship grants under section 10 of the Act (49 U.S.C. 1607b). This office has two organizational components: the Office of Transit Management and the Office of Service and Methods Demonstrations.

(h) *Office of the Associate Administrator for Technology Development and Deployment*. Directed by an Associate Administrator for Technology Development and Deployment, this office is responsible for developing and administering a program of research, development, testing, evaluation, operational demonstration, product qualification, standardization, analysis, and information exchange concerning new products intended for use in transportation systems assisted by FTA. The office is also responsible for FTA's safety and system assurance function and for advising the Administrator on matters relating to technology. This office administers research, development and demonstration projects under section 6(a) of the Act (49 U.S.C. 1605).

(i) *Office of Civil Rights*. Directed by a Director of Civil Rights, this office advises and assists the Administrator and other FTA officials in implementing compliance with applicable laws and directives pertaining to civil rights and equal employment opportunity, both within FTA and in the conduct of urban mass transportation projects and programs.

§ 601.4 Responsibilities of the Administrator.

The Administrator is responsible for the planning, direction, and control of the activities of FTA and has authority to approve urban mass transportation grants, loans, and contracts. The Deputy Administrator is the ''first assistant'' for purposes of the Federal Vacancies Reform Act of 1998 (Pub. L. 105–277) and shall, in the event of the absence or disability of the Administrator, serve as the Acting Administrator, subject to the limitations in that Act. In the event of the absence or disability of both the Administrator and the Deputy Administrator, officials designated by the agency's internal order on succession shall serve as Acting Deputy Administrator and shall perform the duties of the Administrator, except for any non-delegable statutory and/or regulatory duties.

[64 FR 61033, Nov. 9, 1999]

Subpart B—Delegations

§ 601.10 Delegations of authority.

(a) Pursuant to authority delegated to the Administrator by 49 CFR 1.45(b) and 1.51 of the regulations of the Office of the Secretary of Transportation, the following powers and duties of the Administrator are redelegated to the officials indicated—

(1) The Associate Administrator for Transit Assistance is delegated authority to execute grant contracts, loan agreements, and amendments thereto with respect to approved capital and operating grants, loans and advanced land acquisition loan projects under sections 3, 4, 5, 16 and 17 of the Act (49 U.S.C. 1602, 1603, 1604, 1612 and 1613); under limited circumstances review and approve applications for grants and grant amendments under the FT Act and section 110 of the Federal-Aid Highway Act of 1976 and 121(a) of the Federal-Aid Highway Act of 1973, as amended (23 U.S.C. 103 (e) (4) and 142). The Associate Administrator is further authorized, in connection with the administration of those projects, to approve requisitions for funds, third-party contracts, and project budget amendments within previously authorized limits.

(2) The Associate Administrator for Policy and Program Development is delegated authority to execute and amend grant contracts and amendments for university research and training projects under section 11 of the Act (49 U.S.C. 1607c). The Associate

Administrator is further authorized in connection with the administration of those projects to approve requisitions for funds, third-party contracts and project budget amendments within previously authorized limits.

(3) The Associate Administrator for Technology Development and Deployment is delegated authority to execute and amend grant contracts and procurement requests for approved projects under section 6(a) of the Act (49 U.S.C. 1605); The Associate Administrator is further authorized, in connection with the administration of grant contracts, procurement contracts, interagency reimbursable agreements and purchase orders, to approve requisitions for funds, third-party contracts, and project budget amendments within previously authorized limits.

(4) The Associate Administrator for Transportation Planning is delegated authority to execute and amend grant contracts and interagency agreements for planning, engineering, architectural feasibility and operational improvement study projects under section 9 of the Act (48 U.S.C. 1607a); review and approve grant applications and grant amendments requested pursuant to section 9 of the Act by urbanized areas of less than 500,000 population. The Associate Administrator is further authorized in connection with the administration of such contracts to approve requisitions for funds, third-party contracts and project budget amendments within previously authorized limits.

(5) The Associate Administrator for Transportation Management and Demonstrations is delegated authority to execute and amend grant contracts for projects designed to demonstrate facilities, methods and techniques of transit management and operations under section 6(a) of the Act (49 U.S.C. 1605) and for approved managerial training fellowship projects under section 10 of the Act (49 U.S.C. 1607b). The Associate Administrator is further authorized, in connection with the administration of such projects to approve requisitions for project funds, third-party contracts and project budget amendments within previously authorized limits.

(b) All authority delegated to an official listed in paragraph (a) of this section may be redelegated by that official to one or more employees under his jurisdiction.

[41 FR 56809, Dec. 30, 1976]

Subpart C—Public Availability of Information

§ 601.20 Sources of information.

(a) The Federal Transit Administration has published a series of internal and external directives which contain the history, organization, policy, procedures, criteria, guidelines, interpretations and general regulations formulated and adopted by FTA as guidance for grant recipients, and the general public. All directives are listed in FTA Notice N 0000.17 ''Directives Checklist.''

(b) Single copies of the checklist or any directive may be obtained without charge upon written request either to the Director, Office of Public Affairs, Federal Transit Administration, Room 9314, 400 Seventh Street, SW., Washington, DC 20590, or any Federal Transit Administration regional office listed in § 601.2.

(c) The Federal Transit Administration maintains, under the supervision of the Director of Public Affairs, a document inspection facility in Room 9314 at the headquarters of the Department of Transportation Building (Nassif Building), 400 Seventh Street, SW., Washington, DC 20590, through which the following FTA documents may be obtained:

(1) An index to, and copies of, the internal and external directives of the Federal Transit Administration.

(2) Any proposed or final regulation issued by the Federal Transit Administration, and any background information for these regulations.

(d) Any person desiring to inspect any of these records, or obtain a copy thereof, must submit a request in writing, specifying the record to be inspected or copied to the Director, Office of Public Affairs, Federal Transit Administration, Room 9314, 400 Seventh Street, SW., Washington, DC 20590, accompanied by the appropriate

fee for copies prescribed in 49 CFR part 7, subpart I.

(Authority: 5 U.S.C. 552; 49 U.S.C. 1657; 49 CFR 7.1(d))

[47 FR 55684, Dec. 13, 1982]

PART 604—CHARTER SERVICE

Subpart A—General

Sec.
604.1 Purpose.
604.3 Applicability.
604.5 Definitions.
604.7 Charter agreement.
604.9 Charter service.
604.11 Procedures for determining if there are any willing and able private charter operators.
604.13 Reviewing evidence submitted by private charter operators.

Subpart B—Complaint Process

604.15 Filing a complaint.
604.17 Remedies.
604.19 Appeals.
604.21 Judicial review.
APPENDIX A TO PART 604

AUTHORITY: 49 U.S.C. 5323(d); 23 U.S.C. 103(e)(4); 142(a); and 142(c); and 49 CFR 1.51.

SOURCE: 52 FR 11933, Apr. 13, 1987, unless otherwise noted.

Subpart A—General

§ 604.1 Purpose.

The purpose of this part is to implement section 3(f) and section 12(c)(6) of the FT Act.

§ 604.3 Applicability.

This part applies to all applicants and recipients of Federal financial assistance under:

(a) Sections 3 (excluding section 16(b)(2)), 5, 9A, 9 or 18 of the FT Act; or

(b) Sections 103(e)(4), 142(a), or 142(c) of Title 23 United States Code which permit the use of Federal-Aid Highway funds to purchase buses.

§ 604.5 Definitions.

(a) All definitions in the FT Act (at 49 U.S.C. 1608) are applicable to this part, except as may otherwise be provided in this section.

(b) *The Acts* means the FT Act and those parts of Title 23 United States Code, 23 U.S.C. 103(e)(4), 142(a) and 142(c), that provide for assistance to public bodies for purchasing buses.

(c) *Administrator* means the Administrator of FTA or his or her designee.

(d) *Categories of Revenue Vehicle* means bus or van.

(e) *Charter Service* means transportation using buses or vans, or facilities funded under the Acts of a group of persons who pursuant to a common purpose, under a single contract, at a fixed charge (in accordance with the carrier's tariff) for the vehicle or service, have acquired the exclusive use of the vehicle or service to travel together under an itinerary either specified in advance or modified after having left the place of origin. This definition includes the incidental use of FTA funded equipment for the exclusive transportation of school students, personnel, and equipment.

(f) *Chief Counsel* means the Chief Counsel of FTA.

(g) *Days* means calendar days in subpart A and Federal working days in subpart B.

(h) *Designated Official* means the applicant's and recipient's employee authorized to file applications on behalf of the applicant or to enter into agreements on behalf of the recipient.

(i) *Incidental Charter Service* means charter service which does not: (1) interfere with or detract from the provision of the mass transportation service for which the equipment or facilities were funded under the Acts; or (2) does not shorten the mass transportation life of the equipment or facilities.

(j) *Interested Party* means an individual, partnership, corporation, association, or public or private organization that has a financial interest which is adversely affected by the act or acts of a recipient regarding charter service.

(k) *Non-urbanized area* means an area with a population of less than 50,000 people.

(l) *Recipient* means one that has received or is receiving Federal financial assistance under the Acts. The term includes subrecipients of a recipient, subrecipients in FTA's State administered programs, public bodies that receive assistance that will be passed on to another public or quasi-public body, any

operator for a recipient, whether publicly or privately owned, and may include lessees of federally assisted buses and other equipment. For any FTA State administered program, the State is the recipient.

(m) *State Administered Program* means any FTA grant program in which the State is the recipient of funds, passes the funds to subrecipients, and administers the program for FTA.

(n) *FT Act* means the Federal Mass Transit Act of 1964, as amended, 49 U.S.C. 1601 *et seq.*

(o) *FTA* means the Federal Transit Administration.

(p) *Willing and able* means having the desire, having the physical capability of providing the categories of revenue vehicles requested, and possessing the legal authority, including the necessary safety certifications, licenses and other legal prerequisites, to provide charter service in the area in which it is proposed to be provided.

§ 604.7 Charter agreement.

(a) Every applicant for financial assistance under sections 3 (excluding section 16(b)(2)), 5, 9A, 9 or 18 of the FT Act, or under 23 U.S.C. 103(e)(4), 142(a) or 142(c), must include two copies of a charter bus agreement signed by the applicant's designated official with each grant application submitted to FTA after May 13, 1987. For FTA's State administered programs, the State is the applicant.

(b) The text of the agreement must be as follows:

I, (name), (title), agree that (name of applicant) and all recipients through (name of applicant) will provide charter service that uses equipment or facilities provided under the Federal Mass Transit Act of 1964, as amended (49 U.S.C. 1601 *et seq.*) or under 23 U.S.C. 103(e)(4), 142(a) or 142(c) (the Acts) only to the extent that there are no private charter service operators willing and able to provide the charter service that (name of applicant) and all recipients through (name of applicant) desire to provide unless one or more of the exceptions in 49 CFR 604.9 applies.

I further agree that (name of applicant) and all recipients through (name of applicant) will comply with the provisions in 49 CFR part 604 before they provide any charter service using equipment or facilities provided under the Acts, that the requirements of 49 CFR part 604 will apply to any such charter service that is provided, and that the definitions in 49 CFR part 604 apply to this agreement.

Applicant

Name

Title

Date

Federal Transit Administration

Name

Title

Date

(c) If FTA approves the grant application, the approving official shall sign the agreement when the grant application is approved. One copy of the signed agreement will be retained by FTA and the other copy will be returned to the recipient, formerly the applicant.

(d) Once the applicant and FTA enter into a charter agreement, the applicant may incorporate that agreement by reference into any subsequent grant application instead of submitting an agreement under 49 CFR 604.7(a).

(e) Each State in FTA's State administered programs must:

(1) Obtain a certification of compliance with this part from each of its current subrecipients within 60 days of May 13, 1987. The certification shall state: ''(Name of subrecipient) certifies that it shall comply with 49 CFR part 604 in the provision of any charter service provided with FTA funded equipment or facilities.'';

(2) Retain this certification as long as the subrecipient is a subrecipient; and

(3) Assure in each application submitted to FTA after May 13, 1987, that all subrecipients have submitted the certification.

(f) If any recipient does not anticipate submitting a grant application to FTA during Federal fiscal year 1987, the recipient must submit two copies

of the agreement set forth in § 604.7(b) of this part within 60 days of May 13, 1987, to the appropriate FTA regional office. FTA will sign the agreement, retain one copy of the agreement and return the other to the recipient.

(Approved by the Office of Management and Budget under Control No. 2132–0543)

§ 604.9 Charter service.

(a) If a recipient desires to provide any charter service using FTA equipment or facilities the recipient must first determine if there are any private charter operators willing and able to provide the charter service which the recipient desires to provide. To the extent that there is at least one such private operator, the recipient is prohibited from providing charter service with FTA funded equipment or facilities unless one or more of the exceptions in § 604.9(b) applies.

(b) *Exceptions.* (1) A recipient may provide any and all charter service with FTA funded equipment and facilities to the extent that there are no willing and able private charter operators.

(2) A recipient may enter into a contract with a private charter operator to provide charter equipment to or service for the private charter operator if:

(i) The private charter operator is requested to provide charter service that exceeds its capacity; or

(ii) The private charter operator is unable to provide equipment accessible to elderly and handicapped persons itself.

(3) A recipient in a non-urbanized area may petition FTA for an exception to provide charter service directly to the customer if the charter service provided by the willing and able private charter operator or operators would create a hardship on the customer because:

(i) The willing and able private charter operator or operators impose minimum durations pursuant to State regulation and the desired trip length is shorter than the mandatory trip length; or

(ii) The willing and able private operator or operators are located too far from the origin of the charter service.

(4) Any recipient may petition the Administrator for an exception to provide charter service directly to the customer for special events to the extent that private charter operators are not capable of providing the service.

(5) A recipient may execute a contract with a government entity or a private, non-profit organization exempt from taxation under subsection 501(c)(1), 501(c)(3), 501(c)(4), or 501(c)(19) of the Internal Revenue Code to provide charter service upon obtaining a certification from that entity or organization which states that:

(i) [the entity/organization] certifies that it is a government entity or an organization exempt from taxation under subsection 501(c)(1), 501(c)(3), 501(c)(4), or 501(c)(19) of the Internal Revenue Code; there will be a significant number of handicapped persons as passengers on this charter trip; the requested charter trip is consistent with the function and purpose of [the entity/organization]; and the charter trip will be organized and operated in compliance with Title VI of the Civil Rights Act of 1964, as amended; and, section 19 of the Federal Mass Transit Act of 1964, as amended, and 49 CFR part 27; or, 45 CFR part 80; or,

(ii) [the entity/organization] certifies that it is a government entity or an organization exempt from taxation under subsection 501(c)(1), 501(c)(3), 501(c)(4), or 501(c)(19) of the Internal Revenue Code; [the entity/organization] is a qualified social service agency under appendix A of 49 CFR part 604, as a recipient of funds, either directly or indirectly, under one or more of the Federal programs listed in appendix A; the requested charter trip is consistent with the function and purpose of [the entity/organization]; and the charter trip will be organized and operated in compliance with Title VI of the Civil Rights Act of 1964, as amended; and, Section 19 of the Federal Mass Transit Act of 1964, as amended, and 49 CFR part 27; or, 45 CFR part 80.

(iii) [the entity/organization] certifies that it is a government entity or organization exempt from taxation under subsection 501(c)(1), 501(c)(3), 501(c)(4), or 501(c)(19) of the Internal Revenue Code; [the entity/organization] either receives or is eligible to receive directly or indirectly, from a State or local governmental body public welfare assistance funds for purposes whose implementation may require the transportation of a group of transit-advantaged or transit-dependent persons; following a petition presented by the State in which the entity or organization resides, FTA has determined in writing that an FTA recipient may contract directly with

the entity or organization for charter services; the requested charter trip is consistent with the functions and purposes of the entity or organization; and the charter trip will be organized and operated in compliance with Title VI of the Civil Rights Act of 1964, as amended; and section 19 of the Federal Mass Transit Act of 1964, as amended, and 49 CFR part 27; or, 45 CFR part 80.

(6) A recipient in a non-urbanized area may execute a contract with a government entity or a private, nonprofit organization exempt from taxation under subsection 501(c)(1), 501(c)(3), 501(c)(4), or 501(c)(19) of the Internal Revenue Code to provide charter service upon obtaining a certification from that entity or organization which states that:

[the entity/organization] certifies that it is a government entity or an organization exempt from taxation under subsection 501(c)(1), 501(c)(3), 501(c)(4), or 501(c)(19) of the Internal Revenue Code; more than 50% of the passengers on this charter trip will be elderly; the requested charter trip is consistent with the function and purpose of [the entity/organization]; and the charter trip will be organized and operated in compliance with Title VI of the Civil Rights Act of 1964, as amended; and, Section 19 of the Federal Mass Transit Act of 1964, as amended, and 49 CFR part 27; or, 45 CFR part 80.

(7) A recipient may provide charter service directly to the customer where a formal agreement has been executed between the recipient and all private charter operators it has determined to be willing and able in accordance with this part, provided that:

(i) The agreement specifically allows the recipient to provide the particular type of charter trip;

(ii) The recipient has provided for such an agreement in its annual public charter notice published pursuant to this part before undertaking any charter service pursuant to this exception; and

(iii) If a recipient has received several responses to its annual public charter notice but ceased its review process after determining that one private operator was willing and able, it must, before concluding a formal charter agreement under this section, complete the review process to ensure that all the willing and able private operators are valid parties to the agreement.

(8) During the demonstration period described in paragraph (b)(8)(iv) of this section, recipients in the FTA-selected sites may submit applications to provide charter service to an advisory panel equally representative of public transit providers or local business organizations and local private operators, and which has either been created for such purpose by the grantee, the State Department of Transportation (State DOT), or metropolitan planning organization (MPO), or which is part of the recipient's existing private sector consultation process.

(i) The advisory panel will forward these applications to the State DOT or MPO, which will grant those recommended by unanimous vote of the advisory panel.

(ii) If the advisory panel does not unanimously endorse an application, the State DOT or MPO will make a decision to grant or deny the application based on the following criteria:

(A) *Cost evaluation*. A recipient may provide charter service when it can do so at a significantly lower cost than can private charter operators. Cost differences may be considered significant when there is approximately a twenty percent difference between the average charge for service by private operators and the recipient's fully allocated cost of providing the service, or when the advisory panel determines them to be significant.

(B) *Equipment uniqueness*. A recipient may provide charter service using equipment that is not available from a private source, when such equipment is essential to the purpose of the charter trip.

(C) *Service nature*. A recipient may provide unscheduled or demand responsive service that could not be provided by a private operator without advance notice or at a substantial surcharge to the customer.

(D) *Specific local factors*. A recipient may provide service which responds to a clear need that cannot be met by the local private sector, and which is important to the economic or social health and vitality of the local area.

(iii) The State DOT or MPO may not grant applications to provide service

that would jeopardize the economic vitality of individual private charter operators or would seriously detract from private charter business.

(iv) The service described in this subsection may be provided only during the demonstration program to be conducted through October 31, 1995, in the following sites:

(A) Monterey, California;

(B) Oklahoma City, Oklahoma;

(C) St. Louis, Missouri;

(D) Yolo County, California;

(E) Four sites within the State of Michigan.

(c) The process for requesting and granting an exception under 49 CFR 604.9(b)(3):

(1) The recipient must provide the private charter operators that it has determined are willing and able in accordance with this part with a written notice explaining why it is seeking an exception and state that they have at least 30 days to submit written comments to the recipient on the request;

(2) The recipient must send a copy of the notice, all comments received, and any further information it desires in support of its request to the Chief Counsel.

(3) The Chief Counsel shall review the materials submitted and issue a written decision denying or granting in whole or in part the request. In making this decision, the Chief Counsel may seek such additional information as the Chief Counsel determines is needed.

(4) Any exception that the Chief Counsel grants under 49 CFR 604.9(b)(3) shall be effective for not longer than 12 months from the date that the Chief Counsel grants it.

(d) The process for requesting and granting and exception under 49 CFR 604.9(b)(4):

(1) The recipient must submit its petition for an exception to the Administrator at least 90 days prior to the day or days on which it desires to provide charter service.

(2) The petition must describe the event, explain how it is special, and explain the amount of charter service which private charter operators are not capable of providing.

(3) The Administrator will review the materials and issue a written decision denying or granting in whole or in part the request. In making this decision, the Administrator may seek such additional information as the Administrator determines is needed.

(4) Any exception granted by the Administrator under 49 CFR 604.9(b)(4) shall be effective solely for the event for which the recipient requests an exception.

(e) Any charter service that a recipient provides under any of the exceptions in this part must be incidental charter service.

[52 FR 11933, Apr. 13, 1987, as amended at 53 FR 53355, Dec. 30, 1988; 58 FR 36899, July 9, 1993; 58 FR 52685, Oct. 12, 1993; 59 FR 51134, Oct. 7, 1994]

§ 604.11 Procedures for determining if there are any willing and able private charter operators.

(a) To determine if there is at least one private charter operator willing and able to provide the charter service that the recipient desires to provide, the recipient must complete a public participation process:

(1) At least 60 days before it desires to begin to provide charter service if it is not doing so on May 13, 1987; or

(2) Not more than 90 days after May 13, 1987 if the recipient is providing charter service on May 13, 1987 and desires to continue to provide charter service.

(b) The public participation process must at a minimum include:

(1) Placing a notice in a newspaper, or newspapers, of general circulation within the proposed geographic charter service area;

(2) Sending a copy of the notice to all private charter service operators in the proposed geographic charter service area and to any private charter service operator that requests notice;

(3) Sending a copy of the notice to the United Bus Owners of America , 1300 L Street, NW., suite 1050, Washington, DC 20005, and the American Bus Association, 1100 New York Avenue, NW, Suite 1050, Washington, DC 20005–3934.

(c) The notice must:

(1) State the recipient's name;

(2) Describe the charter service that the recipient proposes to provide limited to the days, times of day, geographic area, and categories of revenue

vehicle, but not the capacity or the duration of the charter service.

(3) Include a statement providing any private charter operator desiring to be considered willing and able with at least 30 days from the date of the notice to submit written evidence to prove that it is willing and able;

(4) State the address to which the evidence must be sent.

(5) Include a statement that the evidence necessary for the recipient to determine if a private charter operator is willing and able includes only the following:

(i) A statement that the private operator has the desire and the physical capability to actually provide the categories of revenue vehicle specified; and

(ii) A copy of the documents to show that the private charter operator has the requisite legal authority to provide the proposed charter service and that it meets all necessary safety certification, licensing and other legal requirements to provide the proposed charter service.

(6) Include a statement that the recipient shall review only that evidence submitted by the deadline, shall complete its review within 30 days of the deadline, and within 60 days of the deadline shall inform each private operator that submitted evidence what the results of the review are.

(7) Include a statement that the recipient shall not provide any charter service using equipment or facilities funded under the Acts to the extent that there is at least one willing and able private charter operator unless the recipient qualifies for one or more of the exceptions in 49 CFR 604.9(b).

(d) Any recipient that desires to continue to provide charter service using FTA funded equipment or facilities shall follow the procedures in 49 CFR 604.11 (b) and (c) annually during the month in which it published its first newspaper notice to redetermine the extent to which there is at least one willing and able private charter operator.

(e) Any recipient, including the State in State administered programs, may elect to comply with this procedure for all of its subrecipients, or delegate this responsibility to the subrecipients, or delegate this responsibility to only some of its subrecipients.

(Approved by the Office of Management and Budget under Control No. 2132–0543)

[52 FR 11933, Apr. 13, 1987, as amended at 55 FR 34932, Aug. 27, 1990; 59 FR 43778, Aug. 25, 1994]

§ 604.13 Reviewing evidence submitted by private charter operators.

(a) The recipient shall review the evidence submitted in response to the notice given under 49 CFR 604.11 within 30 days of the deadline for the submission of evidence.

(b) Within 60 days of the deadline for the submission of evidence, the recipient shall notify each private charter operator that submitted evidence of the recipient's decision.

(c) The recipient must review the evidence submitted to determine if the evidence proves that the private charter operator has:

(1) The desire and the physical capability to actually provide charter service using the categories of revenue vehicles; and

(2) The required legal authority and the necessary safety certifications, licenses and other legal requirements to provide charter service.

(d) The recipient must determine that a private charter operator which meets the requirements in 49 CFR 604.13(c) is willing and able.

(e) A recipient may look behind the evidence submitted by a private charter operator only if the recipient has reasonable cause to believe that some or all of the evidence has been falsified.

(f) A recipient may, within its discretion, stop reviewing the evidence submitted by private charter operators when the recipient has determined that there is one or more private charter operators willing and able to provide all of the charter service that the recipient proposed to provide in its notice. A recipient may, however, review the evidence submitted by all private charter operators and create a roster of willing and able private charter operators.

(g) The entity that complies with the public participation process under 49 CFR 604.11(e) shall be responsible for

complying with the requirements in 49 CFR 604.13.

(Approved by the Office of Management and Budget under Control No. 2132–0543)

Subpart B—Complaint Process

§ 604.15 Filing a complaint.

(a) An interested party (''complainant'') who believes that a recipient is in violation of the requirements of this part may submit a written complaint to the FTA Regional Administrator. The complainant shall also send a copy of the complaint to the recipient (''respondent'').

(b) If the Regional Administrator determines that the complaint is not without obvious merit and that it states grounds on which relief may be granted, the Regional Administrator shall advise the complainant and respondent to attempt to conciliate the dispute. The period for informal conciliation shall last for up to 30 days from the date of receipt of the Regional Administrator's order unless an extension is mutually agreed upon by the parties.

(c) If the parties are unable to conciliate the dispute, either party may so notify the Regional Administrator in writing. The Regional Administrator shall send a copy of the complaint to the respondent and provide it with 30 days from the receipt of the notice to provide written evidence to show that no violation has occurred. The respondent shall provide a copy of this information to the complainant.

(d) After the Regional Administrator receives that respondent's evidence, the Regional Administrator shall inform the complainant that it has 30 days from the receipt of the notice to rebut the respondent's evidence. The complainant shall provide a copy of its rebuttal to the respondent.

(e) The Regional Administrator shall review the evidence submitted and prepare a written decision. The Regional Administrator shall attempt to transmit the written decision to the parties within 30 days of receiving all of the evidence.

(f) If the Regional Administrator determines that further investigation is necessary, including the submission of additional information or the holding of an informal evidentiary hearing, the Regional Administrator shall so inform the parties in writing.

(g) Either party may request an informal evidentiary hearing prior to the transmission of the Regional Administrator's decision. The Regional Administrator may grant or deny the request.

(h) If an informal evidentiary hearing is held, the date and location shall be arranged by the Regional Administrator in consultation with the parties. Any new evidence introduced by the parties at the informal evidentiary hearing shall be submitted to the Regional Administrator within 10 days after the hearing.

(i) The Regional Administrator may extend the deadlines imposed in this part for administrative convenience by notifying all parties in writing of the extensions.

[52 FR 11933, Apr. 13, 1987, as amended at 58 FR 52685, Oct. 12, 1993]

§ 604.17 Remedies.

(a) If the Regional Administrator determines that a violation of this part has occurred, the Regional Administrator may order such remedies as the Regional Administrator determines are appropriate.

(b) If the Regional Administrator determines that there has been a continuing pattern of violation of this part, the Regional Administrator may bar the respondent from the receipt of further financial assistance for mass transportation facilities and equipment.

[52 FR 11933, Apr. 13, 1987, as amended at 58 FR 52685, Oct. 12, 1993]

§ 604.19 Appeals.

(a) The losing party may appeal the Regional Administrator's decision to the Administrator within 10 days of receipt of the decision. The losing party (''appellant'') shall include in its appeal the basis for the appeal and evidence to support the position. The appellant shall send a copy of the appeal to the prevailing party (''appellee'').

(b) The Administrator will only take action on an appeal if the appellant presents evidence that there are new matters of fact or points of law that were not available or not known during the investigation of the complaint.

(c) If the Administrator takes action on an appeal, the Administrator shall provide the appellee with 10 days from the receipt of the notice to respond to the evidence contained in the appeal.

(d) The Administrator shall send a copy of the appellee's response to the appellant and provide it with 10 days from the receipt of the notice to rebut the appellee's response.

(e) The Administrator shall endeavor to make a final determination on the appeal within 10 days of the receipt of the appellant's rebuttal.

[52 FR 11933, Apr. 13, 1987, as amended at 58 FR 52685, Oct. 12, 1993]

§ 604.21 Judicial review.

The Regional Administrator's decision, or the Administrator's decision on appeal, shall be final and conclusive on all parties, but it is subject to judicial review pursuant to sections 701–706 of Title 5 of the United States Code.

[52 FR 11933, Apr. 13, 1987, as amended at 58 FR 52685, Oct. 12, 1993]

APPENDIX A TO PART 604

The following is a list of Federal assistance programs administered under the United States Department of Health and Human Services (HHS). The financial assistance under each of these HHS programs includes funding for the transportation needs of the program beneficiaries.

Program title	Agency
Project Grant and Cooperative Agreements for Tuberculosis Control Programs.	Public Health Service, HHS.
Mental Health Service for Cuban Entrants.	Public Health Service, HHS.
Mental Health Planning and Demonstration Projects.	Public Health Service, HHS.
Alcohol, Drug Abuse Treatment and Rehabilitation Block Grant.	Public Health Service, HHS.
Family Planning-Services	Public Health Service, HHS.
Community Health Centers ...	Public Health Service, HHS.
Indian Health Services—Health Management Development Program.	Public Health Service, HHS.
Migrant Health Centers Grants.	Public Health Service, HHS.
Childhood Immunization Grants.	Public Health Service, HHS.
Administration for Children, Youth and Families (ACYF)—Head Start.	Office of Human Development Services, HHS.
ACYF Child Welfare Research and Demonstration Program.	Office of Human Development Services, HHS.
ACYF Runaway and Homeless Youth.	Office of Human Development Services, HHS.
ACYF Adoption Opportunities	Office of Human Development Services, HHS.
ACYF Child Abuse and Neglect (State Grants).	Office of Human Development Services, HHS.
ACYF Child Abuse and Neglect Discretionary.	Office of Human Development Services, HHS.
Administration for Native Americans (ANA) Native American Programs—Financial Assistance Grants.	Office of Human Development Services, HHS.
ANA Research, Demonstration and Evaluation.	Office of Human Development Services, HHS.
ANA Training and Technical Assistance.	Office of Human Development Services, HHS.
Administration of Developmental Disabilities (ADD)—Basic Support and Advocacy Grants.	Office of Human Development Services, HHS.
ADD Special Projects	Office of Human Development Services, HHS.
ADD University Affiliated Facilities.	Office of Human Development Services, HHS.
Administration on Aging (ADA) Special Programs for the Aging—Grants for Supportive Services and Senior Centers.	Office of Human Development Services, HHS Title III, Part B—
ADA Title III, Part C, Nutrition Services.	Office of Human Development Services, HHS.
ADA Grants to Indian Tribes	Office of Human Development Services, HHS.
ADA Training, Research and Discretionary Projects and Programs.	Office of Human Development Services, HHS.
Social Service Block Grant ...	Office of Human Development Services, HHS.
Medical Assistance Program Title XIX.	Health Care Financing Medicaid; Administration, HHS.
Medicare—Supplemental Medical Insurance.	Health Care Financing Administration, HHS.0
Aid to Families with Dependent Children (AFDC)—Maintenance Assistance.	Family Support Administration, HHS.
Work Incentive Program	Family Support Administration, HHS.
Community Service Block Grant (CSBG).	Family Support Administration, HHS.
CSBG Discretionary Awards	Family Support Administration, HHS.
CSBG Discretionary Awards—Community Food and Nutrition.	Family Support Administration, HHS.
Social Security—Disability Insurance.	Social Security Administration, HHS.
Supplemental Security Income.	Social Security Administration, HHS.
Home Health Services and Training.	Public Health Service, HHS.
Coal Miners Respiratory Impairment Treatment Clinics and Services.	Public Health Service, HHS.
Preventive Health Services—Sexually Transmitted Diseases Control Grants.	Public Health Service, HHS.
Health Programs for Refugees.	Public Health Service, HHS.

[53 FR 53355, Dec. 30, 1988]

PART 605—SCHOOL BUS OPERATIONS

Subpart A—General

Sec.
605.1 Purpose.
605.2 Scope.
605.3 Definitions.
605.4 Public hearing requirement.

Subpart B—School Bus Agreements

605.10 Purpose.
605.11 Exemptions.
605.12 Use of project equipment.
605.13 Tripper service.
605.14 Agreement.
605.15 Content of agreement.
605.16 Notice.
605.17 Certification in lieu of notice.
605.18 Comments by private school bus operators.
605.19 Approval of school bus operations.

Subpart C—Modification of Prior Agreements and Amendment of Application for Assistance

605.20 Modification of prior agreements.
605.21 Amendment of applications for assistance.

Subpart D—Complaint Procedures and Remedies

605.30 Filing a complaint.
605.31 Notification to the respondent.
605.32 Accumulation of evidentiary material.
605.33 Adjudication.
605.34 Remedy where there has been a violation of the agreement.
605.35 Judicial review.

Subpart E—Reporting and Records

605.40 Reports and information.
APPENDIX A TO PART 605

AUTHORITY: Federal Mass Transit Act of 1964, as amended (49 U.S.C. 1601 *et seq.*); 23 U.S.C. 103(e)(4); 23 U.S.C. 142 (a) and (c); and 49 CFR 1.51.

SOURCE: 41 FR 14128, Apr. 1, 1976, unless otherwise noted.

Subpart A—General

§ 605.1 Purpose.

(a) The purpose of this part is to prescribe policies and procedures to implement section 109(a) of the National Mass Transportation Assistance Act of 1974 (Pub. L. 93–503; November 26, 1974; 88 Stat. 1565). Section 109(a) adds a new section 3(g) to the Federal Mass Transit Act of 1964, as amended (49 U.S.C. 1602(g)) and differs from section 164(b) of the Federal-Aid Highway Act of 1973 (49 U.S.C. 1602a(b)) in that section 3(g) applies to all grants for the construction or operation of mass transportation facilities and equipment under the Federal Mass Transit Act, and is not limited to grants for the purchase of buses as is section 164(b).

(b) By the terms of section 3(g) no Federal financial assistance may be provided for the construction or operation of facilities and equipment for use in providing public mass transportation service to an applicant unless the applicant and the Administrator enter into an agreement that the applicant will not engage in school bus operations exclusively for the transportation of students and school personnel, in competition with private school bus operators.

§ 605.2 Scope.

These regulations apply to all recipients of financial assistance for the construction or operation of facilities and equipment for use in providing mass transportation under: (a) The Federal Mass Transit Act of 1964, as amended (49 U.S.C. 1601 *et seq.*); (b) 23 U.S.C. 142 (a) and (c); and 23 U.S.C. 103 (e)(4).

§ 605.3 Definitions.

(a) Except as otherwise provided, terms defined in the Federal Mass Transit Act of 1964, as amended (49 U.S.C. 1604, 1608) are used in this part as so defined.

(b) For purposes of this part—

The Acts means the Federal Mass Transit Act of 1964, as amended (49 U.S.C. 1601 *et seq.*); 23 U.S.C. 142 (a) and (c); and 23 U.S.C. 103(e)(4).

Administrator means the Federal Mass Transit Administrator or his designee.

Adequate transportation means transportation for students and school personnel which the Administrator determines conforms to applicable safety laws; is on time; poses a minimum of discipline problems; is not subject to fluctuating rates; and is operated efficiently and in harmony with state educational goals and programs.

Agreement means a contractual agreement required under section 3(g) of the Federal Mass Transit Act of 1964, as amended (49 U.S.C. 1602(g)).

Applicant means applicant for assistance under the Acts.

Assistance means Federal financial assistance for the purchase of buses and the construction or operation of facilities and equipment for use in providing mass transportation services under the Acts, but does not include research, development and demonstration projects funded under the Acts.

Grant contract means the contract between the Government and the grantee which states the terms and conditions for assistance under the Acts.

Government means the Government of the United States of America.

Grantee means a recipient of assistance under the Acts.

Incidental means the transportation of school students, personnel and equipment in charter bus operations during off peak hours which does not interfere with regularly scheduled service to the public (as defined in the Opinion of the Comptroller General of the United States, B160204, December 7, 1966, which is attached as appendix A of this part).

Interested party means an individual, partnership, corporation, association or public or private organization that has a financial interest which is adversely affected by the act or acts of a grantee with respect to school bus operations.

Reasonable Rates means rates found by the Administration to be fair and equitable taking into consideration the local conditions which surround the area where the rate is in question.

School bus operations means transportation by bus exclusively for school students, personnel and equipment in Type I and Type II school vehicles as defined in Highway Safety Program Standard No. 17.

Tripper service means regularly scheduled mass transportation service which is open to the public, and which is designed or modified to accommodate the needs of school students and personnel, using various fare collections or subsidy systems. Buses used in tripper service must be clearly marked as open to the public and may not carry designations such as ''school bus'' or ''school special''. These buses may stop only at a grantee or operator's regular service stop. All routes traveled by tripper buses must be within a grantee's or operator's regular route service as indicated in their published route schedules.

Urban area means the entire area in which a local public body is authorized by appropriate local, State and Federal law to provide regularly scheduled mass transportation service. This includes all areas which are either: (a) Within an ''urbanized area'' as defined and fixed in accordance with 23 CFR part 470, subpart B; or (b) within an ''urban area'' or other built-up place as determined by the Secretary under section 12(c)(4) of the Federal Mass Transit Act of 1964, as amended (49 U.S.C. 1608(c)(4)).

§ 605.4 Public hearing requirement.

Each applicant who engages or wishes to engage in school bus operations shall afford an adequate opportunity for the public to consider such operations at the time the applicant conducts public hearings to consider the economic, social or environmental effects of its requested Federal financial assistance under section 3(d) of the Federal Mass Transit Act of 1964, as amended (49 U.S.C. 1602(d)).

Subpart B—School Bus Agreements

§ 605.10 Purpose.

The purpose of this subpart is to formulate procedures for the development of an agreement concerning school bus operations.

§ 605.11 Exemptions.

A grantee or applicant may not engage in school bus operations in competition with private school bus operators unless it demonstrates to the satisfaction of the Administrator as follows:

(a) That it operates a school system in its urban area and also operates a separate and exclusive school bus program for that school system; or

(b) That private school bus operators in the urban area are unable to provide

adequate transportation, at a reasonable rate, and in conformance with applicable safety standards; or

(c) That it is a state or local public body or agency thereof (or a direct predecessor in interest which has acquired the function of so transporting schoolchildren and personnel along with facilities to be used therefor) who was so engaged in school bus operations:

(1) In the case of a grant involving the purchase of buses—anytime during the 12-month period immediately prior to August 13, 1973.

(2) In the case of a grant for construction or operating of facilities and equipment made pursuant to the FT Act as amended (49 U.S.C. 1601 *et seq.*), anytime during the 12-month period immediately prior to November 26, 1974.

§ 605.12 Use of project equipment.

No grantee or operator of project equipment shall engage in school bus operations using buses, facilities or equipment funded under the Acts. A grantee or operator may, however, use such buses, facilities and equipment for the transportation of school students, personnel and equipment in incidental charter bus operations. Such use of project equipment is subject to part 604 of Federal Mass Transit Regulations.

§ 605.13 Tripper service.

The prohibition against the use of buses, facilities and equipment funded under the Acts shall not apply to tripper service.

§ 605.14 Agreement.

Except as provided in § 605.11 no assistance shall be provided under the Acts unless the applicant and the Administrator shall have first entered into a written agreement that the applicant will not engage in school bus operations exclusively for the transportation of students and school personnel in competition with private school bus operators.

§ 605.15 Content of agreement.

(a) Every grantee who is not authorized by the Administrator under § 605.11 of this part to engage in school bus operations shall, as a condition of assistance, enter into a written agreement required by § 605.14 which shall contain the following provisions:

(1) The grantee and any operator of project equipment agrees that it will not engage in school bus operations in competition with private school bus operators.

(2) The grantee agrees that it will not engage in any practice which constitutes a means of avoiding the requirements of this agreement, part 605 of the Federal Mass Transit Regulations, or section 164(b) of the Federal-Aid Highway Act of 1973 (49 U.S.C. 1602a(b)).

(b) Every grantee who obtains authorization from the Administrator to engage in school bus operations under § 605.11 of this part shall, as a condition of assistance, enter into a written agreement required by § 605.14 of this part which contains the following provisions:

(1) The grantee agrees that neither it nor any operator of project equipment will engage in school bus operations in competition with private school bus operators except as provided herein.

(2) The grantee, or any operator of project equipment, agrees to promptly notify the Administrator of any changes in its operations which might jeopardize the continuation of an exemption under § 605.11.

(3) The grantee agrees that it will not engage in any practice which constitutes a means of avoiding the requirements of this agreement, part 605 of the Federal Transit Administration regulations or section 164(b) of the Federal-Aid Highway Act of 1973 (49 U.S.C. 1602a(b)).

(4) The grantee agrees that the project facilities and equipment shall be used for the provision of mass transportation services within its urban area and that any other use of project facilities and equipment will be incidental to and shall not interfere with the use of such facilities and equipment in mass transportation service to the public.

§ 605.16 Notice.

(a) Each applicant who engages or wishes to engage in school bus operations shall include the following in its application:

(1) A statement that it has provided written notice to all private school bus operators operating in the urban area of its application for assistance and its proposed or existing school bus operations;

(2) A statement that it has published in a newspaper of general circulation in its urban area a notice of its application and its proposed or existing school bus operations;

(b) The notice required by paragraphs (a) (1) and (2) of this section shall include the following information:

(1) A description of the area to be served by the applicant.

(2) An estimation of the number of each type of bus which will be employed on the proposed school bus operations, and the number of weekdays those buses will be available for school bus operations.

(3) A statement of the time, date, and place of public hearings required under section 3(d) of the Federal Mass Transit Act of 1964, as amended (49 U.S.C. 1602(d)), to be held on the application for assistance.

(4) A statement setting forth reasons the applicant feels it should be allowed to engage in school bus operations under § 605.11 of this part.

(c) Copies of the application for assistance and notice required by paragraph (a) of this shall be available for inspection during the regular business hours at the office of the applicant.

§ 605.17 Certification in lieu of notice.

If there are no private school bus operators operating in the applicant's urban area, the applicant may so certify in its application in lieu of meeting the requirements of § 605.16. This certification shall be accompanied by a statement that the applicant has published, in a newspaper of general circulation in its urban area, a notice stating that it has applied for assistance as provided under § 605.16(b) and that it has certified that there are no private school bus operators operating in its urban area. A copy of the notice as published shall be included.

§ 605.18 Comments by private school bus operators.

Private school bus operators may file written comments on an applicant's proposed or existing school bus operations at the time of the public hearing held pursuant to section 3(d) of the Federal Mass Transit Act of 1964, as amended (49 U.S.C. 1602(d)). The comments of private school bus operators must be submitted by the applicant to the Administrator together with the transcript of this public hearing.

§ 605.19 Approval of school bus operations.

(a) The Administrator will consider the comments filed by private school bus operators prior to making any findings regarding the applicant's proposed or existing school bus operations.

(b) After a showing by the applicant that it has complied with the requirements of 49 U.S.C. 1602(d) and this subpart, the Administrator may approve its school bus operations.

(c) If the Administrator finds that the applicant has not complied with the notice requirement of this part or otherwise finds that the applicant's proposed or existing school bus operations are unacceptable, he will so notify the applicant in writing, stating the reasons for his findings.

(d) Within 20 days after receiving notice of adverse findings from the Administrator, an applicant may file written objections to the Administrator's findings or submit a revised proposal for its school bus operations. If an applicant revises its proposed or existing school bus operations, it shall mail a copy of these revisions along with the findings of the administrator to private school bus operators required to be notified under § 605.16.

(e) Private school bus operators who receive notice under paragraph (d) of this section may within 20 days after receipt of notice file written comments on the proposed revisions with the Administrator. The Administrator will consider these comments prior to his approval of a proposed revision by the applicant.

(f) Upon receipt of notice of approval of its school bus operations, the applicant may enter into an agreement with the Administrator under § 605.14.

Subpart C—Modification of Prior Agreements and Amendment of Application for Assistance

§ 605.20 Modification of prior agreements.

(a) Any grantee which, prior to the adoption of this part, entered into an agreement required by section 164(b) of the Federal-Aid Highway Act of 1973 (49 U.S.C. 1602(a)(b)), or section 3(g) of the Federal Mass Transit Act of 1964, as amended (49 U.S.C. 1602(g)), who engages or wishes to engage in school bus operations in competition with private school bus operators, shall seek modification of that agreement in accordance with paragraphs (b) through (d) of this section.

(b) The grantee shall develop a statement setting forth in detail the reasons it feels it should be allowed to engage in school bus operations under § 605.11 of this part. A copy of the statement should be provided private school bus operators who provide service in the grantee's urban area.

(c) The grantee shall allow 30 days for persons receiving notice under this section to respond with written comments concerning its proposed or existing school bus operations.

(d) After receiving written comments, the grantee shall send his proposal with written comments thereon to the Administrator for his review under § 605.17.

§ 605.21 Amendment of applications for assistance.

Pending applications for assistance upon which public hearings have been held pursuant to section 3(d) of the Federal Mass Transit Act of 1964, as amended (49 U.S.C. 1602(d)), and applications which have been approved by the Administrator but for which no grant contract has been executed, shall be amended by the applicant to conform to this part by following the procedures of § 605.20(b) through (d).

Subpart D—Complaint Procedures and Remedies

§ 605.30 Filing a complaint.

Any interested party may file a complaint with the Administrator alleging a violation or violations of terms of an agreement entered into pursuant to § 605.14. A complaint must be in writing, must specify in detail the action claimed to violate the agreement, and must be accompanied by evidence sufficient to enable the Administrator to make a preliminary determination as to whether probable cause exists to believe that a violation of the agreement has taken place.

§ 605.31 Notification to the respondent.

On receipt of any complaint under § 605.30, or on his own motion if at any time he shall have reason to believe that a violation may have occurred, the Administrator will provide written notification to the grantee concerned (hereinafter called ''the respondent'') that a violation has probably occurred. The Administrator will inform the respondent of the conduct which constitutes a probable violation of the agreement.

§ 605.32 Accumulation of evidentiary material.

The Administrator will allow the respondent not more than 30 days to show cause, by submission of evidence, why no violation should be deemed to have occurred. A like period shall be allowed to the complainant, if any, during which he may submit evidence to rebut the evidence offered by the respondent. The Administrator may undertake such further investigation, as he may deem necessary, including, in his discretion, the holding of an evidentiary hearing or hearings.

§ 605.33 Adjudication.

(a) After reviewing the results of such investigation, including hearing transcripts, if any, and all evidence submitted by the parties, the Administrator will make a written determination as to whether the respondent has engaged in school bus operations in violation of the terms of the agreement.

(b) If the Administrator determines that there has been a violation of the agreement, he will order such remedial measures as he may deem appropriate.

(c) The determination by the Administrator will include an analysis and explanation of his findings.

§ 605.34 Remedy where there has been a violation of the agreement.

If the Administrator determines, pursuant to this subpart, that there has been a violation of the terms of the agreement, he may bar a grantee or operator from the receipt of further financial assistance for mass transportation facilities and equipment.

§ 605.35 Judicial review.

The determination of the Administrator pursuant to this subpart shall be final and conclusive on all parties, but shall be subject to judicial review pursuant to title 5 U.S.C. 701–706.

Subpart E—Reporting and Records

§ 605.40 Reports and information.

The Administrator may order any grantee or operator for the grantee, to file special or separate reports setting forth information relating to any transportation service rendered by such grantee or operator, in addition to any other reports required by this part.

APPENDIX A TO PART 605

COMPTROLLER GENERAL OF THE UNITED STATES,
Washington, DC, December 7, 1966.

DEAR MR. WILSON: The enclosure with your letter of October 4, 1966, concerns the legality of providing a grant under the Federal Mass Transit Act of 1964 to the City of San Diego, (City), California. The problem involved arises in connection with the definition in subsection 9(d)(5) of the Act, 49 U.S.C. 1608(d)(5), excluding charter or sightseeing service from the term ''mass transportation.''

It appears from the enclosure with your letter that the City originally included in its grant application a request for funds to purchase 8 buses designed for charter service. Subsequently the City amended its application by deleting a request for a portion of the funds attributable to the charter bus coaches. However, in addition to the 8 specially designed charter buses initially applied for, the City allegedly uses about 40 of its transit type buses to a substantial extent for charter-type services. In light of these factors surrounding the application by the City, the enclosure requests our opinion with regard to the legality of grants under the Act as it applies to certain matters (in effect questions), which are numbered and quoted below and answered in the order presented.

Number one:

''The grant of funds to a City to purchase buses and equipment which are intended for substantial use in the general charter bus business as well as in the Mass Transportation type business.''

The Federal Mass Transit Act of 1964 does not authorize grants to assist in the purchase of buses or other equipment for any service other than urban mass transportation service. Section 3(a) of the Act limits the range of eligible facilities and equipment to ''* * * buses and other rolling stock, and other real or personal property needed for an efficient and coordinated mass transportation system.'' In turn, ''mass transportation'' is defined, in section 9(d)(5) of the Act, specifically to exclude charter service. We are advised by the Department of Housing and Urban Development (HUD) that under these provisions, the Department has limited its grants to the purchase of buses of types suitable to meet the needs of the particular kind of urban mass transportation proposed to be furnished by the applicant.''

HUD further advises that:

''One of the basic facts of urban mass transportation operations is that the need for rolling stock is far greater during the morning and evening rush hours on weekdays than at any other time. For that reason, any system which has sufficient rolling stock to meet the weekday rush-hour needs of its customers must have a substantial amount of equipment standing idle at other times, as well as drivers and other personnel being paid when there is little for them to do. To relieve this inefficient and uneconomical situation, quite a number of cities have offered incidental charter service using this idle equipment and personnel during the hours when the same are not needed for regularly scheduled runs. Among the cities so doing are Cleveland, Pittsburgh, Alameda, Tacoma, Detroit and Dallas.

''Such service contributes to the success of urban mass transportation operations by bringing in additional revenues and providing full employment to drivers and other employees. It may in some cases even reduce the need for Federal capital grant assistance.

''We do not consider that there is any violation of either the letter or the spirit of the Act as a result of such incidental use f buses in charter service. To guard against abuses, every capital facilities grant contract made by this Department contains the following provisions:

'' ''Sec. 4. *Use of Project Facilities and Equipment*—The Public Body agrees that the

Project facilities and equipment will be used for the provision of mass transportation service within its urban area for the period of the useful life of such facilities and equipment. . . . The Public Body further agrees that during the useful life of the Project facilities and equipment it will submit to HUD such financial statements and other data as may be deemed necessary to assure compliance with this Section.' ''

It is our view that grants may be made to a city under section 3(a) of the Act to purchase buses needed by the city for an efficient and coordinated mass transportation system, even though the city may intend to use such buses for charter use when the buses are not needed on regularly scheduled runs (i.e. for mass transportation purposes) and would otherwise be idle.

Number two:

''Whether a grant of such funds is proper if charter bus use is incidental to mass public transportation operations. If so, what is the definition of *incidental use*.''

We are advised by HUD that under its legislative authority, it cannot and does not take charter service requirements into consideration in any way in evaluating the needs of a local mass transportation system for buses or other equipment.

HUD further advises that:

''However, as indicated above, we are of the opinion that any lawful use of project equipment which does not detract from or interfere with the urban mass transportation service for which the equipment is needed would be deemed an incidental use of such equipment, and that such use of project equipment is entirely permissible under our legislation. What uses are in fact incidental, under this test, can be determined only on a case-by-case basis.''

In view of what we stated above in answer to the first question, the first part of question two is answered in the affirmative.

As to the second part of the question, in *Security National Insurance Co.* v. *Secuoyah Marina,* 246F.2d 830, ''incident'' is defined as meaning ''that which appertains to something else which is primary.'' Thus, we cannot say HUD's definition of *incidental use* as set forth above is unreasonable. Under the Act involved grants may be made to purchase buses only if the buses are needed for an efficient and coordinated mass transportation system. It would appear that if buses are purchased in order to meet this need, and are, in fact, used to meet such need, the use of such buses for charter service when not needed for mass transportation services would, in effect, be an ''incidental use,'' insofar as pertinent here. In our opinion such incidental use would not violate the provisions of the 1964 Act.

Number three:

''The grant of funds for mass public transportation purposes to a City which has expressed an intent to engage in the general charter bus business when such funds would in effect constitute a subsidy to the City of its intended charter bus operations; i.e. freeing Municipal funds with which to purchase charter bus equipment.''

Section 4(a) of the 1954 Act (49 U.S.C. 1603(a)) provides, in part, as follows:

''* * * The Administrator (now Secretary), on the basis of engineering studies, studies of economic feasibility, and data showing the nature and extent of expected utilization of the facilities and equipment, shall estimate what portion of the cost of a project to be assisted under section 1602 of this title cannot be reasonably financed from revenues—which portion shall hereinafter be called 'net project cost'. The Federal grant for such a project shall not exceed two-thirds of the net project cost. The remainder of the net project cost shall be provided, in cash, from sources other than Federal funds * * *.''

It is clear from the legislative history of the Act involved that the ''revenues'' to be considered are mass transportation system revenues including any revenues from incidental charter operations. There is nothing in the language of the Act which requires HUD to take into account the status of the general funds of an applicant city in determining how much capital grant assistance to extend to that city.

It should be noted that in a sense nearly every capital grant to a city constitutes a partial subsidy of every activity of the city which is supported by tax revenues, since it frees tax revenues for such other uses.

Number four:

''With specific reference to the application of the City of San Diego for funds under its application to the Department of Housing and Urban Development dated June 2, 1966, whether the Act permits a grant to purchase equipment wherein 25 percent of such equipment will be used either exclusively or substantially in the operation of charter bus services.''

As to the City of San Diego's grant application, we have been advised by HUD as follows:

''As explained above, the Act authorizes assistance only for facilities to be used in mass transportation service. We could not, therefore, assist San Diego in purchasing any equipment to be used 'exclusively' in the operation of charter bus service. Furthermore, as also explained above, assisted mass transportation equipment can be used only incidentally for such charter services.

''Whether equipment used 'substantially' in such service qualifies under this rule can be answered only in the light of the specifics of the San Diego situation. * * * we have already, during our preliminary review of the City's application, disallowed about $150,000

of the proposed project cost which was allocated to the purchase of eight charter-type buses.

''The final application of the City of San Diego is presently under active consideration by this Department. In particular, we have requested the City to furnish additional information as to the nature and extent of the proposed use, if any, of project facilities and equipment in charter service, so that we can further evaluate the application under the criteria above set forth. We have also requested similar information from Mr. Fredrick J. Ruane, who has filed a taxpayers' suit (Superior Court for San Diego County Civil #297329) against the City, contesting its authority to engage in charter bus operations.''

As indicated above, it is clear that under the Act in question grants may not legally be made to purchase buses to be used ''exclusively'' in the operation of charter bus service. However, in view of the purposes of the Act involved it is our opinion that a city which has purchased with grant funds buses needed for an efficient mass transportation system, is not precluded by the act from using such buses for charter service during idle or off-peak periods when the buses are not needed for regularly scheduled runs. As indicated above, such a use would appear to be an incidental use.

The fourth question is answered accordingly.

As requested, the correspondence enclosed with your letter is returned herewith.

Sincerely yours,

FRANK H. WEITZEL,
Assistant Comptroller General of the United States.

Enclosures:

The Honorable Bob Wilson, House of Representatives.

MARCH 29, 1976.

INFLATIONARY IMPACT STATEMENT

FINAL REGULATIONS ON SCHOOL BUS OPERATIONS

I certify that, in accordance with Executive Order 11821, dated November 27, 1974, and Departmental implementing instructions, an Inflationary Impact Statement is not required for final regulations on School Bus Operations.

ROBERT E. PATRICELLI,
Federal Mass Transit Administrator.

PART 609—TRANSPORTATION FOR ELDERLY AND HANDICAPPED PERSONS

Sec.
609.1 Purpose.
609.3 Definitions.
609.5 Applicability.
609.23 Reduced fare.

APPENDIX A TO PART 609—ELDERLY AND HANDICAPPED

AUTHORITY: 49 U.S.C. 5307(d) and 5308(b); 23 U.S.C. 134, 135 and 142; 29 U.S.C. 794; 49 CFR 1.51.

SOURCE: 41 FR 18239, Apr. 30, 1976, unless otherwise noted.

§ 609.1 Purpose.

The purpose of this part is to establish formally the requirements of the Federal Transit Administration (FTA) on transportation for elderly and handicapped persons.

§ 609.3 Definitions.

As used herein:

Elderly and handicapped persons means those individuals who, by reason of illness, injury, age, congenital malfunction, or other permanent or temporary incapacity or disability, including those who are nonambulatory wheelchair-bound and those with semi-ambulatory capabilities, are unable without special facilities or special planning or design to utilize mass transportation facilities and services as effectively as persons who are not so affected.

§ 609.5 Applicability.

This part, which applies to projects approved by the Federal Transit Administrator on or after May 31, 1976, applies to all planning, capital, and operating assistance projects receiving Federal financial assistance under sections 5307 or 5308 of the Federal transit laws (49 U.S.C. Chapter 53), and non-highway public mass transportation projects receiving Federal financial assistance under: (1) Subsection (a) or (c) of section 142 of title 23, United States Code; and (2) paragraph (4) of subsection (e) of section 103, title 23, United States Code. However, under

certain circumstances evident in §§ 609.13 through 609.21, the latter sections apply to fixed facilities and vehicles included in projects approved before May 31, 1976. Sections in this part on capital assistance applications, fixed facilities, and vehicles apply expressly to capital assistance projects receiving Federal financial assistance under any of the above statutes.

[41 FR 18239, Apr. 30, 1976, as amended at 61 FR 19562, May 2, 1996]

§ 609.23 Reduced fare.

Applicants for financial assistance under section 5307 of the Federal transit laws (49 U.S.C. Chapter 53), must, as a condition to receiving such assistance, give satisfactory assurances, in such manner and form as may be required by the Federal Transit Administrator and in accordance with such terms and conditions as the Federal Transit Administrator may prescribe, that the rates charged elderly and handicapped persons during non-peak hours for transportation utilizing or involving the facilities and equipment of the project financed with assistance under this section will not exceed one-half of the rates generally applicable to other persons at peak hours, whether the operation of such facilities and equipment is by the applicant or is by another entity under lease or otherwise.

[41 FR 18239, Apr. 30, 1976, as amended at 61 FR 19562, May 2, 1996]

APPENDIX A TO PART 609—ELDERLY AND HANDICAPPED

The definitions of the term *elderly and handicapped* as applied under FTA's elderly and handicapped half-fare program (49 CFR part 609) shall apply to this rule. This permits a broader class of handicapped persons to take advantage of the exception than would be permitted under the more restrictive definition applied to the non-discrimination provisions of the Department's section 504 program (49 CFR 27.5), which includes only handicapped persons otherwise unable to use the recipient's bus service for the general public.

Accordingly, for the purposes of this part, the definition of *elderly persons* may be determined by the FTA recipient but must, at a minimum, include all persons 65 years of age or over.

Similarly, the definition of *handicapped persons* is derived from the existing regulations at 49 CFR 609.3 which provide that *Handicapped persons* means those individuals who, by reason of illness, injury, age, congenital malfunction, or other permanent or temporary incapacity or disability, including those who are nonambulatory wheelchair-bound and those with semi-ambulatory capabilities, are unable without special facilities or special planning or design to utilize mass transportation facilities and services as effectively as persons who are not so affected.

To assist in understanding how the definitions might be applied to administration of the charter rule, the following questions and answers previously published by FTA for the half-fare program in FTA C 9060.1, April 20, 1978, are reproduced:

1. *Question:* Can the definition of *elderly* or *handicapped* be restricted on the basis of residency, citizenship, income, employment status, or the ability to operate an automobile?

Answer: No. Section 5(m) is applicable to *elderly and handicapped persons*. It is FTA's policy that such categorical exceptions are not permitted under the Act.

2. *Question:* Can the eligibility of *temporary handicaps* be restricted on the basis of their duration?

Answer: Handicaps of less than 90 days duration may be excluded. Handicaps of more than 90 days duration must be included.

3. *Question:* Can the definition of *handicap* be limited in any way?

Answer: FTA has allowed applicants to exclude some conditions which appear to meet the functional definition of *handicap* provided in section 5302(a)(5) of the Federal transit laws (49 U.S.C. Chapter 53). These include pregnancy, obesity, drug or alcohol addiction, and certain conditions which do not fall under the statutory definition (e.g., loss of a finger, some chronic heart or lung conditions, controlled epilepsy, etc.). Individuals may also be excluded whose handicap involves a contagious disease or poses a danger to the individual or other passengers. Other exceptions should be reviewed on a case-by-case basis.

4. *Question:* Is blindness considered a handicap under Section 5(m)?

Answer: Yes.

5. *Question:* Is deafness considered a handicap under section 5(m)?

Answer: As a rule, no, because deafness, especially on buses, is not considered a disability which requires special planning, facilities, or design. However, deafness is recognized as a handicap in the Department of Transportation's ADA regulation, and applicants for Section 5 assistance are encouraged to include the deaf as eligible for off-peak half-fares.

6. *Question:* Is mental illness considered a handicap under section 5(m)?

Answer: As a rule, no, because of the difficulty in establishing criteria or guidelines for defining eligibility. However, FTA encourages applicants to provide the broadest possible coverage in defining eligible handicaps, including mental illness.

7. *Question:* Can operators delegate the responsibility for certifying individuals as eligible to other agencies?

Answer: Yes, provided that such agencies administer the certification of individuals in an acceptable manner and are reasonably accessible to the elderly and handicapped. Many operators currently make extensive use of social service agencies (both public and private) to identify and certify eligible individuals.

8. *Question:* Can operators require elderly and handicapped individuals to be recognized by any existing agency (e.g., require that handicapped persons be receiving Social Service or Veterans' Administration benefits)?

Answer: Recognition by such agencies is commonly used to certify eligible individuals. However, such recognition should not be a mandatory prerequisite for eligibility. For example, many persons with eligible temporary handicaps may not be recognized as handicapped by social service agencies.

9. *Question:* Can the operator require that elderly and handicapped persons come to a central office to register for an off-peak half-fare program?

Answer: FTA strongly encourages operators to develop procedures which maximize the availability of off-peak half-fares to eligible individuals. Requiring individuals to travel to a single office which may be inconveniently located is not consistent with this policy, although it is not strictly prohibited. FTA reserves the right to review such local requirements on a case-by-case basis.

10. *Question:* Must ID cards issued by one operator be transferable to another?

Answer: No. However, FTA encourages consistency among off-peak procedures and the maximizing of availability to eligible individuals, especially among operators within a single urban area. Nevertheless, each operator is permitted to require its own certification of individuals using its service.

11. *Question:* Can an operator require an elderly or handicapped person to submit to a procedure certifying their eligibility before they can receive half-fare? For example, if an operator requires eligible individuals to have a special ID card, can the half-fare be denied to an individual who can otherwise give proof of age, etc, but does not have an ID card?

Answer: Yes, although FTA does not endorse this practice.

[53 FR 53356, Dec. 30, 1988. Redesignated and amended at 61 FR 19562, May 2, 1996]

PART 611—MAJOR CAPITAL INVESTMENT PROJECTS

Sec.
611.1 Purpose and contents.
611.3 Applicability.
611.5 Definitions.
611.7 Relation to planning and project development processes.
611.9 Project justification criteria for grants and loans for fixed guideway systems.
611.11 Local financial commitment criteria.
611.13 Overall project ratings.
APPENDIX A TO PART 611—DESCRIPTION OF MEASURES FOR PROJECT EVALUATION.

AUTHORITY: 49 U.S.C. 5309; 49 CFR 1.51

SOURCE: 65 FR 76880, Dec. 7, 2000, unless otherwise noted.

§ 611.1 Purpose and contents.

(a) This part prescribes the process that applicants must follow to be considered eligible for capital investment grants and loans for new fixed guideway systems or extensions to existing systems (''new starts''). Also, this part prescribes the procedures used by FTA to evaluate proposed new starts projects as required by 49 U.S.C. 5309(e), and the scheduling of project reviews required by 49 U.S.C. 5328(a).

(b) This part defines how the results of the evaluation described in paragraph (a) of this section will be used to:

(1) Approve entry into preliminary engineering and final design, as required by 49 U.S.C. 309(e)(6);

(2) Rate projects as ''highly recommended,'' ''recommended,'' or ''not recommended,'' as required by 49 U.S.C. 5309(e)(6);

(3) Assign individual ratings for each of the project justification criteria specified in 49 U.S.C. 5309(e)(1)(B) and (C);

(4) Determine project eligibility for Federal funding commitments, in the form of Full Funding Grant Agreements;

(5) Support funding recommendations for this program for the Administration's annual budget request; and

(6) Fulfill the reporting requirements under 49 U.S.C. 5309(o)(1), Funding Levels and Allocations of Funds, Annual Report, and 5309(o)(2), Supplemental Report on New Starts.

(c) The information collected and ratings developed under this part will form the basis for the annual reports to Congress, required by 49 U.S.C. 5309(o)(1) and (2).

§611.3 Applicability.

(a) This part applies to all proposals for Federal capital investment funds under 49 U.S.C. 5309 for new transit fixed guideway systems and extensions to existing systems.

(b) Projects described in paragraph (a) of this section are not subject to evaluation under this part if the total amount of funding from 49 U.S.C. 5309 will be less than $25 million, or if such projects are otherwise exempt from evaluation by statute.

(1) Exempt projects must still be rated by FTA for purposes of entering into a Federal funding commitment as required by 49 U.S.C. 5309(e)(7). Sponsors who believe their projects to be exempt are nonetheless strongly encouraged to submit data for project evaluation as described in this part.

(2) Such projects are still subject to the requirements of 23 CFR part 450 and 23 CFR part 771.

(3) This part does not apply to projects for which a Full Funding Grant Agreement (FFGA) has already been executed.

(c) Consistent with 49 U.S.C. 5309(e)(8)(B), FTA will make project approval decisions on proposed projects using expedited procedures as appropriate, for proposed projects that are:

(1) Located in a nonattainment area;

(2) Transportation control measures as defined by the Clean Air Act (42 U.S.C. 7401 *et seq.*); and

(3) Required to carry out a State Implementation Plan.

§611.5 Definitions.

The definitions established by Titles 12 and 49 of the United States Code, the Council on Environmental Quality's regulation at 40 CFR parts 1500–1508, and FHWA–FTA regulations at 23 CFR parts 450 and 771 are applicable. In addition, the following definitions apply:

Alternatives analysis is a corridor level analysis which evaluates all reasonable mode and alignment alternatives for addressing a transportation problem, and results in the adoption of a locally preferred alternative by the appropriate State and local agencies and official boards through a public process.

Baseline alternative is the alternative against which the proposed new starts project is compared to develop project justification measures. Relative to the no build alternative, it should include transit improvements lower in cost than the new start which result in a better ratio of measures of transit mobility compared to cost than the no build alternative.

BRT means bus rapid transit.

Bus Rapid Transit refers to coordinated improvements in a transit system's infrastructure, equipment, operations, and technology that give preferential treatment to buses on fixed guideways and urban roadways. The intention of Bus Rapid Transit is to reduce bus travel time, improve service reliability, increase the convenience of users, and ultimately, increase bus ridership.

Extension to existing fixed-guideway system means a project to extend an existing fixed guideway system.

FFGA means a Full Funding Grant Agreement.

Final Design is the final phase of project development, and includes (but is not limited to) the preparation of final construction plans (including construction management plans), detailed specifications, construction cost estimates, and bid documents.

Fixed guideway system means a mass transportation facility which utilizes and occupies a separate right-of-way, or rail line, for the exclusive use of mass transportation and other high occupancy vehicles, or uses a fixed catenary system and a right of way usable by other forms of transportation. This includes, but is not limited to, rapid rail, light rail, commuter rail, automated guideway transit, people movers, ferry boat service, and fixed-guideway facilities for buses (such as bus rapid transit) and other high occupancy vehicles. A *new fixed guideway system* means a newly-constructed fixed

guideway system in a corridor or alignment where no such system exists.

FTA means the Federal Transit Administration.

Full Funding Grant Agreement means an instrument that defines the scope of a project, the Federal financial contribution, and other terms and conditions.

Major transit investment means any project that involves the construction of a new fixed guideway system or extension of an existing fixed guideway system for use by mass transit vehicles.

NEPA process means those procedures necessary to meet the requirements of the National Environmental Policy Act of 1969, as amended (NEPA), at 23 CFR part 771; the NEPA process is completed when a Record of Decision (ROD) or Finding of No Significant Impact (FONSI) is issued.

New start means a new fixed guideway system, or an extension to an existing fixed guideway system.

Preliminary Engineering is the process by which the scope of the proposed project is finalized, estimates of project costs, benefits and impacts are refined, NEPA requirements are completed, project management plans and fleet management plans are further developed, and local funding commitments are put in place.

Secretary means the Secretary of Transportation.

TEA–21 means the Transportation Equity Act for the 21st Century.

§ 611.7 Relation to planning and project development processes.

All new start projects proposed for funding assistance under 49 USC 5309 must emerge from the metropolitan and Statewide planning process, consistent with 23 CFR part 450. To be eligible for FTA capital investment funding, a proposed project must be based on the results of alternatives analysis and preliminary engineering.

(a) *Alternatives Analysis.* (1) To be eligible for FTA capital investment funding for a major fixed guideway transit project, local project sponsors must perform an alternatives analysis.

(2) The alternatives analysis develops information on the benefits, costs, and impacts of alternative strategies to address a transportation problem in a given corridor, leading to the adoption of a locally preferred alternative.

(3) The alternative strategies evaluated in an alternatives analysis must include a no-build alternative, a baseline alternative, and an appropriate number of build alternatives. Where project sponsors believe the no-build alternative fulfills the requirements for a baseline alternative, FTA will determine whether to require a separate baseline alternative on a case-by-case basis.

(4) The locally preferred alternative must be selected from among the evaluated alternative strategies and formally adopted and included in the metropolitan planning organization's financially-constrained long-range regional transportation plan.

(b) *Preliminary Engineering.* Consistent with 49 USC 5309(e)(6) and 5328(a)(2), FTA will approve/disapprove entry of a proposed project into preliminary engineering within 30 days of receipt of a formal request from the project sponsor(s).

(1) A proposed project can be considered for advancement into preliminary engineering only if:

(i) Alternatives analysis has been completed

(ii) The proposed project is adopted as the locally preferred alternative by the Metropolitan Planning Organization into its financially constrained metropolitan transportation plan;

(iii) Project sponsors have demonstrated adequate technical capability to carry out preliminary engineering for the proposed project; and

(iv) All other applicable Federal and FTA program requirements have been met.

(2) FTA's approval will be based on the results of its evaluation as described in §§ 611.9–611.13.

(3) At a minimum, a proposed project must receive an overall rating of ''recommended'' to be approved for entry into preliminary engineering.

(4) This part does not in any way revoke prior FTA approvals to enter preliminary engineering made prior to February 5, 2001.

(5) Projects approved to advance into preliminary engineering receive blanket pre-award authority to incur

project costs for preliminary engineering activities prior to grant approval.

(i) This pre-award authority does not constitute a commitment by FTA that future Federal funds will be approved for this project.

(ii) All Federal requirements must be met prior to incurring costs in order to retain eligibility of the costs for future FTA grant assistance.

(c) *Final Design*. Consistent with 49 USC 5309(e)(6) and 5328(a)(3), FTA will approve/disapprove entry of a proposed project into final design within 120 days of receipt of a formal request from the project sponsor(s).

(1) A proposed project can be considered for advancement into final design only if:

(i) The NEPA process has been completed;

(ii) Project sponsors have demonstrated adequate technical capability to carry out final design for the proposed project; and

(iii) All other applicable Federal and FTA program requirements have been met.

(2) FTA's approval will be based on the results of its evaluation as described in Parts §§611.9–611.13 of this Rule.

(3) At a minimum, a proposed project must receive an overall rating of ''recommended'' to be approved for entry into final design.

(4) Consistent with the Government Performance and Results Act of 1993, project sponsors seeking FFGAs shall submit a complete plan for collection and analysis of information to identify the impacts of the new start project and the accuracy of the forecasts prepared during development of the project.

(i) The plan shall provide for: Collection of ''before'' data on the current transit system; documentation of the ''predicted'' scope, service levels, capital costs, operating costs, and ridership of the project; collection of ''after'' data on the transit system two years after opening of the new start project; and analysis of the consistency of ''predicted'' project characteristics with the ''after'' data.

(ii) The ''before'' data collection shall obtain information on transit service levels and ridership patterns, including origins and destinations, access modes, trip purposes, and rider characteristics. The ''after'' data collection shall obtain analogous information on transit service levels and ridership patterns, plus information on the as-built scope and capital costs of the new start project.

(iii) The analysis of this information shall describe the impacts of the new start project on transit services and transit ridership, evaluate the consistency of ''predicted'' and actual project characteristics and performance, and identify sources of differences between ''predicted'' and actual outcomes.

(iv) For funding purposes, preparation of the plan for collection and analysis of data is an eligible part of the proposed project.

(5) Project sponsors shall collect data on the current system, according to the plan required under §611.7(c)(4) as approved by FTA, prior to the beginning of construction of the proposed new start. Collection of this data is an eligible part of the proposed project for funding purposes.

(6) This part does not in any way revoke prior FTA approvals to enter final design that were made prior to February 5, 2001.

(7) Projects approved to advance into final design receive blanket pre-award authority to incur project costs for final design activities prior to grant approval.

(i) This pre-award authority does not extend to right of way acquisition or construction, nor does it constitute a commitment by FTA that future Federal funds will be approved for this project.

(ii) All Federal requirements must be met prior to incurring costs in order to retain eligibility of the costs for future FTA grant assistance.

(d) *Full funding grant agreements*. (1) FTA will determine whether to execute an FFGA based on:

(i) The evaluations and ratings established by this rule;

(ii) The technical capability of project sponsors to complete the proposed new starts project; and

(iii) A determination by FTA that no outstanding issues exist that could interfere with successful implementation of the proposed new starts project.

(2) An FFGA shall not be executed for a project that is not authorized for final design and construction by Federal law.

(3) FFGAs will be executed only for those projects which:

(i) Are rated as ''recommended'' or ''highly recommended;''

(ii) Have completed the appropriate steps in the project development process;

(iii) Meet all applicable Federal and FTA program requirements; and

(iv) Are ready to utilize Federal new starts funds, consistent with available program authorization.

(4) In any instance in which FTA decides to provide financial assistance under section 5309 for construction of a new start project, FTA will negotiate an FFGA with the grantee during final design of that project. Pursuant to the terms and conditions of the FFGA:

(i) A maximum level of Federal financial contribution under the section 5309 new starts program will be fixed;

(ii) The grantee will be required to complete construction of the project, as defined, to the point of initiation of revenue operations, and to absorb any additional costs incurred or necessitated;

(iii) FTA and the grantee will establish a schedule for anticipating Federal contributions during the final design and construction period; and

(iv) Specific annual contributions under the FFGA will be subject to the availability of budget authority and the ability of the grantee to use the funds effectively.

(5) The total amount of Federal obligations under Full Funding Grant Agreements and potential obligations under Letters of Intent will not exceed the amount authorized for new starts under 49 U.S.C. § 5309.

(6) FTA may also make a ''contingent commitment,'' which is subject to future congressional authorizations and appropriations, pursuant to 49 U.S.C. 5309(g), 5338(b), and 5338(h).

(7) Consistent with the Government Performance and Results Act of 1993 (GPRA), the FFGA will require implementation of the data collection plan prepared in accordance with § 611.7(c)(4):

(i) Prior to the beginning of construction activities the grantee shall collect the ''before'' data on the existing system, if such data has not already been collected as part of final design, and document the predicted characteristics and performance of the project.

(ii) Two years after the project opens for revenue service, the grantee shall collect the ''after'' data on the transit system and the new start project, determine the impacts of the project, analyze the consistency of the ''predicted'' performance of the project with the ''after'' data, and report the findings and supporting data to FTA.

(iii) For funding purposes, collection of the ''before'' data, collection of the ''after'' data, and the development and reporting of findings are eligible parts of the proposed project.

(8) This part does not in any way alter, revoke, or require re-evaluation of existing FFGAs that were issued prior to February 5, 2001.

§ 611.9 Project justification criteria for grants and loans for fixed guideway systems.

In order to approve a grant or loan for a proposed new starts project under 49 U.S.C. 5309, and to approve entry into preliminary engineering and final design as required by section 5309(e)(6), FTA must find that the proposed project is justified as described in section 5309(e)(1)(B).

(a) To make the statutory evaluations and assign ratings for project justification, FTA will evaluate information developed locally through alternatives analyses and refined through preliminary engineering and final design.

(1) The method used to make this determination will be a multiple measure approach in which the merits of candidate projects will be evaluated in terms of each of the criteria specified by this section.

(2) The measures for these criteria are specified in Appendix A to this rule.

(3) The measures will be applied to the project as it has been proposed to FTA for new starts funding under 49 U.S.C. 5309.

(4) The ratings for each of the criteria will be expressed in terms of descriptive indicators, as follows: ''high,'' ''medium-high,'' ''medium,'' ''low-medium,'' or ''low.''

(b) The criteria are as follows:

(1) Mobility Improvements.

(2) Environmental Benefits.

(3) Operating Efficiencies.

(4) Transportation System User Benefits (Cost-Effectiveness).

(5) Existing land use, transit supportive land use policies, and future patterns.

(6) Other factors. Additional factors, including but not limited to:

(i) The degree to which the programs and policies (e.g., parking policies, etc.) are in place as assumed in the forecasts,

(ii) Project management capability, including the technical capability of the grant recipient to construct the project, and

(iii) Additional factors relevant to local and national priorities and relevant to the success of the project.

(c) In evaluating proposed new starts projects under these criteria:

(1) As a candidate project proceeds through preliminary engineering and final design, a greater degree of certainty is expected with respect to the scope of the project and a greater level of commitment is expected with respect to land use.

(2) For the criteria under §611.9(b)(1)–(4), the proposed new start will be compared to the baseline alternative.

(d) In evaluating proposed new starts projects under these criteria, the following factors shall be considered:

(1) The direct and indirect costs of relevant alternatives;

(2) Factors such as congestion relief, improved mobility, air pollution, noise pollution, energy consumption, and all associated ancillary and mitigation costs necessary to carry out each alternative analyzed, and recognize reductions in local infrastructure costs achieved through compact land use development;

(3) Existing land use, mass transportation supportive land use policies, and future patterns;

(4) The degree to which the project increases the mobility of the mass transportation dependent population or promotes economic development;

(5) Population density and current transit ridership in the corridor;

(6) The technical capability of the grant recipient to construct the project;

(7) Differences in local land, construction, and operating costs; and

(8) Other factors as appropriate.

(e) FTA may amend the measures for these criteria, pending the results of ongoing studies regarding transit benefit evaluation methods.

(f) The individual ratings for each of the criteria described in this section will be combined into a summary rating of ''high,'' ''medium-high,'' ''medium,'' ''low-medium,'' or ''low'' for project justification. ''Other factors'' will be considered as appropriate.

§611.11 Local financial commitment criteria.

In order to approve a grant or loan under 49 U.S.C. 5309, FTA must find that the proposed project is supported by an acceptable degree of local financial commitment, as required by section 5309(e)(1)(C). The local financial commitment to a proposed project will be evaluated according to the following measures:

(a) The proposed share of project capital costs to be met using funds from sources other than the section 5309 new starts program, including both the non-Federal match required by Federal law and any additional capital funding (''overmatch''), and the degree to which planning and preliminary engineering activities have been carried out without funding from the section 5309 new starts program;

(b) The stability and reliability of the proposed capital financing plan for the new starts project; and

(c) The stability and reliability of the proposed operating financing plan to fund operation of the entire transit system as planned over a 20-year planning horizon.

(d) For each proposed project, ratings for paragraphs (b) and (c) of this section will be reported in terms of descriptive indicators, as follows: ''high,'' ''medium-high,'' ''medium,'' ''low-medium,'' or ''low.'' For paragraph (a) of this section, the percentage of Federal

funding sought from 49 U.S.C. § 5309 will be reported.

(e) The summary ratings for each measure described in this section will be combined into a summary rating of ''high,'' ''medium-high,'' ''medium,'' ''low-medium,'' or ''low'' for local financial commitment.

§ 611.13 Overall project ratings.

(a) The summary ratings developed for project justification local financial commitment (§§ 611.9 and 611.11) will form the basis for the overall rating for each project.

(b) FTA will assign overall ratings of ''highly recommended,'' ''recommended,'' and ''not recommended,'' as required by 49 U.S.C. 5309(e)(6), to each proposed project.

(1) These ratings will indicate the overall merit of a proposed new starts project at the time of evaluation.

(2) Ratings for individual projects will be updated annually for purposes of the annual report on funding levels and allocations of funds required by section 5309(o)(1), and as required for FTA approvals to enter into preliminary engineering, final design, or FFGAs.

(c) These ratings will be used to:

(1) approve advancement of a proposed project into preliminary engineering and final design;

(2) Approve projects for FFGAs;

(3) Support annual funding recommendations to Congress in the annual report on funding levels and allocations of funds required by 49 U.S.C. 5309(o)(1); and

(4) For purposes of the supplemental report on new starts, as required under section 5309(o)(2).

(d) FTA will assign overall ratings for proposed new starts projects based on the following conditions:

(1) Projects will be rated as ''recommended'' if they receive a summary rating of at least ''medium'' for both project justification (§ 611.9) and local financial commitment (§ 611.11);

(2) Projects will be rated as ''highly recommended'' if they receive a summary rating higher than ''medium'' for both local financial commitment and project justification.

(3) Projects will be rated as ''not recommended'' if they do not receive a summary rating of at least ''medium'' for both project justification and local financial commitment.

APPENDIX A TO PART 611—DESCRIPTION OF MEASURES USED FOR PROJECT EVALUATION.

PROJECT JUSTIFICATION

FTA will use several measures to evaluate candidate new starts projects according to the criteria established by 49 U.S.C. 5309(e)(1)(B). These measures have been developed according to the considerations identified at 49 U.S.C. 5309(e)(3) (''Project Justification''), consistent with Executive Order 12893. From time to time, FTA has published technical guidance on the application of these measures, and the agency expects it will continue to do so. Moreover, FTA may well choose to amend these measures, pending the results of ongoing studies regarding transit benefit evaluation methods. The first four criteria listed below assess the benefits of a proposed new start project by comparing the project to the baseline alternative. Therefore, the baseline alternative must be defined so that comparisons with the new start project isolate the costs and benefits of the major transit investment. At a minimum, the baseline alternative must include in the project corridor all reasonable cost-effective transit improvements short of investment in the new start project. Depending on the circumstances and through prior agreement with FTA, the baseline alternative can be defined appropriately in one of three ways. First, where the adopted financially constrained regional transportation plan includes within the corridor all reasonable cost-effective transit improvements short of the new start project, a no-build alternative that includes those improvements may serve as the baseline. Second, where additional cost-effective transit improvements can be made beyond those provided by the adopted plan, the baseline will add those cost-effective transit improvements. Third, where the proposed new start project is part of a multimodal alternative that includes major highway components, the baseline alternative will be the preferred multimodal alternative without the new start project and associated transit services. Prior to submittal of a request to enter preliminary engineering for the new start project, grantees must obtain FTA approval of the definition of the baseline alternative. Consistent with the requirement that differences between the new start project and the baseline alternative measure only the benefits and costs of the project itself, planning factors external to the new start project and its supporting bus service must be the same for both the baseline and new start project alternatives.

Consequently, the highway and transit networks defined for the analysis must be the same outside the corridor for which the new start project is proposed. Further, policies affecting travel demand and travel costs, such as land use, transit fares and parking costs, must be applied consistently to both the baseline alternative and the new start project alternative. The fifth criterion, ''existing land use, transit supportive land use policies, and future patterns,'' reflects the importance of transit-supportive local land use and related conditions and policies as an indicator of ultimate project success.

(a) Mobility Improvements.

(1) The aggregate travel time savings in the forecast year anticipated from the new start project compared to the baseline alternative. This measure sums the travel time savings accruing to travelers projected to use transit in the baseline alternative, travelers projected to shift to transit because of the new start project, and non-transit users in the new start project who would benefit from reduced traffic congestion.

(i) After September 1, 2001, FTA will employ a revised measure of travel benefits accruing to travelers.

(ii) The revised measure will be based on a multi-modal measure of perceived travel times faced by all users of the transportation system.

(2) The absolute number of existing low income households located within ½-mile of boarding points associated with the proposed system increment.

(3) The absolute number of existing jobs within ½-mile of boarding points associated with the proposed system increment.

(b) Environmental Benefits.

(1) The forecast change in criteria pollutant emissions and in greenhouse gas emissions, ascribable to the proposed new investment, calculated in terms of annual tons for each criteria pollutant or gas (forecast year), compared to the baseline alternative;

(2) The forecast net change per year (forecast year) in the regional consumption of energy, ascribable to the proposed new investment, expressed in British Thermal Units (BTU), compared to the baseline alternative; and

(3) Current Environmental Protection Agency designations for the region's compliance with National Ambient Air Quality Standards.

(c) Operating Efficiencies. The forecast change in operating cost per passenger-mile (forecast year), for the entire transit system. The new start will be compared to the baseline alternative.

(d) Transportation System User Benefits (Cost-Effectiveness).

(1) The cost effectiveness of a proposed project shall be evaluated according to a measure of transportation system user benefits, based on a multimodal measure of perceived travel times faced by all users of the transportation system, for the forecast year, divided by the incremental cost of the proposed project. Incremental costs and benefits will be calculated as the differences between the proposed new start and the baseline alternative.

(2) Until the effective date of the transportation system user benefits measure of cost effectiveness, cost effectiveness will be computed as the incremental costs of the proposed project divided by its incremental transit ridership, as compared to the baseline alternative.

(i) Costs include the forecast annualized capital and annual operating costs of the entire transit system.

(ii) Ridership includes forecast total annual ridership on the entire transit system, excluding transfers.

(e) Existing land use, transit supportive land use policies, and future patterns. Existing land use, transit-supportive land use policies, and future patterns shall be rated by evaluating existing conditions in the corridor and the degree to which local land use policies are likely to foster transit supportive land use, measured in terms of the kinds of policies in place, and the commitment to these policies. The following factors will form the basis for this evaluation:

(1) Existing land use;

(2) Impact of proposed new starts project on land use;

(3) Growth-management policies;

(4) Transit-supportive corridor policies;

(5) Supportive zoning regulations near transit stations;

(6) Tools to implement land use policies;

(7) The performance of land use policies; and

(8) Existing and planned pedestrian facilities, including access for persons with disabilities.

(f) Other factors. Other factors that will be considered when evaluating projects for funding commitments include, but are not limited to:

(1) Multimodal emphasis of the locally preferred investment strategy, including the proposed new start as one element;

(2) Environmental justice considerations and equity issues,

(3) Opportunities for increased access to employment for low income persons, and Welfare-to-Work initiatives;

(4) Livable Communities initiatives and local economic activities;

(5) Consideration of alternative land use development scenarios in local evaluation and decision making for the locally preferred transit investment decision;

(6) Consideration of innovative financing, procurement, and construction techniques, including design-build turnkey applications; and

(7) Additional factors relevant to local and national priorities and to the success of the project, such as Empowerment Zones, Brownfields, and FTA's Bus Rapid Transit Demonstration Program.

LOCAL FINANCIAL COMMITMENT

FTA will use the following measures to evaluate the local financial commitment to a proposed project:

(a) The proposed share of project capital costs to be met using funds from sources other than the 49 U.S.C. 5309 new starts program, including both the local match required by Federal law and any additional capital funding (''overmatch''). Consideration will be given to:

(i) The use of innovative financing techniques, as described in the May 9, 1995, FEDERAL REGISTER notice on *FTA's Innovative Financing Initiative* (60 FR 24682);

(ii) The use of ''flexible funds'' as provided under the CMAQ and STP programs;

(iii) The degree to which alternatives analysis and preliminary engineering activities were carried out without funding from the § 5309 new starts program; and

(iv) The actual percentage of the cost of recently-completed or simultaneously undertaken fixed guideway systems and extensions that are related to the proposed project under review, from sources other than the section 5309 new starts program (FTA's intent is to recognize that a region's local financial commitment to fixed guideway systems and extensions may not be limited to a single project).

(b) The stability and reliability of the proposed capital financing plan, according to:

(i) The stability, reliability, and level of commitment of each proposed source of local match, including inter-governmental grants, tax sources, and debt obligations, with an emphasis on availability within the project development timetable;

(ii) Whether adequate provisions have been made to cover unanticipated cost overruns and funding shortfalls; and

(iii) Whether adequate provisions have been made to fund the capital needs of the entire transit system as planned, including key station plans as required under 49 CFR 37.47 and 37.51, over a 20-year planning horizon period.

(c) The stability and reliability of the proposed operating financing plan to fund operation of the entire transit system as planned over a 20-year planning horizon.

PART 613—PLANNING ASSISTANCE AND STANDARDS

Subpart A—Metropolitan Transportation Planning and Programming

Sec.
613.100 Metropolitan transportation planning and programming.

Subpart B—Statewide Transportation Planning and Programming

613.200 Statewide transportation planning and programming.

Subpart C—Coordination of Federal and Federally Assisted Programs and Projects

613.300 Coordination of Federal and federally assisted programs and projects.

AUTHORITY: 23 U.S.C. 134, 135, and 217(g); 42 U.S.C. 3334, 4233, 4332, 7410 et seq; 49 U.S.C. 5303–5306, 5323(k); and 49 CFR 1.48(b), 1.51(f) and 21.7(a).

Subpart A—Metropolitan Transportation Planning and Programming

§ 613.100 Metropolitan transportation planning and programming.

The regulations in 23 CFR part 450, subpart C, shall be followed in complying with the requirements of this subpart. 23 CFR part 450, subpart C, requires a metropolitan planning organization (MPO) be designated for each urbanized area and that the metropolitan area have a continuing, cooperative, and comprehensive transportation planning process that results in plans and programs that consider all transportation modes. These plans and programs shall lead to the development of an integrated, intermodal metropolitan transportation system that facilitates the efficient, economic movement of people and goods.

[58 FR 58079, Oct. 28, 1993]

Subpart B—Statewide Transportation Planning and Programming

§ 613.200 Statewide transportation planning and programming.

The regulations in 23 CFR part 450, subpart B, should be followed in complying with the requirements of this subpart. 23 CFR part 450, subpart B, requires each State to carry out an intermodal statewide transportation planning process, including the development of a statewide transportation plan and transportation improvement program that facilitates the efficient, economic movement of people and goods in all areas of the State, including those areas subject to the requirements of 23 U.S.C. 135 and sections 3, 5, 8, 9 and 26 of the Federal Transit Act (49 U.S.C. app. 1602, 1604, 1607, 1607a, and 1622).

[58 FR 58079, Oct. 28, 1993]

Subpart C—Coordination of Federal and Federally Assisted Programs and Projects

§ 613.300 Coordination of Federal and federally assisted programs and projects.

The coordination of Federal and federally assisted programs and projects implementing OMB revised Circular No. A–95, which are set forth in 23 CFR part 420, subpart C, are incorporated into this subpart.

[41 FR 33443, Aug. 9, 1976]

PART 614—TRANSPORTATION INFRASTRUCTURE MANAGEMENT

AUTHORITY: 23 U.S.C. 303; 49 U.S.C. 5303–5305; and 49 CFR 1.48 and 1.51.

SOURCE: 61 FR 67175, Dec. 19, 1996, unless otherwise noted.

§ 614.101 Cross-reference to management systems.

The regulations in 23 CFR Part 500, subparts A and B shall be followed in complying with the requirements of this part. Part 500, subparts A and B implement 23 U.S.C. 303 for State development, establishment, and implementation of systems for managing traffic congestion (CMS), public transportation facilities and equipment (PTMS), intermodal transportation facilities and systems (IMS), and traffic monitoring for highways and public transportation facilities and equipment.

PART 622—ENVIRONMENTAL IMPACT AND RELATED PROCEDURES

Subpart A—Environmental Procedures

Sec.
622.101 Cross-reference to procedures.

Subpart B [Reserved]

Subpart C—Requirements for Energy Assessments

622.301 Buildings.

Subpart A—Environmental Procedures

AUTHORITY: 42 U.S.C. 4321 *et seq.*; 49 U.S.C. 1601 *et seq.;* 49 CFR 1.51.

§ 622.101 Cross-reference to procedures.

The procedures for complying with the National Environmental Policy Act of 1969, as amended (42 U.S.C. 4321 *et seq.*), and related statutes, regulations, and orders are set forth in part 771 of title 23 of the Code of Federal Regulations.

[52 FR 32660, Aug. 28, 1987]

Subpart B [Reserved]

Subpart C—Requirements for Energy Assessments

AUTHORITY: Sec. 403(b), Pub. L. 95–620; E.O. 12185.

§ 622.301 Buildings.

(a) FTA assistance for the construction, reconstruction, or modification of buildings for which applications are submitted to FTA after October 1, 1980, will be approved only after the completion of an energy assessment. An energy assessment shall consist of an analysis of the total energy requirements of a building, within the scope of

the proposed construction activity and at a level of detail appropriate to that scope, which considers:

(1) Overall design of the facility or modification, and alternative designs;

(2) Materials and techniques used in construction or rehabilitation;

(3) Special or innovative conservation features that may be used;

(4) Fuel requirements for heating, cooling, and operations essential to the function of the structure, projected over the life of the facility and including projected costs of this fuel; and

(5) Kind of energy to be used, including:

(i) Consideration of opportunities for using fuels other than petroleum and natural gas, and

(ii) Consideration of using alternative, renewable energy sources.

(b) Compliance with the requirements of paragraph (a) of this section shall be documented as part of the Environmental Assessment or Environmental Impact Statement for projects which are subject to a requirement for one. Projects for which there is no environmental assessment or EIS shall document compliance by submission of appropriate material with the application for FTA assistance for actual construction.

(c) The cost of undertaking and documenting an energy assessment may be eligible for FTA participation if the requirements of Federal Management Circular 74–4 (A–87) are met.

(d) This requirement shall not apply to projects for which the final project application or environmental assessment have been submitted to FTA prior to October 1, 1980.

[45 FR 58038, Aug. 29, 1980]

PART 624—CLEAN FUELS FORMULA GRANT PROGRAM

Sec.
624.1 Eligible applicant.
624.3 Eligible activities.
624.5 Application process.
624.7 Certification.
624.9 Formula.
624.11 Reporting.
APPENDIX A TO PART 624—PRE-APPLICATION WORKSHEET

AUTHORITY: 49 U.S.C. 5308; 49 CFR 1.51.

SOURCE: 67 FR 40104, June 11, 2002, unless otherwise noted.

§ 624.1 Eligible applicant.

(a) An eligible applicant is a designated recipient (designated recipient has the same meaning as in 49 U.S.C. 5307(a)(2)) in either an:

(1) Ozone and carbon monoxide nonattainment areas that have the specific classifications established by the 1990 Clean Air Act Amendments [Public Law 101–549], or

(2) Ozone and carbon monoxide (CO) ''maintenance'' areas that, before they were redesignated to attainment by the Environmental Protection Agency (EPA), had these same classifications.

(b) The nonattainment classifications for ozone are ''marginal,'' ''moderate,'' ''serious,'' ''severe,'' and ''extreme.'' The nonattainment classifications for CO are ''moderate'' and ''serious.''

§ 624.3 Eligible activities.

(a) Eligible activities include the purchase or lease of clean fuel buses and facilities, repowering or retrofitting buses to operate on clean fuels, and the improvement of existing facilities to accommodate clean fuel buses.

(b) The term ''clean fuel vehicle'' means a vehicle that—

(1) Is powered by —

(i) Compressed natural gas;

(ii) Liquefied natural gas;

(iii) Biodiesel fuels;

(iv) Batteries;

(v) Alcohol-based fuels;

(vi) Hybrid electric;

(vii) Fuel cells;

(viii) Clean diesel, to the extent allowed under this section; or

(ix) Other low or zero emissions technology; and

(2) The Administrator of the Environmental Protection Agency has certified sufficiently reduces harmful emissions.

(c) Eligible projects are the following:

(1) Purchasing or leasing clean fuel buses, including buses that employ a lightweight composite primary structure, and vans for use in revenue service. The purchase or lease of non-revenue vehicles is not an eligible project.

(2) Constructing or leasing clean fuel bus facilities or electrical recharging

facilities and related equipment. Facilities and related equipment for clean diesel buses are not eligible.

(3) Improving existing mass transportation facilities to accommodate clean fuel buses.

(4) Repowering pre-1993 engines with clean fuel technology that meets the current urban bus emission standards. Repowering means the removal of an engine from a bus followed by the installation of another engine and applies to engines that are replaced with new, previously unused, engines as well as those exchanged from an inventory of rebuilt engines.

(5) Retrofitting or rebuilding pre-1993 engines if before half life (*e.g.*, prior to six years of bus life) to rebuild; ''retrofit'' means use of the latest after-market technology such as ''upgrade kits,'' or after-treatment devices that treat the exhaust after it has left the engine, such as catalytic converters and particulate filters.

(6) At the discretion of FTA, projects relating to clean fuel, biodiesel, hybrid electric, or zero emissions technology vehicles that achieve emissions reductions equivalent or superior to existing clean fuel or hybrid electric technologies.

§ 624.5 Application process.

(a) Pre-applications must be submitted to the appropriate FTA regional office no later than January 1 of each fiscal year. Subject to the availability of funds, FTA will apportion the funds based on the formula and the pool of applicants, no later than February 1 of each year. Once the applicant has been notified of the apportionment of funds and the eligibility of its application, it should proceed to complete and file the final application. The final application must be submitted electronically if the grantee is using the electronic application process (*i.e.*, TEAM).

(b) The pre-application consists of a Letter of Interest and a Pre-application Worksheet as described as follows:

(1) *Letter of interest*. This letter serves as the cover letter for the Pre-application Worksheet, expressing interest in submitting an application. It describes the overall clean fuel technology program of the agency, including the technology selected, describes the necessary infrastructure to support the program and the long-range objectives of the program including the eventual size of the clean fuel fleet. It summarizes the eligible activities for which the agency is applying and the amount of funds that the agency is seeking.

(2) *Pre-application worksheet*. Applicants must use the worksheet found in Appendix A to this part.

§ 624.7 Certification.

The applicant must use the certification contained in the Annual Notice of Assurances and Certifications published in the FEDERAL REGISTER each October.

§ 624.9 Formula.

The Clean Fuels Formula funds will be apportioned according to the following formula:

(a) *Areas with population 1,000,000 and above*. Two thirds of the funds available each fiscal year shall be apportioned to applicants with eligible projects in urban areas with a population of 1,000,000 and above. Of this, 50 percent shall be apportioned so that each applicant receives a grant in an amount equal to the ratio between:

(1) The number of vehicles in the bus fleet of the eligible applicant, weighted by the severity of nonattainment for the area in which the eligible applicant is located; and

(2) The total number of vehicles in the bus fleets of all eligible applicants in areas with a population of 1,000,000 and above, weighted by the severity of nonattainment for all areas in which those eligible projects are located as provided in paragraphs (c) and (d) of this section. The remaining 50 percent shall be apportioned such that each designated recipient receives a grant in an amount equal to the ratio between:

(i) The number of bus passenger miles of the eligible designated recipient, weighted by the severity of nonattainment of the area in which the eligible applicant is located as provided in paragraphs (c) and (d) of this section.

(ii) The total number of bus passenger miles of all eligible applicants in areas with a population of 1,000,000 and above, weighted by the severity of nonattainment of all areas in which those eligible applicants are located as

provided in paragraphs (c) and (d) of this section.

(b) *Areas under 1,000,000 population.* The formula for areas under 1,000,000 in population is the same as paragraph (a) of this section, except the formula removes the pool of eligible applicants in areas with a population of 1,000,000 and above and replaces it with the pool of eligible applicants in areas with populations under 1,000,000.

(c) *Weighting factors.* (1) The weighting factor for ozone shall be determined based on the following factors.

(i) 1.0 if, at the time of the apportionment, the area is a maintenance area for ozone;

(ii) 1.1 if, at the time of the apportionment, the area is classified as a marginal ozone nonattainment area;

(iii) 1.2 if, at the time of the apportionment, the area is classified as a moderate ozone nonattainment area;

(iv) 1.3 if, at the time of the apportionment, the area is classified as a serious ozone nonattainment area;

(v) 1.4 if, at the time of the apportionment, the area is classified as a severe ozone nonattainment area;

(vi) 1.5 if, at the time of the apportionment, the area is classified as an extreme ozone nonattainment area;

(2) The weighting factor for CO shall be determined based on the factors:

(i) 1.0 if, at the time of the apportionment, the area is a maintenance area for carbon monoxide;

(ii) 1.2 if, at the time of the apportionment, the area is classified as a moderate carbon monoxide nonattainment area;

(iii) 1.3 if, at the time of the apportionment, the area is classified as a serious carbon monoxide nonattainment area.

(3) The number of buses in the fleet and the bus passenger miles shall be multiplied by the higher of the ozone or CO factors.

(d) *Additional adjustment.* The number of buses in the fleet and the bus passenger miles shall be further multiplied by a factor of 1.2 if the area is both nonattainment for CO and either nonattainment or maintenance for ozone.

(e) *Limitation on uses.* (1) Not less than 5 percent of the amount made available by or appropriated under 49 U.S.C. 5338 in each fiscal year to carry out this section shall be available for any eligible projects for which an application is received from a designated recipient for the purchase or construction of hybrid electric or battery-powered buses or facilities specifically designed to service those buses.

(2) Not more than 35 percent of the amount made available by or appropriated under 49 U.S.C. 5338 in each fiscal year to carry out this section may be made available to fund clean diesel buses.

(3) Not more than 5 percent of the amount made available by or appropriated under 49 U.S.C. 5338 in each fiscal year to carry out this section may be made available to fund 21 retrofitting or replacement of the engines of buses that do not meet the clean air standards of the Environmental Protection Agency, as in effect on the date on which the application for such retrofitting or replacement is submitted under § 624.5.

NOTE TO § 624.9. Maximum grant amount. The amount of a grant made to a designated recipient under this section shall not exceed the lesser of—for an eligible project in an area with a population of less than 1,000,000, $15,000,000,—and for an eligible project in an area with a population of at least 1,000,000, $25,000,000; or 80 percent of the total cost of the eligible project. Any amounts that would otherwise be apportioned to a designated reciipient under this Note that exceed the amount described in this Note shall be reapportioned among other designated recipients in accordance with this section.

[67 FR 41579, June 18, 2002]

§ 624.11 Reporting.

(a) Recipients of financial assistance under 49 U.S.C. 5308 who purchase or lease hybrid electric, battery electric and fuel cell vehicles must report to the appropriate FTA regional office on a quarterly basis for the first three years of the useful life of the vehicle with the following information:

(1) Vehicle miles traveled;

(2) Fuel/energy costs;

(3) Vehicle fuel/energy consumption and oil consumption;

(4) Number of road calls or breakdowns resulting from clean fuel and advanced propulsion technology systems, and

(5) Maintenance costs associated with the clean fuels or advanced propulsion system.

(b) Recipients of financial assistance under 49 U.S.C. 5308 who purchase or lease compressed natural gas (CNG), liquefied natural gas (LNG), and liquefied petroleum gas (LPG) vehicles may report the information described in paragraph (a) of this section, but this reporting is voluntary.

(c) Recipients of financial assistance under 49 U.S.C. 5308 who purchase or lease clean diesel vehicles should not report information beyond the normal FTA quarterly reporting requirements.

APPENDIX A TO PART 624—PRE–APPLICATION WORKSHEET

The following are instructions for completing the pre-application worksheet:

(1) *Requesting Agency*. Fill in the name of the applicant. The applicant must be a designated recipient.

(2) *UZA (or Urban Area)*. List the name of the urbanized area if the applicant is located in an urbanized area. Otherwise, indicate the name of the city or town.

(3) *Nonattainment or Maintenance Area Name*. List the name of the nonattainment or maintenance area in which your agency provides service.

(4) *Classification for Ozone*. List the current EPA nonattainment classification for your service area. (The classification must be of the following terms: marginal, moderate, serious, severe, or extreme.)

(5) *Classification for Carbon Monoxide*. List the current EPA nonattainment classification for your service area. (The classification must be either moderate or serious.)

I. Proposed activity.

(1) *New Bus Purchase/Lease*. Enter the number of vans or buses by fuel category in the pre-application. For hybrid electric vehicles, include fuel types. Indicate whether the structure is lightweight composite or traditional structure and weight. Enter the total and Federal amount for each fuel type.

(2) *Construct/Lease New Clean Fuel Facility and Related Equipment*. Indicate the Federal and total amount for a clean fuels facility, related equipment or electrical recharging facility. Enter any descriptive or explanatory information on the lines for additional information, including what fuel type is being accommodated. Facilities to accommodate clean diesel are not eligible.

(3) Indicate the Federal amount and total amount for improvements to existing facilities to accommodate clean fuel buses. Enter any descriptive or explanatory information on the line for additional items, including what fuel type is being accommodated.

(4) Indicate the Federal amount and total amount for repowering/replacing pre-1993 engines with engines that meet current emissions standards when installed. Please include a separate entry for each fuel type. For the purposes of this program, repowering/replacement means the removal of an engine from the bus followed by the installation of another engine. This applies to engines that are replaced with new, previously unused engines, as well as those exchanged from an inventory of rebuilt engines.

(5) Enter a quantity, Federal amount, and total amount by fuel type for retrofit/rebuild of pre-1993 engines to comply with latest EPA-certified emissions standards. For the purposes of this program, ''retrofit'' means the use of the latest after-market technology such as ''upgrade kits,'' or after-treatment device(s) that treat the exhaust after it has left the engine, such as catalytic converters or particulate filters. ''Before the half-life rebuild'' means that the retrofitting would need to occur before the bus is six years old. Since this provision applies to pre-1993 engines, this provision is of limited time availability.

(6) This section should describe any proposed clean fuel project not included in the categories above. Since any project not included above requires approval at the discretion of FTA, projects included here should also be described in the letter of interest. Include the Federal amount and total.

(7) *Summary*. Indicate the Totals for the Federal and Total Amounts requested for all projects listed in this Section I.

II. Data

This section contains the active bus fleet and annual bus passenger miles information that is required to run the Clean Fuels formula.

(1) Enter the number of buses in the active fixed route fleet. For this purpose, ''bus'' includes articulated motorbus, Class A bus (>35 seats), Class B bus (25–35 seats), Class C bus (<25 seats), double-decked bus, school bus, and electric trolley bus. Use NTD data that was reported 2 years prior (*e.g.*, if applying in FY 2003, use data from FY 2001). For UZAs that have already submitted information to the National Transit Database (NTD), add the data from column H of Form 408 for the following vehicle types: AB, BA, BB, BC, DD, SB, and TB. (These vehicle types are defined in reporter's guidance for the NTD.)

(2) Enter the fixed route annual bus passenger miles for 2 years prior (*e.g.*, if applying in FY 2003, use data from FY 2001. This may include motorbus (see types above) or trolley bus. For UZAs that have submitted NTD data, add the information from column I of line 25 of Form 406 for the modes MB and TB.

III. Projects Subject to Minimum/Maximum Apportionments

This section provides a dollar total for the areas that are affected by either maximum or minimum constraints. These constraints apply to the entire program and not to individual applicants. However, in order to comply with these constraints, FTA must know how much each applicant is applying for in each of these areas.

(1) Enter the total Federal dollar amount for the purchase/lease of clean diesel vehicles.

(2) Enter the total Federal dollar amount for project elements that fall into the category of purchasing hybrid electric or battery-powered buses or constructing facilities designed to service them.

(3) Enter the total Federal dollar amount for project elements that fall into the category of retrofitting or replacing bus engines that do not meet the clean air standards of the EPA.

NOTE: Because of the uncertainty of how many grantees will apply, the actual amount that a grantee receives in an apportionment may be different from the amount requested in the application that was submitted. Furthermore, because clean diesel and retrofit/replacement of bus engines are subject to maximum constraints, the amounts specifically apportioned for those purposes may not resemble the proportionality of the application. For example, suppose Grantee A's application included $500,000 for clean diesel and $100,000 for a compressed natural gas bus. If the 35 percent ceiling for clean diesel is exceeded by the total applications, Grantee A may only be allowed $50,000 to be used specifically for clean diesel because of the ceiling. The remainder of the funds apportioned to Grantee A (say, $300,000) would have to be used in areas without a maximum constraint, *i.e.*, in areas other than clean diesel or retrofit/replacement of bus engines if applied for.

IV. Certification

The chief executive officer or the general manager of the transit agency should sign this certification.

Appendix A to Part 624 - CLEAN FUELS FORMULA PROGRAM
Pre-Application Worksheet

Agency Name _____ Non-Attainment or Maintenance Area Name _____

UZA (or Urban Area) _____ Classification For Ozone _____

Classification For Carbon Monoxide _____

I. PROPOSED ACTIVITY

1) New Bus Purchase/Lease

Fuel Type	Quantity	Composite or Traditional	Federal Amount	Total Amount
CNG			$	$
LNG			$	$
Biodiesel			$	$
Batteries			$	$
Alcohol-based			$	$
Hybrid elec.			$	$
Fuel cell			$	$
Clean diesel			$	$
Other (Specify) _____			$	$

2) Construct/Lease New Clean Fuel Facility & Related Equipment
(Indicate The Federal and Total Amounts For Each Category)

	Federal Amount	Total Amount
Electrical Recharging Facility	$	$
Clean Fuels Facility (Specify fuel type _____)	$	$
Related Equipment	$	$

Description _____

_____

3) Improvements To Existing Facilities To Accommodate Clean Fuel Buses

	Federal Amount	Total Amount
Facility Improvements (Specify fuel type _____)	$	$

Description _____

_____

4) Re-power/Replace Pre-1993 Engines With Engines That Meet Emissions Standards When Installed In The Respective Vehicle. (Separate Entry For Each Fuel Type)

Fuel Type	Quantity	Federal Amount	Total Amount
CNG		$	$
LNG		$	$
Biodiesel		$	$
Batteries		$	$
Alcohol-based		$	$
Hybrid elec.		$	$
Fuel cell		$	$
Clean diesel		$	$
Other (Specify) _____		$	$

5) Retrofit/Rebuild Pre-1993 Engines To Comply With Latest Emissions Standards

Fuel Type	Quantity	Federal Amount	Total Amount
CNG		$	$
LNG		$	$
Biodiesel		$	$
Batteries		$	$
Alcohol-based		$	$
Hybrid elec.		$	$
Fuel cell		$	$
Clean diesel		$	$
Other (Specify) _____		$	$

6) Other

Description _____

_____

Federal Amount $ _____ Total Amount $ _____

7) Summary

Total Requested For All Projects $ _____

Federal Requested For All Projects $ _____

II. DATA

1) Total Active Year 20___ Bus Fleet (number of buses) _____
(Motor Bus & Trolley Bus)

2) Year 20___ Bus Passenger Miles _____
(Motor Bus & Trolley Bus)

III. FEDERAL DOLLAR AMOUNT FOR THE PROJECTS LISTED ABOVE SUBJECT TO MINIMUM OR MAXIMUM APPORTIONMENTS

Purchase/Lease Clean Diesel Buses	$
Hybrid Electrical or Battery Powered Buses/Facilities	$
Retrofit or Replace Engines That Meet EPA Clean Air Standards	$

IV. CERTIFICATION

I understand that the Clean Fuels Formula Grant Program funds will be apportioned based on the information in this pre-application worksheet. I certify that to the best of my knowledge the information contained on this pre-application worksheet is true and correct. In addition, I understand that since funds have been apportioned on the basis of the information contained in this worksheet, we are limited in our ability to make any revisions to the final application.

_____
CEO or General Manager

_____
Date

PART 630—UNIFORM SYSTEM OF ACCOUNTS AND RECORDS AND REPORTING SYSTEM

Sec.
630.1 Purpose.
630.2 Scope.
630.3 Definitions.
630.4 Requirements.
630.5 Failure to report data.
630.6 Late and incomplete reports.
630.7 Failure to respond to questions.
630.8 Questionable data items.
630.9 Notice of FTA action.
630.10 Waiver of reporting requirements.
630.11 Data adjustments.
630.12 Display of OMB control numbers.

APPENDIX TO PART 630—OVERVIEW AND EXPLANATION OF THE URBAN MASS TRANSPORTATION INDUSTRY UNIFORM SYSTEM OF ACCOUNTS AND RECORDS AND REPORTING SYSTEM

AUTHORITY: Sec. 111, Pub. L. 93–503, 88 Stat. 1573 (49 U.S.C. 1611); Secs. 303(a) and 304(c), Public Law 97–424, 96 Stat. 2141 (49 U.S.C. 1607); and 49 CFR 1.51.

SOURCE: 58 FR 4888, Jan. 15, 1993, unless otherwise noted.

§630.1 Purpose.

The purpose of this part is to prescribe requirements and procedures necessary for compliance with the Uniform System of Accounts and Records and Reporting System mandated by section 15 of the Federal Transit Act, as amended, 49 U.S.C. 1611, and to set forth the procedures for addressing a reporting agency's failure to comply with these requirements.

§630.2 Scope.

This part applies to all applicants and beneficiaries of Federal financial assistance under section 9 of the Federal Transit Act, as amended (49 U.S.C. 1607a).

§630.3 Definitions.

(a) Except as otherwise provided, terms defined in the Federal Transit

Act, as amended (49 U.S.C. 1601 *et seq.*), are used in this part as so defined.

(b) Terms defined in the current editions of the Urban Mass Transportation Industry Uniform System of Accounts and Records and the annual Reporting Manual, are used in this part as so defined.

(c) For purposes of this part:

Administrator means the Federal Transit Administrator or the Administrator's designee.

Applicant means an applicant for assistance under section 9 of the Federal Transit Act, as amended.

Assistance means Federal financial assistance for the acquisition, construction, or operation of public mass transportation services.

Beneficiary means any organization operating and delivering urban transit services that directly receives benefits from assistance under section 9 of the Federal Transit Act, as amended.

Chief Executive Officer (CEO) means the principal executive in charge of and responsible for the reporting agency.

Current edition of the Urban Mass Transportation Industry Uniform System of Accounts and Records and the Reporting Manual means the most recently issued edition of the reference documents.

Days mean calendar days.

The Federal Transit Act means the Federal Transit Act, as amended (49 U.S.C. 1601a et seq.)

Mass Transportation Agency or transit agency means an agency authorized to transport people by bus, rail, or other conveyance, either publicly or privately owned, and which provides to the public general or special service (but not including school, charter, or sightseeing service) on a regular and continuing, scheduled or unscheduled, basis. Transit agencies are classified according to the mode of transit service operated. A multi-mode transit agency operates two or more modes, which are defined in the current editions of the Urban Mass Transportation Industry Uniform System of Accounts and Records and the Reporting Manual.

Reference Document(s) means the current editions of the Urban Mass Transportation Industry Uniform System of Accounts and Records, and the Reporting Manual. These documents are subject to periodic revision. Beneficiaries and applicants are responsible for using the current editions of the reference documents.

Reporting agency means the agency required to submit a report under section 15.

§ 630.4 Requirements.

(a) *Uniform system of accounts and records.* Each applicant for and direct beneficiary of Federal financial assistance under section 9 of the Federal Transit Act must comply with the applicable requirements of the section 15 Uniform System of Accounts and Records, as set forth in the current edition of the ''Urban Mass Transportation Industry Uniform System of Accounts and Records''; the ''Reporting Manual''; Circulars; and other reference documentation.

(b) *Reporting system.* Each applicant for, and direct beneficiary of, Federal financial assistance under section 9 of the Federal Transit Act must comply with the applicable requirements of the section 15 Reporting System, as set forth in the current edition of the ''Urban Mass Transportation Industry Uniform System of Accounts and Records''; the ''Reporting Manual''; Circulars; and other reference documentation.

(c) *Copies.* Copies of these referenced documents are available from the Federal Transit Administration, Office of Grants Management, Audit Review and Analysis Division, P.O. Box 61126, Washington, DC 20039–1126. These reference documents are subject to periodic revision. Revisions of these documents will be mailed to all persons required to comply and a notice of any significant changes in these reference documents will be published in FEDERAL REGISTER.

§ 630.5 Failure to report data.

Failure to report data in accordance with this part will result in the reporting agency being ineligible to receive any section 9 grants directly or indirectly (e.g., a public agency receiving The FTA funds through another public agency rather than directly from the FTA). This ineligibility applies to all

reporting agencies without regard to the size of the urbanized area served by the reporting agency.

§ 630.6 Late and incomplete reports.

(a) *Late reports.* Each reporting agency shall ensure that its report is received by the FTA on due dates prescribed in the annual Reporting Manual. A reporting agency may request an extension of 30 days after the due date. The FTA will treat a failure to submit the required report by the due date as failure to report data under § 630.05.

(b) *Incomplete reports.* The FTA will treat any report or submission which does not contain all the necessary reporting forms, data, or certifications for services directly operated by the reporting agency in substantial conformance with the definitions, procedures, and format requirements set out in the section 15 Uniform System of Accounts and Records and Reporting System as failure to report data under § 630.05. The FTA will treat the submission of a report with incomplete data or missing forms for services provided under contract to the reporting agency by private or public carriers as failure to report data under § 630.05 provided that the reporting agency has exhausted all possibilities for obtaining this information.

§ 630.7 Failure to respond to questions.

The FTA will review each section 15 report to verify the reasonableness of the data submitted. If any of the data do not appear reasonable, the FTA will notify the reporting agency of this fact and request written justification to document the accuracy of the questioned data. Failure of a reporting agency to make a good faith written response to this request will be treated under § 630.5 as failure to report data.

§ 630.8 Questionable data items.

The FTA may enter a zero or adjust any questionable data item(s) in a reporting agency's section 15 report used in computing the section 9 apportionment. These adjustments may be made if any data appear inaccurate or have not been collected and reported in accordance with the FTA's definitions and/or confidence and precision levels, or if there is lack of adequate documentation or a reliable recordkeeping system.

§ 630.9 Notice of FTA action.

Before taking final action under § 630.5, § 630.6, § 630.7 or § 630.8, the FTA will transmit a written request to the reporting agencies to provide the necessary information within a specified reasonable period of time. The FTA will advise the reporting agency of its final decision in this regard.

§ 630.10 Waiver of reporting requirements.

Waivers of one or more sections of the reporting requirements may be granted at the discretion of the Administrator on a written showing that the party seeking the waiver cannot furnish the required data without unreasonable expense and inconvenience. Each waiver will be for a specified period of time.

§ 630.11 Data adjustments.

Errors in the data used in making the apportionment may be discovered after any particular year's apportionment is completed. If so, the FTA shall make adjustments to correct these errors in a subsequent year's apportionment to the extent feasible.

§ 630.12 Display of OMB control numbers.

All of the information collection requests in this part have been approved by the Office of Management and Budget under control number 2132–0008.

APPENDIX A TO PART 630—OVERVIEW AND EXPLANATION OF THE URBAN MASS TRANSPORTATION INDUSTRY UNIFORM SYSTEM OF ACCOUNTS AND RECORDS AND REPORTING SYSTEM

A. Introduction

Section 15 of the Federal Transit Act, as amended, provides for establishment of two information-gathering analytic systems: A Uniform System of Accounts and Records, and a Reporting System for the collection and dissemination of public mass transportation financial and operating data by uniform categories. The purpose of these two Systems is to provide information on which to base public transportation planning and public sector investment decisions. The section 15 system is administered by the Federal Transit Administration (FTA).

The Uniform System of Accounts and Records consists of:

• Various categories of accounts and records for classifying financial and operating data;

• Precise definitions as to what data elements are to be included in these categories; and

• Definitions of practices for systematic colloection and recording of such information.

• While a specific accounting system is recommended for this recordkeeping, it is possible to make a translation from most existing accounting systems to comply with the *Section 15 Reporting System,* which consists of forms and procedures:

• For transmitting data from transit agencies to the FTA;

• For editing and storing the data; and

• For the FTA to report information to various groups.

Under the terms of section 15 of the Federal Transit Act, as amended, all applicants for, and beneficiaries of, Federal assistance under section 9 of the Act (under the formula grant programs) must comply with the Reporting System and the Uniform System of Accounts and Records in order to be eligible for Federal grants. It should be noted that separate and complete Section 15 reports must be submitted by or for each purchased transportation service provider that operates 100 or more revenue vehicles for the purchased service during the maximum service period.

B. Purpose of This Appendix

This appendix presents a general introduction to the structure and operation of the two Systems. It is not a detailed set of instructions for completion of a Section 15 report or establishment of a System of Accounts and Records. Persons in need of more information should refer to the current editions of the Urban Mass Transportation Industry Uniform System of Accounts and Records and the Reporting Manual, available from: Federal Transit Administration, Audit Review and Analysis Division, Office of Capital and Formula Assistance, P.O. Box 61126, Washington, DC 20039–1126.

The FTA periodically updates these reference documents or supplements them to revise or clarify section 15 definitions, reporting forms and instructions. Section 630.4 makes clear that reporting agencies must use the most recent edition of reference documents and reporting forms to comply with the section 15 requirements. The FTA therefore encourages local officials to check with the FTA before completing a Section 15 report to avoid unnecessary efforts and delays.

C. Special (Reduced) Reporting Requirements

Certain information collection and recording requirements were tailored to accommodate the unique characteristics of certain transportation modes. Reduced requirements were permitted during limited time periods to ease transition to complete reporting for these modes. Reduced reporting requirements for commuter rail systems and vanpool services ended in the 1987 report year. In addition, the reduced reporting requirements for private subscription and private noncontract conventional bus service is eliminated for the 1992 report year.

D. A Single Required Level of Section 15 Reporting and Recordkeeping

The FTA has developed a single required reporting format for use by all transit agencies. The single required level accommodates variations in size, local laws, and modes of transport.

The Uniform Systems also contain a limited amount of additional more detailed financial and operational data that can be submitted at the reporting agency's option. Because the optional subcategories of data can be aggregated to the required level, these subcategories define the more aggregated data. The definitions for data reported at the required level are consistent with, and summarized from, those for the more detailed optional data.

E. The Uniform System of Accounts and Records

The Uniform System of Accounts and Records (USOA) consists of a financial accounting and operational recordkeeping system designed for mass transportation managers and planners. Its uniformity permits more thorough and accurate comparisons and analyses of different transit agencies' operating costs and efficiencies than if each had a unique recordkeeping and accounting system. The System establishes various categories of accounts and records for classifying mass transportation operating and financial data, and includes precise definitions of transportation terminology to ensure that all users share a common understanding of how to use and interpret the collected data.

(1) Use of the Accounts and Records System

Beneficiaries of, and applicants for, Federal assistance are not required to use the Uniform System of Accounts and Records in keeping their own records. If an applicant or beneficiary chooses not to use the System, however, it must nevertheless be able to translate its accounts and records system to the accounts prescribed in the System. The accounting system that the reporting agency uses must permit preparation of financial and operating data that conform to the Uniform System directly from its records at the

end of the fiscal year, and must be consistent with the following:

(i) The data must have been developed using the accrual method of accounting. Those transit systems that use cash-basis accounting, in whole or in part, must make work sheet adjustments in their account books to record the data on the accrual basis.

(ii) Reporting agencies must follow or be able to directly translate their system to the accounting treatment specified in the publication ''Uniform System of Accounts and Records.''

(iii) The reporting agency's accounting categories (chart of accounts) must be correctly related, using a clear audit trail, to the accounting categories prescribed in the Uniform System of Accounts and Records.

(2) General Structure of Uniform System of Accounts and Records

In the Section 15 Uniform System of Accounts and Records, operating expenses incurred by the transit system are classified by transit mode. The FTA developed expense classifications in two dimensions for uniformity and to enhance the usefulness of the data collected under section 15. The classifications are typical of those of most transit accounting systems. The two dimensions are:

(i) The type of expenditure (expense object class); and

(ii) The function or activity performed.

Operating expenses can be identified either in function or object class categories, or cross-classified, allowing identification using both categories. The Uniform System also categorizes expenditures by four basic functions submitted by all reporting agencies. A limited number of additional details are optional. All reporting agencies are required to use a single set of object class categories.

The Uniform System has a single set of revenue object classes to be used by all reporting agencies, and provides a limited number of additional details that are optional.

The Uniform System provides a classification for sources and uses of capital to be submitted by all reporting agencies. These classifications replace capital information previously required on the balance sheet and capital subsidiary schedule.

The Uniform System of Accounts and Records also includes collecting and recording of certain operating data elements.

Details and definitions of the expense object classes, functions, revenue object classes, sources and uses of capital, and operating data elements are contained in the current edition of the ''Reporting Manual,'' which is updated annually, and the USOA reference documents.

F. The Reporting System

(1) The Section 15 Reporting System consists of forms and procedures for transmitting data from transit agencies to the FTA. All beneficiaries of Federal financial assistance must submit the required forms and information in order to allow the FTA to: (1) Store and generate information on the Nation's mass transportation systems; and (2) calculate apportionment allocations for the section 9 formula grant program (for urbanized areas of 200,000 or more inhabitants). Agencies submitting Section 15 reports may only submit data for transit services which they directly operate and purchase under contract from public agencies and/or private carriers.

Separate and complete Section 15 reports must be submitted by or for each purchased transportation service provider that operates 100 or more revenue vehicles for the purchased service during the maximum service period. The reporting requirements include the following major segments, which are based on information assembled through the Uniform System of Accounts and Records:

1. Capital report.
2. Revenue report.
3. Expense report.
4. Nonfinancial operating data reports.
5. Miscellaneous auxiliary questionnaires and subsidiary schedules.
6. Data declarations.

(2) The Section 15 Reporting System includes two data declarations.

(a) The Chief Executive Officer (CEO) Certification.

The CEO of each reporting agency is required to submit a certification with each annual Section 15 report. The certification must attest:

- To the accuracy of all data contained in the Section 15 report;
- That all data submitted in the Section 15 report are in accord with Section 15 definitions;
- If applicable, that the reporting agency's accounting system used to derive all data submitted in the Section 15 report is the section 15 Uniform System of Accounts and Records and that a Section 15 report using this system was certified by an independent auditor in a previous report year;
- If applicable, the fact that the reporting agency's internal accounting system is other than the Uniform System of Accounts and Records, and that its: (i) accounting system uses the accrual basis of accounting, (ii) accounting system is directly translated, using a clear audit trail, to the accounting treatment and categories specified by the section 15 Uniform System of Accounts and Records, and (iii) accounting system and direct translation to the Uniform System of Accounts and Records are the same as those certified

by an independent auditor in a previous reporting year; and

• That a 100% count of passenger mile data was conducted or that the sampling method used to collect passenger mile data for each mode/type of service meets the FTA requirements.

(b) Auditor Statement on Section 15 Financial Data Reporting Forms and Section 9 Data.

Reporting agencies must submit with their Section 15 report a statement signed by an independent public accountant or other responsible independent entity such as a state audit agency. This statement must express an opinion on whether the financial data reporting forms in the Section 15 report present fairly, in all material respects, the information required to be set forth therein in accordance with the Uniform System of Accounts and Records. The statement shall also indicate whether any of the reporting forms or data elements do not conform to the section 15 requirements, and describe the discrepancies. The statement must consider both required and optional data entries.

Each agency is required to file an Auditor Statement unless it received a written waiver from the FTA. The criteria in either Condition I or Condition II for granting a financial data waiver are:

Condition I. The reporting agency (1) has adopted the Industry Uniform System of Accounts and Records (USOA) and (2) has previously submitted a Section 15 report that was compiled using the USOA and was reviewed by an independent auditor; or

Condition II. The reporting agency (1) uses an internal accounting system other than the accounting system prescribed by the USOA, (2) uses the accrual basis of accounting, (3) directly translates the system and accounting categories, using a clear audit trail, to the accounting treatment and categories specified by the USOA, and (4) has previously submitted a Section 15 report that was compiled using the same internal accounting system and translation to the USOA and was reviewed by an independent auditor.

For agencies that have received a waiver, the CEO annual Certification must verify that the financial data meet one of the above two conditions.

Additionally, all reporting agencies that are in or serve urbanized areas with populations of 200,000 or more and whose report covers 100 or more vehicles in annual maximum service across all modes and types of service must have an independent auditor review all section 15 data used in the section 9 formula allocation. The statement should discuss, by mode and type of service: directional route miles, vehicle revenue miles, passenger miles, and operating cost, and include both directly operated and purchased service. The independent, certified public accountant shall perform the verification in accordance with the ''Statements on Standards for Attestation Engagements'' issued by the American Institute of Certified Public Accountants. The specific procedures to be reviewed are described in the most recent Section 15 Reporting Manual.

PART 633—PROJECT MANAGEMENT OVERSIGHT

Subpart A—General Provisions

Sec.
633.1 Purpose.
633.3 Scope.
633.5 Definitions.

Subpart B—Project Management Oversight Services

633.11 Covered projects.
633.13 Initiation of PMO services.
633.15 Access to information.
633.17 PMO contractor eligibility.
633.19 Financing the PMO program.

Subpart C—Project Management Plans

633.21 Basic requirement.
633.23 FTA review of PMP.
633.25 Contents of a project management plan.
633.27 Implementation of a project management plan.
633.29 PMP waivers.

AUTHORITY: 49 U.S.C. 1601 et. seq., 1619.

SOURCE: 54 FR 36711, Sept. 1, 1989, unless otherwise noted.

Subpart A—General Provisions

§ 633.1 Purpose.

This part implements section 324 of the Surface Transportation and Uniform Relocation Assistance Act of 1987 (Pub. L. 100–17), which added section 23 to the FT Act. The part provides for a two-part program for major capital projects receiving assistance from the agency. First, subpart B discusses project management oversight, designed primarily to aid FTA in its role of ensuring successful implementation of federally-funded projects. Second, subpart C discusses the project management plan (PMP) required of all major capital projects. The PMP is designed to enhance the recipient's planning and implementation efforts and to assist FTA's grant application analysis efforts.

§ 633.3 Scope.

This rule applies to a recipient of Federal financial assistance undertaking a major capital project using funds made available under:

(a) Sections 3, 9, or 18 of the Federal Mass Transit Act of 1964, as amended;

(b) 23 U.S.C. 103(e)(4); or

(c) Section 14(b) of the National Capital Transportation Amendments of 1979 (93 Stat. 1320, Pub. L. 96–184).

§ 633.5 Definitions.

As used in this part:

Administrator means the Administrator of the Federal Transit Administration or the Administrator's designee.

Days means calendar days.

Fixed guideway means any public transportation facility which utilizes and occupies a separate right-of-way or rails. This includes, but is not limited to, rapid rail, light rail, commuter rail, automated guideway transit, people movers, and exclusive facilities for buses and other high occupancy vehicles.

Full funding agreement means a written agreement between FTA and a recipient that establishes a financial ceiling with respect to the Government's participation in a project; sets forth the scope of a project; and sets forth the mutual understanding, terms, and conditions relating to the construction and management of a project.

Major capital project means a project that:

(1) Involves the construction of a new fixed guideway or extension of an existing fixed guideway;

(2) Involves the rehabilitation or modernization of an existing fixed guideway with a total project cost in excess of $100 million; or

(3) The Administrator determines is a major capital project because the project management oversight program will benefit specifically the agency or the recipient. Typically, this means a project that:

(i) Generally is expected to have a total project cost in excess of $100 million or more to construct;

(ii) Is not exclusively for the routine acquisition, maintenance, or rehabilitation of vehicles or other rolling stock;

(iii) Involves new technology;

(iv) Is of a unique nature for the recipient; or

(v) Involves a recipient whose past experience indicates to the agency the appropriateness of the extension of this program.

Project management oversight means the monitoring of a major capital project's progress to determine whether a project is on time, within budget, in conformance with design criteria, constructed to approved plans and specifications and is efficiently and effectively implemented.

Project management plan means a written document prepared by a recipient that explicitly defines all tasks necessary to implement a major capital project.

Recipient means a direct recipient of Federal financial assistance from FTA.

FT Act means the Federal Mass Transit Act of 1964, as amended.

FTA means the Federal Transit Administration.

Subpart B—Project Management Oversight Services

§ 633.11 Covered projects.

The Administrator may contract for project management oversight services when the following two conditions apply:

(a) The recipient is using funds made available under section 3, 9, or 18 of the Federal Mass Transit Act of 1964, as amended; 23 U.S.C. 103(e)(4); or section 14(b) of the National Capital Transportation Amendments of 1979; and

(b) The project is a ''major capital project''.

§ 633.13 Initiation of PMO services.

PMO services will be initiated as soon as it is practicable, once the agency determines this part applies. In most cases, this means that PMO will begin during the preliminary engineering phase of the project. However, consistent with other provisions in this part, the Administrator may determine that a project is a ''major capital project'' at any point during its implementation. Should this occur, PMO will begin as soon as practicable after this agency determination.

§ 633.15 Access to information.

A recipient of FTA funds for a major capital project shall provide the Administrator and the PMO contractor chosen under this part access to its records and construction sites, as reasonably may be required.

§ 633.17 PMO contractor eligibility.

(a) Any person or entity may provide project management oversight services in connection with a major capital project, with the following exceptions:

(1) An entity may not provide PMO services for its own project; and

(2) An entity may not provide PMO services for a project if there exists a conflict of interest.

(b) In choosing private sector persons or entities to provide project management oversight services, FTA uses the procurement requirements in the government-wide procurement regulations, found at 48 CFR CH I.

§ 633.19 Financing the PMO program.

(a) FTA is authorized to expend up to ½ of 1 percent of the funds made available each fiscal year under sections 3, 9, or 18 of the FT Act, 23 U.S.C. 103(e)(4), or section 14(b) of the National Capital Transportation Amendments of 1979 (93 Stat. 1320) to contract with any person or entity to provide a project management oversight service in connection with a major capital project as defined in this part.

(b) A contract entered into between FTA and a person or entity for project management oversight services under this part will provide for the payment by FTA of 100 percent of the cost of carrying out the contract.

Subpart C—Project Management Plans

§ 633.21 Basic requirement.

(a) If a project meets the definition of major capital project, the recipient shall submit a project management plan prepared in accordance with § 633.25 of this part, as a condition of Federal financial assistance. As a general rule, the PMP must be submitted during the grant review process and is part of FTA's grant application review. This section applies if:

(1) The project fails under one of the automatic major capital investment project categories (§ 633.5(1) or (2) of this part); or

(2) FTA makes a determination that a project is a major capital project, consistent with the definition of major capital project in § 633.5. This determination normally will be made during the grant review process. However, FTA may make such determination after grant approval.

(b)(1) FTA will notify the recipient when it must submit the PMP. Normally, FTA will notify the recipient sometime during the grant review process. If FTA determines the project is major under its discretionary authority after the grant has been approved, FTA will inform the recipient of its determination as soon as possible.

(2) Once FTA has notified the recipient that it must submit a plan, the recipient will have a minimum of 90 days to submit the plan.

§ 633.23 FTA review of PMP.

Within 60 days of receipt of a project management plan, the Administrator will notify the recipient that:

(a) The plan is approved;

(b) The plan is disapproved, including the reasons for the disapproval;

(c) The plan will require modification, as specified, before approval; or

(d) The Administrator has not yet completed review of the plan, and state when it will be reviewed.

§ 633.25 Contents of a project management plan.

At a minimum, a recipient's project management plan shall include—

(a) A description of adequate recipient staff organization, complete with well-defined reporting relationships, statements of functional responsibilities, job descriptions, and job qualifications;

(b) A budget covering the project management organization, appropriate consultants, property acquisition, utility relocation, systems demonstration staff, audits, and such miscellaneous costs as the recipient may be prepared to justify;

(c) A construction schedule;

(d) A document control procedure and recordkeeping system;

(e) A change order procedure which includes a documented, systematic approach to the handling of construction change orders;

(f) A description of organizational structures, management skills, and staffing levels required throughout the construction phase;

(g) Quality control and quality assurance programs which define functions, procedures, and responsibilities for construction and for system installation and integration of system components;

(h) Material testing policies and procedures;

(i) Plan for internal reporting requirements including cost and schedule control procedures; and

(j) Criteria and procedures to be used for testing the operational system or its major components;

§ 633.27 Implementation of a project management plan.

(a) Upon approval of a project management plan by the Administrator the recipient shall begin implementing the plan.

(b) If a recipient must modify an approved project management plan, the recipient shall submit the proposed changes to the Administrator along with an explanation of the need for the changes.

(c) A recipient shall submit periodic updates of the project management plan to the Administrator. Such updates shall include, but not be limited to:

(1) Project budget;

(2) Project schedule;

(3) Financing, both capital and operating;

(4) Ridership estimates, including operating plan; and

(5) Where applicable, the status of local efforts to enhance ridership when estimates are contingent, in part, upon the success of such efforts.

(d) A recipient shall submit current data on a major capital project's budget and schedule to the Administrator on a monthly basis.

§ 633.29 PMP waivers.

A waiver will be considered upon initiation by the grantee or by the agency itself. The Administrator may, on a case-by-case basis, waive:

(a) Any of the PMP elements in § 633.25 of this part if the Administrator determines the element is not necessary for a particular plan; or

(b) The requirement of having a new project management plan submitted for a major capital project if a recipient seeks to manage the major capital project under a previously-approved project management plan.

PART 639—CAPITAL LEASES

Subpart A—General

Sec.
639.1 General overview of this part.
639.3 Purpose of this part.
639.5 Scope of this part.
639.7 Definitions.

Subpart B—Requirements

639.11 Lease qualification requirements.
639.13 Eligible types of leases.
639.15 Eligible forms of grant.
639.17 Eligible lease costs.
639.19 Other Federal requirements.

Subpart C—Cost-Effectiveness

639.21 Determination of cost-effectiveness.
639.23 Calculation of purchase or construction cost.
639.25 Calculation of lease cost.
639.27 Minimum criteria.

Subpart D—Lease Management

639.31 Early lease termination or modification.
639.33 Management of leased assets.

AUTHORITY: 49 U.S.C. 5302; 49 CFR 1.51.

SOURCE: 56 FR 51794, Oct. 15, 1991, unless otherwise noted.

Subpart A—General

§ 639.1 General overview of this part.

This part contains the requirements to qualify for capital assistance when leasing facilities or equipment under the Federal transit laws. This part is set out in four subparts, with subpart A containing general information on scope and definitions. Subpart B contains the principal requirements of this

part, including eligibility requirements, the self-certification system used, and identification of the various forms of leases and grants that are eligible under the program. Subpart B also contains a section on other Federal requirements that may apply. Subpart C includes the actual calculations that each recipient should undertake before certifying that a lease is cost-effective. Finally, subpart D contains requirements on early lease termination and project management in general.

[63 FR 68366, Dec. 10, 1998]

§ 639.3 Purpose of this part.

This rule implements section 3003 of the Transportation Equity Act for the 21st Century (Pub. L. 105–178). Section 3003 amended section 5302 of Chapter 53 of Title 49 of the United States Code to allow a recipient to use capital funds to finance the leasing of facilities and equipment on the condition that the leasing arrangements are more cost effective than purchase or construction.

[63 FR 68367, Dec. 10, 1998]

§ 639.5 Scope of this part.

This part applies to all requests for capital assistance under Chapter 53 of Title 49 of the United States Code where the proposed method of obtaining a capital asset is by lease rather than purchase or construction.

[63 FR 68367, Dec. 10, 1998]

§ 639.7 Definitions.

In this part:

Applicant is included in the term ''recipient''.

Capital asset means facilities or equipment with a useful life of at least one year, which are eligible for capital assistance.

Capital assistance means Federal financial assistance for capital projects under section 9 of the FT Act.

Capital lease means any transaction whereby the recipient acquires the right to use a capital asset without obtaining full ownership regardless of the tax status of the transaction.

Equipment means non-expendable personal property.

Facilities means real property, including land, improvements and fixtures.

Interest rate means the most advantageous interest rate actually available to the recipient in the market.

Present value means the value at the time of calculation of a future payment, or series of future payments discounted by the time value of money as represented by an interest rate or similar cost of funds.

Recipient means an entity that receives Federal financial assistance from FTA, including an entity that receives Federal financial assistance from FTA through a State or other public body. In this part, a recipient includes an applicant for Federal financial assistance.

FT Act means the Federal Mass Transit Act of 1964, as amended, 49 U.S.C. 1601 *et seq*.

FTA means the Federal Transit Administration.

Subpart B—Requirements

§ 639.11 Lease qualification requirements.

(a) A lease may qualify for capital assistance if it meets the following criteria:

(1) The capital asset to be acquired by lease is otherwise eligible for capital assistance;

(2) There is or will be no existing Federal interest in the capital asset as of the date the lease will take effect unless as determined pursuant to § 639.13(b); and

(3) Lease of the capital asset is more cost-effective than purchase or construction of the asset, as determined under subpart C of this part.

(b) Once a lease has been qualified for capital assistance, it need not be requalified absent an affirmative act or omission by the recipient that vitiates the cost-effectiveness determination.

§ 639.13 Eligible types of leases.

(a) *General*. Any leasing arrangement, the terms of which provide for the recipient's use of a capital asset, potentially is eligible as a capital project under Chapter 53 of Title 49 of the United States Code, regardless of the classification of the leasing arrangement for tax purposes.

(b) *Special circumstances.* A recipient may request FTA to determine the eligibility of a certain financial arrangement if the recipient believes it might not meet the requirements of this part.

(c) *Lump sum lease.* A recipient that wishes to enter into a lease which requires the draw down of a single lump sum payment at the inception of the lease (or payments in advance of the incurrence of costs) rather than periodic payments during the life of the lease must notify FTA prior to execution of the lease concerning how it will ensure satisfactory continuing control of the asset for the duration of the lease. FTA has the right to disapprove any arrangements where it has not been demonstrated that the recipient will have control over the asset. FTA may require the recipient to submit its cost-effectiveness comparison for review.

(d) *Pre-existing lease.* A lease entered into before grant approval, or before November 14, 1991 may be eligible for capital assistance for costs incurred after approval of such a lease by FTA under this part, if

(1) The lease is otherwise eligible under this part;

(2) The recipient can demonstrate that the lease, when entered into, was more cost effective than purchase or construction; and

(3) The procurement of the asset by lease was in accordance with Federal requirements that applied at the time the procurement tool place.

[56 FR 51794, Oct. 15, 1991, as amended at 63 FR 68367, Dec. 10, 1998]

§ 639.15 Eligible forms of grant.

A recipient may choose to receive capital assistance for a capital lease approved under this part—

(a) In a single grant under which lease payments may be drawn down periodically for the life of the lease; or

(b) In increments that are obligated by FTA periodically (usually in annual section 9 grants). In this case, a recipient—

(1) Must certify to FTA that it has the financial capacity to meet its future obligations under the lease in the event Federal funds are not available for capital assistance in subsequent years; and

(2) May incur costs under its lease before FTA's obligation of future increments of funding for such a lease. These costs are reimbursable in future grants, so long as the terms of the lease do not substantially change.

§ 639.17 Eligible lease costs.

(a) All costs directly attributable to making a capital asset available to the lessee are eligible for capital assistance, including, but not limited to—

(1) Finance charges, including interest;

(2) Ancillary costs such as delivery and installation charges; and

(3) Maintenance costs.

(b) Any asset leased under this part must be eligible for capital assistance under a traditional purchase or construction grant.

[61 FR 25090, May 17, 1996]

§ 639.19 Other Federal requirements.

(a) A recipient of capital assistance for a capital lease is subject to the same statutory and administrative requirements as a recipient who purchases or constructs a capital asset.

(b) A lessor of a capital lease is subject to the same statutory and administrative requirements as a direct seller of the same capital asset would be when the lessor—

(1) Purchases or constructs a capital asset in contemplation of leasing it to a recipient; or

(2) Modifies an existing capital asset in contemplation of leasing it to a recipient.

Subpart C—Cost-Effectiveness

§ 639.21 Determination of cost-effectiveness.

(a) To qualify a lease for capital assistance, a recipient must—

(1) Make a written comparison of the cost of leasing the asset with the cost of purchasing or constructing it; and

(2) Certify to FTA before entering into the lease or before receiving a capital grant for the asset, whichever is later, that obtaining the asset by lease is more cost-effective than purchase or construction of such asset.

(b) For purposes of this part, obtaining the asset by lease is more cost-effective than purchase or construction when the lease cost calculated under § 639.25 of this part is less than the purchase cost calculated under § 639.23 of this part.

(c) If a recipient is unable to perform the prescribed cost-effectiveness comparison as described in this subpart, it may ask FTA to approve an alternate form of cost-effectiveness evaluation.

§ 639.23 Calculation of purchase or construction cost.

(a) For purposes of this subpart, the purchase or construction cost of a capital asset is—

(1) The estimated cost to purchase or construct the asset; plus

(2) Ancillary costs such as delivery and installation; plus

(3) The net present value of the estimated future cost to provide any other service or benefit requested by the applicant in its proposal to obtain the capital asset.

(b) The estimated cost to purchase or construct must be—

(1) Reasonable;

(2) Based on realistic current market conditions; and

(3) Based on the expected useful life of the asset in mass transportation service, as indicated in paragraph (c) of this section.

(c) For purposes of this part, the expected useful life of a revenue vehicle is the useful life which is established by FTA for recipients of Federal assistance under FTA's Circulars for section 9 recipients. For assets other than revenue vehicles, the applicant is responsible for establishing a reasonable expected useful life. If the recipient does not intend to use the capital asset it is proposing to obtain by lease in mass transportation service for its entire expected useful life, when calculating the purchase cost, the recipient must calculate the fair market value of the asset as of the date the lease will terminate pursuant to Guidelines found in section 108(b) of part II Standard Terms and Conditions for valuation of property withdrawn from transit use before the end of its useful life and subtract that amount from the purchase price. The resulting amount is the purchase price for purposes of this rule.

§ 639.25 Calculation of lease cost.

(a) For purposes of this part, the lease cost of a capital asset is—

(1) The cost to lease the asset for the same use and same time period specified in the recipient's proposal to obtain the asset by purchase or construction; plus

(2) Ancillary costs such as delivery and installation; plus

(3) The net present value of the estimated future cost to provide any other service or benefit requested by the applicant in its proposal to obtain the capital asset.

(b) The estimated lease costs must be reasonable, based on realistic market conditions applicable to the recipient and must be expressed in present value terms.

§ 639.27 Minimum criteria.

In making the comparison between leasing and purchasing or constructing an asset, recipients should ascribe a realistic dollar value to any non-financial factors that are considered by using performance-based specifications in the comparison. In addition to factors unique to each recipient, the following factors are to be used where possible and appropriate:

(a) Operation costs;

(b) Reliability of service;

(c) Maintenance costs;

(d) Difference in warranties;

(e) Passenger comfort;

(f) Insurance costs;

(g) Costs/savings related to timing of acquisition of asset.

(h) Value of asset at expiration of the lease.

Subpart D—Lease Management

§ 639.31 Early lease termination or modification.

(a) Except as provided in paragraph (c) of this section, if a capital lease under this part is terminated or its terms substantially modified before the end of the period used in the cost-effectiveness evaluation, or if the recipient by an affirmative act or omission vitiates the cost-effectiveness determination of the lease, future lease

costs will no longer qualify as eligible capital expenses. In addition, the recipient must reimburse the project—

(1) Any Federal funds paid for the portion of the lease term eliminated by early termination; and

(2) The Federal share of the excess, if any, of the present value of lease costs, which exceeds the purchase costs as calculated under subpart C of this part for the period of the lease up to the point of termination.

(b) Penalties resulting from early termination of a capital lease under this part are not eligible for Federal financial assistance.

(c) Paragraph (a) of this section does not apply if a lessor defaults on or otherwise does not meet its obligations under the capital lease and the recipient takes appropriate action to ensure that the procurement continues to be cost-effective. FTA shall be notified of any such event.

§ 639.33 Management of leased assets.

Each recipient must maintain an inventory of capital assets acquired by standard FTA project management guidelines.

PART 640—CREDIT ASSISTANCE FOR SURFACE TRANSPORTATION PROJECTS

AUTHORITY: Secs. 1501 *et seq.*, Pub. L. 105–178, 112 Stat. 107, 241, as amended; 23 U.S.C. 181–189 and 315; 49 CFR 1.51.

§ 640.1 Cross-reference to credit assistance.

The regulations in 49 CFR part 80 shall be followed in complying with the requirements of this part. Title 49, CFR, part 80 implements the Transportation Infrastructure Finance and Innovation Act of 1998, secs. 1501 *et seq.*, Pub. L. 105–178, 112 Stat. 107, 241.

[64 FR 29753, June 2, 1999]

PART 655—PREVENTION OF ALCOHOL MISUSE AND PROHIBITED DRUG USE IN TRANSIT OPERATIONS

Subpart A—General

Sec.
655.1 Purpose.
655.2 Overview.
655.3 Applicability.
655.4 Definitions.
655.5 Stand-down waivers for drug testing.
655.6 Preemption of state and local laws.
655.7 Starting date for testing programs.

Subpart B—Program Requirements

655.11 Requirement to establish an anti-drug use and alcohol misuse program.
655.12 Required elements of an anti-drug use and alcohol misuse program.
655.13 [Reserved]
655.14 Education and training programs.
655.15 Policy statement contents.
655.16 Requirement to disseminate policy.
655.17 Notice requirement.
655.18–655.20 [Reserved]

Subpart C—Prohibited Drug Use

655.21 Drug testing.
655.22–655.30 [Reserved]

Subpart D—Prohibited Alcohol Use

655.31 Alcohol testing.
655.32 On duty use.
655.33 Pre-duty use.
655.34 Use following an accident.
655.35 Other alcohol-related conduct.
655.36–655.40 [Reserved]

Subpart E—Types of Testing

655.41 Pre-employment drug testing.
655.42 Pre-employment alcohol testing.
655.43 Reasonable suspicion testing.
655.44 Post-accident testing.
655.45 Random testing.
655.46 Return to duty following refusal to submit to a test, verified positive drug test result and/or breath alcohol test result of 0.04 or greater.
655.47 Follow-up testing after returning to duty.
655.48 Retesting of covered employees with an alcohol concentration of 0.02 or greater but less than 0.04.
655.49 Refusal to submit to a drug or alcohol test.
655.50 [Reserved]

Subpart F—Drug and Alcohol Testing Procedures

655.51 Compliance with testing procedures requirements.
655.52 Substance abuse professional (SAP).
655.53 Supervisor acting as collection site personnel.
655.54–655.60 [Reserved]

Subpart G—Consequences

655.61 Action when an employee has a verified positive drug test result or has a confirmed alcohol test result of 0.04 or greater, or refuses to submit to a test.
655.62 Referral, evaluation, and treatment.
655.63–655.70 [Reserved]

Subpart H—Administrative Requirements

655.71 Retention of records.
655.72 Reporting of results in a management information system.
655.73 Access to facilities and records.
655.74–655.80 [Reserved]

Subpart I—Certifying Compliance

655.81 Grantee oversight responsibility.
655.82 Compliance as a condition of financial assistance.
655.83 Requirement to certify compliance.
APPENDIX A TO PART 655—DRUG TESTING MANAGEMENT INFORMATION SYSTEM (MIS) DATA COLLECTION FORM
APPENDIX B TO PART 655—DRUG TESTING MANAGEMENT INFORMATION SYSTEM (MIS) ''EZ'' DATA COLLECTION FORM
APPENDIX C TO PART 655—ALCOHOL TESTING MANAGEMENT INFORMATION SYSTEM (MIS) DATA COLLECTION FORM
APPENDIX D TO PART 655—ALCOHOL TESTING MANAGEMENT INFORMATION SYSTEM (MIS) ''EZ'' DATA COLLECTION FORM

AUTHORITY: 49 U.S.C. 5331; 49 CFR 1.51.

SOURCE: 66 FR 42002, Aug. 9, 2001, unless otherwise noted.

Subpart A—General

§ 655.1 Purpose.

The purpose of this part is to establish programs to be implemented by employers that receive financial assistance from the Federal Transit Administration (FTA) and by contractors of those employers, that are designed to help prevent accidents, injuries, and fatalities resulting from the misuse of alcohol and use of prohibited drugs by employees who perform safety-sensitive functions.

§ 655.2 Overview.

(a) This part includes nine subparts. Subpart A of this part covers the general requirements of FTA's drug and alcohol testing programs. Subpart B of this part specifies the basic requirements of each employer's alcohol misuse and prohibited drug use program, including the elements required to be in each employer's testing program. Subpart C of this part describes prohibited drug use. Subpart D of this part describes prohibited alcohol use. Subpart E of this part describes the types of alcohol and drug tests to be conducted. Subpart F of this part addresses the testing procedural requirements mandated by the Omnibus Transportation Employee Testing Act of 1991, and as required in 49 CFR Part 40. Subpart G of this part lists the consequences for covered employees who engage in alcohol misuse or prohibited drug use. Subpart H of this part contains administrative matters, such as reports and recordkeeping requirements. Subpart I of this part specifies how a recipient certifies compliance with the rule.

(b) This part must be read in conjunction with 49 CFR Part 40, Procedures for Transportation Workplace Drug and Alcohol Testing Programs.

§ 655.3 Applicability.

(a) Except as specifically excluded in paragraph (b) of this section, this part applies to:

(1) Each recipient and subrecipient receiving Federal assistance under:

(i) 49 U.S.C. 5307, 5309, or 5311; or

(ii) 23 U.S.C. 103(e)(4); and

(2) Any contractor of a recipient or subrecipient of Federal assistance under:

(i) 49 U.S.C. 5307, 5309, or 5311; or

(ii) 23 U.S.C. 103(e)(4).

(b) A recipient operating a railroad regulated by the Federal Railroad Administration (FRA) shall follow 49 CFR Part 219 and § 655.83 for its railroad operations, and shall follow this part for its non-railroad operations, if any.

§ 655.4 Definitions.

For this part, the terms listed in this section have the following definitions. The definitions of additional terms

used in this part but not listed in this section can be found in 49 CFR Part 40.

Accident means an occurrence associated with the operation of a vehicle, if as a result:

(1) An individual dies; or

(2) An individual suffers bodily injury and immediately receives medical treatment away from the scene of the accident; or

(3) With respect to an occurrence in which the mass transit vehicle involved is a bus, electric bus, van, or automobile, one or more vehicles (including non-FTA funded vehicles) incurs disabling damage as the result of the occurrence and such vehicle or vehicles are transported away from the scene by a tow truck or other vehicle; or

(4) With respect to an occurrence in which the mass transit vehicle involved is a rail car, trolley car, trolley bus, or vessel, the mass transit vehicle is removed from operation.

Administrator means the Administrator of the Federal Transit Administration or the Administrator's designee.

Anti-drug program means a program to detect and deter the use of prohibited drugs as required by this part.

Certification means a recipient's written statement, authorized by the organization's governing board or other authorizing official that the recipient has complied with the provisions of this part. (See § 655.82 and § 655.83 for certification requirements.)

Contractor means a person or organization that provides a safety-sensitive service for a recipient, subrecipient, employer, or operator consistent with a specific understanding or arrangement. The understanding can be a written contract or an informal arrangement that reflects an ongoing relationship between the parties.

Covered employee means a person, including an applicant or transferee, who performs or will perform a safety-sensitive function for an entity subject to this part. A volunteer is a covered employee if:

(1) The volunteer is required to hold a commercial driver's license to operate the vehicle; or

(2) The volunteer performs a safety-sensitive function for an entity subject to this part and receives remuneration in excess of his or her actual expenses incurred while engaged in the volunteer activity.

Disabling damage means damage that precludes departure of a motor vehicle from the scene of the accident in its usual manner in daylight after simple repairs.

(1) *Inclusion*. Damage to a motor vehicle, where the vehicle could have been driven, but would have been further damaged if so driven.

(2) *Exclusions*. (i) Damage that can be remedied temporarily at the scene of the accident without special tools or parts.

(ii) Tire disablement without other damage even if no spare tire is available.

(iii) Headlamp or tail light damage.

(iv) Damage to turn signals, horn, or windshield wipers, which makes the vehicle inoperable.

DOT or *The Department* means the United States Department of Transportation.

DOT agency means an agency (or ''operating administration'') of the United States Department of Transportation administering regulations requiring drug and alcohol testing. See 14 CFR part 121, appendices I and J; 33 CFR part 95; 46 CFR parts 4, 5, and 16; and 49 CFR parts 199, 219, 382, and 655.

Employer means a recipient or other entity that provides mass transportation service or which performs a safety-sensitive function for such recipient or other entity. This term includes subrecipients, operators, and contractors.

FTA means the Federal Transit Administration, an agency of the U.S. Department of Transportation.

Performing (a safety-sensitive function) means a covered employee is considered to be performing a safety-sensitive function and includes any period in which he or she is actually performing, ready to perform, or immediately available to perform such functions.

Positive rate means the sum of the annual number of positive results for random drug tests conducted under this part plus the annual number of refusals to submit to a random drug test authorized under this part divided by the

sum of the annual number of random drug tests conducted under this part plus the annual number of refusals to submit to a random drug test authorized under this part.

Railroad means:

(1) All forms of non-highway ground transportation that run on rails or electromagnetic guideways, including:

(i) Commuter or other short-haul rail passenger service in a metropolitan or suburban area, as well as any commuter rail service that was operated by the Consolidated Rail Corporation as of January 1, 1979; and

(ii) High speed ground transportation systems that connect metropolitan areas, without regard to whether they use new technologies not associated with traditional railroads.

(2) Such term does not include rapid transit operations within an urban area that are not connected to the general railroad system of transportation.

Recipient means an entity receiving Federal financial assistance under 49 U.S.C. 5307, 5309, or 5311; or under 23 U.S.C. 103(e)(4).

Refuse to submit means any circumstance outlined in 49 CFR 40.191 and 40.261.

Safety-sensitive function means any of the following duties, when performed by employees of recipients, subrecipients, operators, or contractors:

(1) Operating a revenue service vehicle, including when not in revenue service;

(2) Operating a nonrevenue service vehicle, when required to be operated by a holder of a Commercial Driver's License;

(3) Controlling dispatch or movement of a revenue service vehicle;

(4) Maintaining (including repairs, overhaul and rebuilding) a revenue service vehicle or equipment used in revenue service. This section does not apply to the following: an employer who receives funding under 49 U.S.C. 5307 or 5309, is in an area less than 200,000 in population, and contracts out such services; or an employer who receives funding under 49 U.S.C. 5311 and contracts out such services;

(5) Carrying a firearm for security purposes.

Vehicle means a bus, electric bus, van, automobile, rail car, trolley car, trolley bus, or vessel. A mass transit vehicle is a vehicle used for mass transportation or for ancillary services.

Violation rate means the sum of the annual number of results from random alcohol tests conducted under this part that have alcohol concentrations of .04 or greater plus the annual number of refusals to submit to alcohol tests authorized under this part, divided by the sum of the annual number of random alcohol tests conducted under this part plus the annual number of refusals to submit to a drug test authorized under this part.

§ 655.5 Stand-down waivers for drug testing.

(a) An employer subject to this part may petition the FTA for a waiver allowing the employer to stand down, per 49 CFR Part 40, an employee following a report of a laboratory confirmed positive drug test or refusal, pending the outcome of the verification process.

(b) Each petition for a waiver must be in writing and include facts and justification to support the waiver. Each petition must satisfy the requirements for obtaining a waiver, as provided in 49 CFR 40.21.

(c) Each petition for a waiver must be submitted to the Office of Safety and Security, Federal Transit Administration, U.S. Department of Transportation, 400 Seventh Street, SW. Washington, DC 20590.

(d) The Administrator may grant a waiver subject to 49 CFR 40.21(d).

§ 655.6 Preemption of state and local laws.

(a) Except as provided in paragraph (b) of this section, this part preempts any state or local law, rule, regulation, or order to the extent that:

(1) Compliance with both the state or local requirement and any requirement in this part is not possible; or

(2) Compliance with the state or local requirement is an obstacle to the accomplishment and execution of any requirement in this part.

(b) This part shall not be construed to preempt provisions of state criminal laws that impose sanctions for reckless conduct attributed to prohibited drug use or alcohol misuse leading to actual

loss of life, injury, or damage to property, whether the provisions apply specifically to transportation employees or employers or to the general public.

§ 655.7 Starting date for testing programs.

An employer must have an anti-drug and alcohol misuse testing program in place by the date the employer begins operations.

Subpart B—Program Requirements

§ 655.11 Requirement to establish an anti-drug use and alcohol misuse program.

Each employer shall establish an anti-drug use and alcohol misuse program consistent with the requirements of this part.

§ 655.12 Required elements of an anti-drug use and alcohol misuse program.

An anti-drug use and alcohol misuse program shall include the following:

(a) A statement describing the employer's policy on prohibited drug use and alcohol misuse in the workplace, including the consequences associated with prohibited drug use and alcohol misuse. This policy statement shall include all of the elements specified in § 655.15. Each employer shall disseminate the policy consistent with the provisions of § 655.16.

(b) An education and training program which meets the requirements of § 655.14.

(c) A testing program, as described in Subparts C and D of this part, which meets the requirements of this part and 49 CFR Part 40.

(d) Procedures for referring a covered employee who has a verified positive drug test result or an alcohol concentration of 0.04 or greater to a Substance Abuse Professional, consistent with 49 CFR Part 40.

§ 655.13 [Reserved]

§ 655.14 Education and training programs.

Each employer shall establish an employee education and training program for all covered employees, including:

(a) *Education*. The education component shall include display and distribution to every covered employee of: informational material and a community service hot-line telephone number for employee assistance, if available.

(b) *Training*. (1) *Covered employees*. Covered employees must receive at least 60 minutes of training on the effects and consequences of prohibited drug use on personal health, safety, and the work environment, and on the signs and symptoms that may indicate prohibited drug use.

(2) *Supervisors*. Supervisors and/or other company officers authorized by the employer to make reasonable suspicion determinations shall receive at least 60 minutes of training on the physical, behavioral, and performance indicators of probable drug use and at least 60 minutes of training on the physical, behavioral, speech, and performance indicators of probable alcohol misuse.

§ 655.15 Policy statement contents.

The local governing board of the employer or operator shall adopt an anti-drug and alcohol misuse policy statement. The statement must be made available to each covered employee, and shall include the following:

(a) The identity of the person, office, branch and/or position designated by the employer to answer employee questions about the employer's anti-drug use and alcohol misuse programs.

(b) The categories of employees who are subject to the provisions of this part.

(c) Specific information concerning the behavior and conduct prohibited by this part.

(d) The specific circumstances under which a covered employee will be tested for prohibited drugs or alcohol misuse under this part.

(e) The procedures that will be used to test for the presence of illegal drugs or alcohol misuse, protect the employee and the integrity of the drug and alcohol testing process, safeguard the validity of the test results, and ensure the test results are attributed to the correct covered employee.

(f) The requirement that a covered employee submit to drug and alcohol

testing administered in accordance with this part.

(g) A description of the kind of behavior that constitutes a refusal to take a drug or alcohol test, and a statement that such a refusal constitutes a violation of the employer's policy.

(h) The consequences for a covered employee who has a verified positive drug or a confirmed alcohol test result with an alcohol concentration of 0.04 or greater, or who refuses to submit to a test under this part, including the mandatory requirements that the covered employee be removed immediately from his or her safety-sensitive function and be evaluated by a substance abuse professional, as required by 49 CFR Part 40.

(i) The consequences, as set forth in § 655.35 of subpart D, for a covered employee who is found to have an alcohol concentration of 0.02 or greater but less than 0.04.

(j) The employer shall inform each covered employee if it implements elements of an anti-drug use or alcohol misuse program that are not required by this part. An employer may not impose requirements that are inconsistent with, contrary to, or frustrate the provisions of this part.

§ 655.16 Requirement to disseminate policy.

Each employer shall provide written notice to every covered employee and to representatives of employee organizations of the employer's anti-drug and alcohol misuse policies and procedures.

§ 655.17 Notice requirement.

Before performing a drug or alcohol test under this part, each employer shall notify a covered employee that the test is required by this part. No employer shall falsely represent that a test is administered under this part.

§§ 655.18–655.20 [Reserved]

Subpart C—Prohibited Drug Use

§ 655.21 Drug testing.

(a) An employer shall establish a program that provides testing for prohibited drugs and drug metabolites in the following circumstances: pre-employment, post-accident, reasonable suspicion, random, and return to duty/follow-up.

(b) When administering a drug test, an employer shall ensure that the following drugs are tested for:

(1) Marijuana;
(2) Cocaine;
(3) Opiates;
(4) Amphetamines; and
(5) Phencyclidine.

(c) Consumption of these products is prohibited at all times.

§§ 655.22–655.30 [Reserved]

Subpart D—Prohibited Alcohol Use

§ 655.31 Alcohol testing.

(a) An employer shall establish a program that provides for testing for alcohol in the following circumstances: post-accident, reasonable suspicion, random, and return to duty/follow-up. An employer may also conduct pre-employment alcohol testing.

(b) Each employer shall prohibit a covered employee, while having an alcohol concentration of 0.04 or greater, from performing or continuing to perform a safety-sensitive function.

§ 655.32 On duty use.

Each employer shall prohibit a covered employee from using alcohol while performing safety-sensitive functions. No employer having actual knowledge that a covered employee is using alcohol while performing safety-sensitive functions shall permit the employee to perform or continue to perform safety-sensitive functions.

§ 655.33 Pre-duty use.

(a) *General.* Each employer shall prohibit a covered employee from using alcohol within 4 hours prior to performing safety-sensitive functions. No employer having actual knowledge that a covered employee has used alcohol within four hours of performing a safety-sensitive function shall permit the employee to perform or continue to perform safety-sensitive functions.

(b) *On-call employees.* An employer shall prohibit the consumption of alcohol for the specified on-call hours of each covered employee who is on-call. The procedure shall include:

(1) The opportunity for the covered employee to acknowledge the use of alcohol at the time he or she is called to report to duty and the inability to perform his or her safety-sensitive function.

(2) The requirement that the covered employee take an alcohol test, if the covered employee has acknowledged the use of alcohol, but claims ability to perform his or her safety-sensitive function.

§ 655.34 Use following an accident.

Each employer shall prohibit alcohol use by any covered employee required to take a post-accident alcohol test under § 655.44 for eight hours following the accident or until he or she undergoes a post-accident alcohol test, whichever occurs first.

§ 655.35 Other alcohol-related conduct.

(a) No employer shall permit a covered employee tested under the provisions of subpart E of this part who is found to have an alcohol concentration of 0.02 or greater but less than 0.04 to perform or continue to perform safety-sensitive functions, until:

(1) The employee's alcohol concentration measures less than 0.02; or

(2) The start of the employee's next regularly scheduled duty period, but not less than eight hours following administration of the test.

(b) Except as provided in paragraph (a) of this section, no employer shall take any action under this part against an employee based solely on test results showing an alcohol concentration less than 0.04. This does not prohibit an employer with authority independent of this part from taking any action otherwise consistent with law.

§§ 655.36–655.40 [Reserved]

Subpart E—Types of Testing

§ 655.41 Pre-employment drug testing.

(a)(1) Before allowing a covered employee or applicant to perform a safety-sensitive function for the first time, the employer must ensure that the employee takes a pre-employment drug test administered under this part with a verified negative result. An employer may not allow a covered employee, including an applicant, to perform a safety-sensitive function unless the employee takes a drug test administered under this part with a verified negative result.

(2) When a covered employee or applicant has previously failed or refused a pre-employment drug test administered under this part, the employee must provide the employer proof of having successfully completed a referral, evaluation and treatment plan as described in § 655.62.

(b) An employer may not transfer an employee from a nonsafety-sensitive function to a safety-sensitive function until the employee takes a pre-employment drug test administered under this part with a verified negative result.

(c) If a pre-employment drug test is canceled, the employer shall require the covered employee or applicant to take another pre-employment drug test administered under this part with a verified negative result.

(d) When a covered employee or applicant has not performed a safety-sensitive function for 90 consecutive calendar days regardless of the reason, and the employee has not been in the employer's random selection pool during that time, the employer shall ensure that the employee takes a pre-employment drug test with a verified negative result.

§ 655.42 Pre-employment alcohol testing.

An employer may, but is not required to, conduct pre-employment alcohol testing under this part. If an employer chooses to conduct pre-employment alcohol testing, the employer must comply with the following requirements:

(a) The employer must conduct a pre-employment alcohol test before the first performance of safety-sensitive functions by every covered employee (whether a new employee or someone who has transferred to a position involving the performance of safety-sensitive functions).

(b) The employer must treat all covered employees performing safety-sensitive functions the same for the purpose of pre-employment alcohol testing (i.e., you must not test some covered employees and not others).

(c) The employer must conduct the pre-employment tests after making a contingent offer of employment or transfer, subject to the employee passing the pre-employment alcohol test.

(d) The employer must conduct all pre-employment alcohol tests using the alcohol testing procedures set forth in 49 CFR Part 40.

(e) The employer must not allow a covered employee to begin performing safety-sensitive functions unless the result of the employee's test indicates an alcohol concentration of less than 0.02.

§ 655.43 Reasonable suspicion testing.

(a) An employer shall conduct a drug and/or alcohol test when the employer has reasonable suspicion to believe that the covered employee has used a prohibited drug and/or engaged in alcohol misuse.

(b) An employer's determination that reasonable suspicion exists shall be based on specific, contemporaneous, articulable observations concerning the appearance, behavior, speech, or body odors of the covered employee. A supervisor(s), or other company official(s) who is trained in detecting the signs and symptoms of drug use and alcohol misuse must make the required observations.

(c) Alcohol testing is authorized under this section only if the observations required by paragraph (b) of this section are made during, just preceding, or just after the period of the workday that the covered employee is required to be in compliance with this part. An employer may direct a covered employee to undergo reasonable suspicion testing for alcohol only while the employee is performing safety-sensitive functions; just before the employee is to perform safety-sensitive functions; or just after the employee has ceased performing such functions.

(d) If an alcohol test required by this section is not administered within two hours following the determination under paragraph (b) of this section, the employer shall prepare and maintain on file a record stating the reasons the alcohol test was not promptly administered. If an alcohol test required by this section is not administered within eight hours following the determination under paragraph (b) of this section, the employer shall cease attempts to administer an alcohol test and shall state in the record the reasons for not administering the test.

§ 655.44 Post-accident testing.

(a) Accidents. (1) *Fatal accidents.* (i) As soon as practicable following an accident involving the loss of human life, an employer shall conduct drug and alcohol tests on each surviving covered employee operating the mass transit vehicle at the time of the accident. Post-accident drug and alcohol testing of the operator is not required under this section if the covered employee is tested under the fatal accident testing requirements of the Federal Motor Carrier Safety Administration rule 49 CFR 389.303(a)(1) or (b)(1).

(ii) The employer shall also drug and alcohol test any other covered employee whose performance could have contributed to the accident, as determined by the employer using the best information available at the time of the decision.

(2) *Nonfatal accidents.* (i) As soon as practicable following an accident not involving the loss of human life in which a mass transit vehicle is involved, the employer shall drug and alcohol test each covered employee operating the mass transit vehicle at the time of the accident unless the employer determines, using the best information available at the time of the decision, that the covered employee's performance can be completely discounted as a contributing factor to the accident. The employer shall also drug and alcohol test any other covered employee whose performance could have contributed to the accident, as determined by the employer using the best information available at the time of the decision.

(ii) If an alcohol test required by this section is not administered within two hours following the accident, the employer shall prepare and maintain on file a record stating the reasons the alcohol test was not promptly administered. If an alcohol test required by this section is not administered within eight hours following the accident, the employer shall cease attempts to administer an alcohol test and maintain

the record. Records shall be submitted to FTA upon request of the Administrator.

(b) An employer shall ensure that a covered employee required to be drug tested under this section is tested as soon as practicable but within 32 hours of the accident.

(c) A covered employee who is subject to post-accident testing who fails to remain readily available for such testing, including notifying the employer or the employer representative of his or her location if he or she leaves the scene of the accident prior to submission to such test, may be deemed by the employer to have refused to submit to testing.

(d) The decision not to administer a drug and/or alcohol test under this section shall be based on the employer's determination, using the best available information at the time of the determination that the employee's performance could not have contributed to the accident. Such a decision must be documented in detail, including the decision-making process used to reach the decision not to test.

(e) Nothing in this section shall be construed to require the delay of necessary medical attention for the injured following an accident or to prohibit a covered employee from leaving the scene of an accident for the period necessary to obtain assistance in responding to the accident or to obtain necessary emergency medical care.

(f) The results of a blood, urine, or breath test for the use of prohibited drugs or alcohol misuse, conducted by Federal, State, or local officials having independent authority for the test, shall be considered to meet the requirements of this section provided such test conforms to the applicable Federal, State, or local testing requirements, and that the test results are obtained by the employer. Such test results may be used only when the employer is unable to perform a post-accident test within the required period noted in paragraphs (a) and (b) of this section.

§ 655.45 Random testing.

(a) Except as provided in paragraphs (b) through (d) of this section, the minimum annual percentage rate for random drug testing shall be 50 percent of covered employees; the random alcohol testing rate shall be 10 percent. As provided in paragraph (b) of this section, this rate is subject to annual review by the Administrator.

(b) The Administrator's decision to increase or decrease the minimum annual percentage rate for random drug and alcohol testing is based, respectively, on the reported positive drug and alcohol violation rates for the entire industry. All information used for this determination is drawn from the drug and alcohol Management Information System (MIS) reports required by this part. In order to ensure reliability of the data, the Administrator shall consider the quality and completeness of the reported data, may obtain additional information or reports from employers, and may make appropriate modifications in calculating the industry's verified positive results and violation rates. Each year, the Administrator will publish in the FEDERAL REGISTER the minimum annual percentage rates for random drug and alcohol testing of covered employees. The new minimum annual percentage rate for random drug and alcohol testing will be applicable starting January 1 of the calendar year following publication.

(c) Rates for drug testing. (1) When the minimum annual percentage rate for random drug testing is 50 percent, the Administrator may lower this rate to 25 percent of all covered employees if the Administrator determines that the data received under the reporting requirements of § 655.72 for the two preceding consecutive calendar years indicate that the reported positive rate is less than 1.0 percent.

(2) When the minimum annual percentage rate for random drug testing is 25 percent, and the data received under the reporting requirements of § 655.72 for the calendar year indicate that the reported positive rate is equal to or greater than 1.0 percent, the Administrator will increase the minimum annual percentage rate for random drug or random alcohol testing to 50 percent of all covered employees.

(d) Rates for alcohol testing. (1)(i) When the minimum annual percentage rate for random alcohol testing is 25

percent or more, the Administrator may lower this rate to 10 percent of all covered employees if the Administrator determines that the data received under the reporting requirements of § 655.72 for two consecutive calendar years indicate that the violation rate is less than 0.5 percent.

(ii) When the minimum annual percentage rate for random alcohol testing is 50 percent, the Administrator may lower this rate to 25 percent of all covered employees if the Administrator determines that the data received under the reporting requirements of § 655.72 for two consecutive calendar years indicate that the violation rate is less than 1.0 percent but equal to or greater than 0.5 percent.

(2)(i) When the minimum annual percentage rate for random alcohol testing is 10 percent, and the data received under the reporting requirements of § 655.72 for that calendar year indicate that the violation rate is equal to or greater than 0.5 percent, but less than 1.0 percent, the Administrator will increase the minimum annual percentage rate for random alcohol testing to 25 percent of all covered employees.

(ii) When the minimum annual percentage rate for random alcohol testing is 25 percent or less, and the data received under the reporting requirements of § 655.72 for that calendar year indicate that the violation rate is equal to or greater than 1.0 percent, the Administrator will increase the minimum annual percentage rate for random alcohol testing to 50 percent of all covered employees.

(e) The selection of employees for random drug and alcohol testing shall be made by a scientifically valid method, such as a random number table or a computer-based random number generator that is matched with employees' Social Security numbers, payroll identification numbers, or other comparable identifying numbers. Under the selection process used, each covered employee shall have an equal chance of being tested each time selections are made.

(f) The employer shall randomly select a sufficient number of covered employees for testing during each calendar year to equal an annual rate not less than the minimum annual percentage rates for random drug and alcohol testing determined by the Administrator. If the employer conducts random drug and alcohol testing through a consortium, the number of employees to be tested may be calculated for each individual employer or may be based on the total number of covered employees covered by the consortium who are subject to random drug and alcohol testing at the same minimum annual percentage rate under this part.

(g) Each employer shall ensure that random drug and alcohol tests conducted under this part are unannounced and unpredictable, and that the dates for administering random tests are spread reasonably throughout the calendar year. Random testing must be conducted at all times of day when safety-sensitive functions are performed.

(h) Each employer shall require that each covered employee who is notified of selection for random drug or random alcohol testing proceed to the test site immediately. If the employee is performing a safety-sensitive function at the time of the notification, the employer shall instead ensure that the employee ceases to perform the safety-sensitive function and proceeds to the testing site immediately.

(i) A covered employee shall only be randomly tested for alcohol misuse while the employee is performing safety-sensitive functions; just before the employee is to perform safety-sensitive functions; or just after the employee has ceased performing such functions. A covered employee may be randomly tested for prohibited drug use anytime while on duty.

(j) If a given covered employee is subject to random drug and alcohol testing under the testing rules of more than one DOT agency for the same employer, the employee shall be subject to random drug and alcohol testing at the percentage rate established for the calendar year by the DOT agency regulating more than 50 percent of the employee's function.

(k) If an employer is required to conduct random drug and alcohol testing under the drug and alcohol testing rules of more than one DOT agency, the employer may—

(1) Establish separate pools for random selection, with each pool containing the covered employees who are subject to testing at the same required rate; or

(2) Randomly select such employees for testing at the highest percentage rate established for the calendar year by any DOT agency to which the employer is subject.

§ 655.46 Return to duty following refusal to submit to a test, verified positive drug test result and/or breath alcohol test result of 0.04 or greater.

Where a covered employee refuses to submit to a test, has a verified positive drug test result, and/or has a confirmed alcohol test result of 0.04 or greater, the employer, before returning the employee to duty to perform a safety-sensitive function, shall follow the procedures outlined in 49 CFR Part 40.

§ 655.47 Follow-up testing after returning to duty.

An employer shall conduct follow-up testing of each employee who returns to duty, as specified in 49 CFR Part 40, subpart O.

§ 655.48 Retesting of covered employees with an alcohol concentration of 0.02 or greater but less than 0.04.

If an employer chooses to permit a covered employee to perform a safety-sensitive function within 8 hours of an alcohol test indicating an alcohol concentration of 0.02 or greater but less than 0.04, the employer shall retest the covered employee to ensure compliance with the provisions of § 655.35. The covered employee may not perform safety-sensitive functions unless the confirmation alcohol test result is less than 0.02.

§ 655.49 Refusal to submit to a drug or alcohol test.

(a) Each employer shall require a covered employee to submit to a post-accident drug and alcohol test required under § 655.44, a random drug and alcohol test required under § 655.45, a reasonable suspicion drug and alcohol test required under § 655.43, or a follow-up drug and alcohol test required under § 655.47. No employer shall permit an employee who refuses to submit to such a test to perform or continue to perform safety-sensitive functions.

(b) When an employee refuses to submit to a drug or alcohol test, the employer shall follow the procedures outlined in 49 CFR Part 40.

§ 655.50 [Reserved]

Subpart F—Drug and Alcohol Testing Procedures

§ 655.51 Compliance with testing procedures requirements.

The drug and alcohol testing procedures in 49 CFR Part 40 apply to employers covered by this part, and must be read together with this part, unless expressly provided otherwise in this part.

§ 655.52 Substance abuse professional (SAP).

The SAP must perform the functions in 49 CFR Part 40.

§ 655.53 Supervisor acting as collection site personnel.

An employer shall not permit an employee with direct or immediate supervisory responsibility or authority over another employee to serve as the urine collection person, breath alcohol technician, or saliva-testing technician for a drug or alcohol test of the employee.

§§ 655.54–655.60 [Reserved]

Subpart G—Consequences

§ 655.61 Action when an employee has a verified positive drug test result or has a confirmed alcohol test result of 0.04 or greater, or refuses to submit to a test.

(a) (1) Immediately after receiving notice from a medical review officer (MRO) or a consortium/third party administrator (C/TPA) that a covered employee has a verified positive drug test result, the employer shall require that the covered employee cease performing a safety-sensitive function.

(2) Immediately after receiving notice from a Breath Alcohol Technician (BAT) that a covered employee has a confirmed alcohol test result of 0.04 or greater, the employer shall require

that the covered employee cease performing a safety-sensitive function.

(3) If an employee refuses to submit to a drug or alcohol test required by this part, the employer shall require that the covered employee cease performing a safety-sensitive function.

(b) Before allowing the covered employee to resume performing a safety-sensitive function, the employer shall ensure the employee meets the requirements of 49 CFR Part 40 for returning to duty, including taking a return to duty drug and/or alcohol test.

§ 655.62 Referral, evaluation, and treatment.

If a covered employee has a verified positive drug test result, or has a confirmed alcohol test of 0.04 or greater, or refuses to submit to a drug or alcohol test required by this part, the employer shall advise the employee of the resources available for evaluating and resolving problems associated with prohibited drug use and alcohol misuse, including the names, addresses, and telephone numbers of substance abuse professionals (SAPs) and counseling and treatment programs.

§§ 655.63–655.70 [Reserved]

Subpart H—Administrative Requirements

§ 655. 71 Retention of records.

(a) *General requirement*. An employer shall maintain records of its anti-drug and alcohol misuse program as provided in this section. The records shall be maintained in a secure location with controlled access.

(b) *Period of retention*. In determining compliance with the retention period requirement, each record shall be maintained for the specified minimum period of time as measured from the date of the creation of the record. Each employer shall maintain the records in accordance with the following schedule:

(1) *Five years*. Records of covered employee verified positive drug or alcohol test results, documentation of refusals to take required drug or alcohol tests, and covered employee referrals to the substance abuse professional, and copies of annual MIS reports submitted to FTA.

(2) *Two years*. Records related to the collection process and employee training.

(3) *One year*. Records of negative drug or alcohol test results.

(c) *Types of records*. The following specific records must be maintained:

(1) Records related to the collection process:

(i) Collection logbooks, if used.

(ii) Documents relating to the random selection process.

(iii) Documents generated in connection with decisions to administer reasonable suspicion drug or alcohol tests.

(iv) Documents generated in connection with decisions on post-accident drug and alcohol testing.

(v) MRO documents verifying existence of a medical explanation of the inability of a covered employee to provide an adequate urine or breathe sample.

(2) Records related to test results:

(i) The employer's copy of the custody and control form.

(ii) Documents related to the refusal of any covered employee to submit to a test required by this part.

(iii) Documents presented by a covered employee to dispute the result of a test administered under this part.

(3) Records related to referral and return to duty and follow-up testing: Records concerning a covered employee's entry into and completion of the treatment program recommended by the substance abuse professional.

(4) Records related to employee training:

(i) Training materials on drug use awareness and alcohol misuse, including a copy of the employer's policy on prohibited drug use and alcohol misuse.

(ii) Names of covered employees attending training on prohibited drug use and alcohol misuse and the dates and times of such training.

(iii) Documentation of training provided to supervisors for the purpose of qualifying the supervisors to make a determination concerning the need for drug and alcohol testing based on reasonable suspicion.

(iv) Certification that any training conducted under this part complies

with the requirements for such training.

(5) Copies of annual MIS reports submitted to FTA.

§ 655.72 Reporting of results in a management information system.

(a) Each recipient shall annually prepare and maintain a summary of the results of its anti-drug and alcohol misuse testing programs performed under this part during the previous calendar year.

(b) When requested by FTA, each recipient shall submit to FTA's Office of Safety and Security, or its designated agent, by March 15, a report covering the previous calendar year (January 1 through December 31) summarizing the results of its anti-drug and alcohol misuse programs.

(c) Each recipient shall be responsible for ensuring the accuracy and timeliness of each report submitted by an employer, contractor, consortium or joint enterprise or by a third party service provider acting on the recipient's or employer's behalf.

(d) *Drug use information: Long Form.* Each report that contains information on verified positive drug test results shall be submitted on the FTA Drug Testing Management Information System (MIS) Data Collection Form (Appendix A of this part) and shall include the following informational elements:

(1) Number of FTA covered employees by employee category.

(2) Number of covered employees subject to testing under the anti-drug regulations of the other DOT operating administrations subject to 49 CFR Part 40.

(3) Number of specimens collected by type of test (i.e., pre-employment, follow-up, random, etc.) and employee category.

(4) Number of positives verified by a Medical Review Officer (MRO) by type of test, type of drug, and employee category.

(5) Number of negatives verified by an MRO by type of test and employee category.

(6) Number of persons denied a position as a covered employee following a verified positive drug test.

(7) Number of covered employees verified positive by an MRO or who refused to submit to a drug test, who were returned to duty in covered positions during the reporting period (having complied with the recommendations of a substance abuse professional as described in § 655.61).

(8) Number of employees with tests verified positive by an MRO for multiple drugs.

(9) Number of covered employees who were administered drug and alcohol tests at the same time, with both a verified positive drug test result and an alcohol test result indicating an alcohol concentration of 0.04 or greater.

(10) Number of covered employees who refused to submit to a random drug test required under this part.

(11) Number of covered employees who refused to submit to a non-random drug test required under this part.

(12) Number of covered employees and supervisors who received training during the reporting period.

(13) Number of fatal and nonfatal accidents which resulted in a verified positive post-accident drug test.

(14) Number of fatalities resulting from accidents which resulted in a verified positive post-accident drug test.

(15) Identification of FTA funding source(s).

(e) *Drug Use Information: Short Form.* If all drug test results were negative during the reporting period, the employer must use the ''EZ form'' (Appendix B of this part). It shall contain:

(1) Number of FTA covered employees.

(2) Number of covered employees subject to testing under the anti-drug regulation of the other DOT operating administrations subject to 49 CFR Part 40.

(3) Number of specimens collected and verified negative by type of test and employee category.

(4) Number of covered employees verified positive by an MRO or who refused to submit to a drug test prior to the reporting period and who were returned to duty in covered positions during the reporting period (having complied with the recommendations of

a substance abuse professional as described in § 655.62).

(5) Number of covered employees who refused to submit to a non-random drug test required under this part.

(6) Number of covered employees and supervisors who received training during the reporting period.

(7) Identification of FTA funding source(s).

(f) *Alcohol misuse information: Long Form.* Each report that contains information on an alcohol screening test result of 0.02 or greater or a violation of the alcohol misuse provisions of this part shall be submitted on the FTA Alcohol Testing Management (MIS) Data Collection Form (Appendix C of this part) and shall include the following informational elements:

(1) Number of FTA covered employees by employee category.

(2) (i) Number of screening tests by type of test and employee category.

(ii) Number of confirmed tests, by type of test and employee category.

(3) Number of confirmed alcohol tests indicating an alcohol concentration of 0.02 or greater but less than 0.04, by type of test and employee category.

(4) Number of confirmed alcohol tests indicating an alcohol concentration of 0.04 or greater, by type of test and employee category.

(5) Number of covered employees with a confirmed alcohol test indicating an alcohol concentration of 0.04 or greater who were returned to duty in covered positions during the reporting period (having complied with the recommendation of a substance abuse professional as described in § 655.61).

(6) Number of fatal and nonfatal accidents which resulted in a confirmed post-accident alcohol test indicating an alcohol concentration of 0.04 or greater.

(7) Number of fatalities resulting from accidents which resulted in a confirmed post-accident alcohol test indicating an alcohol concentration of 0.04 or greater.

(8) Number of covered employees who were found to have violated other provisions of subpart B of this part and the action taken in response to the violation.

(9) Number of covered employees who were administered alcohol and drug tests at the same time, with a positive drug test result and an alcohol test result indicating an alcohol concentration of 0.04 or greater.

(10) Number of covered employees who refused to submit to a random alcohol test required under this part.

(11) Number of covered employees who refused to submit to a non-random alcohol test required under this part.

(12) Number of supervisors who have received training during the reporting period in determining the existence of reasonable suspicion of alcohol misuse.

(13) Identification of FTA funding source(s).

(g) *Alcohol Misuse Information: Short Form.* If an employer has no screening test results of 0.02 or greater and no violations of the alcohol misuse provisions of this part, the employer must use the ''EZ'' form (Appendix D of this part). It shall contain (This report may only be submitted if the program results meet these criteria.):

(1) Number of FTA covered employees.

(2) Number of alcohol tests conducted with results less than 0.02 by type of test and employee category.

(3) Number of employees with confirmed alcohol test results indicating an alcohol concentration of 0.04 or greater prior to the reporting period and who were returned to duty in a covered position during the reporting period.

(4) Number of covered employees who refused to submit to a random alcohol test required under this part.

(5) Number of supervisors who have received training in determining the existence of reasonable suspicion of alcohol misuse during the reporting period.

(6) Identification of FTA funding source(s).

§ 655.73 Access to facilities and records.

(a) Except as required by law, or expressly authorized or required in this section, no employer may release information pertaining to a covered employee that is contained in records required to be maintained by § 655.71.

(b) A covered employee is entitled, upon written request, to obtain copies

of any records pertaining to the covered employee's use of prohibited drugs or misuse of alcohol, including any records pertaining to his or her drug or alcohol tests. The employer shall provide promptly the records requested by the employee. Access to a covered employee's records shall not be contingent upon the employer's receipt of payment for the production of those records.

(c) An employer shall permit access to all facilities utilized and records compiled in complying with the requirements of this part to the Secretary of Transportation or any DOT agency with regulatory authority over the employer or any of its employees or to a State oversight agency authorized to oversee rail fixed guideway systems.

(d) An employer shall disclose data for its drug and alcohol testing programs, and any other information pertaining to the employer's anti-drug and alcohol misuse programs required to be maintained by this part, to the Secretary of Transportation or any DOT agency with regulatory authority over the employer or covered employee or to a State oversight agency authorized to oversee rail fixed guideway systems, upon the Secretary's request or the respective agency's request.

(e) When requested by the National Transportation Safety Board as part of an accident investigation, employers shall disclose information related to the employer's drug or alcohol testing related to the accident under investigation.

(f) Records shall be made available to a subsequent employer upon receipt of a written request from the covered employee. Subsequent disclosure by the employer is permitted only as expressly authorized by the terms of the covered employee's request.

(g) An employer may disclose information required to be maintained under this part pertaining to a covered employee to the employee or the decisionmaker in a lawsuit, grievance, or other proceeding initiated by or on behalf of the individual, and arising from the results of a drug or alcohol test under this part (including, but not limited to, a worker's compensation, unemployment compensation, or other proceeding relating to a benefit sought by the covered employee.)

(h) An employer shall release information regarding a covered employee's record as directed by the specific, written consent of the employee authorizing release of the information to an identified person.

(i) An employer may disclose drug and alcohol testing information required to be maintained under this part, pertaining to a covered employee, to the State oversight agency or grantee required to certify to FTA compliance with the drug and alcohol testing procedures of 49 CFR parts 40 and 655.

§§ 655.74–655.80 [Reserved]

Subpart I—Certifying Compliance

§ 655.81 Grantee oversight responsibility.

A grantee shall ensure that the recipients of funds under 49 U.S.C. 5307, 5309, 5311 or 23 U.S.C. 103(e)(4) comply with this part.

§ 655.82 Compliance as a condition of financial assistance.

(a) *General.* A recipient may not be eligible for Federal financial assistance under 49 U.S.C. 5307, 5309, or 5311 or under 23 U.S.C. 103(e)(4), if a recipient fails to establish and implement an anti-drug and alcohol misuse program as required by this part. Failure to certify compliance with these requirements, as specified in § 655.83, may result in the suspension of a grantee's eligibility for Federal funding.

(b) *Criminal violation.* A recipient is subject to criminal sanctions and fines for false statements or misrepresentations under 18 U.S.C. 1001.

(c) *State's role.* Each State shall certify compliance on behalf of its 49 U.S.C. 5307, 5309, 5311 or 23 U.S.C. 103(e)(4) subrecipients, as applicable. In so certifying, the State shall ensure that each subrecipient is complying with the requirements of this part. A section 5307, 5309, 5311 or 103(e)(4) subrecipient, through the administering State, is subject to suspension of funding from the State if such subrecipient is not in compliance with this part.

§ 655.83 Requirement to certify compliance.

(a) A recipient of FTA financial assistance shall annually certify compliance, as set forth in § 655.82, to the applicable FTA Regional Office.

(b) A certification must be authorized by the organization's governing board or other authorizing official, and must be signed by a party specifically authorized to do so.

(c) A recipient will be ineligible for further FTA financial assistance if the recipient fails to establish and implement an anti-drug and alcohol misuse program in accordance with this part.

APPENDIX A TO PART 655—DRUG TESTING MANAGEMENT INFORMATION SYSTEM (MIS) DATA COLLECTION FORM

INSTRUCTIONS

The following instructions are to be used as a guide for completing the drug testing information in the Federal Transit Administration (FTA) **Drug Testing MIS Data Collection Form**. These instructions outline and explain the information requested and indicate the probable sources for this information. A sample testing results table with a narrative explanation is provided on pages iii-v as an example to facilitate the process of completing the form correctly.

This reporting form includes six sections. Collectively, these sections address the data elements required in the FTA and the U.S. Department of Transportation (DOT) drug testing regulations. The six sections, the page number for the instructions, and the page location on the reporting form are:

Section	Instructions Page	Reporting Form Page
A. EMPLOYER INFORMATION	i	1
B. COVERED EMPLOYEES	i	2
C. DRUG TESTING INFORMATION	ii-v	3-4
D. OTHER DRUG TESTING/PROGRAM INFORMATION	v	5
E. DRUG TRAINING/EDUCATION	vi	5
F. FTA FUNDING SOURCES	vi	5

Page 1 **EMPLOYER INFORMATION** (Section A) requires the name of the employer for which the report is done, a current address, contact name, and phone number. Below this, information must be entered for the consortium used (if applicable). Finally, a signature, title and date are required certifying the correctness and completeness of the form. Note: A separate report must be submitted by each FTA recipient for each of its contract service and contract maintenance providers covered by the FTA drug testing regulation.

Page 2 **COVERED EMPLOYEES** (Section B) requires a count for each employee category that must be tested under the FTA drug testing regulation. The employee categories are: Revenue Service Vehicle Operation, Revenue Service Vehicle and Equipment Maintenance, Revenue Service Vehicle Control/Dispatch, Commercial Driver License (CDL) Holders who operate Non-Revenue Service Vehicles, and Security Personnel who carry Firearms. The most likely source for this information is the employer's personnel department. These counts should be based on the recipient's or contractor's records for the reported year. The **TOTAL** is a count of **all** covered employees for **all** categories combined, i.e., the sum of the columns.

Additional information must be completed if the employer has personnel who perform duties also covered by the anti-drug rule of the United States Coast Guard (USCG). NUMBER OF EMPLOYEES COVERED BY THE USCG, requires that you identify the number of employees in each employee category.

Section C is used to summarize the drug testing results for applicants and covered employees. There are six categories of testing to be completed. The first part of the table is where you enter the data on pre-employment testing. The following five parts are for entering drug testing data on random, post-accident, reasonable suspicion, return to duty and follow-up testing, respectively. Items necessary to complete these tables include:

1) the number of specimens collected in each employee category;
2) the number of specimens tested which were verified negative and verified positive for any drug(s); and
3) individual counts of those specimens which were verified positive for each of the five drugs.

Do not include results of quality control (QC) samples submitted to the testing laboratory in any of the tables.

A sample table with detailed instructions is provided for the first part, PRE-EMPLOYMENT testing information. The format and explanations used for the sample apply to all six parts of the table in Section C.

Information on actions taken with those persons testing positive is required at the end of both pages. Specific instructions for providing this latter information are given after the instructions for completing the table in Section C.

Page 3

DRUG TESTING INFORMATION (Section C) requires information for drug testing by category of testing. All numbers entered into the pre-employment category section of the table should be separated into the category of employment for which the person was applying or transferring. The other categories are for employee testing and require information for employees in **covered positions** only. Each part of this table must be completed for each category of testing. These categories include: (1) random, (2) post-accident, (3) reasonable suspicion, (4) return to duty, and (5) follow-up testing. These numbers **do not** include refusals for testing. A sample section of the table with example numbers is presented on page iv.

Three types of information are necessary to complete the left side of this table. The first blank column with the heading **"NUMBER OF SPECIMENS COLLECTED,"** requires a count for all collected specimens by employee category. The second blank column with the heading **"NUMBER OF SPECIMENS VERIFIED NEGATIVE,"** require a count for all completed tests by employee category that were verified negative by your Medical Review Officer (MRO).

The third blank column with the heading **"NUMBER OF SPECIMENS VERIFIED POSITIVE FOR ONE OR MORE OF THE FIVE DRUGS,"** refers to the number of specimens provided by applicants or employees that were verified positive. "Verified positive" means the results were verified by your MRO.

The right hand portion of this table, with the heading **"NUMBER OF SPECIMENS VERIFIED POSITIVE FOR EACH TYPE OF DRUG,"** requires counts of positive tests for each of the five drugs for which tests were done, i.e., marijuana (THC), cocaine, phencyclidine (PCP), opiates, and amphetamines. The number of specimens positive for each drug should be entered in the appropriate column for that drug type. Again, "verified positive" refers to test results verified by your MRO.

If an applicant or employee tested positive for more than one drug; for example, both marijuana and cocaine, that person's positive results would be included once in each of the appropriate columns (marijuana and cocaine).

Each column in the table should be added and the answer entered in the row marked**: "TOTAL".**

A sample table is provided on page iv with example numbers.

Page 3 Below the part of the table containing pre-employment testing information is a box with the heading **"Number of persons denied a position as a covered employee following a verified positive drug test".** This is simply a count of those persons who were not placed in a covered position because they tested positive for one or more drugs.

SAMPLE APPLICANT TEST RESULTS TABLE

The following example is for Section C, **DRUG TESTING INFORMATION**, which summarizes pre-employment testing results. The procedures detailed here also apply to the other categories of testing in Section C which require you to summarize testing results for employees. This example uses the categories "Revenue Vehicle Operation" and "Armed Security Personnel" to illustrate the procedures for completing the form.

A Urine specimens were collected for 157 applicants for revenue service vehicle operation positions during the reporting year. This information is entered in the first blank column of the table in the row marked "Revenue Vehicle Operation".

B The Medical Review Officer (MRO) for the employer reported that 153 of those 157 specimens from applicants for revenue service vehicle operation positions were negative (i.e., no drugs were detected). Enter this information in the second blank column of the table in the row marked "Revenue Vehicle Operations".

C The MRO for the employer reported that 4 of those 157 specimens from applicants for revenue service vehicle operation positions were positive (i.e., a drug or drugs were detected). Enter this information in the third blank column of the table in the row marked "Revenue Vehicle Operation".

D

With the 4 specimens that tested positive, the following drugs were detected:

Specimen	Drugs
#1	Marijuana
#2	Amphetamines
#3	Marijuana and Cocaine (Multi-drug specimen)
#4	Marijuana

Marijuana was detected in three (3) specimens, cocaine in one (1), and amphetamines in one (1). This information is entered in the columns on the right hand side of the table under each of these drugs. Two different drugs were detected in specimen #3 (multi-drug) so an entry is made in both the marijuana and the cocaine column for this specimen. Information on multi-drug specimens must also be entered in Section D, **OTHER DRUG TESTING/PROGRAM INFORMATION**, on page 5 of the reporting form.

Please note that the sample data collection form also has information for armed security personnel on line two. The same procedures outlined for revenue service vehicle operation should be followed for entering the data on armed security personnel. With applicants for armed security personnel positions, 107 specimens were collected resulting in 105 verified negatives and 2 verified positives – 1 for marijuana and 1 for opiates. This information is entered in the row marked "Armed Security Personnel".

E

The last row, marked "TOTAL", requires you to add the numbers in each of the columns. With this example, 157 specimens from applicants for revenue service vehicle operation positions were collected and 107 for applicants for armed security personnel positions. The total for that columns would be 264 (i.e., 157 + 107). The same procedure should be used for each column, i.e., add all the numbers in that column and place the answer in the last row.

PRE-EMPLOYMENT								
EMPLOYEE CATEGORY	NUMBER OF SPECIMENS COLLECTED	NUMBER OF SPECIMENS VERIFIED NEGATIVE	NUMBER OF SPECIMENS VERIFIED POSITIVE FOR ONE OR MORE OF THE FIVE DRUGS	NUMBER OF SPECIMENS VERIFIED POSITIVE FOR EACH TYPE OF DRUG				
				MARIJUANA (THC)	COCAINE	PHENCY-CLIDINE (PC)	OPIATES	AMPHET-AMINES
REVENUE VEHICLE OPERATION	157	153	4	3	1	0	0	1
ARMED SECURITY PERSONNEL	107	105	2	1	0	0	1	0
TOTAL	264	258	6	4	1	0	1	1

A B C D E

Note that adding up the numbers for each type of drug in a row ("NUMBER OF SPECIMENS VERIFIED POSITIVE FOR EACH TYPE OF DRUG") will not always match the number entered in the third column, "NUMBER OF SPECIMENS VERIFIED POSITIVE FOR ONE OR MORE OF THE FIVE DRUGS". The total for the numbers on the right hand side of the table may differ from the number of specimens testing positive since some specimens may contain more than one drug.

Remember that the same procedures indicated above are to be used for completing all of the categories for testing in Section C.

Page 4 Following the table that summarizes **DRUG TESTING INFORMATION**, you must provide counts of fatal and non-fatal accidents and fatalities which resulted in positive post-accident drug tests for any employee involved in the accident. This information should be available from the safety program manager or the drug program manager.

Page 4 Also following the table that summarizes **DRUG TESTING INFORMATION**, you must provide a count of employees returned to duty during this reporting period who had a verified positive drug test or refused a drug test required under the FTA rule. This information should be available from the personnel office and/or drug program manager.

Page 5 **OTHER DRUG TESTING/PROGRAM INFORMATION** (Section D) requires that you complete a table dealing with specimens positive for more than one drug, employees testing positive for both drugs and alcohol, and a table dealing with employees who refused to submit to a drug test.

Page 5 **SPECIMENS VERIFIED POSITIVE FOR MORE THAN ONE DRUG** requires information on specimens that contained more than one drug. Indicate the **EMPLOYEE CATEGORY** and the **NUMBER OF VERIFIED POSITIVES**. Then specify the combination of drugs reported as positive by placing the number in the appropriate columns. For example, if marijuana and cocaine were detected in 3 revenue vehicle operator specimens, then you would write "Revenue Vehicle Operation" as the employee category, "3" as the number of verified positives, and "3" in the columns for "Marijuana" and "Cocaine". If marijuana and opiates were detected in 2 revenue vehicle operator specimens, then you would write "Revenue Vehicle Operation" as the employee category, "2" as the number of verified positives, and "2" in the columns for "Marijuana" and "Opiates".

Page 5 Next you must provide a count of **employees administered drug <u>and</u> alcohol tests at the same time resulting in a verified positive drug test <u>and</u> an alcohol test indicating an alcohol concentration of 0.04 or greater.**

Page 5 **EMPLOYEES WHO REFUSED TO SUBMIT TO A DRUG TEST** requires information on the **NUMBER OF COVERED EMPLOYEES** who refused to submit to a **random** or **non-random** (pre-employment, post-accident, reasonable suspicion, return to duty, or follow-up) drug test required under the FTA regulation.

Page 5 **DRUG TRAINING/EDUCATION** (Section E) requires information on the number of covered employees and supervisory personnel who have received drug training during the current reporting period.

Page 5 **FTA FUNDING SOURCES** (Section F) asks for the sources of FTA funds for your organization. Simply place a check mark by each applicable funding section(s).

For FTA Use Only

FTA DRUG TESTING MIS DATA COLLECTION FORM **OMB No. 2132-0556**

YEAR COVERED BY THIS REPORT: 20 _____

A. EMPLOYER INFORMATION

Name _____

Address _____

_____

Contact _____

Phone _____

Consortium Used (if applicable)

Name _____

Address _____

_____

Contact _____

Phone _____

I, the undersigned, certify that the information provided on this Federal Transit Administration Drug Testing Management Information System Data Collection Form is, to the best of my knowledge and belief, true, correct, and complete for the period stated.

_____ _____
Signature Date of Signature

_____
Title

Title 18, U.S.C. Section 1001, makes it a criminal offense subject to a maximum fine of $10,000, or imprisonment for not more than 5 years, or both, to knowingly and willfully make or cause to be made any false or fraudulent statements or representations in any matter within the jurisdiction of any agency of the United States.

The Federal Transit Administration estimates that the average burden for this report form is 8 hours. You may submit any comments concerning the accuracy of this burden estimate or any suggestions for reducing the burden to: Office of Safety and Security (TPM-30), Federal Transit Administration; 400 7th St., S.W.; Washington, D.C. 20590; OR Office of Management and Budget, Paperwork Reduction Project (2132-0556); Washington, D.C. 20503.

B. COVERED EMPLOYEES

COVERED EMPLOYEES		
EMPLOYEE CATEGORY	NUMBER OF FTA COVERED EMPLOYEES	NUMBER OF EMPLOYEES COVERED BY THE USCG
Revenue Vehicle Operation		
Revenue Vehicle and Equipment Maintenance		
Revenue Vehicle Control/Dispatch		
CDL/Non-Revenue Vehicle		
Armed Security Personnel		
TOTAL		

READ BEFORE COMPLETING THE REMAINDER OF THIS FORM:

1. All items refer to the **current** reporting period **only** (for example, January 1, 1994 – December 31, 1994

2. This report is only for testing **REQUIRED BY THE FEDERAL TRANSIT ADMINISTRATION (FTA) AND THE U.S. DEPARTMENT OF TRANSPORTATION (DOT).**

   - Results should be reported only for employees in **COVERED POSITIONS** as defined by the FTA drug testing regulation.

   - The information requested should only include testing for marijuana (THC), cocaine, phencyclidine (PCP), opiates, and amphetamines using the standard procedures required by DOT regulation 49 CFR Part 40.

3. Information on refusals for testing should only be reported in Section D ["OTHER DRUG TESTING INFORMATION"]. Do not include refusals for testing in other sections of this report.

4. Do not include the results of any quality control (QC) samples submitted to the testing laboratory in any of the tables.

5. Complete all items; DO NOT LEAVE ANY ITEM BLANK. If the value for an item is zero (0), place a zero (0) on the form.

This part of the form requires information on VERIFIED POSITIVE and VERIFIED NEGATIVE drug tests. These are the results that are reported to you by your Medical Review Officer (MRO).

C. DRUG TESTING INFORMATION

EMPLOYEE CATEGORY	NUMBER OF SPECIMENS COLLECTED	NUMBER OF SPECIMENS VERIFIED NEGATIVE	NUMBER OF SPECIMENS VERIFIED POSITIVE FOR ONE OR MORE OF THE FIVE DRUGS	NUMBER OF SPECIMENS VERIFIED POSITIVE FOR EACH TYPE OF DRUG				
				Mar-juana (THC)	Cocaine	Phency-clidine (PC)	Opiates	Amphet-amines
PRE-EMPLOYMENT								
Revenue Vehicle Operations								
Revenue Vehicle and Equipment Maintenance								
Revenue Vehicle Control/Dispatch								
CDL/Non-Revenue Vehicle								
Armed Security Personnel								
Total								
RANDOM								
Revenue Vehicle Operation								
Revenue Vehicle and Equipment Maintenance								
Revenue Vehicle Control/Dispatch								
CDL/Non-Revenue Vehicle								
Armed Security Personnel								
Total								
POST-ACCIDENT								
Revenue Vehicle Operation								
Revenue Vehicle and Equipment Maintenance								
Revenue Vehicle Control/Dispatch								
CDL/Non-Revenue Vehicle								
Armed Security Personnel								
Total								

Number of persons denied a position as a covered employee following a verified positive drug test:	

C. DRUG TESTING INFORMATION (cont.)

EMPLOYEE CATEGORY	NUMBER OF SPECIMENS COLLECTED	NUMBER OF SPECIMENS VERIFIED NEGATIVE	NUMBER OF SPECIMENS VERIFIED POSITIVE FOR ONE OR MORE OF THE FIVE DRUGS	NUMBER OF SPECIMENS VERIFIED POSITIVE FOR EACH TYPE OF DRUG				
				Mar-juana (THC)	Cocaine	Phency-clidine (PC)	Opiates	Amphet-amines
REASONABLE SUSPICION								
Revenue Vehicle Operation								
Revenue Vehicle and Equipment Maintenance								
Revenue Vehicle Control/Dispatch								
CDL/Non-Revenue Vehicle								
Armed Security Personnel								
Total								
RETURN TO DUTY								
Revenue Vehicle Operations								
Revenue Vehicle and Equipment Maintenance								
Revenue Vehicle Control/Dispatch								
CDL/Non-Revenue Vehicle								
Armed Security Personnel								
Total								
FOLLOW-UP								
Revenue Vehicle Operation								
Revenue Vehicle and Equipment Maintenance								
Revenue Vehicle Control/Dispatch								
CDL/Non-Revenue Vehicle								
Armed Security Personnel								
Total								

Number of accidents, as defined by the FTA drug testing regulation, which resulted in a positive post-accident drug test:	FATAL	NON-FATAL
Number of fatalities resulting from accidents which resulted in a positive post-accident drug test:		
Number of employees returned to duty during this reporting period who had a verified positive drug test or refused a drug test required under the FTA rule:		

D. OTHER DRUG TESTING/PROGRAM INFORMATION

SPECIMENS VERIFIED POSITIVE FOR MORE THAN ONE DRUG						
EMPLOYEE CATEGORY	NUMBER OF VERIFIED POSITIVES	Marijuana (THC)	Cocaine	Phency-clidine (PCP)	Opiates	Amphet-amines

Number of employees administered drug and alcohol tests at the same time resulting in a verified positive drug test and an alcohol test indicating an alcohol concentration of 0.04 or greater:	
EMPLOYEES WHO REFUSED TO SUBMIT TO A DRUG TEST	Number
Covered employees who refused to submit to a random drug test required under the FTA regulation:	
Covered employees who refused to submit to a non-random drug test required under the FTA regulation:	

E. DRUG TRAINING/EDUCATION

TRAINING DURING CURRENT REPORTING PERIOD	Number
Covered employees who have received at least 60 minutes of initial training on the consequences, manifestations, and behavioral cues of drug use as required by the FTA drug testing regulation:	
Supervisory personnel who have received 60 minutes of initial training on the specific contemporaneous physical, behavioral, and performance indicators of probable drug use as required by the FTA drug testing regulation:	

F. FTA FUNDING SOURCES

FTA FUNDING SOURCES				
Check all sections that apply:	5307	5309	5310	5311

APPENDIX B TO PART 655—DRUG TESTING MANAGEMENT INFORMATION SYSTEM (MIS)''EZ'' DATA COLLECTION FORM

INSTRUCTIONS

The following instructions are to be used as a guide for completing the Federal Transit Administration (FTA) **Drug Testing MIS "EZ" Data Collection Form**. This form should only be used if there are **no positive tests** to be reported by your company. These instructions outline and explain the information requested and indicate the probable sources for this information. This reporting form includes four sections. These sections address the data elements required in the FTA and the U.S. Department of Transportation (DOT) drug testing regulations.

SECTION A – EMPLOYER INFORMATION requires the company name for which the report is done, a current address, contact name, and phone number. Below this, information must be entered for the consortium used (if applicable). Finally, a signature, title, and date are required certifying the correctness and completeness of the form. Also indicate the year covered by this report. Note: A separate report must be submitted by each FTA recipient for each of its contract service and contract maintenance providers covered by the FTA drug testing regulation.

SECTION B – COVERED EMPLOYEES requires a count for each employee category that must be tested under the FTA drug testing regulation. The employee categories are: Revenue Service Vehicle Operation, Revenue Service Vehicle and Equipment Maintenance, Revenue Service Vehicle Control/Dispatch, Commercial Driver License (CDL) Holders who operate Non-Revenue Service Vehicles, and Security Personnel who carry Firearms. The most likely source for this information is the employer's personnel department. These counts should be based on the recipient's or contractor's records for the reported year. The TOTAL is a count of **all** covered employees for **all** categories combined, i.e., the sum of the columns.

Additional information must be completed if the employer has personnel who perform duties also covered by the anti-drug rule of the United States Coast Guard (USCG). **NUMBER OF EMPLOYEES COVERED BY THE USCG**, requires that you identify the number of employees in each employee category.

SECTION C – DRUG TESTING INFORMATION requires information for drug testing, refusal for testing, and training. The first table requests information on the **NUMBER OF SPECIMENS COLLECTED AND VERIFIED NEGATIVE** in each category for testing. All numbers entered into the pre-employment category section of the table should be separated into the category of employment for which the person was applying or transferring. The other categories are for employee testing and require information for employees in **covered positions** only. Each part of this table must be completed for each category of testing. These categories include: (1) random, (2) post-accident, (3) reasonable suspicion, (4) return to duty, and (5) follow-up testing. **"COLL"** requires the number of specimens collected in each employee category for each category of testing. **"NEG"** requires a count for all completed tests by employee category that were verified negative by your Medical Review Officer (MRO). Do not include results of quality control (QC) samples submitted to the testing laboratory in any of the categories. Each column in the table should be added and the answer entered in the row marked **"TOTAL"**.

Following the table that summarizes **DRUG TESTING INFORMATION**, you must provide a count of **employees returned to duty during this reporting period who had a verified positive drug test or refused a drug test required under the FTA rule**. This information should be available from the personnel office and/or drug program manager.

EMPLOYEES WHO REFUSED TO SUBMIT TO A DRUG TEST requires a count of the **NUMBER OF COVERED EMPLOYEES** who refused to submit to a **random** or **non-random** (pre-employment, post-accident, reasonable suspicion, return to duty, or follow-up) drug test required under the FTA regulation.

DRUG TRAINING/EDUCATION DURING CURRENT REPORTING PERIOD requires information on the number of covered employees and supervisory personnel who have received drug training during the current reporting period.

SECTION D – FTA FUNDING SOURCES asks for the sources of FTA funds for your organization. Simply place a check mark by each applicable funding section(s).

For FTA Use Only

FTA DRUG TESTING MIS "EZ" DATA COLLECTION FORMOMB No. 2132-0556

YEAR COVERED BY THIS REPORT: 20 _____

A. EMPLOYER INFORMATION

Company Name _____

Address _____

_____

Contact _____

Phone _____

Consortium Used (if applicable)

Name _____

Address _____

_____

Contact _____

Phone _____

I, the undersigned, certify that the information provided on the attached Federal Transit Administration Drug Testing Management Information System "EZ" Data Collection Form is, to the best of my knowledge and belief, true, correct, and complete for the period stated.

_____ _____
Signature Date of Signature

_____
Title

Title 18, U.S.C. Section 1001, makes it a criminal offense subject to a maximum fine of $10,000, or imprisonment for not more than 5 years, or both, to knowingly and willfully make or cause to be made any false or fraudulent statements or representations in any matter within the jurisdiction of any agency of the United States.

The Federal Transit Administration estimates that the average burden for this report form is 8 hours. You may submit any comments concerning the accuracy of this burden estimate or any suggestions for reducing the burden to: Office of Safety and Security (TPM-30), Federal Transit Administration; 400 7th St., S.W.; Washington, D.C. 20590; OR Office of Management and Budget, Paperwork Reduction Project (2132-0556); Washington, D.C. 20503.

B. COVERED EMPLOYEES

COVERED EMPLOYEES		
EMPLOYEE CATEGORY	NUMBER FTA COVERED EMPLOYEES	NUMBER OF EMPLOYEES COVERED BY THE USCG
Revenue Vehicle Operation		
Revenue Vehicle and Equipment Maintenance		
Revenue Vehicle Control/Dispatch		
CDL/Non-Revenue Vehicle		
Armed Security Personnel		
Total		

C. DRUG TESTING INFORMATION

NUMBER OF SPECIMENS COLLECTED AND VERIFIED NEGATIVE												
EMPLOYEE CATEGORY	PRE-EMPLOYMENT		RANDOM		POST-ACCIDENT		REASONABLE SUSPICISION		RETURN TO DUTY		FOLLOW-UP	
	COLL	NEG	COLL	NEG	COLL	NEG	COLL	NEG	COLL	NEG	COLL	NEG
Revenue Vehicle Operations												
Revenue Vehicle and Equipment Maintenance												
Revenue Vehicle Control/Dispatch												
CDL/Non-Revenue Vehicle												
Armed Security Personnel												
Total												

Number of employees returned to duty during this reporting period who had a verified positive drug test or refused a drug test required under the FTA rule:	
EMPLOYEES WHO REFUSED TO SUBMIT TO A DRUG TEST	**Number**
Covered employees who refused to submit to a random drug test required under the FTA regulation:	
Covered employees who refused to submit to a non-random drug test required under the FTA regulation:	
DRUG TRAINING/EDUCATION DURING CURRENT REPORTING PERIOD	Number
Covered employees who have received at least 60 minutes of initial training on the consequences, manifestations, and behavioral cues of drug use as required by the FTA drug testing regulation:	
Supervisory personnel who have received 60 minutes of initial training on the specific contemporaneous physical, behavioral, and performance indicators of probable drug use as required by the FTA drug testing regulation:	

D. FTA FUNDING SOURCES

FTA FUNDING SOURCES				
Check all sections that apply:	5307	5309	5310	5311

APPENDIX C TO PART 655—ALCOHOL TESTING MANAGEMENT INFORMATION SYSTEM (MIS) DATA COLLECTION FORM

INSTRUCTIONS

The following instructions are to be used as a guide for completing the alcohol testing information in the Federal Transit Administration (FTA) **Alcohol Testing MIS Data Collection Form**. These instructions outline and explain the information requested and indicate the probable sources for this information. A sample testing results table with a narrative explanation is provided on pages iii-iv as an example to facilitate the process of completing the form correctly.

This reporting form includes six sections. Collectively, these sections address the data elements required in the FTA and the U.S. Department of Transportation (DOT) alcohol testing regulations. The six sections, the page number for the instructions, and the page location on the reporting form are:

Section	Instructions Page	Reporting Form Page
A. EMPLOYER INFORMATION	i	1
B. COVERED EMPLOYEES	i	2
C. ALCOHOL TESTING INFORMATION	ii-iv	3-4
D. OTHER ALCOHOL TESTING/PROGRAM INFORMATION	v	5
E. ALCOHOL TRAINING/EDUCATION	v	5
F. FTA FUNDING SOURCES	v	5

Page 1 **EMPLOYER INFORMATION** (Section A) requires the year covered by this report, the agency name for which the report is done, a current address, a person's name and phone number to contact if there are any questions about the report. Below this, information must be entered for the consortium used (if applicable). Finally, a signature, title and date are required certifying the correctness and completeness of the form. Note: A separate report must be submitted by each FTA recipient for each of its contract service and contract maintenance providers covered by the FTA alcohol testing regulation.

Page 2 **COVERED EMPLOYEES** (Section B) requires a count for each employee category that must be tested under the FTA alcohol testing regulation. The employee categories are: Revenue Service Vehicle Operation, Revenue Service Vehicle and Equipment Maintenance, Revenue Service Vehicle Control/Dispatch, Commercial Driver License (CDL) Holders who operate Non-Revenue Service Vehicles, and Security Personnel who carry Firearms. The most likely source for this information is the employer's personnel department. These counts should be based on the recipient's or contractor's records for the reported year. The **TOTAL** is a count of **all** covered employees for **all** categories combined, i.e., the sum of the columns.

Page 3

ALCOHOL TESTING INFORMATION (Section C) requires information for alcohol testing by category of testing. All numbers entered into the pre-employment category section of the table should be separated into the category of employment for which the person was applying or transferring. The other categories are for employee testing and require information for employees in **covered positions** only. Each part of this table must be completed for each category of testing. These categories include: (1) random, (2) post-accident, (3) reasonable suspicion, (4) return to duty, and (5) follow-up testing. These numbers **do not** include refusals for testing. A sample section of the table with example numbers is presented on page iv.

Four types of information are necessary to complete this table. The first blank column with the heading "**NUMBER OF SCREENING TESTS**," requires a count for all screening tests conducted for each employee category. The second blank column with the heading "**NUMBER OF CONFIRMATION TESTS**," requires a count for all confirmation alcohol tests performed for each employee category.

The third blank column with the heading "**NUMBER OF CONFIRMATION TEST RESULTS EQUAL TO 0.02, BUT LESS THAN 0.04,"** requires a count for each employee category of completed alcohol tests that resulted in an alcohol concentration equal to or greater than 0.02, but less than 0.04.

The fourth blank column with the heading **"NUMBER OF CONFIRMATION TEST RESULTS EQUAL TO OR GREATER THAN 0.04,"** requires a count for each employee category of completed alcohol tests that resulted in an alcohol concentration equal to or greater than 0.04. **Note: For return to duty testing, a confirmation result equal to or greater than 0.02 is a violation of the alcohol rule. Therefore, if the number of results equal to or greater than 0.04 is unknown, you may report all results in the third column of the table.**

Each column in the table should be added and the answer entered in the row marked **"TOTAL".**

A sample table is provided on page iv with example numbers.

Page 3

Below the part of the table containing pre-employment testing information are three boxes. This information should be available from the safety program manager or the alcohol program manager.

1) **"Number of persons denied a position as a covered employee following a pre-employment alcohol test indicating an alcohol concentration of 0.04 or greater".** This is a count of those persons who were not placed in a covered position because they took a breath test that resulted in an alcohol concentration of 0.04 or higher.

2) **"Number of accidents, as defined by the FTA alcohol testing regulation, which resulted in a post-accident alcohol testing indicating an alcohol concentration of 0.04 or greater".** This is a count of fatal and non-fatal accidents which resulted in post-accident breath alcohol tests indicating a concentration of 0.04 or greater for any employees involved in the accident.

3) **"Number of fatalities resulting from accidents which resulted in a post-accident alcohol test indicating an alcohol concentration of 0.04 or greater".** This is a count of fatalities in accidents which resulted in post-accident alcohol tests indicating a concentration of 0.04 or greater for any employees involved in the fatal accidents.

Page 4 Following the table that summarizes **ALCOHOL TESTING INFORMATION**, you must provide the **number of employees who engaged in alcohol misuse who were returned to duty in a covered position during this reporting period (having complied with the recommendations of a substance abuse professional as described in FTA regulations)**. This information should be available from the personnel office and/or alcohol program manager.

SAMPLE APPLICANT TEST RESULTS TABLE

The following example is for Section C, **ALCOHOL TESTING INFORMATION**, which summarizes pre-employment testing results. The procedures detailed here also apply to the other categories of testing in Section C which require you to summarize testing results for employees. This example uses the categories "Revenue Vehicle Operation" and "Armed Security Personnel" to illustrate the procedures for completing the form.

A Screening tests were performed on 157 job applicants for revenue vehicle operator positions during the reporting year. This information is entered in the first blank column of the table in the row marked "Revenue Vehicle Operation".

B Confirmation tests were necessary for 6 of the 157 applicants for revenue vehicle operator positions. Enter this information in the second blank column of the table in the row marked "Revenue Vehicle Operation". The confirmation test results for these 6 applicants were the following:

Applicant	Confirmation Result
#1	0.06
#2	0.01
#3	0.11
#4	0.04
#5	0.03
#6	0.02

C The confirmation test results for 2 of the applicants for revenue vehicle operator positions were equal to or greater than 0.02, but less than 0.04. Enter this information in the fourth blank column of the table in the row marked "Revenue Vehicle Operation".

D The confirmation test results for 3 of the applicants for revenue vehicle operator positions were equal to or greater than 0.04. Enter this information in the third blank column of the table in the row marked "Revenue Vehicle Operation".

E The last row, marked "TOTAL", requires you to add the numbers in each of the columns. With this example, 157 applicants for revenue vehicle operator positions and 107 applicants for armed security personnel positions were subjected to screening tests. The total for that column would be 264 (i.e., 157 + 107). The same procedure should be used for each column. (i.e., add all the numbers in that column and place the answer in the last row).

Please note that our sample data collection form also has information for armed security personnel on line two. The same procedures outlined for revenue vehicle operators should be followed for entering the data on armed security personnel. With applicants for armed security personnel positions, 107 screening tests conducted resulting in 3 confirmation tests. No confirmation results were equal to or greater than 0.02, but less than 0.04; and the confirmation test result for 1 of the armed security personnel applicants was equal to or greater than 0.04. This information is entered in the row marked "Armed Security Personnel".

PRE-EMPLOYMENT				
EMPLOYEE CATEGORY	NUMBER OF SCREENING TESTS	NUMBER OF CONFIRMATION TESTS	NUMBER OF CONFIRMATION TEST RESULTS EQUAL TO OR GREATER THAN 0.02, BUT LESS THAN 0.04	NUMBER OF CONFIRMATION TEST RESULTS EQUAL TO OR GREATER THAN 0.04
REVENUE VEHICLE OPERATION	157	6	2	3
ARMED SECURITY PERSONNEL	107	3	8	1
TOTAL	264	5	2	4
	A	B	C	D E

Note that adding up the numbers for confirmation results in columns three and four will not always match the number entered in the second column, **"NUMBER OF CONFIRMATION TESTS"**. These numbers may differ since some confirmation test results may be less than 0.02.

Remember that the same procedures indicated above are to be used for completing all of the categories for testing in Section C.

Page 5 **OTHER ALCOHOL TESTING/PROGRAM INFORMATION** (Section D) requires information on employees tested for drugs and alcohol at the same time and that you complete a table dealing with violations of other alcohol provisions/prohibitions of the regulation and a table dealing with employees who refused to submit to an alcohol test.

Page 5 **Number of employees administered drug and alcohol tests at the same time resulting in a verified positive drug test and an alcohol test indicating an alcohol concentration of 0.04 or greater,** requires that a count of all such employees be entered in the indicated box.

Page 5 **VIOLATIONS OF OTHER ALCOHOL PROVISIONS/PROHIBITIONS OF THIS REGULATION** requires supplying the number of covered employees who used alcohol prior to performing a safety-sensitive function, while performing a safety-sensitive function, and before taking a required post-accident alcohol test. The action taken with covered employees who violate any of these FTA alcohol regulation provisions is also to be supplied. Other violations not delineated in this table may also be provided.

Page 5 **EMPLOYEE WHO REFUSED TO SUBMIT TO AN ALCOHOL TEST** requires information the **NUMBER OF COVERED EMPLOYEES** who refused to submit to a **random** or **non-random** (pre-employment, post-accident, reasonable suspicion, return to duty, or follow-up) alcohol test required under the FTA regulation.

Page 5 **ALCOHOL TRAINING/EDUCATION** (Section E) requires information on the number of supervisory personnel who have received alcohol training during the current reporting period.

Page 5 **FTA FUNDING SOURCES** (Section F) asks for the sources of FTA funds for your organization. Simply place a check mark by each applicable funding section.

For FTA Use Only

FTA ALCOHOL TESTING MIS DATA COLLECTION FORM **OMB No. 2132-0557**

YEAR COVERED BY THIS REPORT: 20 _____

A. EMPLOYER INFORMATION

Name _____

Address _____

_____

Contact _____

Phone _____

Consortium Used (if applicable)

Name _____

Address _____

_____

Contact _____

Phone _____

I, the undersigned, certify that the information provided on this Federal Transit Administration Alcohol Testing Management Information System Data Collection Form is, to the best of my knowledge and belief, true, correct, and complete for the period stated.

_____ Signature

_____ Date of Signature

_____ Title

Title 18, U.S.C. Section 1001, makes it a criminal offense subject to a maximum fine of $10,000, or imprisonment for not more than 5 years, or both, to knowingly and willfully make or cause to be made any false or fraudulent statements or representations in any matter within the jurisdiction of any agency of the United States.

The Federal Transit Administration estimates that the average burden for this report form is 8 hours. You may submit any comments concerning the accuracy of this burden estimate or any suggestions for reducing the burden to: Office of Safety and Security (TPM-30), Federal Transit Administration; 400 7th St., S.W.; Washington, D.C. 20590; OR Office of Management and Budget, Paperwork Reduction Project (2132-0557); Washington, D.C. 20503.

B. COVERED EMPLOYEES

COVERED EMPLOYEES	
EMPLOYEE CATEGORY	NUMBER OF FTA COVERED EMPLOYEES
Revenue Vehicle Operation	
Revenue Vehicle and Equipment Maintenance	
Revenue Vehicle Control/Dispatch	
CDL/Non-Revenue Vehicle	
Armed Security Personnel	
Total	

READ BEFORE COMPLETING THE REMAINDER OF THIS FORM:

1. All items refer to the **current** reporting period **only** (for example, January 1, 1994 – December 31, 1994).

2. This report is only for testing **REQUIRED BY THE FEDERAL TRANSIT ADMINISTRATION (FTA) AND THE U.S. DEPARTMENT OF TRANSPORTATION (DOT):**

   - Results should be reported only for employees in **COVERED POSITIONS** as defined by the FTA alcohol testing regulation.

   - The information requested should only include testing for alcohol using the standard procedures required by DOT regulation 49 CFR Part 40.

3. Information on refusals for testing should only be reported in Section D ["OTHER ALCOHOL TESTING INFORMATION"]. Do not include refusals for testing in other sections of this report.

5. Complete all items; DO NOT LEAVE ANY ITEM BLANK. If the value for an item is zero (0), place a zero (0) on the form.

C. ALCOHOL TESTING INFORMATION

EMPLOYEE CATEGORY	NUMBER OF SCREENING TESTS	NUMBER OF CONFIRMATION TESTS	NUMBER OF CONFIRMATION TEST RESULTS EQUAL TO OR GREATER THAN 0.02, BUT LESS THAN 0.04	NUMBER OF CONFIRMATION TEST RESULTS EQUAL TO OR GREATER THAN 0.04
PRE-EMPLOYMENT				
Revenue Vehicle Operations				
Revenue Vehicle and Equipment Maintenance				
Revenue Vehicle Control/Dispatch				
CDL/Non-Revenue Vehicle				
Armed Security Personnel				
Total				
RANDOM				
Revenue Vehicle Operation				
Revenue Vehicle and Equipment Maintenance				
Revenue Vehicle Control/Dispatch				
CDL/Non-Revenue Vehicle				
Armed Security Personnel				
Total				
POST-ACCIDENT				
Revenue Vehicle Operation				
Revenue Vehicle and Equipment Maintenance				
Revenue Vehicle Control/Dispatch				
CDL/Non-Revenue Vehicle				
Armed Security Personnel				
Total				

Number of persons denied a position as a covered employee following a pre-employment alcohol test indicating an alcohol concentration of 0.04 or greater.		
Number of accidents, as defined by the FTA alcohol testing regulation, which resulted in a post-accident alcohol test indicating an alcohol concentration of 0.04 or greater:	FATAL	NON-FATAL
Number of fatalities resulting from accidents which resulted in a post-accident alcohol test indicating an alcohol concentration of 0.04 or greater.		

C. ALCOHOL TESTING INFORMATION (cont.)

EMPLOYEE CATEGORY	NUMBER OF SCREENING TESTS	NUMBER OF CONFIRMATION TESTS	NUMBER OF CONFIRMATION TEST RESULTS EQUAL TO OR GREATER THAN 0.02, BUT LESS THAN 0.04	NUMBER OF CONFIRMATION TEST RESULTS EQUAL TO OR GREATER THAN 0.04
REASONABLE SUSPICION				
Revenue Vehicle Operation				
Revenue Vehicle and Equipment Maintenance				
Revenue Vehicle Control/Dispatch				
CDL/Non-Revenue Vehicle				
Armed Security Personnel				
Total				
RETURN TO DUTY				
Revenue Vehicle Operation				
Revenue Vehicle and Equipment Maintenance				
Revenue Vehicle Control/Dispatch				
CDL/Non-Revenue Vehicle				
Armed Security Personnel				
Total				
FOLLOW-UP				
Revenue Vehicle Operations				
Revenue Vehicle and Equipment Maintenance				
Revenue Vehicle Control/Dispatch				
CDL/Non-Revenue Vehicle				
Armed Security Personnel				
Total				

Number of employees who engaged in alcohol misuse who were returned to duty in a covered position during this reporting period (having complied with the recommendations of a substance abuse professional as described in FTA regulations):	

D. OTHER ALCOHOL TESTING/PROGRAM INFORMATION

Number of employees administered drug and alcohol tests at the same time resulting in a verified positive drug test and an alcohol test indicating an alcohol concentration of 0.04 or greater:	

VIOLATIONS OF OTHER ALCOHOL PROVISIONS/PROHIBITIONS OF THIS REGULATION		
NUMBER OF COVERED EMPLOYEES	VIOLATION	ACTION TAKEN
	Covered employee used alcohol while performing safety-sensitive function.	
	Covered employee used alcohol within 4 hours of performing safety-sensitive function.	
	Covered employee used alcohol before taking a required post-accident alcohol test.	

EMPLOYEES WHO REFUSED TO SUBMIT TO AN ALCOHOL TEST	Number
Covered employees who refused to submit to a random alcohol test required under the FTA regulation:	
Covered employees who refused to submit to a non-random alcohol test required under the FTA regulation:	

E. ALCOHOL TRAINING/EDUCATION

TRAINING DURING CURRENT REPORTING PERIOD	Number
Supervisory personnel who have received 60 minutes of initial training on the specific contemporaneous physical, behavioral, and performance indicators of probable alcohol use as required by FTA alcohol testing regulations:	

E. FTA FUNDING SOURCES

FTA FUNDING SOURCES				
Check all sections that apply:	5307	5309	5310	5311

APPENDIX D TO PART 655—ALCOHOL TESTING MANAGEMENT INFORMATION SYSTEM (MIS) ''EZ'' DATA COLLECTION FORM

The following instructions are to be used as a guide for completing the Federal Transit Administration (FTA) **Alcohol Testing MIS "EZ" Data Collection Form**. This form should only be used if there is **no alcohol misuse** to be reported by your company. These instructions outline and explain the information requested and indicate the probable sources for this information. This reporting form includes four sections. These sections address the data elements required in the FTA and the U.S. Department of Transportation (DOT) alcohol testing regulations.

SECTION A – EMPLOYER INFORMATION requires the year covered by this report, the agency name for which the report is done, a current address, and a person's name and phone number to contact if there are any questions about the report. Below this, information must be entered for the consortium used (if applicable). Finally, a signature, title, and date are required certifying the correctness and completeness of the form. Note: A separate report must be submitted by each FTA recipient for each of its contract service and contract maintenance providers covered by the FTA drug testing regulation.

SECTION B – COVERED EMPLOYEES requires a count for each employee category that must be tested under the FTA alcohol testing regulation. The employee categories are: Revenue Service Vehicle Operation, Revenue Service Vehicle and Equipment Maintenance, Revenue Service Vehicle Control/Dispatch, Commercial Driver License (CDL) Holders who operate Non-Revenue Service Vehicles, and Security Personnel who carry Firearms. The most likely source for this information is the employer's personnel department. These counts should be based on the recipient's or contractor's records for the reported year. The TOTAL is a count of **all** covered employees for **all** categories combined, i.e., the sum of the columns.

SECTION C – ALCOHOL TESTING INFORMATION requires information for alcohol testing, refusal for testing, and training/education. The first table requests information on the **NUMBER OF ALCOHOL SCREENING TESTS CONDUCTED** in each category for testing. All numbers entered into the pre-employment category section of the table should be separated into the category of employment for which the person was applying or transferring. The other categories are for employee testing and require information for employees in **covered positions** only. Enter the number of alcohol screening tests conducted by employee category for each category of testing. Testing categories include: (1) random, (2) post-accident, (3) reasonable suspicion, (4) return to duty, and (5) follow-up testing. Each column in the table should be added and the answer entered in the row marked **"TOTAL"**.

Following the table that summarizes **ALCOHOL TESTING INFORMATION**, you must provide a count of **employees who engaged in alcohol misuse who were returned to duty in a covered position (having complied with the recommendations of a substance abuse professional as described in the FTA regulation)**. This information should be available from the personnel office and/or alcohol program manager.

EMPLOYEES WHO REFUSED TO SUBMIT TO AN ALCOHOL TEST requires a count of the **NUMBER OF COVERED EMPLOYEES** who refused to submit to a **random** or **non-random** (pre-employment, post-accident, reasonable suspicion, return to duty, or follow-up) alcohol test required under the FTA regulation.

ALCOHOL TRAINING/EDUCATION DURING CURRENT REPORTING PERIOD requires information on the number of supervisory personnel who have received alcohol training during the current reporting period.

SECTION D – FTA FUNDING SOURCES asks for the sources of FTA funds for your organization. Simply place a check mark by each applicable funding section.

For FTA Use Only

FTA ALCOHOL TESTING MIS "EZ" DATA COLLECTION FORM OMB No. 2132-0557
(No Alcohol Misuse)

YEAR COVERED BY THIS REPORT: 20 _____

A. EMPLOYER INFORMATION

Company Name _____

Address _____

_____

Contact _____

Phone _____

Consortium Used (if applicable)

Name _____

Address _____

_____

Contact _____

Phone _____

I, the undersigned, certify that the information provided on the attached Federal Transit Administration Alcohol Testing Management Information System "EZ" Data Collection Form is, to the best of my knowledge and belief, true, correct, and complete for the period stated.

_____ Signature

_____ Date of Signature

_____ Title

Title 18, U.S.C. Section 1001, makes it a criminal offense subject to a maximum fine of $10,000, or imprisonment for not more than 5 years, or both, to knowingly and willfully make or cause to be made any false or fraudulent statements or representations in any matter within the jurisdiction of any agency of the United States.

The Federal Transit Administration estimates that the average burden for this report form is 8 hours. You may submit any comments concerning the accuracy of this burden estimate or any suggestions for reducing the burden to: Office of Safety and Security (TPM-30), Federal Transit Administration; 400 7th St., S.W.; Washington, D.C. 20590; OR Office of Management and Budget, Paperwork Reduction Project (2132-0557); Washington, D.C. 20503.

B. COVERED EMPLOYEES

COVERED EMPLOYEES	
EMPLOYEE CATEGORY	NUMBER FTA COVERED EMPLOYEES
Revenue Vehicle Operation	
Revenue Vehicle and Equipment Maintenance	
Revenue Vehicle Control/Dispatch	
CDL/Non-Revenue Vehicle	
Armed Security Personnel	
Total	

C. ALCOHOL TESTING INFORMATION

NUMBER OF ALCOHOL SCREENING TESTS CONDUCTED						
EMPLOYEE CATEGORY	PRE-EMPLOYMENT	RANDOM	POST-ACCIDENT	REASONABLE SUSPICION	RETURN TO DUTY	FOLLOW-UP
Revenue Vehicle Operation						
Revenue Vehicle and Equipment Maintenance						
Revenue Vehicle Control/Dispatch						
CDL/Non-Revenue Vehicle						
Armed Security Personnel						
Total						
Number of employees who engaged in alcohol misuse who were returned to duty in a covered position (having complied with the recommendations of a substance abuse professional as described in the FTA regulation):						

EMPLOYEES WHO REFUSED TO SUBMIT TO AN ALCOHOL TEST	Number
Covered employees who refused to submit to a random alcohol test required under the FTA regulation:	
Covered employees who refused to submit to a non-random alcohol test required under the FTA regulation:	
ALCOHOL TRAINING/EDUCATION DURING CURRENT REPORTING PERIOD	Number
Supervisory personnel who have received 60 minutes of initial training on the specific contemporaneous physical, behavioral, and performance indicators of probable alcohol use as required by FTA alcohol testing regulations:	

D. FTA FUNDING SOURCES

FTA FUNDING SOURCES				
Check all sections that apply:	5307	5309	5310	5311

PART 659—RAIL FIXED GUIDEWAY SYSTEMS; STATE SAFETY OVERSIGHT

Subpart A—General Provisions

Sec.
659.1 Purpose.
659.3 Scope.
659.5 Definitions.
659.7 Withholding of funds for non-compliance.

Subpart B—The Role of the State

659.21 Designation of oversight agency.
659.23 Confidential investigation reports.

Subpart C—The Oversight Agency's Role

659.31 The system safety program standard.
659.33 System safety program plans.
659.35 Transit agency annual audit reports.
659.37 Safety reviews.
659.39 Transit agency report on accidents and unacceptable hazardous conditions.
659.41 Investigations.
659.43 Corrective actions.
659.45 Oversight agency report to the Federal Transit Administration.
659.47 Use of contractors.
659.49 Certification of compliance.
APPENDIX TO PART 659—SAMPLE CERTIFICATION OF COMPLIANCE.

AUTHORITY: 49 U.S.C. § 5330.

SOURCE: 60 FR 67046, Dec. 27, 1995, unless otherwise noted.

Subpart A—General Provisions

§ 659.1 Purpose.

This part implements 49 U.S.C. 5330 by requiring a State to oversee the safety of rail fixed guideway systems through a designated oversight agency.

§ 659.3 Scope.

This part applies to a State that has within its boundaries a rail fixed guideway system not regulated by the Federal Railroad Administration (FRA).

§ 659.5 Definitions.

As used in this part—

Accident means any event involving the revenue service operation of a rail fixed guideway system if as a result:

(1) An individual dies;

(2) An individual suffers bodily injury and immediately receives medical treatment away from the scene of the accident; or

(3) A collision, derailment, or fire causes property damage in excess of $100,000.

APTA Guidelines means the American Public Transit Association's ''Manual for the Development of Rail Transit System Safety Program Plans,'' published on August 20, 1991.

Contractor means an entity that performs tasks required by this part on behalf of the oversight or transit agency. The transit agency may not be a contractor for the oversight agency.

FTA means the Federal Transit Administration, an agency within the U.S. Department of Transportation.

Hazardous condition means a condition that may endanger human life or property. It includes unacceptable hazardous conditions.

Investigation means a process to determine the probable cause of an accident or an unacceptable hazardous condition; it may involve no more than a review and approval of the transit agency's determination of the probable cause of an accident or unacceptable hazardous condition.

Oversight agency means the entity, other than the transit agency, designated by the State or several States to implement this part.

Rail fixed guideway system means any light, heavy, or rapid rail system, monorail, inclined plane, funicular, trolley, or automated guideway that is:

(1) Included in FTA's calculation of fixed guideway route miles or receives funding under FTA's formula program for urbanized areas (49 U.S.C. 5336); and

(2) Not regulated by the Federal Railroad Administration.

Safety means freedom from danger.

Safety review means a formal, comprehensive, on-site examination by the oversight agency of a transit agency's safety practices to determine whether they comply with the policies and procedures required under the transit agency's system safety program plan.

Security means freedom from intentional danger.

System safety program plan means a document adopted by the transit agency detailing its safety policies, objectives, responsibilities, and procedures.

System safety program standard means the standard developed and adopted by the State oversight agency which, at a minimum, complies with the APTA Guidelines and which addresses personal security.

Transit agency means an entity operating a rail fixed guideway system.

Unacceptable hazardous condition means a hazardous condition determined to be an unacceptable hazardous condition using the APTA Guidelines' Hazard Resolution Matrix (APTA Guidelines, checklist number 7).

§ 659.7 Withholding of funds for noncompliance.

The Administrator of the FTA may withhold up to five percent of the amount required to be apportioned for use in any State or affected urbanized area in such State under FTA's formula program for urbanized areas for any fiscal year beginning after September 30, 1997, if the State in the previous fiscal year has not met the requirements of this part and the Administrator determines that the State is not making adequate efforts to comply with this part.

Subpart B—The Role of the State

§ 659.21 Designation of oversight agency.

(a) For a transit agency or agencies operating within a single State, the State must designate an agency of the State, other than a transit agency, to serve as the oversight agency and to implement the requirements of this part.

(b) For a transit agency operating a system within more than one State, those States may designate a single entity, other than the transit agency, to implement the requirements of this part.

§ 659.23 Confidential investigation reports.

The State may prohibit an investigation report that may be prepared by the oversight agency from being admitted into evidence or used in a civil action for damages resulting from a matter mentioned in the report.

Subpart C—The Oversight Agency's Role

§ 659.31 The system safety program standard.

(a) The oversight agency must develop and adopt a system safety program standard that, at a minimum—

(1) Complies with the American Public Transit Association's ''Manual for the Development of Rail Transit System Safety Program Plans'' (APTA Guidelines) published on August 20, 1991, hereby incorporated by reference; and

(2) Requires the transit agency to address the personal security of its passengers and employees.

(b) The APTA Guidelines specify procedures for developing a system safety program plan, generally discuss the principles of system safety, and specifically address certain issues critical to the safe operation of a rail fixed guideway system.

(c) The incorporation by reference of the APTA Guidelines has been approved by the Director of the Federal Register in accordance with 5 U.S.C. 552(a) and 1 CFR Part 51. Copies of the APTA Guidelines may be obtained from the American Public Transit Association, 1201 New York Avenue, NW., Washington DC 20005–3917, (202) 893–4000. The Guidelines may be inspected at, and are available from the Federal Transit Administration, Office of Safety and Security, 400 7th Street, SW., Washington, D.C. 20590, and at the Office of the Federal Register, 800 North Capitol Street, NW., Washington, DC.

§ 659.33 System safety program plans.

(a) Except as provided in § 659.33(b), the oversight agency must —

(1) Require the transit agency to implement, beginning on January 1, 1997, a system safety program plan conforming to the oversight agency's system safety program standard; and

(2) Approve in writing before January 1, 1997, the transit agency's system safety program plan.

(b) The oversight agency must —

(1) Require the transit agency to implement beginning on January 1, 1998, the security portion of its system safety program plan; and

(2) Approve in writing before January 1, 1998, the security portions of the transit agency's system safety program plan.

(c) After December 31, 1996, the oversight agency must review and approve, in writing, the transit agency's system safety program plan, as necessary, and require the transit agency to update its system safety program plan, as necessary.

(d) The oversight agency may prohibit a transit agency from publicly disclosing the security aspects of the system safety program plan.

[60 FR 67046, Dec. 27, 1995, as amended at 61 FR 67493, Dec. 23, 1996]

§ 659.35 Transit agency annual audit reports.

The oversight agency must—

(a) Require that the transit agency submit, annually, a copy of the annual safety audit report prepared by the transit agency as a result of the Internal Safety Audit Process (APTA Guidelines, checklist number 9); and

(b) Review the annual safety audit reports prepared by the transit agency.

§ 659.37 Safety reviews.

At least every three years the oversight agency must conduct an on-site

safety review of the transit agency's implementation of its system safety program plan and prepare and issue a report containing findings and recommendations resulting from that review, which, at a minimum, must include an analysis of the efficacy of the system safety program plan and a determination of whether it should be updated.

§ 659.39 Transit agency report on accidents and unacceptable hazardous conditions.

The oversight agency must require that the transit agency report accidents and unacceptable hazardous conditions to the oversight agency within a specified period of time.

§ 659.41 Investigations.

The oversight agency must—

(a) Establish procedures to investigate accidents and unacceptable hazardous conditions.

(b) Unless the National Transportation Safety Board has investigated or will investigate an accident, the oversight agency must investigate accidents and unacceptable hazardous conditions occurring at a transit agency under its jurisdiction.

§ 659.43 Corrective actions.

The oversight agency must require the transit agency to minimize, control, correct, or eliminate any investigated hazardous condition within a time period specified by and in accordance with a corrective action plan approved by the oversight agency.

§ 659.45 Oversight agency report to the Federal Transit Administration.

(a) *Initial submissions*. Before January 1, 1997, the oversight agency must submit to FTA the following information, which must be updated as necessary:

(1) The name and address of the oversight agency;

(2) The name(s) and address(es) of the transit agency or agencies subject to the oversight agency's jurisdiction under this part; and

(3) A written description of the oversight agency's oversight program including the following information:

(i) A copy of its system safety program standard;

(ii) Its procedures or process for reviewing and approving the transit agency's system safety program plan;

(iii) Its investigatory procedures; and

(iv) Its procedures for ensuring that appropriate corrective actions have been taken by the transit agency to correct, eliminate, minimize, or control investigated hazardous conditions.

(b) *Annual submissions*. Before March 15 of each year, the oversight agency must submit to FTA a publicly available annual report summarizing its oversight activities for the preceding twelve months, including a description of the most common probable causal factors of accidents and unacceptable hazardous conditions.

(c) *Periodic submissions*. Status reports of accidents, hazardous conditions, and corrective action plans must be forwarded to the FTA upon request.

(d) *Addresses*. Reports and annual summaries must be sent to: Federal Transit Administration, Office of Safety and Security, 400 7th Street, S.W., Washington, DC 20590.

[60 FR 67046, Dec. 27, 1995, as amended at 61 FR 67493, Dec. 23, 1996]

§ 659.47 Use of contractors.

(a) The oversight agency may use a contractor to—

(1) Develop a system safety program standard;

(2) Review system safety program plans;

(3) Review annual audit reports;

(4) Conduct safety reviews;

(5) Prepare safety review findings;

(6) Establish investigation procedures;

(7) Conduct investigations;

(8) Review corrective action plans; and/or

(9) Prepare initial or annual submissions to FTA.

(b) The oversight agency may allow a transit agency to use a contractor to—

(1) Develop or update a system safety program plan;

(2) Prepare annual audit reports; and/or

(3) Develop a corrective action plan.

§ 659.49 Certification of compliance.

(a) Before January 1, 1997, and annually thereafter, the oversight agency must certify to the FTA that it has

complied with the requirements of this part. Each certification shall comply with the applicable sample certification provided in the appendix to this part. Each certification shall be sent to: Federal Transit Administration, Office of Safety and Security, 400 7th Street, S.W., Washington, DC 20590.

(b) Each certification must be signed by an official authorized by the oversight agency and must comply with the applicable sample certification provided in the appendix to this part.

APPENDIX TO PART 659—SAMPLE CERTIFICATION OF COMPLIANCE

This appendix contains an example of certification language.

I, (name), (title), certify that (name of the oversight agency) has implemented a State oversight program that meets the requirements of 49 CFR part 659 and further certify that I have no conflict of interest with any rail fixed guideway system overseen as a result of 49 CFR part 659, nor does (name of the oversight agency) and its contractors.

PART 661—BUY AMERICA REQUIREMENTS—SURFACE TRANSPORTATION ASSISTANCE ACT OF 1982, AS AMENDED

Sec.
661.1 Applicability.
661.3 Definitions.
661.5 General requirements.
661.6 Certification requirement for procurement of steel or manufactured products.
661.7 Waivers.
661.9 Application for waivers.
661.11 Rolling stock procurements.
661.12 Certification requirement for procurement of buses, other rolling stock and associated equipment.
661.13 Grantee responsibility.
661.15 Investigation procedures.
661.17 Failure to comply with certification.
661.18 Intentional violations.
661.19 Sanctions.
661.20 Rights of third parties.
661.21 State Buy America provisions.

AUTHORITY: 49 U.S.C. 5323(j) (formerly sec. 165, Pub. L. 97–424; as amended by sec. 337, Pub. L. 100–17 and sec. 1048, Pub. L. 102–240); 49 CFR 1.51.

SOURCE: 56 FR 932, Jan. 9, 1991, unless otherwise noted.

§ 661.1 Applicability.

Unless otherwise noted, this part applies to all federally assisted procurements using funds authorized by the Federal Mass Transit Act of 1964, as amended; 23 U.S.C. 103(e)(4); and section 14 of the National Capital Transportation Act of 1969, as amended.

§ 661.3 Definitions.

As used in this part:

Act means the Surface Transportation Assistance Act of 1982 (Pub. L. 97–424), as amended by section 337 of the Surface Transportation and Uniform Relocation Assistance of 1987 (Pub. L. 100–17).

Administrator means the Administrator of FTA, or designee.

Component means any article, material, or supply, whether manufactured or unmanufactured, that is directly incorporated into the end product at the final assembly location.

Grantee means any entity that is a recipient of FTA funds.

Manufacutured product means an item produced as a result of manufacturing process.

Manufacturing process means the application of processes to alter the form or function of materials or of elements of the product in a manner adding value and transforming those materials or elements so that they represent a new end product functionally different from that which would result from mere assembly of the elements or materials.

Rolling stock means transit vehicles such as buses, vans, cars, railcars, locomotives, trolley cars and buses, and ferry boats, as well as vehicles used for support services.

STURAA means the Surface Transportation and Uniform Relocation Assistance Act of 1987 (Pub. L. No. 100–17).

FTA means the Federal Transit Administration.

United States means the several States, the Commonwealth of Puerto Rico, the District of Columbia, Guam, American Samoa, the Virgin Islands, and the Commonwealth of the Northern Mariana Islands.

[56 FR 932, Jan. 9, 1991, as amended at 61 FR 6302, Feb. 16, 1996]

§ 661.5 General requirements.

(a) Except as provided in § 661.7 and § 661.11 of this part, no funds may be obligated by FTA for a grantee project

unless all iron, steel, and manufactured products used in the project are produced in the United States.

(b) All steel and iron manufacturing processes must take place in the United States, except metallurgical processes involving refinement of steel additives.

(c) The steel and iron requirements apply to all construction materials made primarily of steel or iron and used in infrastructure projects such as transit or maintenance facilities, rail lines, and bridges. These items include, but are not limited to, structural steel or iron, steel or iron beams and columns, running rail and contact rail. These requirements do not apply to steel or iron used as components or subcomponents of other manufactured products or rolling stock.

(d) For a manufactured product to be considered produced in the United States:

(1) All of the manufacturing processes for the product must take place in the United States; and

(2) All of the components of the product must be of U.S. origin. A component is considered of U.S. origin if it is manufactured in the United States, regardless of the origin of its subcomponents.

[61 FR 6302, Feb. 16, 1996]

§ 661.6 Certification requirement for procurement of steel or manufactured products.

If steel or manufactured products (as defined in §§ 661.3 and 661.5 of this part) are being procured, the appropriate certificate as set forth below shall be completed and submitted by each bidder in accordance with the requirement contained in § 661.13(b) of this part.

Certificate of Compliance With Section 165(a)

The bidder hereby certifies that it will comply with the requirements of section 165(a) of the Surface Transportation Assistance Act of 1982, as amended, and the applicable regulations in 49 CFR part 661.

Date _____
Signature _____
Company Name _____
Title _____

Certificate for Non-Compliance With Section 165(a)

The bidder hereby certifies that it cannot comply with the requirements of section 165(a) of the Surface Transportation Assistance Act of 1982, as amended, but it may qualify for an exception to the requirement pursuant to section 165 (b)(2) or (b)(4) of the Surface Transportation Assistance Act of 1982 and regulations in 49 CFR 661.7.

Date _____
Signature _____
Company Name _____
Title _____

§ 661.7 Waivers.

(a) Section 165(b) of the Act provides that the general requirements of section 165(a) shall not apply in four specific instances. This section sets out the conditions for the three statutory waivers based on public interest, non-availability, and price-differential. Section 661.11 of this part sets out the conditions for the fourth statutory waiver governing the procurement of rolling stock and associated equipment.

(b) Under the provision of section 165(b)(1) of the Act, the Administrator may waive the general requirements of section 165(a) if the Administrator finds that their application would be inconsistent with the public interest. In determining whether the conditions exist to grant this public interest waiver, the Administrator will consider all appropriate factors on a case-by-case basis, unless a general exception is specifically set out in this part.

(c) Under the provision of section 165(b)(2) of the Act, the Administrator may waive the general requirements of section 165(a) if the Administrator finds that the materials for which a waiver is requested are not produced in the United States in sufficient and reasonably available quantities and of a satisfactory quality.

(1) It will be presumed that the conditions exist to grant this non-availability waiver if no responsive and responsible bid is received offering an item produced in the United States.

(2) In the case of a sole source procurement, the Administrator will grant this non-availability waiver only if the grantee provides sufficient information which indicates that the item to be procured is only available from a single

source or that the item to be procured is not produced in sufficient and reasonably available quantities of a satisfactory quality in the United States.

(d) Under the provision of section 165(b)(4) of the Act, the Administrator may waive the general requirements of section 165(a) if the Administrator finds that the inclusion of a domestic item or domestic material will increase the cost of the contract between the grantee and its supplier of that item or material by more than 25 percent. The Administrator will grant this price-differential waiver if the amount of the lowest responsive and responsible bid offering the item or material that is not produced in the United States multiplied by 1.25 is less than the amount of the lowest responsive and responsible bid offering the item or material produced in the United States.

(e) The four statutory waivers of section 165(b) of the Act as set out in this part shall be treated as being separate and distinct from each other.

(f) The waivers described in paragraphs (b) and (c) of this section may be granted for a component or subcomponent in the case of the procurement of the items governed by section 165(b)(3) of the Act (requirements for rolling stock). If a waiver is granted for a component or a subcomponent, that component or subcomponent will be considered to be of domestic origin for the purposes of § 661.11 of this part.

(g) The waivers described in paragraphs (b) and (c) of this section may be granted for a specific item or material that is used in the production of a manufactured product that is governed by the requirements of § 661.5(d) of this part. If such a waiver is granted to such a specific item or material, that item or material will be treated as being of domestic origin.

(h) The provisions of this section shall not apply to products produced in a foreign country if the Secretary, in consultation with the United States Trade Representative, determines that:

(1) That foreign country is party to an agreement with the United States pursuant to which the head of an agency of the United States has waived the requirements of this section; and

(2) That foreign country has violated the terms of the agreement by discriminating against products covered by this section that are produced in the United States and are covered by the agreement.

APPENDIX A TO § 661.7—GENERAL WAIVERS

(a) All waivers published in 48 CFR 25.108 which establish excepted articles, materials, and supplies for the Buy American Act of 1933 (41 U.S.C. 10a–d), as the waivers may be amended from time to time, apply to this part under the provisions of § 661.7 (b) and (c).

(b) Under the provisions of § 661.7(b) of this part, 15 passenger vans produced by Chrysler Corporation are exempt from the requirement that final assembly of the vans take place in the United States (49 FR 13944, April 9, 1984).

(c) Under the provisions of § 661.7(b) of this part, 15 Passenger Wagons produced by Chrysler Corporation are exempt from the requirement that final assembly of the wagons take place in the United States (letter to Chrysler Corporation dated May 13, 1987.)

(d) Under the provisions of § 661.7 (b) and (c) of this part, microcomputer equipment, including software, of foreign origin can be procured by grantees (50 FR 18760, May 2, 1985 and 51 FR 36126, October 8, 1986).

(e) Under the provisions of § 661.7(b) of this part, a general public interest waiver from the Buy America requirements for ''small purchases'' (as defined in the ''common grant rule,'' at 49 CFR 18.36(d)) made by FTA grantees with capital, planning, or operating assistance.

[56 FR 932, Jan. 9, 1991, as amended at 60 FR 37928, July 24, 1995, 61 FR 6302, Feb. 16, 1996]

§ 661.9 Application for waivers.

(a) This section sets out the application procedures for obtaining all waivers, except those general exceptions set forth in this part for which individual applications are unnecessary and those covered by section 165(b)(3) of the Act. The procedures for obtaining an exception covered by section 165(b)(3) are set forth in § 661.11 of this part.

(b) A bidder who seeks to establish grounds for an exception must seek the exception, in a timely manner, through the grantee.

(c) Except as provided in paragraph (d) of this section, only a grantee may request a waiver. The request must be in writing, include facts and justification to support the waiver, and be submitted to the Administrator through the appropriate Regional Office.

(d) FTA will consider a request for a waiver from a potential bidder or supplier only if the waiver is being sought under § 661.7 (f) or (g) of this part.

(e) The Administrator will issue a written determination setting forth the reasons for granting or denying the exception request. Each request for an exception, and FTA's action on the request, are available for public inspection under the provisions of 49 CFR part 601, subpart C.

§ 661.11 Rolling stock procurements.

(a) The provisions of § 661.5 do not apply to the procurement of buses and other rolling stock (including train control, communication, and traction power equipment), if the cost of components produced in the United States is more than 60 percent of the cost of all components and final assembly takes place in the United States.

(b) The domestic content requirements in paragraph (a) of this section also apply to the domestic content requirements for components set forth in paragraphs (i), (j), and (l) of this section.

(c) A component is any article, material, or supply, whether manufactured or unmanufactured, that is directly incorporated into an end product at the final assembly location.

(d) A component may be manufactured at the final assembly location if the manufacturing process to produce the component is an activity separate and distinct from the final assembly of the end product.

(e) A component is considered to be manufactured if there are sufficient activities taking place to advance the value or improve the condition of the subcomponents of that component; that is, if the subcomponents have been substantially transformed or merged into a new and functionally different article.

(f) Except as provided in paragraph (k) of this section, a subcomponent is any article, material, or supply, whether manufactured or unmanufactured, that is one step removed from a component (as defined in paragraph (c) of this section) in the manufacturing process and that is incorporated directly into a component.

(g) For a component to be of domestic origin, more that 60 percent of the subcomponents of that component, by cost, must be of domestic origin, and the manufacture of the component must take place in the United States. If, under the terms of this part, a component is determined to be of domestic origin, its entire cost may be used in calculating the cost of domestic content of an end product.

(h) A subcomponent is of domestic origin if it is manufactured in the United States.

(i) If a subcomponent manufactured in the United States is exported for inclusion in a component that is manufactured outside the United States and it receives tariff exemptions under the procedures set forth in 19 CFR 10.11 through 10.24, the subcomponent retains its domestic identity and can be included in the calculation of the domestic content of an end product even if such a subcomponent represents less than 60 percent of the cost of a particular component.

(j) If a subcomponent manufactured in the United States is exported for inclusion in a component manufactured outside the United States and it does not receive tariff exemption under the procedures set forth in 19 CFR 10.11 through 10.24, the subcomponent loses its domestic identity and cannot be included in the calculation of the domestic content of an end product.

(k) Raw materials produced in the United States and then exported for incorporation into a component are not considered to be a subcomponent for the purpose of calculating domestic content. The value of such raw materials is to be included in the cost of the foreign component.

(l) If a component is manufactured in the United States, but contains less than 60 percent domestic subcomponents, by cost, the cost of the domestic subcomponents and the cost of manufacturing the component may be included in the calculation of the domestic content of the end product.

(m) For purposes of this section, except as provided in paragraph (o) of this section:

(1) The cost of a component or a subcomponent is the price that a bidder or offeror must pay to a subcontractor or

supplier for that component or subcomponent. Transportation costs to the final assembly location must be included in calculating the cost of foreign components and subcomponents.

(2) If a component or subcomponent is manufactured by the bidder or offeror, the cost of the component is the cost of labor and materials incorporated into the component or subcomponent, an allowance for profit, and the administrative and overhead costs attributable to that component or subcomponent under normal accounting principles.

(n) The cost of a component of foreign origin is set using the foreign exchange rate at the time the bidder or offeror executes the appropriate Buy America certificate.

(o) The cost of a subcomponent that retains its domestic identity consistent with paragraph (j) of this section shall be the cost of the subcomponent when last purchased, f.o.b. United States port of exportation or point of border crossing as set out in the invoice and entry papers or, if no purchase was made, the value of the subcomponent at the time of its shipment for exportation, f.o.b. United States port of exportation or point of border crossing as set out in the invoice and entry papers.

(p) In accordance with 49 U.S.C. 5323(j), labor costs involved in final assembly shall not be included in calculating component costs.

(q) The actual cost, not the bid price, of a component is to be considered in calculating domestic content.

(r) Final assembly is the creation of the end product from individual elements brought together for that purpose through application of manufacturing processes. If a system is being procured as the end product by the grantee, the installation of the system qualifies as final assembly.

(s) An end product means any item subject to 49 U.S.C. 5323(j) that is to be acquired by a grantee, as specified in the overall project contract.

(t) Train control equipment includes, but is not limited to, the following equipment:

(1) Mimic board in central control
(2) Dispatcher's console
(3) Local control panels
(4) Station (way side) block control relay cabinets
(5) Terminal dispatcher machines
(6) Cable/cable trays
(7) Switch machines
(8) Way side signals
(9) Impedance bonds
(10) Relay rack bungalows
(11) Central computer control
(12) Brake equipment
(13) Brake systems

(u) Communication equipment includes, but is not limited to, the following equipment:

(1) Radios
(2) Space station transmitter and receivers
(3) Vehicular and hand-held radios
(4) PABX telephone switching equipment
(5) PABX telephone instruments
(6) Public address amplifiers
(7) Public address speakers
(8) Cable transmission system cable
(9) Cable transmission system multiplex equipment
(10) Communication console at central control
(11) Uninterruptible power supply inverters/rectifiers
(12) Uninterruptible power supply batteries
(13) Data transmission system central processors
(14) Data transmission system remote terminals
(15) Line printers for data transmission system
(16) Communication system monitor test panel
(17) Security console at central control

(v) Traction power equipment includes, but is not limited to the following:

(1) Primary AC switch gear
(2) Primary AC transformer rectifiers
(3) DC switch gear
(4) Traction power console and CRT display system at central control
(5) Bus ducts with buses (AC and DC)
(6) Batteries
(7) Traction power rectifier assemblies
(8) Distribution panels (AC and DC)
(9) Facility step-down transformers
(10) Motor control centers (facility use only)
(11) Battery chargers
(12) Supervisory control panel
(13) Annunciator panels

(14) Low voltage facility distribution switch board
(15) DC connect switches
(16) Negative bus boxes
(17) Power rail insulators
(18) Power cables (AC and DC)
(19) Cable trays
(20) Instrumentation for traction power equipment
(21) Connectors, tensioners, and insulators for overhead power wire systems
(22) Negative drainage boards
(23) Inverters
(24) Traction motors
(25) Propulsion gear boxes
(26) Third rail pick-up equipment
(27) Pantographs

(w) The power or third rail is not considered traction power equipment and is thus subject to the requirements of 49 U.S.C. 5323(j) and the requirements of § 661.5.

(x) A bidder on a contract for an item covered by 49 U.S.C. 5323(j) who will comply with section 165(b)(3) and regulations in this section is not required to follow the application for waiver procedures set out in § 661.9. In lieu of these procedures, the bidder must submit the appropriate certificate required by § 661.12.

APPENDIX A TO § 661.11—GENERAL WAIVERS

(a) The provisions of § 661.11 of this part do not apply when foreign sourced spare parts for buses and other rolling stock (including train control, communication, and traction power equipment) whose total cost is 10 percent or less of the overall project contract cost are being procured as part of the same contract for the major capital item.

(b) [Reserved]

APPENDIX B TO § 661.11—TYPICAL COMPONENTS OF BUSES

The following is a list of items that typically would be considered components of a bus. This list is not all-inclusive.

Engines, transmissions, front axle assemblies, rear axle assemblies, drive shaft assemblies, front suspension assemblies, rear suspension assemblies, air compressor and pneumatic systems, generator/alternator and electrical systems, steering system assemblies, front and rear air brake assemblies, air conditioning compressor assemblies, air conditioning evaporator/condenser assemblies, heating systems. passenger seats, driver's seat assemblies, window assemblies, entrance and exit door assemblies, door control systems, destination sign assemblies, interior lighting assemblies, front and rear end cap assemblies, front and rear bumper assemblies, specialty steel (structural steel tubing, etc.) aluminum extrusions, aluminum, steel or fiberglass exterior panels, and interior trim, flooring, and floor coverings.

APPENDIX C TO § 661.11—TYPICAL COMPONENTS OF RAIL ROLLING STOCK

The following is a list of items that typically would be considered components of rail rolling stock. This list is not all inclusive.

Car shells, main transformer, pantographs, traction motors, propulsion gear boxes, interior linings, acceleration and braking resistors, propulsion controls, low voltage auxiliary power supplies, air conditioning equipment, air brake compressors, brake controls, foundation brake equipment, articulation assemblies, train control systems, window assemblies, communication equipment, lighting, seating, doors, door actuators, and controls, couplers and draft gear, trucks, journal bearings, axles, diagnostic equipment, and third rail pick-up equipment.

[61 FR 6302, Feb. 16, 1996, as amended at 62 FR 40954, July 31, 1997]

§ 661.12 Certification requirement for procurement of buses, other rolling stock and associated equipment.

If buses or other rolling stock (including train control, communication, and traction power equipment) are being procured, the appropriate certificate as set forth below shall be completed and submitted by each bidder in accordance with the requirement contained in § 661.13(b) of this part.

Certificate of Compliance With Section 165(b)(3)

The bidder hereby certifies that it will comply with the requirements of section 165(b)(3), of the Surface Transportation Assistance Act of 1982, as amended, and the regulations of 49 CFR 661.11.

Date _____
Signature _____
Company Name _____
Title _____

Certificate for Non-Compliance with Section 165(b)(3)

The bidder hereby certifies that it cannot comply with the requirements of section 165(b)(3) of the Surface Transportation Assistance Act of 1982, as amended, but may qualify for an exception to the requirement consistent with section 165(b)(2) or (b)(4) of the Surface Transportation Assistance Act, as amended, and regulations in 49 CFR 661.7.

Date _____

Signature _____
Company Name _____
Title _____

§ 661.13 Grantee responsibility.

(a) The grantee shall adhere to the Buy America clause set forth in its grant contract with FTA.

(b) The grantee shall include in its bid specification for procurement within the scope of these regulations an appropriate notice of the Buy America provision. Such specifications shall require, as a condition of responsiveness, that the bidder or offeror submit with the bid a completed Buy America certificate in accordance with § 661.6 or § 661.12 of this part, as appropriate.

(c) Whether or not a bidder or offeror certifies that it will comply with the applicable requirement, such bidder or offerer is bound by its original certification and is not permitted to change its certification after bid opening. A bidder or offeror that certifies that it will comply with the applicable Buy America requirements is not eligible for a waiver of those requirements.

§ 661.15 Investigation procedures.

(a) It is presumed that a bidder who has submitted the required Buy America certificate is complying with the Buy America provision. A false certification is a criminal act in violation of 18 U.S.C. 1001.

(b) Any party may petition FTA to investigate the compliance of a successful bidder with the bidder's certification. That party (''the petitioner'') must include in the petition a statement of the grounds of the petition and any supporting documentation. If FTA determines that the information presented in the petition indicates that the presumption in paragraph (a) of this section has been overcome, FTA will initiate an investigation.

(c) In appropriate circumstances, FTA may determine on its own to initiate an investigation without receiving a petition from a third party.

(d) When FTA determines under paragraph (b) or (c) of this section to conduct an investigation, it requests that the grantee require the successful bidder to document its compliance with its Buy America certificate. The successful bidder has the burden of proof to establish that it is in compliance. Documentation of compliance is based on the specific circumstances of each investigation, and FTA will specify the documentation required in each case.

(e) The grantee shall reply to the request under paragraph (d) of this section within 15 working days of the request. The investigated party may correspond directly with FTA during the course of investigation, if it informs the grantee that it intends to do so, and if the grantee agrees to such action in writing. The grantee must inform FTA, in writing, that the investigated party will respond directly to FTA. An investigated party may provide confidential or proprietary information (see paragraph (l) of this section) directly to FTA while providing other information required to be submitted as part of the investigation through the grantee.

(f) Any additional information requested or required by FTA must be submitted within 5 working days after the receipt of such request unless specifically exempted by FTA.

(g) The grantee's reply (or that of the bidder) will be transmitted to the petitioner. The petitioner may submit comments on the reply to FTA within 10 working days after receipt of the reply. The grantee and the low bidder will be furnished with a copy of the petitioner's comments, and their comments must be received by FTA within 5 working days after receipt of the petitioner's comments.

(h) The failure of a party to comply with the time limits stated in this section may result in resolution of the investigation without consideration of untimely filed comments.

(i) During the course of an investigation, with appropriate notification to affected parties, FTA may conduct site visits of manufacturing facilities and final assembly locations as it considers appropriate.

(j) FTA will, upon request, make available to any interested party information bearing on the substance of the investigation which has been submitted by the petitioner, interested parties or grantees, except to the extent that withholding of information is permitted or required by law or regulation.

(k) If a party submitting information considers that the information submitted contains proprietary material which should be withheld, a statement advising FTA of this fact may be included, and the alleged proprietary information must be identified wherever it appears. Any comments on the information provided shall be submitted within a maximum of ten days.

(l) For purposes of paragraph (j) of this section, confidential or proprietary material is any material or data whose disclosure could reasonably be expected to cause substantial competitive harm to the party claiming that the material is confidential or proprietary.

(m) When a petition for investigation has been filed before award, the grantee will not make an award before the resolution of the investigation, unless the grantee determines that:

(1) The items to be procured are urgently required;

(2) Delivery of performance will be unduly delayed by failure to make the award promptly; or

(3) Failure to make prompt award will otherwise cause undue harm to the grantee or the Federal Government.

(n) In the event that the grantee determines that the award is to be made during the pendency of an investigation, the grantee will notify FTA before to making such award. FTA reserves the right not to participate in the funding of any contract awarded during the pendency of an investigation.

(o) Initial decisions by FTA will be in written form. Reconsideration of an initial decision of FTA may be requested by any party involved in an investigation. FTA will only reconsider a decision only if the party requesting reconsideration submits new matters of fact or points of law that were not known or available to the party during the investigation. A request for reconsideration of a decision of FTA shall be filed not later than ten (10) working days after the initial written decision. A request for reconsideration will be subject to the procedures in this section consistent with the need for prompt resolution of the matter.

§ 661.17 Failure to comply with certification.

If a successful bidder fails to demonstrate that it is in compliance with its certification, it will be required to take the necessary steps in order to achieve compliance. If a bidder takes these necessary steps, it will not be allowed to change its original bid price. If a bidder does not take the necessary steps, it will not be awarded the contract if the contract has not yet been awarded, and it is in breach of contract if a contract has been awarded.

§ 661.18 Intentional violations.

A person shall be ineligible to receive any contract or subcontract made with funds authorized under the Intermodal Surface Transportation Efficiency Act of 1991 pursuant to part 29 of this title if it has been determined by a court or Federal agency that the person intentionally—

(a) Affixed a label bearing a ''Made in America'' inscription, or an inscription with the same meaning, to a product not made in the United States, but sold in or shipped to the United States and used in projects to which this section applies, or

(b) Otherwise represented that any such product was produced in the United States.

[61 FR 6303, Feb. 16, 1996]

§ 661.19 Sanctions.

A willful refusal to comply with a certification by a successful bidder may lead to the initiation of debarment or suspension proceedings under part 29 of this title.

§ 661.20 Rights of third parties.

The sole right of any third party under the Buy America provision is to petition FTA under the provisions of § 661.15 of this part. No third party has any additional right, at law or equity, for any remedy including, but not limited to, injunctions, damages, or cancellation of the Federal grant or contracts of the grantee.

§ 661.21 State Buy America provisions.

(a) Except as provided in paragraph (b) of this section, any State may impose more stringent Buy America or

buy national requirements than contained in section 165 of the Act and the regulations in this part.

(b) FTA will not participate in contracts governed by the following:

(1) State Buy America or Buy National preference provisions which are not as strict as the Federal requirements.

(2) State and local Buy National or Buy America preference provisions which are not explicitly set out under State law. For example, administrative interpretations of non-specific State legislation will not control.

(3) State and local Buy Local preference provisions.

PART 663—PRE-AWARD AND POST-DELIVERY AUDITS OF ROLLING STOCK PURCHASES

Subpart A—General

Sec.
663.1 Purpose.
663.3 Scope.
663.5 Definitions.
663.7 Certification of compliance to FTA.
663.9 Audit limitations.
663.11 Audit financing.
663.13 Buy America requirements.
663.15 Compliance.

Subpart B—Pre-Award Audits

663.21 Pre-award audit requirements.
663.23 Description of pre-award audit.
663.25 Pre-award Buy America certification.
663.27 Pre-award purchaser's requirements certification.

Subpart C—Post-Delivery Audits

663.31 Post-delivery audit requirements.
663.33 Description of post-delivery audit.
663.35 Post-delivery Buy America certification.
663.37 Post-delivery purchaser's requirements certification.
663.39 Post-delivery audit review.

Subpart D—Certification of Compliance With or Inapplicability of Federal Motor Vehicle Safety Standards

663.41 Certification of compliance with Federal motor vehicle safety standards.
663.43 Certification that Federal motor vehicle standards do not apply.

AUTHORITY: 49 U.S.C. 1608(j); 23 U.S.C. 103(e)(4); Pub. L. 96–184, 93 Stat. 1320; Pub. L. 101–551, 104 Stat. 2733; 49 CFR 1.51.

SOURCE: 56 FR 48395, Sept. 24, 1991, unless otherwise noted.

Subpart A—General

§ 663.1 Purpose.

This part implements section 12(j) of the Federal Mass Transit Act of 1964, as amended, which was added by section 319 of the 1987 Surface Transportation and Uniform Relocation Assistance Act (Pub. L. 100–17). Section 12(j) requires the Federal Transit Administration, by delegation from the Secretary of Transportation, to issue regulations requiring pre-award and post-delivery audits when a recipient of Federal financial assistance purchases rolling stock with funds made available under the Federal Mass Transit Act, as amended.

§ 663.3 Scope.

This part applies to a recipient purchasing rolling stock to carry passengers in revenue service with funds made available under sections 3, 9, 18, and 16(b)(2) of the Federal Mass Transit Act, as amended; 23 U.S.C. 103(e)(4); and section 14 of the National Capital Transportation Act of 1969, as amended.

§ 663.5 Definitions.

As used in this part—

(a) *Pre-award* means that period in the procurement process before the recipient enters into a formal contract with the supplier.

(b) *Post-delivery* means the time period in the procurement process from when the rolling stock is delivered to the recipient until title to the rolling stock is transferred to the recipient or the rolling stock is put into revenue service, whichever is first.

(c) *Recipient* means a recipient of Federal financial assistance from FTA.

(d) *Revenue service* means operation of rolling stock for transportation of fare-paying passengers as anticipated by the recipient.

(e) *Rolling stock* means buses, vans, cars, railcars, locomotives, trolley cars and buses, ferry boats, and vehicles used for guideways and incline planes.

(f) *Audit* means a review resulting in a report containing the necessary certifications of compliance with Buy

America standards, purchaser's requirements specifications, and, where appropriate, a manufacturer's certification of compliance with or inapplicability of the Federal Motor Vehicle Safety Standards, required by section 319 of STURAA and this part.

(g) *FTA* means the Federal Transit Administration.

§ 663.7 Certification of compliance to FTA.

A recipient purchasing revenue service rolling stock with funds obligated by FTA on or after October 24, 1991, must certify to FTA that it will conduct or cause to be conducted pre-award and post-delivery audits as prescribed in this part. In addition, such a recipient must maintain on file the certifications required under subparts B, C, and D of this part.

§ 663.9 Audit limitations.

(a) An audit under this part is limited to verifying compliance with

(1) Applicable Buy America requirements [section 165 of the Surface Transportation Assistance Act of 1982, as amended,]; and

(2) Solicitation specification requirements of the recipient.

(b) An audit under this part includes, where appropriate, a copy of a manufacturer's self certification information that the vehicle complies with Federal Motor Vehicle Safety Standards or a certification that such standards are inapplicable.

(c) An audit conducted under this part is separate from the single annual audit requirement established by Office of Management and Budget Circular A–128, ''Audits of State and Local Governments,'' dated May 16, 1985.

§ 663.11 Audit financing.

A recipient purchasing revenue rolling stock with FTA funds may charge the cost of activities required by this part to the grant which FTA made for such purchase.

§ 663.13 Buy America requirements.

A Buy America certification under this part shall be issued in addition to any certification which may be required by part 661 of this title. Nothing in this part precludes FTA from conducting a Buy America investigation under part 661 of this title.

§ 663.15 Compliance.

A recipient subject to this part shall comply with all applicable requirements of this part. Such compliance is a condition of receiving Federal financial assistance from FTA. A recipient determined not to be in compliance with this part will be subject to the immediate suspension, withholding, or repayment of Federal financial assistance from FTA or other appropriate actions unless and until it comes into compliance with this part.

Subpart B—Pre-Award Audits

§ 663.21 Pre-award audit requirements.

A recipient purchasing revenue service rolling stock with FTA funds must ensure that a pre-award audit under this part is complete before the recipient enters into a formal contract for the purchase of such rolling stock.

§ 663.23 Description of pre-award audit.

A pre-award audit under this part includes—

(a) A Buy America certification as described in § 663.25 of this part;

(b) A purchaser's requirements certification as described in § 663.27 of this part; and

(c) Where appropriate, a manufacturer's Federal Motor Vehicle Safety certification information as described in § 663.41 or § 663.43 of this part.

§ 663.25 Pre-award Buy America certification.

For purposes of this part, a pre-award Buy America certification is a certification that the recipient keeps on file that—

(a) There is a letter from FTA which grants a waiver to the rolling stock to be purchased from the Buy America requirements under section 165(b)(1), (b)(2), or (b)(4) of the Surface Transportation Assistance Act of 1982, as amended; or

(b) The recipient is satisfied that the rolling stock to be purchased meets the requirements of section 165(a) or (b)(3)

of the Surface Transportation Assistance Act of 1982, as amended, after having reviewed itself or through an audit prepared by someone other than the manufacturer or its agent documentation provided by the manufacturer which lists—

(1) Component and subcomponent parts of the rolling stock to be purchased identified by manufacturer of the parts, their country of origin and costs; and

(2) The location of the final assembly point for the rolling stock, including a description of the activities that will take place at the final assembly point and the cost of final assembly.

§ 663.27 Pre-award purchaser's requirements certification.

For purposes of this part, a pre-award purchaser's requirements certification is a certification a recipient keeps on file that—

(a) The rolling stock the recipient is contracting for is the same product described in the purchaser's solicitation specification; and

(b) The proposed manufacturer is a responsible manufacturer with the capability to produce a vehicle that meets the recipient's specification set forth in the recipient's solicitation.

Subpart C—Post-Delivery Audits

§ 663.31 Post-delivery audit requirements.

A recipient purchasing revenue service rolling stock with FTA funds must ensure that a post-delivery audit under this part is complete before title to the rolling stock is transferred to the recipient.

§ 663.33 Description of post-delivery audit.

A post-delivery audit under this part includes—

(a) A post-delivery Buy America certification as described in § 663.35 of this part;

(b) A post-delivery purchaser's requirements certification as described in § 663.37 of this part; and

(c) When appropriate, a manufacturer's Federal Motor Vehicle Safety Standard self-certification information as described in § 663.41 or § 663.43 of this part.

§ 663.35 Post-delivery Buy America certification.

For purposes of this part, a post-delivery Buy America certification is a certification that the recipient keeps on file that—

(a) There is a letter from FTA which grants a waiver to the rolling stock received from the Buy America requirements under sections 165 (b)(1), or (b)(4) of the Surface Transportation Assistance Act of 1982, as amended; or

(b) The recipient is satisfied that the rolling stock received meets the requirements of section 165 (a) or (b)(3) of the Surface Transportation Assistance Act of 1982, as amended, after having reviewed itself or by means of an audit prepared by someone other than the manufacturer or its agent documentation provided by the manufacturer which lists—

(1) Components and subcomponent parts of the rolling stock identified by manufacturer of the parts, their country of origin and costs; and

(2) The actual location of the final assembly point for the rolling stock including a description of the activities which took place at the final assembly point and the cost of the final assembly.

§ 663.37 Post-delivery purchaser's requirements certification.

For purposes of this part, a post-delivery purchaser's requirements certification is a certification that the recipient keeps on file that—

(a) Except for procurements covered under paragraph (c) in this section, a resident inspector (other than an agent or employee of the manufacturer) was at the manufacturing site throughout the period of manufacture of the rolling stock to be purchased and monitored and completed a report on the manufacture of such rolling stock. Such a report, at a minimum, shall—

(1) Provide accurate records of all vehicle construction activities; and

(2) Address how the construction and operation of the vehicles fulfills the contract specifications.

(b) After reviewing the report required under paragraph (a) of this section, and visually inspecting and road testing the delivered vehicles, the vehicles meet the contract specifications.

(c) For procurements of ten or fewer buses, or any number of primary manufacturer standard production and unmodified vans, after visually inspecting and road testing the vehicles, the vehicles meet the contract specifications.

§ 663.39 Post-delivery audit review.

(a) If a recipient cannot complete a post-delivery audit because the recipient or its agent cannot certify Buy America compliance or that the rolling stock meets the purchaser's requirements specified in the contract, the rolling stock may be rejected and final acceptance by the recipient will not be required. The recipient may exercise any legal rights it has under the contract or at law.

(b) This provision does not preclude the recipient and manufacturer from agreeing to a conditional acceptance of rolling stock pending manufacturer's correction of deviations within a reasonable period of time.

Subpart D—Certification of Compliance With or Inapplicability of Federal Motor Vehicle Safety Standards

§ 663.41 Certification of compliance with Federal motor vehicle safety standards.

If a vehicle purchased under this part is subject to the Federal Motor Vehicle Safety Standards issued by the National Highway Traffic Safety Administration in part 571 of this title, a recipient shall keep on file its certification that it received, both at the pre-award and post-delivery stage, a copy of the manufacturer's self-certification information that the vehicle complies with relevant Federal Motor Vehicle Safety Standards.

§ 663.43 Certification that Federal motor vehicle standards do not apply.

(a) Except for rolling stock subject to paragraph (b) of this section, if a vehicle purchased under this part is not subject to the Federal Motor Vehicle Safety Standards issued by the National Highway Traffic Safety Administration in part 571 of this title, the recipient shall keep on file its certification that it received a statement to that effect from the manufacturer.

(b) This subpart shall not apply to rolling stock that is not a motor vehicle.

PART 665—BUS TESTING

Subpart A—General

Sec.
665.1 Purpose.
665.3 Scope.
665.5 Definitions.
665.7 Grantee certification of compliance.

Subpart B—Bus Testing Procedures

665.11 Testing requirements.
665.13 Test report and manufacturer certification.

Subpart C—Operations

665.21 Scheduling.
665.23 Fees.
665.25 Transportation of vehicle.
665.27 Procedures during testing.

APPENDIX A TO PART 665—TESTS TO BE PERFORMED AT THE BUS TESTING FACILITY

AUTHORITY: Federal Transit Act of 1964, as amended, 49 U.S.C. 1601 *et seq.*, 1608(h); section 317, Surface Transportation and Uniform Relocation Assistance Act of 1987; and 49 CFR 1.51.

SOURCE: 57 FR 33397, July 28, 1992, unless otherwise noted.

Subpart A—General

§ 665.1 Purpose.

An applicant for Federal financial assistance under the Federal Transit Act for the purchase or lease of buses with funds obligated by the FTA after September 30, 1989, must certify to the FTA that any new bus model acquired with such assistance has been tested in accordance with this part. This part contains the information necessary for a recipient to ensure compliance with this provision.

§ 665.3 Scope.

(a) This part applies to a recipient of Federal financial assistance under sections 3, 9, 16(b)(2), or 18 of the FT Act,

and, except as provided in subsections (b), (c), and (d) is effective October 1, 1989;

(b) The provisions of section 665.11(e)(3) are effective November 8, 1990;

(c) The provisions in sections 665.11 (c), (d), and (f) concerning partial testing are effective August 27, 1992; and

(d) The provisions in §§ 665.11(e) (4) and (5) concerning the last two categories of buses which must be tested, apply as follows:

(1) For vehicles that are manufactured from modified mass-produced chassis or vans, or manufactured from non-mass-produced chassis or vans, testing and a final report will be required for all vehicles offered in response to advertisements for bids or requests for proposals issued on or after June 1, 1994.

(2) For vehicles manufactured from unmodified mass-produced chassis, testing and a final report will be required for all vehicles offered in response to advertisements for bids or requests for proposals issued on or after October 1, 1994.

[57 FR 33397, July 28, 1992, as amended at 58 FR 10990, Feb. 23, 1993; 58 FR 58733, Nov. 3, 1993]

§ 665.5 Definitions.

As used in this part—

Administrator means the Administrator of the Federal Transit Administration or designee.

Bus means a rubber-tired automotive vehicle used for the provision of mass transportation service by or for a recipient.

Bus model means a bus design or variation of a bus design usually designated by the manufacturer by a specific name and/or model number.

Bus testing facility means a testing facility established by renovation of a facility constructed with Federal assistance at Altoona, Pennsylvania, under section 317(b)(1) of the Surface Transportation and Uniform Relocation Assistance Act of 1987, and includes proving ground facilities operated in connection with the facility.

FT Act means the Federal Transit Act, as amended (49 U.S.C. app. 1601 *et seq.*).

Major change in chassis design means, for vehicles manufactured on a mass produced chassis, a change in frame structure, material or configuration, or a change in chassis suspension type.

Major change in components means:

(1) For those vehicles that are not manufactured on a mass produced chassis, a change in a vehicle's engine, axle, transmission, suspension, or steering components;

(2) For those that are manufactured on a mass produced chassis, a change in the vehicle's chassis from one major design to another.

Major change in configuration means a change which may have a significant impact on vehicle handling and stability, or structural integrity.

Mass produced van or chassis means a van or chassis that has or is projected to have an annual production rate of 20,000 or more units.

Mass transportation service means the operation of a vehicle which provides general or special service to the public on a regular and continuing basis.

Modified mass-produced chassis or van means a vehicle that is manufactured from an incomplete, partially assembled mass-produced chassis or van as provided by an OEM to a small bus manufacturer. This includes vehicles whose chassis structure has been modified to include: The addition of a tandem or tag axle; the installation of a drop or lowered floor; changes to the GVWR from the OEM rating; or other modifications that are *not* made in strict conformance with the OEM's modifications guidelines.

New bus model means a bus model which—

(1) Has not been used in mass transit service in the United States before October 1, 1988; or

(2) Has been used in such service but which after September 30, 1988, is being produced with a major change in configuration or components.

Non-mass-produced chassis or van means a vehicle that is manufactured from an incomplete, partially assembled chassis or van as provided by an OEM to a secondary small bus manufacturer, and where the annual production rate of the OEM chassis or van is less than 20,000 units.

Original Equipment Manufacturer (OEM) means the original manufacturer of a chassis or van supplied as a complete or incomplete vehicle to a small bus manufacturer.

Partial testing means the performance of those bus tests which may yield significantly different data from that obtained in previous bus testing conducted at the bus testing facility.

Recipient means an entity which receives funds under sections 3, 9, 16(b)(2), or 18 of the FT Act, either directly from FTA or through a State administering agency.

Small bus manufacturer means a secondary market assembler that acquires a chassis or van from an original equipment manufacturer for subsequent modification/assembly and sale as 5-year/150,000-mile and/or 4-year/100,000-mile minimum service life vehicles.

Test report means the final document prepared by the operator of the bus testing facility stating the results of the tests performed on each bus.

Unmodified mass-produced chassis means a vehicle that is manufactured from an incomplete, partially assembled mass-produced chassis as provided by an OEM to a small bus manufacturer. This includes vehicles whose chassis structure has either not been modified, or is modified in strict conformance with the OEM's modification guidelines. The addition of a tandem or tag axle would exclude a bus model from this definition.

Unmodified mass-produced van means a vehicle that is mass-produced, complete and fully assembled as provided by an OEM. This includes vans with raised roofs, and/or wheelchair lifts, or ramps that are installed by the OEM, or by a party other than the OEM provided that the installation of these components is completed in strict conformance with the OEM modification guidelines.

[57 FR 33397, July 28, 1992, as amended at 58 FR 58733, Nov. 3, 1993]

§ 665.7 Grantee certification of compliance.

(a) In each application to the FTA for the purchase or lease of buses, a recipient shall certify that any new bus model, or any bus model with a major change in configuration or components, to be acquired or leased with funds obligated by the FTA after September 30, 1989, will be tested at the bus testing facility, and a test report provided before final acceptance of the first vehicle by the recipient.

(b) It is the responsibility of the recipient in dealing with a manufacturer, to determine whether a vehicle to be acquired is subject to these procedures.

Subpart B—Bus Testing Procedures

§ 665.11 Testing requirements.

(a) A new bus model to be tested at the bus testing facility shall—

(1) Be a single model;

(2) Meet all applicable Federal Motor Vehicle Safety Standards, as defined by the National Highway Traffic Safety Administration in part 571 of this title;

(3) Be substantially fabricated and assembled by techniques and tooling that will be used in production of subsequent buses of that model.

(b) If the new bus model had not been previously tested at the bus testing facility, then the new bus model shall undergo the full tests requirements for maintainability, reliability, safety, performance, structural integrity, fuel economy, and noise;

(c) If the new bus model had not been previously tested at the bus testing facility and is being produced on a mass produced chassis that has been previously tested on another bus model at the bus testing facility, then the new bus model may undergo partial testing requirements;

(d) If the new bus model had been previously tested at the bus testing facility, then the new bus model may undergo partial testing requirements.

(e) The following vehicle types shall be tested:

(1) Minimum service life of 12 years or 500,000 miles—typified by heavy duty large buses, approximately 35–40 foot, as well as articulated buses.

(2) Minimum service life of ten years or 350,000 miles—typified by heavy duty small buses, approximately 30 foot.

(3) Minimum service life of seven years or 200,000 miles—typified by medium duty mid-size buses, approximately 25–35 foot.

(4) Minimum service life of five years or 150,000 miles—typified by light duty

mid-size buses, approximately 25–35 foot.

(5) Minimum service life of four years or 100,000 miles—typified by light duty small buses, cutaways, and modified vans, approximately 16–28 foot.

(f) Tests performed in a higher service life category (*i.e.*, longer service life) need not be repeated when the same bus model is used in lesser service life applications. However, the use of a bus model in a service life application higher than it has been tested for may make the bus subject to the bus testing requirements.

(g) The operator of the facility shall develop a test plan for the testing of vehicles at the facility, which generally follows the guidelines set forth in appendix A of this part.

§ 665.13 Test report and manufacturer certification.

(a) Upon completion of testing, the operator of the facility shall provide a test report to the entity that submitted the bus for testing.

(b)(1) A manufacturer of a new bus model or a bus produced with a major change in component or configuration shall provide a copy of the test report to a recipient during the point in the procurement process specified by the recipient.

(2) A manufacturer who releases a report under paragraph (b)(1) of this section also shall provide notice to the operator of the facility that the report is available to the public.

(c) If a bus model subject to a test report has a change that is not a major change under this part, the manufacturer shall advise the recipient during the procurement process and shall include description of the change and its basis for concluding that it is not a major change.

(d) A test report shall be available publicly once the owner of the report makes it available during the recipient's procurement process. The operator of the facility will have available for distribution copies of all the publicly available reports.

(e) The test report is the only information or documentation that will be made available publicly in connection with any bus model tested at the facility.

Subpart C—Operations

§ 665.21 Scheduling.

(a) A manufacturer may schedule a vehicle for testing by contacting Penn State's Transportation Institute (PSTI) at the following address: The Pennsylvania State University, Pennsylvania Transportation Institute, Research Building B, University Park, PA 16802, (814) 863–1889.

(b) Upon contacting PSTI, the manufacturer will be provided the following:

(1) A draft contract for the testing;

(2) A fee schedule; and

(3) The draft test procedures that will be conducted on the vehicle.

(c) PSTI will provide final test procedures to be conducted on the vehicle at the time of contract execution.

(d) PSTI will process vehicles for testing in the order in which the contracts are signed.

§ 665.23 Fees.

(a) Fees charged by the operator are according to a schedule approved by the FTA, which include different fees for partial testing.

(b) Fees will be prorated for a vehicle withdrawn from the facility before the completion of testing.

§ 665.25 Transportation of vehicle.

A manufacturer is responsible for transporting its vehicle to and from the facility at the beginning and completion of the testing.

§ 665.27 Procedures during testing.

(a) The facility operator shall perform all testing, consistent with established procedures at the facility and with the test procedures provided to the manufacturer at the time of contract execution.

(b) The manufacturer of a bus being tested may terminate the test program at any time before the completion of testing, and shall be charged a fee for the tests performed.

(c) The operator shall perform all maintenance and repairs on the test vehicle, consistent with manufacturers specifications, unless the operator determines that the nature of the maintenance or repair is best performed by the manufacturer under the operator's supervision.

(d) The manufacturer may observe all tests. The manufacturer may not provide maintenance or service unless requested to do so by the operator.

APPENDIX A TO PART 665—TESTS TO BE PERFORMED AT THE BUS TESTING FACILITY

The seven tests to be performed on each vehicle are required by STURAA and are based in part on tests described in the FTA report ''First Article Transit Bus Test Plan'', which is mentioned in the legislative history of section 317. When appropriate, SAE test procedures and other procedures accepted by the transit industry will be used. The seven tests are described in general terms in the following paragraphs.

1. Maintainability

The maintainability test includes bus servicing, preventive maintenance, inspection, and repair. It also will include the removal and reinstallation of the engine and drive train components that would be expected to require replacement during the bus' normal life cycle. Much of the maintainability data will be obtained during the bus durability test at the proving ground. Up to twenty-five percent of the bus life will be simulated and there will be servicing, preventive maintenance, and repair actions. These actions will be done by test facility staff, although manufacturers will be allowed to maintain a representative on site during the testing. Test facility staff may require a manufacturer to provide vehicle servicing or repair, under the supervision of the facility staff. Since the operator will not become familiar with the detailed design of all new bus models that are tested, tests to determine the time and skill required to remove and reinstall an engine, a transmission, or other major propulsion system components may require advice from the bus manufacturer. All routine and corrective maintenance will be carried out by the test operator in accordance with the manufacturer's specifications.

The maintainability test report will include the frequency, personnel hours, and replacement parts or supplies required for each action during the test. The accessibility of selected components and other observations that could be important to a bus user will be included in the report.

2. Reliability

The question of reliability will be addressed by recording all bus breakdowns during testing. It is recognized that with one test bus it is not feasible to conduct statistical reliability tests. It is anticipated that bus operation on the durability course should reveal the problems that would otherwise not be detected until much later during scheduled transit service. The bus failures, repair time, and the actions required to get the bus back into operation will be recorded in the report.

3. Safety

The safety test will consist of a handling and stability test. The handling and stability test is an obstacle avoidance or double-lane change test that will be performed at the proving ground. The double-lane change course will be different for each type of bus and the speed could be different for each type of bus. Coach speed will be held constant throughout a given test run. Individual test runs will be made at increasing speeds up to 45 mph or until the coach can no longer be operated safely over the course, whichever speed is lower. Both left-and-right-hand lane changes will be tested.

4. Performance

The performance test will be performed on the proving ground and will measure acceleration and gradeability with the test vehicle operated at seated load weight. Top speed also will be measured if it can be done safely on the track. The test will be performed using a fifth wheel or equivalent and associated instrumentation. The bus will be accelerated at full throttle from standstill to maximum safe speed on the track. The report will include a table of time required to accelerate to each 10 mph increment of speed and when possible, the top speed. The gradeability capabilities will be calculated both from the test data and a test from a dead stop on a minimum of a 15 percent grade.

5. Structural Integrity

Two different structural integrity tests will be performed. Structural strength and distortion tests will be performed at the testing facility in Altoona and structural durability tests will be performed at the proving ground.

a. Structural Strength and Distortion Tests

(1) The structural strength and distortion tests will be conducted and will be different for each type of bus. For example, a shakedown of the bus structure will be conducted by loading and unloading the bus no more than three times with a distributed load equal to 2.5 times gross load. The bus then will be loaded with a distributed load to gross vehicle weight. (Gross vehicle weight is a curb weight plus gross load.) Increase in floor deflection will be measured as the bus weight is increased from curb weight to gross vehicle weight. Then the bus will be loaded with a distributed load equal to 2.5 times gross load. The bus then will be unloaded and inspected for any permanent deformation on the floor or coach structure.

(2) The bus will be loaded to gross vehicle weight, with one wheel on top of a 6-inch-high curb and then in a 6-inch-deep pot hole. This test will be repeated for all four wheels. The test will verify: (a) Normal operation of the steering mechanism and (b) Operability of all passenger doors, passenger escape mechanisms, windows, and service doors. In addition, a water leak test will be conducted.

(3) Using a load-equalizing towing sling, a static tension load equal to 1.2 times the bus curb weight will be applied to the bus towing fixtures (front and rear). The load will be removed and the two eyes and adjoining structure will be inspected for damages or permanent deformations.

(4) The bus at curb weight will be towed with a heavy wrecker truck for several miles after which it will be inspected for structural damage or permanent deformation.

(5) With the bus at curb weight probable damages due to tire deflating and jacking will be tested.

(6) With the bus at curb weight possible damages or deformation associated with lifting the bus on a two post hoist system or supporting it on jack stands will be assessed.

b. Structural Durability

The structural durability test also will be different for each type of bus, but all tests will be performed on the durability course at the proving ground, simulating up to twenty-five percent of the vehicle's normal service life. During the test there will be inspections of the bus structure and the mileage and identification of possible structural anomalies.

6. Fuel Economy

This test will be run to determine the fuel economy in miles per gallon or equivalent of the new bus models. The test will be run at seated load weight on a duty cycle that simulates transit service for the type of vehicle being tested. The fuel measurement devices under consideration include volumetric, gravimetric, flow and pressure.

This fuel economy test bears no relation to the calculations done by the Environmental Protection Agency (EPA) to determine fuel economy levels for the Corporate Average Fuel Economy Program. However, the test will provide data which can be used by recipients in their purchase decisions.

7. Noise

There will be two noise tests: a. Interior noise and vibration; and b. Exterior noise. It is recognized that different levels of noise are expected and acceptable with different types of vehicles and different test procedures might be required.

CHAPTER VII—NATIONAL RAILROAD PASSENGER CORPORATION (AMTRAK)

Part		*Page*
700	Organization, functioning and available information	1153
701	Amtrak Freedom of Information Act program	1155

PART 700—ORGANIZATION, FUNCTIONING AND AVAILABLE INFORMATION

Sec.
700.1 Purpose.
700.2 Organization and functioning of Amtrak.
700.3 Availability of documents, assistance, and information.

AUTHORITY: 5 U.S.C. 552(a) (1), (2).

SOURCE: 49 FR 24378, June 13, 1984, unless otherwise noted.

§ 700.1 Purpose.

This part describes the organization and functioning of Amtrak and the availability to the public of documents and information concerning its policies, procedures and activities.

§ 700.2 Organization and functioning of Amtrak.

The creation of the National Railroad Passenger Corporation (''Amtrak'') was authorized by the Rail Passenger Service Act, as amended, 84 Stat. 1327, 45 U.S.C. 541 *et seq.* (''the Act''). The Act requires that Amtrak be operated and managed as a for-profit corporation, that it be incorporated under the District of Columbia Business Corporation Act, and subject to the provisions of that statute to the extent not inconsistent with the Act, and that it provide a balanced transportation system by developing, operating, and improving intercity rail passenger service. The Act also states that Amtrak will not be an agency or establishment of the United States Government. Amtrak thus is a corporation created by Congress to compete for the transportation business of the intercity traveller, to the end that the travelling public will have a choice of travel modes. The address of its headquarters is 400 North Capitol Street, NW., Washington, DC 20001. Telephone: (202) 383–3000.

(a) *Board of Directors.* Amtrak's major policies are established by its board of directors. The nine members of the board are selected as follows: The Secretary of Transportation serves as an ex-officio member and Amtrak's President, ex-officio, is Chairman of the Board; three members are appointed by the President of the United States and confirmed by the Senate (representing labor, State Governors, and business); two represent commuter authorities and are selected by the President from lists drawn up by those authorities; and two are selected by the Corporation's preferred stockholder, the Department of Transportation.

(b) *Officers and central management.* Amtrak is managed by a President and a Management Committee consisting of four Executive Vice Presidents. Reporting to the Executive Vice Presidents are eleven vice presidents representing sales, transportation marketing, planning and development, computer services, labor relations, finance and treasurer, personnel, passenger and operating services, government affairs, operations and maintenance, engineering, and the General Counsel. Areas handled as special matters with the authority of vice presidents, such as corporate communications, safety, real estate, procurement, materials management, police and security, contract administration, and internal audit are supervised by assistant vice presidents and directors.

(c) *Regional and field structure.* The need for decentralization of functions in the areas of passenger services and transportation operations has led to the creation of Amtrak's regional and field structure. Field offices are located in major cities such as Baltimore, Philadelphia, New York, Albany, Boston, Chicago, Seattle and Los Angeles. Pursuant to overall policies established at headquarters in Washington, DC, these offices handle matters like the assignment and scheduling of employees who work on board moving trains; purchase, stowage and preparation of food for dining service; maintenance and rehabilitation of rolling stock; and daily operating arrangements such as the make-up of trains or the cleaning and repairing of cars on trains.

(d) *Route system.* Amtrak's basic route system has been established pursuant to statutory guidelines, and in some cases by specific statutory directive. Out of a route system covering about 23,000 route-miles, Amtrak owns a right-of-way of about 2,600 track miles in the Northeast Corridor

(Washington-New York-Boston; New Haven-

Springfield; and Philadelphia-Harrisburg) and small segments of track near Albany, New York, and Kalamazoo, Michigan. In the Northeast Corridor Amtrak trains are run by operating crews consisting of Amtrak employees. On other routes, Amtrak operates trains on the tracks of about twenty different privately owned railroads and compensates the railroad for the use of their facilities and for the services of their employees, including engineers, conductors, and maintenance personnel. Those private railroads are responsible for the conditions of the roadbed and for coordinating the flow of traffic over their lines.

(e) *Operations.* Amtrak provides about 250 trains daily, serving about 500 stations in over forty states. Amtrak owns most of its cars and locomotives, some of its stations, and most of its repair facilities. Its capital improvements and almost half of its operating losses are supported principally through Federal financing, with some State, regional and local financial support for some trains and stations. Congress requires Amtrak to earn revenues equivalent to at least fifty percent of its operating costs, and it currently does so.

(f) *Revenue production.* The sale of tickets for transportation and accommodations, Amtrak's principal source of revenue, is accomplished through Amtrak ticket agents at stations, travel agencies, and five central reservation offices which service a nationwide telephone network. National Timetables contain basic information about routes, stations, and services.

§ 700.3 Availability of documents, assistance, and information.

(a) A member of the public having need for assistance or information concerning any of the matters described in § 700.2 should address his or her concerns in a letter or other written communication directed to the appropriate vice president or to the Director of Corporate Communications. Amtrak will bring such communications to the attention of the appropriate official if they are misdirected in the first instance. Formal requests for ''records'' under 5 U.S.C. 552(a)(3) of the Freedom of Information Act are to be made in accordance with the provisions of 49 CFR 701.4.

(b) The National Train Timetables described in § 700.2(f) are widely distributed in the continental United States and are available in major cities in Europe, Canada and Mexico. When they are updated (usually in April and October each year) each printing involves about 1,000,000 copies. They are ordinarily available at staffed Amtrak stations and copies are usually kept on hand in the offices of about 9800 travel agents who are authorized to sell Amtrak tickets. A person unable to obtain a copy locally should request one from the Director of Corporate Communications at the Washington, DC headquarters. The timetable depicts the major Amtrak train routes on a map of the United States, and most of the remainder of the booklet shows the schedules for specific trains. Several pages are used to offer travel information dealing with the availability of assistance to handicapped travellers, red cap service, purchase of tickets on board, use of credit cards and personal checks, handling of baggage, refunds for unused tickets and similar matters.

(c) Also available to members of the public at most staffed Amtrak stations, and usually maintained in the offices of travel agencies authorized to sell Amtrak tickets, is a copy of the Reservations and Ticketing Manual (RTM) which constitutes a compendium of information governing Amtrak employees in furnishing transportation to the travelling public. It contains substantial segments dedicated to the following topics: Amtrak's computer system and its communication codes; interline service agreements; passenger and baggage services; customer relations functions; reservations policy and procedures; acceptance of checks and credit cards; refunds; missed connection policies; ticketing; accommodations; employee pass travel; location maps for Amtrak stations; and intermodal state maps.

(d) A full statement of Amtrak's tariffs containing the fares for point-to-point travel, regional plan travel and all relevant travel conditions, such as

excursions, discounts, family plans, accommodations, etc., is contained in the privately published *Official Railway Guide*, which is available by subscription from its publisher at 424 West 33rd Street, New York, New York 10001. A copy of the guide can usually be found at each staffed Amtrak station, and at the offices of travel agents authorized to sell Amtrak tickets. Tariff changes which occur between issues of the Guide are published and widely distributed by Amtrak pending their publication in the next issue of the Guide.

(e) Each of the documents described in paragraphs (b) through (d) of this section is available to the public for inspection during regular business hours at the office of Amtrak's Freedom of Information Office at its headquarters at 400 North Capitol Street, NW., Washington, DC 20001, and at the office of the Division Manager, Human Resources, in New Haven, Philadelphia, Baltimore, New York, Los Angeles and Chicago. Each document has its own index. Since each index is useful only in connection with the document to which it pertains, and since requests for indices are uncommon, Amtrak has determined that publication of its indices as described in 5 U.S.C. 552(a)(2) would be unnecessary and impracticable.

PART 701—AMTRAK FREEDOM OF INFORMATION ACT PROGRAM

Sec.

701.1 General provisions.
701.2 Definitions.
701.3 Policy.
701.4 Amtrak public information.
701.5 Requirements for making requests.
701.6 Release and processing procedures.
701.7 Timing of responses to requests.
701.8 Responses to requests.
701.9 Business information.
701.10 Appeals.
701.11 Fees.
701.12 Other rights and services.

AUTHORITY: 5 U.S.C. 552; 49 U.S.C. 24301(e).

SOURCE: 63 FR 7311, Feb. 13, 1998, unless otherwise noted.

§ 701.1 General provisions.

This part contains the rules that the National Railroad Passenger Corporation (''Amtrak'') follows in processing requests for records under the Freedom of Information Act (FOIA), Title 5 of the United States Code, section 552. Information routinely provided to the public (*i.e.*, train timetables, press releases) may be obtained without following Amtrak's FOIA procedures. As a matter of policy, Amtrak may make discretionary disclosures of records or information exempt under the FOIA whenever disclosure would not foreseeably harm an interest protected by an FOIA exemption; however, this policy does not create any right enforceable in court.

§ 701.2 Definitions.

Unless the context requires otherwise in this part, masculine pronouns include the feminine gender and ''includes'' means ''includes but is not limited to.''

(a) *Amtrak or Corporation* means the National Railroad Passenger Corporation.

(b) *Appeal* means a request submitted to the President of Amtrak or designee for review of an adverse initial determination.

(c) *Business days* means working days; Saturdays, Sundays, and legal public holidays are excluded in computing response time for processing FOIA requests.

(d) *Disclose or disclosure* means making records available for examination or copying, or furnishing a copy of nonexempt responsive records.

(e) *Electronic data* means records and information (including E-mail) that are created, stored, and retrievable by electronic means.

(f) *Exempt information* means information that is exempt from disclosure under one or more of the nine exemptions to the FOIA.

(g) *Final determination* means a decision by the President of Amtrak or designee concerning a request for review of an adverse initial determination received in response to an FOIA request.

(h) *Freedom of Information Act or ''FOIA''* means the statute as codified in section 552 of Title 5 of the United States Code as amended.

(i) *Freedom of Information Officer* means the Amtrak official designated

to fulfill the responsibilities of implementing and administering the Freedom of Information Act as specifically designated under this part.

(j) *Initial determination* means a decision by an Amtrak FOIA Officer in response to a request for information under the FOIA.

(k) *Pages* means paper copies of standard office size or the cost equivalent in other media.

(l) *President* means the President and Chief Executive Officer (CEO) of the National Railroad Passenger Corporation (Amtrak) or designee.

(m) *Record* means any writing, drawing, map, recording, tape, film, photograph, or other documentary material by which information is preserved in any format, including electronic format. A record must exist and be in the possession and control of Amtrak at the time of the request to be subject to this part and the FOIA. The following are not included within the definition of the word ''record'':

(1) Library materials compiled for reference purposes or objects of substantial intrinsic value.

(2) Routing and transmittal sheets, notes, and filing notes which do not also include information, comments, or statements of substance.

(3) Anything that is not a tangible or documentary record such as an individual's memory or oral communication.

(4) Objects or articles, whatever their historical or value as evidence.

(n) *Request* means any request for records made pursuant to 5 U.S.C. 552(a)(3).

(o) *Requester or requesting party* means any person who has submitted a request to Amtrak.

(p) *Responsive records* means documents determined to be within the scope of a FOIA request.

§ 701.3 Policy.

(a) Amtrak will make records of the Corporation available to the public to the greatest practicable extent in keeping with the spirit of the law. Therefore, records of the Corporation are available for public inspection and copying as provided in this part with the exception of those that the Corporation specifically determines should not be disclosed either in the public interest, for the protection of private rights, or for the efficient conduct of public or corporate business, but only to the extent withholding is permitted by law.

(b) A record of the Corporation, or parts thereof, may be withheld from disclosure if it comes under one or more exemptions in 5 U.S.C. 552(b) or is otherwise exempted by law. Disclosure to a properly constituted advisory committee, to Congress, or to federal agencies does not waive the exemption.

(c) In the event one or more exemptions apply to a record, any reasonably segregable portion of the record will be made available to the requesting person after deletion of the exempt portions. The entire record may be withheld if a determination is made that nonexempt material is so inextricably intertwined that disclosure would leave only essentially meaningless words or phrases, or when it can be reasonably assumed that a skillful and knowledgeable person could reconstruct the deleted information.

(d) The procedures in this part apply only to records in existence at the time of a request. The Corporation has no obligation to create a record solely for the purpose of making it available under the FOIA or to provide a record that will be created in the future.

(e) Each officer and employee of the Corporation dealing with FOIA requests is directed to cooperate in making records available for disclosure under the Act in a prompt manner consistent with this part.

(f) The FOIA time limits will not begin to run until a request has been identified as being made under the Act and deemed received by the Freedom of Information Office.

(g) Generally, when a member of the public complies with the procedures established in this part for obtaining records under the FOIA, the request shall receive prompt attention, and a response shall be made within twenty business days.

§ 701.4 Amtrak public information.

(a) *Public reading room.* Amtrak maintains a public reading room at its headquarters at 60 Massachusetts Avenue, N.E. in Washington, D.C. The public reading room contains records required

under the FOIA to be regularly available for public inspection and copying. A current subject-matter index shall be maintained of records in the public reading room that are available for inspection and copying. The index shall be updated at least quarterly with respect to newly included records. A copy of the index shall be provided upon request at a cost not to exceed the direct cost of duplication.

(b) *Electronic reading room.* Amtrak will make available electronically reading room records created by the Corporation on or after November 1, 1996 on its World Wide Web site which can be accessed at http://www.Amtrak.com. An index of the Corporation's reading room records will also be made available at the web site. The index will indicate reading room records that are available electronically.

(c) *Frequently requested information.* The FOIA requires that copies of records, regardless of form or format, released pursuant to a FOIA request under 5 U.S.C. 552(a)(3) that have become or are likely to become the subject of subsequent requests for substantially the same records be made publicly available. Such records created by the Corporation after November 1, 1996 will be made available electronically while records created prior to this date will be made available for inspection and copying in Amtrak's public reading room.

(1) Amtrak shall decide on a case-by-case basis whether records fall into the category of ''frequently requested FOIA records'' based on the following factors:

(i) Previous experience with similar records;

(ii) The nature and type of information contained in the records;

(iii) The identity and number of requesters and whether there is widespread media or commercial interest in the records.

(2) The provision in this paragraph is intended for situations where public access in a timely manner is important. It is not intended to apply where there may be a limited number of requests over a short period of time from a few requesters. Amtrak may remove the records from this category when it is determined that access is no longer necessary.

(d) *Guide for making requests.* A guide on how to use the FOIA for requesting records from Amtrak shall be made available to the public upon request. Amtrak's major information systems will be described in the guide.

§ 701.5 Requirements for making requests.

(a) *General requirements.* (1) A FOIA request can be made by ''any person'' as defined in 5 U.S.C. 551(2), which encompasses individuals (including foreign citizens; partnerships; corporations; associations; and local, state, tribal, and foreign governments). A FOIA request may not be made by a Federal agency.

(2) A request must be in writing, indicate that it is being made under the FOIA and provide an adequate description of the records sought. The request should also include applicable information regarding fees as specified in paragraphs (d) and (e) of this section.

(b) *How to submit a request.* (1) A request must clearly state on the envelope and in the letter that it is a Freedom of Information Act or ''FOIA'' request.

(2) The request must be addressed to the Freedom of Information Office; National Railroad Passenger Corporation; 60 Massachusetts Avenue, N.E.; Washington, D.C. 20002. Requests will also be accepted by facsimile at (202) 906–2169. Amtrak cannot assure that a timely or satisfactory response under this part will be given to written requests addressed to Amtrak offices, officers, or employees other than the Freedom of Information Office. Amtrak employees receiving a communication in the nature of a FOIA request shall forward it to the FOIA Office expeditiously. Amtrak shall advise the requesting party of the date that an improperly addressed request is received by the FOIA Office.

(c) *Content of the request.* (1) *Description of records*—Identification of records sought under the FOIA is the responsibility of the requester. The records sought should be described in sufficient detail so that Amtrak personnel can locate them with a reasonable amount of effort. When possible,

the request should include specific information such as dates, title or name, author, recipient, subject matter of the record, file designation or number, or other pertinent details for each record or category of records sought.

(2) *Reformulation of a request.* Amtrak is not obligated to act on a request until the requester provides sufficient information to locate the record. Amtrak may offer assistance in identifying records and reformulating a request where: the description is considered insufficient, the production of voluminous records is required, or a considerable number of work hours would be required that would interfere with the business of the Corporation. The Freedom of Information Office shall notify the requester within ten business days of the type of information that will facilitate the search. The requesting party shall be given an opportunity to supply additional information and may submit a revised request, which will be treated as a new request.

(d) *Payment of fees.* The submission of a FOIA request constitutes an agreement to pay applicable fees accessed up to $25.00 unless the requesting party specifies a willingness to pay a greater or lesser amount or seeks a fee waiver or reduction in fees.

(1) *Fees in excess of $25.00.* When Amtrak determines or estimates that applicable fees are likely to exceed $25.00, the requesting party shall be notified of estimated or actual fees, unless a commitment has been made in advance to pay all fees. If only a portion of the fee can be estimated readily, Amtrak shall advise the requester that the estimated fee may be a portion of the total fee.

(i) In order to protect requesters from large and/or unexpected fees, Amtrak will request a specific commitment when it estimates or determines that fees will exceed $100.00.

(ii) A request shall not be considered received, and further processing carried out until the requesting party agrees to pay the anticipated total fee. Any such agreement must be memorialized in writing. A notice under this paragraph will offer the requesting party an opportunity to discuss the matter in order to reformulate the request to meet the requester's needs at a lower cost.

(iii) Amtrak will hold in abeyance for forty-five (45) days requests requiring agreement to pay fees and will thereafter deem the request closed. This action will not prevent the requesting party from refiling the FOIA request with a fee commitment at a subsequent date.

(2) *Fees in excess of $250.* When Amtrak estimates or determines that allowable charges are likely to exceed $250, an advance deposit of the entire fee may be required before continuing to process the request.

(e) *Information regarding fee category.* In order to determine the appropriate fee category, a request should indicate whether the information sought is intended for commercial use or whether the requesting party is a member of the staff of an educational or noncommercial scientific institution or a representative of the news media.

(f) *Records concerning other individuals.* If the request is for records concerning another individual, either a written authorization signed by that individual permitting disclosure of those records to the requesting party or proof that the individual is deceased (i.e., a copy of a death certificate or an obituary) will help to expedite processing of the request.

§ 701.6 Release and processing procedures.

(a) *General provisions.* In determining records that are responsive to a request, Amtrak will ordinarily include only records that exist and are in the possession and control of the Corporation as of the date that the search is begun. If any other date is used, the requesting party will be informed of that date.

(b) *Authority to grant or deny requests.* Amtrak's FOIA officer is authorized to grant or deny any request for records.

(c) *Notice of referral.* If Amtrak refers all or any part of the responsibility for responding to a request to another organization, the requesting party will be notified. A referral shall not be considered a denial of access within the meaning of this part. All consultations

and referrals of requests will be handled according to the date that the FOIA request was initially received.

(d) *Creating a record*. There is no obligation on the part of Amtrak to create, compile, or obtain a record to satisfy a FOIA request. The FOIA also does not require that a new computer program be developed to extract the records requested. Amtrak may compile or create a new record, however, when doing so would result in a more useful response to the requesting party or would be less burdensome to Amtrak than providing existing records. The cost of creating or compiling such a record may not be charged to the requester unless the fee for creating the record is equal to or less than the fee that would be charged for providing the existing record.

(e) *Incomplete records*. If the records requested are not complete at the time of a request, Amtrak may, at its discretion, inform the requester that complete nonexempt records will be provided when available without having to submit an additional request.

(f) *Electronic records*. Amtrak is not obligated to process a request for electronic records where creation of a record, programming or a particular format would result in a significant expenditure of resources or interfere with the corporation's operations.

§ 701.7 Timing of responses to requests.

(a) *General*. (1) The time limits of the FOIA will begin only after the requirements for submitting a request as established in § 701.5 have been met, and the request is deemed received by the Freedom of Information Office.

(2) A request for records shall be considered to have been received on the later of the following dates:

(i) The requester has agreed in writing to pay applicable fees in accordance with § 701.5(d), or

(ii) The fees have been waived in accordance with § 701.11(k), or

(iii) Payment in advance has been received from the requester when required in accordance with § 701.11(i).

(3) The time for responding to requests set forth in paragraph (b) of this section may be delayed if:

(i) The request does not sufficiently identify the fee category applicable to the request;

(ii) The request does not state a willingness to pay all fees;

(iii) A request seeking a fee waiver does not address the criteria for fee waivers set forth in § 701.11(k);

(iv) A fee waiver request is denied, and the request does not include an alternative statement indicating that the requesting party is willing to pay all fees.

(b) *Initial determination*. Whenever possible, an initial determination to release or deny a record shall be made within twenty business days after receipt of the request. In ''unusual circumstances'' as described in paragraph (d) of this section, the time for an initial determination may be extended for ten business days.

(c) *Multitrack processing*. (1) Amtrak may use two or more processing tracks by distinguishing between simple and more complex requests based on the amount of work and/or time needed to process a request or the number of pages involved.

(2) In general, when requests are received, Amtrak's FOIA Office will review and categorize them for tracking purposes. Requests within each track will be processed according to date of receipt.

(3) The FOIA Office may contact a requester when a request does not appear to qualify for fast track processing to provide an opportunity to limit the scope of the request and qualify for a faster track. Such notification shall be at the discretion of the FOIA Office and will depend largely on whether it is believed that a narrowing of the request could place the request on a faster track.

(d) *Unusual circumstances*. (1) The requesting party shall be notified in writing if the time limits for processing a request cannot be met because of unusual circumstances, and it will be necessary to extend the time limits for processing the request. The notification shall include the date by which the request can be expected to be completed. Where the extension is for more than ten business days, the requesting party will be afforded an opportunity to either modify the request so that it

may be processed within the time limits or to arrange an alternative time period for processing the initial request or modified request.

(2) If Amtrak believes that multiple requests submitted by a requester or by a group of requesters acting in concert constitute a single request that would otherwise involve unusual circumstances and the requests involve clearly related matters, the requests may be aggregated. Multiple requests concerning unrelated matters may not be aggregated.

(3) Unusual circumstances that may justify delay include:

(i) The need to search for and collect the requested records from other facilities that are separate from Amtrak's headquarters offices.

(ii) The need to search for, collect, and examine a voluminous amount of separate and distinct records sought in a single request.

(iii) The need for consultation, which shall be conducted with all practicable speed, with agencies having a substantial interest in the determination of the request, or among two or more Amtrak components having a substantial subject-matter interest in the request.

(e) *Expedited processing*. (1) Requests and appeals may be taken out of order and given expedited treatment whenever it is determined that they involve a compelling need, which means:

(i) Circumstances in which the lack of expedited treatment could reasonably be expected to pose an imminent threat to the life or physical safety of an individual; and

(ii) An urgency to inform the public about an actual or alleged Amtrak activity, if made by a person primarily engaged in disseminating information.

(2) A request for expedited processing may be made at the time of the initial request for records or at a later date.

(3) A requester seeking expedited processing must submit a statement, certified to be true and correct to the best of that person's knowledge and belief, explaining in detail the basis for requesting expedited processing. This statement must accompany the request in order to be considered and responded to within the ten calendar days required for decisions on expedited access.

(4) A requester who is not a full-time member of the news media must establish that he is a person whose main professional activity or occupation is information dissemination, though it need not be his sole occupation. A requester must establish a particular urgency to inform the public about the Amtrak activity involved in the request.

(5) Within ten business days of receipt of a request for expedited processing, Amtrak shall determine whether to grant such a request and notify the requester of the decision. If a request for expedited treatment is granted, the request shall be given priority and shall be processed as soon as practicable.

(6) Amtrak shall provide prompt consideration of appeals of decisions denying expedited processing.

§ 701.8 Responses to requests.

(a) *Granting of requests*. When an initial determination is made to grant a request in whole or in part, the requesting party shall be notified in writing and advised of any fees charged under § 701.11(e). The records shall be disclosed to the requesting party promptly upon payment of applicable fees.

(b) *Adverse determination of requests*. (1) *Types of denials*—The requesting party shall be notified in writing of a determination to deny a request in any respect. Adverse determinations or denials of records consist of:

(i) A determination to withhold any requested record in whole or in part;

(ii) A determination that a requested record does not exist or cannot be located;

(iii) A denial of a request for expedited treatment; and

(iv) A determination on any disputed fee matter including a denial of a request for a fee waiver.

(2) *Deletions*. When practical, records disclosed in part shall be marked or annotated to show both the amount and location of the information deleted.

(3) *Content of denial letter*. The denial letter shall be signed by the Freedom of Information Officer or designee and shall include:

(i) A brief statement of the reason(s) for the adverse determination including any FOIA exemptions applied in denying the request;

(ii) An estimate of the volume of information withheld (number of pages or some other reasonable form of estimation). An estimate does not need to be provided if the volume is indicated through deletions on records disclosed in part, or if providing an estimate would harm an interest protected by an applicable exemption;

(iii) A statement that an appeal may be filed under § 701.10 and a description of the requirements of that section; and

(iv) The name and title or position of the person responsible for the denial.

§ 701.9 Business information.

(a) *General*. Business information held by Amtrak will be disclosed under the FOIA only under this section.

(b) *Definitions*. For purposes of this section, the following definitions apply:

(1) *Business information* means commercial or financial information held by Amtrak that may be protected from disclosure under Exemption 4 of the FOIA, 5 U.S.C. 552(b)(4).

(2) *Submitter* means any person or entity including partnerships; corporations; associations; and local, state, tribal, and foreign governments.

(c) *Designation of business information*. A submitter of business information will use good faith efforts to designate, by appropriate markings, either at the time of submission or at a reasonable time thereafter, any portions of its submission that it considers to be protected from disclosure under Exemption 4. These designations will expire ten years after the date of the submission unless the submitter requests and provides justification for a longer designation period.

(d) *Notice to submitters*. Amtrak shall provide a submitter with prompt written notice of an FOIA request or an appeal that seeks its business information when required under paragraph (e) of this section, except as provided in paragraph (h), in order to give the submitter an opportunity to object to disclosure of any specified portion of the information under paragraph (f). The notice shall either describe the business information requested or include copies of the requested records or portions of records containing the information.

(e) *When notice is required*. Notice shall be given to a submitter when:

(1) The information has been designated in good faith by the submitter as information considered protected from disclosure under Exemption 4; or

(2) Amtrak has reason to believe that the information may be protected from disclosure under Exemption 4.

(f) *Opportunity to object to disclosure*. Amtrak will allow a submitter a reasonable amount of time to respond to the notice described in paragraph (d) of this section.

(1) A detailed written statement must be submitted to Amtrak if the submitter has any objection to disclosure. The statement must specify all grounds for withholding any specified portion of the information sought under the FOIA. In the case of Exemption 4, it must show why the information is a trade secret or commercial or financial information that is privileged or confidential.

(2) In the event that a submitter fails to respond within the time specified in the notice, the submitter will be considered to have no objection to disclosure of the information sought under the FOIA.

(3) Information provided by a submitter in response to the notice may be subject to disclosure under the FOIA.

(g) *Notice of intent to disclose*. Amtrak shall consider a submitter's objections and specific grounds for disclosure in making a determination whether to disclose the information. In any instance, when a decision is made to disclose information over the objection of a submitter, Amtrak shall give the submitter written notice which shall include:

(1) A statement of the reason(s) why each of the submitter's objections to disclosure was not sustained;

(2) A description of the information to be disclosed; and

(3) A specified disclosure date, which shall be a reasonable time subsequent to the notice.

(h) *Exceptions to notice requirements.* The notice requirements of this section shall not apply if:

(1) Amtrak determines that the information should not be disclosed;

(2) The information has been published or has been officially made available to the public;

(3) Disclosure of the information is required by law (other than the FOIA);

(4) The designation made by the submitter under paragraph (c) of this section appears obviously frivolous. In such a case, Amtrak shall within a reasonable time prior to a specified disclosure date, give the submitter written notice of the final decision to disclose the information; or

(5) The information requested is not designated by the submitter as exempt from disclosure in accordance with this part, unless Amtrak has substantial reason to believe that disclosure of the information would result in competitive harm.

(i) *Notice of a FOIA lawsuit.* Whenever a FOIA requester files a lawsuit seeking to compel disclosure of business information, Amtrak shall promptly notify the submitter.

(j) *Notice to requesters.* (1) When Amtrak provides a submitter with notice and an opportunity to object to disclosure under paragraph (f) of this section, the FOIA Office shall also notify the requester(s).

(2) When Amtrak notifies a submitter of its intent to disclose requested information under paragraph (g) of this section, Amtrak shall also notify the requester(s).

(3) When a submitter files a lawsuit seeking to prevent the disclosure of business information, Amtrak shall notify the requester(s).

§ 701.10 Appeals.

(a) *Appeals of adverse determinations.* (1) The requesting party may appeal:

(i) A decision to withhold any requested record in whole or in part;

(ii) A determination that a requested record does not exist or cannot be located;

(iii) A denial of a request for expedited treatment; or

(iv) Any disputed fee matter or the denial of a request for a fee waiver.

(2) The appeal must be addressed to the President and Chief Executive Officer (CEO); National Railroad Passenger Corporation; 60 Massachusetts Avenue, N.E., Washington, D.C. 20002.

(3) The appeal must be in writing and specify the relevant facts and the basis for the appeal. The appeal letter and envelope must be marked prominently ''Freedom of Information Act Appeal'' to ensure that it is properly routed.

(4) The appeal must be received by the President's Office within thirty (30) days of the date of denial.

(5) An appeal will not be acted upon if the request becomes a matter of FOIA litigation.

(b) *Responses to appeals.* The decision on any appeal shall be made in writing.

(1) A decision upholding an adverse determination in whole or in part shall contain a statement of the reason(s) for such action, including any FOIA exemption(s) applied. The requesting party shall also be advised of the provision for judicial review of the decision contained in 5 U.S.C. 552(a)(4)(B).

(2) If the adverse determination is reversed or modified on appeal in whole or in part, the requesting party shall be notified, and the request shall be reprocessed in accordance with the decision.

(c) *When appeal is required.* The requesting party must appeal any adverse determination prior to seeking judicial review.

§ 701.11 Fees.

(a) *General.* Amtrak shall charge for processing requests under the FOIA in accordance with this section. A fee of $9.50 per quarter hour shall be charged for search and review. For information concerning other processing fees, refer to paragraph (e) of this section. Amtrak shall collect all applicable fees before releasing copies of requested records to the requesting party. Payment of fees shall be made by check or money order payable to the National Railroad Passenger Corporation.

(b) *Definitions.* For purposes of this section:

(1) *Search* means the process of looking for and retrieving records or information responsive to a request. It includes page-by-page or line-by-line identification of information within

records and also includes reasonable efforts to locate and retrieve information from records maintained in electronic form or format.

(2) *Review* means the process of examining a record located in response to a request to determine whether one or more of the statutory exemptions of the FOIA apply. Processing any record for disclosure includes doing all that is necessary to redact the record and prepare it for release. Review time includes time spent considering formal objection to disclosure by a commercial submitter under § 701.9, but does not include time spent resolving general legal or policy issues regarding the application of exemptions. Review costs are recoverable even if a record ultimately is not disclosed.

(3) *Reproduction* means the making of a copy of a record or the information contained in it in order to respond to a FOIA request. Copies can take the form of paper, microform, audiovisual materials, or electronic records (*i.e.*, magnetic tape or disk) among others. Amtrak shall honor a requester's specified preference for the form or format of disclosure if the record is readily reproducible with reasonable effort in the requested form or format by the office responding to the request.

(4) *Direct costs* means those expenses actually incurred in searching for and reproducing (and, in the case of commercial use requests, reviewing) records to respond to a FOIA request. Direct costs include such costs as the salary of the employee performing the work (the basic rate of pay for the employee plus applicable benefits and the cost of operating reproduction equipment). Direct costs do not include overhead expenses such as the costs of space and heating or lighting of the facility.

(c) *Fee categories*. There are four categories of FOIA requesters for fee purposes: ''commercial use requesters,'' ''representatives of the news media,'' ''educational and non-commercial scientific institution requesters,'' and ''all other requesters.'' The categories are defined in paragraphs (c)(1) through (5), and applicable fees, which are the same for two of the categories, will be assessed as specified in paragraph (d) of this section.

(1) *Commercial requesters*. The term ''commercial use'' request refers to a request from or on behalf of a person who seeks information for a use or purpose that furthers his commercial, trade, or profit interests, including furthering those interests through litigation. Amtrak shall determine, whenever reasonably possible, the use to which a requester will put the records sought by the request. When it appears that the requesting party will put the records to a commercial use, either because of the nature of the request itself or because Amtrak has reasonable cause to doubt the stated intended use, Amtrak shall provide the requesting party with an opportunity to submit further clarification. Where a requester does not explain the use or where explanation is insufficient, Amtrak may draw reasonable inferences from the requester's identity and charge accordingly.

(2) *Representative of the news media or news media requester* refers to any person actively gathering news for an entity that is organized and operated to publish or broadcast news to the public. The term ''news'' means information that is about current events or that would be of current interest to the public. Examples of news media entities include television or radio stations broadcasting to the public at large and publishers of periodicals (but only in those instances where they can qualify as disseminators of news). For ''freelance'' journalists to be regarded as working for a news organization, they must demonstrate a solid basis for expecting publication through an organization. A publication contract would be the clearest proof, but Amtrak shall also look to the past publication record of a requester in making this determination. A request for records supporting the news dissemination function of the requester shall not be considered to be for commercial use.

(3) *Educational institution* refers to a preschool, a public or private elementary or secondary school, an institution of undergraduate higher education, an institution of graduate higher education, an institution of professional education, or an institution of vocational education that operates a program of scholarly research. To be in

this category, a requester must show that the request is authorized by and is made under the auspices of a qualifying institution and that the records are not sought for commercial use but to further scholarly research.

(4) *Noncommercial scientific institution* refers to an institution that is not operated on a ''commercial'' basis, as that term is defined in paragraph (c)(1) of this section, and that is operated solely for the purpose of conducting scientific research, the results of which are not intended to promote any particular product or industry. To be in this category, the requesting party must show that the request is authorized by and is made under the auspices of a qualifying institution and that the records are not sought for commercial use but to further scientific research.

(5) *Other requesters* refers to requesters who do not come under the purview of paragraphs (c)(1) through (4) of this section.

(d) *Assessing fees*. In responding to FOIA requests, Amtrak shall charge the following fees unless a waiver or a reduction in fees has been granted under paragraph (k) of this section:

(1) *''Commercial use'' requesters:* The full allowable direct costs for search, review, and duplication of records.

(2) *''Representatives of the news media'' and ''educational and non-commercial scientific institution'' requesters:* Duplication charges only, excluding charges for the first 100 pages.

(3) *''All other'' requesters:* The direct costs of search and duplication of records. The first 100 pages of duplication and the first two hours of search time shall be provided without charge.

(e) *Schedule of fees*. (1) *Manual searches*—Personnel search time includes time expended in either manual searches for paper records, searches using indices, review of computer search results for relevant records, and personal computer system searches.

(2) *Computer searches*. The direct costs of conducting a computer search will be charged. These direct costs will include the cost of operating a central processing unit for that portion of the operating time that is directly attributable to searching for responsive records as well as the costs of operator/programmer salary apportionable to the search.

(3) *Duplication fees*. Duplication fees will be charged all requesters subject to limitations specified in paragraph (d) of this section. Amtrak shall charge 25 cents per page for a paper photocopy of a record. For copies produced by computer (such as tapes or printouts), Amtrak will charge the direct costs, including the operator time in producing the copy. For other forms of duplication, Amtrak will charge the direct costs of that duplication.

(4) *Review fees*. Review fees will be assessed for commercial use requests. Such fees will be assessed for review conducted in making an initial determination, or upon appeal, when review is conducted to determine whether an exemption not previously considered is applicable.

(5) *Charges for other services*. The actual cost or amount shall be charged for all other types of output, production, and duplication (e.g., photographs, maps, or printed materials). Determinations of actual cost shall include the commercial cost of the media, the personnel time expended in making the item available for release, and an allocated cost for the equipment used in producing the item. The requesting party will be charged actual production costs when a commercial service is required. Items published and available through Amtrak will be made available at the publication price.

(6) *Charges for special services*. Apart from the other provisions of this section, when Amtrak chooses as a matter of discretion to provide a special service such as certifying that records are true copies or sending records by other than ordinary mail, the direct costs of providing such services shall be charged.

(f) *Commitment to pay fees*. When Amtrak determines or estimates that applicable fees will likely exceed $25.00, the requesting party will be notified of the actual or estimated amount unless a written statement has been received indicating a willingness to pay all fees. To protect requesters from large and/or unexpected fees, Amtrak will request a

specific commitment when it is estimated or determined that fees will exceed $100.00. See § 701.5(d) for additional information.

(g) *Restrictions in accessing fees.* (1) *General*— Fees for search and review will not be charged for a quarter-hour period unless more than half of that period is required.

(2) *Minimum fee.* No fees will be charged if the cost of collecting the fee is equal to or greater than the fee itself. That cost includes the costs to Amtrak for billing, receiving, recording, and processing the fee for deposit, which has been deemed to be $10.00.

(3) *Computer searches.* With the exception of requesters seeking documents for commercial use, Amtrak shall not charge fees for computer search until the cost of search equals the equivalent dollar amount of two hours of the salary of the operator performing the search.

(h) *Nonproductive searches.* Amtrak may charge for time spent for search and review even if responsive records are not located or if the records located are determined to be entirely exempt from disclosure.

(i) *Advance payments.* (1) When Amtrak estimates or determines that charges are likely to exceed $250, an advance payment of the entire fee may be required before continuing to process the request.

(2) When there is evidence that the requester may not pay the fees that would be incurred by processing the request, an advance deposit may be required. Amtrak may require the full amount due plus applicable interest and an advance payment of the full amount of anticipated fees before beginning to process a new request or continuing to process a pending request where a requester has previously failed to pay a properly charged FOIA fee within thirty (30) days of the date of billing. The time limits of the FOIA will begin only after Amtrak has received such payment.

(3) Amtrak will hold in abeyance for forty-five (45) days requests where deposits are due.

(4) Monies owed for work already completed (i.e., before copies are sent to a requester) shall not be considered an advance payment.

(5) Amtrak shall not deem a request as being received in cases in which an advance deposit or payment is due, and further work will not be done until the required payment is received.

(j) *Charging interest.* Amtrak may charge interest on any unpaid bill for processing charges starting on the 31st day following the date of billing the requester. Interest charges will be assessed at the rate that Amtrak pays for short-term borrowing.

(k) *Waiver or reduction of fees.* (1) *Automatic waiver of fees*—When the costs for a FOIA request total $10.00 or less, fees shall be waived automatically for all requesters regardless of category.

(2) *Other fee waivers.* Decisions to waive or reduce fees that exceed the automatic waiver threshold shall be made on a case-by-case basis. Records responsive to a request will be furnished without charge or at below the established charge where Amtrak determines, based on all available information, that disclosure of the requested information is in the public interest because:

(i) It is likely to contribute significantly to public understanding of the operations or activities of Amtrak, and

(ii) It is not primarily in the commercial interest of the requesting party.

(3) To determine whether the fee waiver requirement in paragraph (k)(2)(i) of this section is met, Amtrak will consider the following factors:

(i) *The subject of the request—whether the subject of the requested records concerns the operations or activities of Amtrak.* The subject of the requested records must concern identifiable operations or activities of Amtrak with a connection that is direct and clear, not remote or attenuated.

(ii) *The informative value of the information to be disclosed—whether the disclosure is likely to contribute to an understanding of Amtrak operations or activities.* The disclosable portions of the requested records must be meaningfully informative about Amtrak's operations or activities in order to be found to be likely to contribute to an increased public understanding of those operations or activities. The disclosure of

information that already is in the public domain, in either a duplicative or a substantially identical form, would not be as likely to contribute to such understanding where nothing new would be added to the public's understanding.

(iii) *The contribution to an understanding of the subject by the public likely to result from disclosure—whether disclosure of the requested information will contribute to public understanding.* The disclosure must contribute to the understanding of a reasonably broad audience of persons interested in the subject as opposed to the individual understanding of the requester. A requester's ability and expertise in the subject area as well as the requester's intention to effectively convey information to the public shall be considered. It shall be presumed that a representative of the news media will satisfy this consideration.

(iv) *The significance of the contribution to public understanding—whether the disclosure is likely to contribute significantly to public understanding of Amtrak operations or activities.* The public's understanding of the subject in question, as compared to the level of public understanding existing prior to the disclosure, must be enhanced by the disclosure to a significant extent.

(4) To determine whether the fee waiver requirement in paragraph (k)(2)(ii) of this section is met, Amtrak will consider the following factors:

(i) *The existence and magnitude of a commercial interest—whether the requesting party has a commercial interest that would be furthered by the requested disclosure.* Amtrak shall consider any commercial interest of the requesting party (with reference to the definition of ''commercial use'' in paragraph (c)(1) of this section), or any person on whose behalf the requesting party may be acting that would be furthered by the requested disclosure. Requesters shall be given an opportunity to provide explanatory information regarding this consideration.

(ii) *The primary interest in disclosure—whether the magnitude of the identified commercial interest of the requester is sufficiently large in comparison with the public interest in disclosure, that disclosure is ''primarily in the commercial interest of the requester.''* A fee waiver or reduction is justified where the public interest standard is satisfied and public interest is greater in magnitude than any identified commercial interest in disclosure.

(5) Requests for a fee waiver will be considered on a case-by-case basis, based upon the merits of the information provided. Where it is difficult to determine whether the request is commercial in nature, Amtrak may draw inference from the requester's identity and the circumstances of the request.

(6) Requests for a waiver or reduction of fees must address the factors listed in paragraphs (k) (3) and (4) of this section. In all cases, the burden shall be on the requesting party to present evidence of information in support of a request for a waiver of fees.

(l) *Aggregating requests.* A requester may not file multiple requests at the same time in order to avoid payment of fees. Where Amtrak reasonably believes that a requester or a group of requesters acting in concert is attempting to divide a request into a series of requests for the purpose of avoiding fees, Amtrak may aggregate those requests and charge accordingly. Amtrak may presume that multiple requests of this type made within a thirty-day period have been made in order to avoid fees. Where requests are separated by a longer period, Amtrak may aggregate them only when there exists a solid basis for determining that aggregation is warranted. Multiple requests involving unrelated matters may not be aggregated.

§ 701.12 Other rights and services.

Nothing in this part shall be construed as entitling any person, as of right, to any service or the disclosure of any record to which such person is not entitled under the FOIA.

CHAPTER VIII—NATIONAL TRANSPORTATION SAFETY BOARD

Part		*Page*
800	Organization and functions of the Board and delegations of authority	1169
801	Public availability of information	1175
802	Rules implementing the Privacy Act of 1974	1182
803	Official seal	1189
804	Rules implementing the Government in the Sunshine Act	1190
805	Employee responsibilities and conduct	1194
806	National security information policy and guidelines, implementing regulations	1202
807	Enforcement of nondiscrimination on the basis of handicap in programs or activities conducted by the National Transportation Safety Board	1204
821	Rules of practice in air safety proceedings	1209
825	Rules of procedure for merchant marine appeals from decisions of the Commandant, U.S. Coast Guard	1226
826	Rules implementing the Equal Access to Justice Act of 1980	1228
830	Notification and reporting of aircraft accidents or incidents and overdue aircraft, and preservation of aircraft wreckage, mail, cargo, and records	1235
831	Accident/incident investigation procedures	1237
835	Testimony of Board employees	1243
837	Production of records in legal proceedings	1246
840	Rules pertaining to notification of railroad accidents	1247
845	Rules of practice in transportation; accident/incident hearings and reports	1249
850	Coast Guard—National Transportation Safety Board marine casualty investigations	1252
851–999	[Reserved]	

PART 800—ORGANIZATION AND FUNCTIONS OF THE BOARD AND DELEGATIONS OF AUTHORITY

Subpart A—Organization and Functions

Sec.
800.1 Purpose.
800.2 Organization.
800.3 Functions.
800.4 Operation.
800.5 Office locations.
800.6 Availability of information and materials.

Subpart B—Delegations of Authority to Staff Members

800.21 Purpose.
800.22 Delegation to the Managing Director.
800.23 Delegation to the administrative law judges, Office of Administrative Law Judges.
800.24 Delegation to the General Counsel.
800.25 Delegation to the Directors of Office of Aviation Safety, Office of Railroad Safety, Office of Highway Safety, Office of Marine Safety, and Office of Pipeline and Hazardous Materials Safety.
800.26 Delegation to the Chief, Public Inquiries Branch.
800.27 Delegation to investigative officers and employees of the Board.
800.28 Delegation to the Chief Financial Officer.
APPENDIX TO PART 800—REQUEST TO THE SECRETARY OF THE DEPARTMENT OF TRANSPORTATION TO INVESTIGATE CERTAIN AIRCRAFT ACCIDENTS

AUTHORITY: Independent Safety Board Act of 1974, as amended (49 U.S.C. 1101 *et seq.*); Federal Aviation Act of 1958, as amended (49 U.S.C. 40101 *et seq.*).

SOURCE: 49 FR 26232, June 27, 1984, unless otherwise noted.

Subpart A—Organization and Functions

§ 800.1 Purpose.

This part describes the organization, functions, and operation of the National Transportation Safety Board (Board).

§ 800.2 Organization.

The Board consists of five Members appointed by the President with the advice and consent of the Senate. One of the Members is designated by the President as Chairman with the advice and consent of the Senate and one as Vice Chairman. The Members exercise various functions, powers, and duties set forth in the Federal Aviation Act of 1958, as amended (49 U.S.C. 40101 *et seq.*), and the Independent Safety Board Act of 1974, as amended (49 U.S.C. 1101 *et seq.*). The Board is an independent agency of the United States. More detailed descriptions of the Board and its work are contained in other parts of this chapter VIII, notably parts 825, 830 through 835, and 840 through 850. Various special delegations of authority from the Board and the Chairman to the staff are set forth in subpart B of this part. The Board's staff is comprised of the following principal components:

(a) The Office of the Managing Director, which assists the Chairman in the discharge of his functions as executive and administrative head of the Board; coordinates and directs the activities of the staff; is responsible for the day-to-day operation of the Board; and recommends and develops plans to achieve the Board's program objectives. The Office of the Managing Director also provides executive secretariat services to the Board.

(b) The Office of Government, Public, and Family Affairs, which supplies the Congress and Federal, State, and local government agencies with information regarding the Safety Board's activities, programs and objectives; supplies the public, the transportation industry and the news media with current, accurate information concerning the work, programs, and objectives of the Board; coordinates public and private responsibilities, including aid to survivors and families of accident victims, in the wake of transportation disasters. This Office maintains the 24-hour Communications Center, which assists in coordinating accident notification and launch operations for all modes and provides an off-hour base for family assistance functions during accident investigations.

(c) The Office of the General Counsel, which provides legal advice and assistance to the Board and its staff; prepares Board rules, opinions and/or orders, and advice to all offices on matters of legal significance; and represents the Board in judicial matters

to which the Board is a party or in which the Board is interested.

(d) The Office of Administrative Law Judges, which conducts all formal proceedings arising under the Federal Aviation Act of 1958, as amended, including proceedings involving civil penalties and suspension or revocation of certificates, and appeals from actions of the Federal Aviation Administrator in refusing to issue airman certificates.

(e) The Office of Aviation Safety, which conducts investigations of all aviation accidents within the Board's jurisdiction; prepares reports for submission to the Board and release to the public setting forth the facts and circumstances of such accidents, including a recommendation as to the probable cause(s); determines the probable cause(s) of accidents when delegated authority to do so by the Board; initiates safety recommendations to prevent future aviation accidents; participates in the investigation of accidents that occur in foreign countries and involve U.S.-registered and/or U.S.-manufactured aircraft; and conducts special investigations into selected aviation accidents involving safety issues of concern to the Board.

(f) The Office of Railroad Safety, which conducts investigations of railroad accidents within the Board's jurisdiction; prepares reports for submission to the Board and release to the public setting forth the facts and circumstances of such accidents, including a recommendation as to the probable cause(s); determines the probable cause(s) of accidents when delegated authority to do so by the Board; initiates safety recommendations to prevent future railroad accidents; and conducts special investigations into selected rail accidents involving safety issues of concern to the Board.

(g) The Office of Highway Safety, which conducts investigations of highway accidents, including railroad grade-crossing accidents, within the Board's jurisdiction; prepares reports for submission to the Board and release to the public setting forth the facts and circumstances of such accidents, including a recommendation as to the probable cause(s); determines the probable cause(s) of accidents when delegated authority to do so by the Board; initiates safety recommendations to prevent future highway accidents; and conducts special investigations into selected highway accidents involving safety issues of concern to the Board.

(h) The Office of Marine Safety, which conducts investigations of marine accidents within the Board's jurisdiction; prepares reports for submission to the Board and release to the public setting forth the facts and circumstances of such accidents, including a recommendation as to the probable cause(s); determines the probable cause(s) of accidents when delegated authority to do so by the Board; initiates safety recommendations to prevent future marine accidents; participates in the investigation of accidents that occur in foreign countries and that involve U.S.-registered vessels; and conducts special investigations into selected marine accidents involving safety issues of concern to the Board.

(i) The Office of Pipeline and Hazardous Materials Safety, which conducts investigations of pipeline and hazardous materials accidents within the Board's jurisdiction; prepares reports for submission to the Board and release to the public setting forth the facts and circumstances of such accidents, including a recommendation as to the probable cause(s); determines the probable causes of accidents when delegated authority to do so by the Board; initiates safety recommendations to prevent future pipeline and hazardous materials accidents; and conducts special investigations into selected pipeline and hazardous materials accidents involving safety issues of concern to the Board.

(j) The Office of Research and Engineering, which conducts research and carries out analytical studies and tests involving all modes, including readouts of voice and data recorders, flight path analysis and computer simulation/animation, component examination and material failure analysis; conducts safety studies of specific safety issues; performs statistical analyses of transportation accident and incident data; maintains archival records of the Board's accident investigation and

safety promotion activities and supports public access to these records; and administers the Board's information technology infrastructure, including computer systems, networks, databases, and application software.

(k) The Office of Safety Recommendations & Accomplishments, which oversees the Board's safety recommendations program, including the Board's ''MOST WANTED'' recommendations, and the Board's safety accomplishment program.

[60 FR 61488, Nov. 30, 1996, as amended at 61 FR 14521, April 2, 1995; 63 FR 71605, Dec. 29, 1998; 64 FR 5621, Feb. 4, 1999]

§ 800.3 Functions.

(a) The primary function of the Board is to promote safety in transportation. The Board is responsible for the investigation, determination of facts, conditions, and circumstances and the cause or probable cause or causes of: all accidents involving civil aircraft, and certain public aircraft; highway accidents, including railroad grade-crossing accidents, the investigation of which is selected in cooperation with the States; railroad accidents in which there is a fatality, substantial property damage, or which involve a passenger train; pipeline accidents in which there is a fatality, significant injury to the environment, or substantial property damage; and major marine casualties and marine accidents involving a public and a non-public vessel or involving Coast Guard functions. The Board makes transportation safety recommendations to Federal, State, and local agencies and private organizations to reduce the likelihood of recurrences of transportation accidents. It initiates and conducts safety studies and special investigations on matters pertaining to safety in transportation, assesses techniques and methods of accident investigation, evaluates the effectiveness of transportation safety consciousness and efficacy in preventing accidents of other Government agencies, and evaluates the adequacy of safeguards and procedures concerning the transportation of hazardous materials.

(b) Upon application of affected parties, the Board reviews in quasijudicial proceedings, conducted pursuant to the provisions of the Administrative Procedure Act, 5 U.S.C. 551 *et seq.*, denials by the Administrator of the Federal Aviation Administrator of applications for airman certificates and orders of the Administrator modifying, amending, suspending, or revoking certificates or imposing civil penalties. The Board also reviews on appeal the decisions of the Commandant, U.S. Coast Guard, on appeals from orders of administrative law judges suspending, revoking, or denying seamen licenses, certificates, or documents.

(c) The Board, as provided in Part 801 of this chapter, issues reports and orders pursuant to its duties to determine the cause or probable cause or causes of transportation accidents and to report the facts, conditions and circumstances relating to such accidents; issues opinions and/or orders after reviewing on appeal the imposition of a civil penalty or the suspension, amendment, modification, revocation, or denial of any certificate or license issued by the Secretary of the Department of Transportation (who acts through the Administrator of the Federal Aviation Administration or the Commandant of the United States Coast Guard); and issues and makes available to the public safety recommendations, safety studies, and reports of special investigations.

[60 FR 61488, Nov. 30, 1995]

§ 800.4 Operation.

In exercising its functions, duties, and responsibilities, the Board utilizes:

(a) The Board's staff, consisting of specialized offices dealing with particular areas of transportation safety and performing administrative and technical work for the Board. The staff advises the Board and performs duties for the Board that are inherent in the staff's position in the organizational structure or that the Board has delegated to it. The staff is described more fully in § 800.2.

(b) Rules published in the FEDERAL REGISTER and codified in this Title 49 of the Code of Federal Regulations. These rules may be inspected in the Board's public reference room, or purchased from the Superintendent of Documents, Government Printing Office.

(c) Procedures and policies set forth in the agency's internal directives system which govern the activities of employees and organizational components of the Board. The internal directives system is designated as the NTSB Manual and consists of instructions which are called NTSB Orders and NTSB Notices.

(d) Meetings of the Board Members conducted pursuant to the Government in the Sunshine Act.

(e) Public hearings in connection with transportation accident investigations and public hearings and oral arguments in proceedings concerned with certificates or licenses issued by the Secretary or an Administrator of the Department of Transportation. They are held at the time and place announced in the notices thereof which are served on the parties to the proceedings or published in the FEDERAL REGISTER.

[49 FR 26232, June 27, 1984, as amended at 60 FR 61489, Nov. 30, 1995]

§ 800.5 Office locations.

The principal offices of the National Transportation Safety Board are located at 490 L'Enfant Plaza East, SW., Washington, DC 20594. The Board maintains field offices in selected cities throughout the United States.

[60 FR 61489, Nov. 30, 1995]

§ 800.6 Availability of information and materials.

Part 801 of this chapter provides detailed information concerning the availability of Board documents and records. That part also provides a fee schedule and information concerning inspection and copying.

Subpart B—Delegations of Authority to Staff Members

§ 800.21 Purpose.

The purpose of this Subpart B is to publish special delegations of authority to staff members.

[60 FR 61489, Nov. 30, 1995]

§ 800.22 Delegation to the Managing Director.

(a) The Board delegates to the Managing Director the authority to:

(1) Make the final determination, on appeal, as to whether to withhold a Board record from inspection or copying, pursuant to Part 801 of this chapter.

(2) Approve for publication in the FEDERAL REGISTER notices concerning issuance of accident reports and safety recommendations and responses to safety recommendations, as required by sections 304(a)(2) and 307 of the Independent Safety Board Act of 1974 (49 U.S.C. 1131(d) and 1135(c)).

(b) The Chairman delegates to the Managing Director the authority to exercise and carry out, subject to the direction and supervision of the Chairman, the following functions vested in the Chairman:

(1) The appointment and supervision of personnel employed by the Board;

(2) The distribution of business among such personnel and among organizational components of the Board; and

(3) The use and expenditure of funds.

[60 FR 61489, Nov. 30, 1995]

§ 800.23 Delegation to the administrative law judges, Office of Administrative Law Judges.

The Board delegates to the administrative law judges the authority generally detailed in its procedural regulations at Part 821 of this chapter.

[60 FR 61489, Nov. 30, 1995]

§ 800.24 Delegation to the General Counsel.

The Board delegates to the General Counsel the authority to:

(a) Approve, disapprove, request more information, or otherwise handle requests for testimony of Board employees with respect to their participation in the investigation of accidents, and, upon receipt of notice that an employee has been subpoenaed, to make arrangements with the court either to have the employee excused from testifying or to give the employee permission to testify in accordance with the provisions of Part 835 of this Chapter.

(b) Approve or disapprove in safety enforcement proceedings, for good cause shown, requests for extensions of time or for other changes in procedural requirements subsequent to the initial decision, grant or deny requests to file additional and/or *amicus* briefs pursuant to §§ 821.9 and 821.48 of this Chapter, and raise on appeal any issue the resolution of which he deems important to the proper disposition of proceedings under § 821.49 of this Chapter.

(c) Approve or disapprove, for good cause shown, requests to extend the time for filing comments on proposed new or amended regulations.

(d) Issue regulations for the purpose of making editorial changes or corrections in the Board's rules and regulations.

(e) Issue orders staying or declining to stay, pending judicial review, orders of the Board suspending or revoking certificates, and consent to the entry of judicial stays with respect to such orders.

(f) Compromise civil penalties in the case of violations arising under The Independent Safety Board Act of 1974, as amended, or any rule, regulation, or order issued thereunder.

(g) Issue orders dismissing appeals from initial decisions of Board administrative law judges pursuant to the request of the appellant or, where the request is consensual, at the request of any party.

(h) Correct Board orders by eliminating typographical, grammatical, and similar errors, and make editorial changes therein not involving matters of substance.

(i) Take such action as appropriate or necessary adequately to compromise, settle, or otherwise represent the Board's interest in judicial or administrative actions to which the Board is a party or in which the Board is interested.

(j) Dismiss late filed notices of appeal and appeal briefs for lack of good cause.

[60 FR 61489, Nov. 30, 1995, as amended at 63 FR 71606, Dec. 29, 1998]

§ 800.25 Delegation to the Directors of Office of Aviation Safety, Office of Railroad Safety, Office of Highway Safety, Office of Marine Safety, and Office of Pipeline and Hazardous Materials Safety.

The Board delegates to the Directors of the Offices of Aviation, Railroad, Highway, Marine, and Pipeline and Hazardous Materials Safety, the authority to:

(a) Order an investigation into the facts, conditions, and circumstances of accidents that the Board has authority to investigate.

(b) Disclose factual information pertinent to all accidents or incidents as provided for in Part 801 of this chapter.

(c) Determine the probable cause(s) of accidents in which the determination is issued in the ''Brief of Accident'' format, except that the Office Director will submit the findings of the accident investigation to the Board for determination of the probable cause(s) when (1) any Board Member so requests, (2) it appears to the Office Director that, because of significant public interest, a policy issue, or a safety issue of other matter, the determination of the probable cause(s) should be made by the Board, or (3) the accident investigation will be used to support findings in a special investigation or study. Provided, that a petition for reconsideration or modification of a determination of the probable cause(s) made under § 845.41 of this Chapter shall be acted on by the Board.

(d) Consistent with Board resources, investigate accidents as provided under § 304(a) of the Independent Safety Board Act of 1974, as amended (49 U.S.C. 1131(a)) and the Appendix to this Part.

[60 FR 61489, Nov. 30, 1995, as amended at 63 FR 71606, Dec. 29, 1998]

§ 800.26 Delegation to the Chief, Public Inquiries Branch.

The Board delegates to the Chief, Public Inquiries Branch, the authority to determine, initially, the withholding of a board record from inspection or copying, pursuant to part 801 of this chapter.

[63 FR 71606, Dec. 29, 1998]

§ 800.27 Delegation to investigative officers and employees of the Board.

The Board delegates to any officer or employee of the Board designated by the Chairman of the Safety Board the authority to sign and issue subpoenas, and administer oaths and affirmations, and to take depositions or cause them to be taken in connection with the investigation of transportation accidents or incidents.

[60 FR 61490, Nov. 30, 1995]

§ 800.28 Delegation to the Chief Financial Officer.

The Board delegates to the Chief Financial Officer the authority to settle claims for money damages of $2,500 or less against the United States arising under Section 2672 of 28 United States Code (the Federal Tort Claims Act) because of acts or omissions of Board employees.

[63 FR 71606, Dec. 29, 1998]

APPENDIX TO PART 800—REQUEST TO THE SECRETARY OF THE DEPARTMENT OF TRANSPORTATION TO INVESTIGATE CERTAIN AIRCRAFT ACCIDENTS

(a) Acting pursuant to the authority vested in it by Title VII of the Federal Aviation Act of 1958 (49 U.S.C. 1441) and section 304(a)(1) of the Independent Safety Board Act of 1974, the National Transportation Safety Board (Board) hereby requests the Secretary of the Department of Transportation (Secretary) to exercise his authority subject to the terms, conditions, and limitations of Title VII and section 304(a)(1) of the Independent Safety Board Act of 1974, and as set forth below to investigate the facts, conditions, and circumstances surrounding certain fixed-wing and rotorcraft aircraft accidents and to submit a report to the Board from which the Board may make a determination of the probable cause.

(b) The authority to be exercised hereunder shall include the investigation of all civil aircraft accidents involving rotorcraft, aerial application, amateur-built aircraft, restricted category aircraft, and all fixed-wing aircraft which have a certificated maximum gross takeoff weight of 12,500 pounds or less except:

(1) Accidents in which fatal injuries have occurred to an occupant of such aircraft, but shall include accidents involving fatalities incurred as a result of aerial application operations, amateur-built aircraft operations, or restricted category aircraft operations.

(2) Accidents involving aircraft operated in accordance with the provisions of Part 135 of the Federal Air Regulations entitled ''Air Taxi Operators and Commercial Operators of Small Aircraft.''

(3) Accidents involving aircraft operated by an air carrier authorized by certificate of public convenience and necessity to engage in air transportation.

(4) Accidents involving midair collisions.

(c) *Provided,* That the Board may, through the chiefs of its field offices, or their designees who receive the initial notifications, advise the Secretary, through his appropriate designee, that the Board will assume the full responsibility for the investigation of an accident included in this request in the same manner as an accident not so included; and *Provided further,* That the Board, through the chiefs of its field offices, or their designees who receive initial notifications may request the Secretary, through his appropriate designee, to investigate an accident not included in this request, which would normally be investigated by the Board under section (b) (1) through (4) above, and in the same manner as an accident so included.

(d) *Provided,* That this authority shall not be construed to authorize the Secretary to hold public hearings or to determine the probable cause of the accident; and *Provided further,* That the Secretary will report to the Board in a form acceptable to the Board the facts, conditions, and circumstances surrounding each accident from which the Board may determine the probable cause.

(e) *And provided further,* That this request includes authority to conduct autopsies and such other tests of the remains of deceased persons aboard the aircraft at the time of the accident, who die as a result of the accident, necessary to the investigations requested hereunder and such authority may be delegated and redelegated to any official or employee of the Federal Aviation Administration (FAA). For the purpose of this provision, designated aviation examiners are not deemed to be officials or employees of the FAA.

(f) Invoking the provisions of section 701(f) of the Federal Aviation Act of 1958, and section 304(a)(1) of the Independent Safety Board Act of 1974, is necessary inasmuch as sufficient funds have not been made available to the Board to provide adequate facilities and personnel to investigate all accidents involving civil aircraft. This request, therefore, is considered to be temporary in nature and may be modified or terminated by written notice to the Secretary.

[49 FR 26232, June 27, 1984, as amended at 63 FR 71606, Dec. 29, 1998]

PART 801—PUBLIC AVAILABILITY OF INFORMATION

Subpart A—Applicability and Policy

Sec.
801.1 Applicability.
801.2 Policy.
801.3 Definitions.

Subpart B—Administration

801.10 General.
801.11 Segregability of records.
801.12 Protection of records.

Subpart C—Time Limits

801.20 Initial determination.
801.21 Final determination.
801.22 Extension.

Subpart D—Accident Investigation Records

801.30 Field aircraft accident investigations.
801.31 Major aircraft accident investigations.
801.32 Aircraft accident public hearings.
801.33 Surface transportation accident investigations.
801.34 Surface accident public hearings.
801.35 Aviation accident reports.
801.36 Surface transportation accident reports.

Subpart E—Other Board Documents

801.40 The Board's rules.
801.41 Transportation safety recommendations.
801.42 Indexes to aviation and maritime enforcement cases.
801.43 Administrative staff manuals and instructions and indexes that affect the public.
801.44 Reports to Congress.
801.45 Other records.
801.46 Special document services.

Subpart F—Exemption From Public Disclosure

801.50 General.
801.51 National defense and foreign policy secrets.
801.52 Internal personnel rules and practices of the Board.
801.53 Records exempt by statute from disclosure.
801.54 Interagency and intra-agency exchanges.
801.55 Unwarranted invasion of personal privacy.
801.56 Records compiled for law enforcement purposes.
801.57 Records for regulation of financial institutions.
801.58 Geological records.
801.59 Trade secrets and commercial or financial information.

APPENDIX TO PART 801—FEE SCHEDULE

AUTHORITY: 5 U.S.C. 552; 49 U.S.C. 1101 et seq.; 18 U.S.C. 641 and 2071.

SOURCE: 41 FR 39755, Sept. 16, 1976, unless otherwise noted.

Subpart A—Applicability and Policy

§801.1 Applicability.

(a) This part implements the provisions of the Freedom of Information Act (5 U.S.C. 552) as amended by Pub. L. 93–502, November 21, 1974, and the publication and public access requirements embodied in title III of the Independent Safety Board Act of 1974 (88 Stat. 2166 (49 U.S.C. 1901 et seq.)). In addition, it provides for document services and the charges therefor, pursuant to 31 U.S.C. 483a.

(b) This part applies only to records existing when the request for the information is made. The National Transportation Safety Board (Board) is not required to compile or procure records for the sole purpose of making them available hereunder.

(c) Subpart F of this part describes records which are exempt from public disclosure.

§801.2 Policy.

In implementing 5 U.S.C. 552, it is the policy of the Board to make information available to the public to the greatest extent possible. Accordingly, all records of the Board, except those that the Board specifically determines must not be disclosed in the national interest, or for the protection of private rights, or for the efficient conduct of public business to the extent permitted by the Freedom of Information Act, are declared to be available for public inspection and copying, as provided in this part. Records are to be made available to the public promptly and to the fullest extent consistent with this policy. No record may be withheld from the public solely because its release might indicate administrative error or embarrass an officer or employee of the Board.

§ 801.3 Definitions.

Record includes any writing, drawing, map, recording, tape, film, photo, or other documentary material by which information is preserved, and this definition also applies to section 306(a) of the Independent Safety Board Act of 1974, which requires public access to any information. In this part, *document* and *record* shall have the same meaning.

Chairman means the Chairman of the Board.

Managing Director means the Managing Director of the Board.

Subpart B—Administration

§ 801.10 General.

(a) The Director, Bureau of Administration, is responsible for the custody and control of all Board records required to be preserved under directives of the General Services Administration, issued pursuant to 44 U.S.C. 3102.

(b) The Director, Bureau of Administration, shall be solely responsible for the initial determination of whether to release records within the 10 working days' limit, or the extension specified in the Freedom of Information Act.

(c) The Public Inquiries Section, Bureau of Administration, shall:

(1) Maintain for public access and commercial reproduction all accident files containing aviation and surface investigator's reports, factual accident reports or group chairman reports, documentation and accident correspondence files, transcripts of public hearings, if any, and exhibits.

(2) Maintain a public reference room (with self-service duplicator) and, on request, permit the public to inspect public documents during normal working hours.

(3) Maintain copies of public documents, specified in the appendix, for inspection and copying in the public reference room.

(d) Requests for documents must be addressed to the Public Inquiries Section, National Transportation Safety Board, Washington, DC 20594. All requests must reasonably identify the record requested, must be accompanied by the fee or agreement (if any) to pay the reproduction costs shown in the fee schedule (see appendix), and must contain the address and telephone number of the person making the request. The envelope in which the request is sent should be marked prominently with the letters ''FOIA.'' The Bureau of Administration, if there is a failure to comply fully, will attempt to contact the requester immediately to rectify the omission. However, the 10-working-day limit for processing shall not commence until the Bureau of Administration receives a totally correct request.

(e) The field offices of the Board shall not maintain, for public access, records maintained by the Bureau of Administration. If requests are made to field offices, advice will be promptly given as to how to make such requests.

(f) The Bureau of Administration shall maintain a contract with a commercial reproduction firm to accommodate requests for reproduction of accident records. The reproduction charges may be subject to change with each contract renewal.

(g) Requests for documents generated by other agencies or entities will not be processed unless they are contained in the Board's accident files.

(h) Requests for records not yet issued will be held in abeyance until issuance and then processed. The person making the request will be so notified.

(i) No charge will be made by the Board for notices, decisions, orders, etc., required by law to be served on a party to any proceeding or matter before the Board.

(j) Upon approval of the Director, Bureau of Administration, subscriptions to Board publications may be entered without charge for States, organizations, or other entities specified in the fee schedule set forth in the appendix.

§ 801.11 Segregability of records.

The initial decision of the Director, Bureau of Administration shall include a determination of segregability. If it is reasonable to do so, the exempt portions will be deleted and the nonexempt portions will be sent to the requester.

§ 801.12 Protection of records.

(a) No person may, without permission, remove from the place where it is

made available any record made available to him for inspection or copying. Stealing, altering, multilating, obliterating, or destroying, in whole or in part, such a record shall be deemed a crime.

(b) Section 641 of title 18 of the U.S.C. provides, in pertinent part, as follows:

> ''Whoever * * * steals, purloins, or knowingly converts to his use or the use of another, or without authority, sells, conveys or disposes of any record * * * or thing of value of the United States or of any department or agency thereof * * * Shall be fined not more than $10,000 or imprisoned not more than ten years or both; but if the value of such property does not exceed the sum of $100, he shall be fined not more than $1,000 or imprisoned not more than one year, or both. * * *''

(c) Section 2071(a) of title 18 of the U.S.C. provides, in pertinent part, as follows:

> ''(a) Whoever willfully and unlawfully conceals, removes, mutilates, obliterates, or destroys, or attempts to do so, or, with intent to do so takes and carries away any record, proceeding, map, book, paper, document, or other things, filed or deposited * * * in any public office, or with any * * * public officer of the United States, shall be fined not more than $2,000 or imprisoned not more than three years, or both.''

Subpart C—Time Limits

§ 801.20 Initial determination.

An initial determination as to whether to release a record shall be made by the Director, Bureau of Administration within 10 working days (excluding Saturdays, Sundays, and legal public holidays) after the request is received, except that this time limit may be extended up to 10 additional working days in accordance with § 801.22, of this part. The person making the request will be notified immediately in writing of such determination. If such determination is to release the requested record, such record shall be made available promptly. If such determination is made not to release the record, the person making the request shall, when he is notified of such determination, be advised of (a) the reason for the determination, (b) the right to appeal the determination, and (c) the name and title or positions of each person responsible for the denial of the request.

§ 801.21 Final determination.

A determination with respect to any appeal made pursuant to § 801.20, shall be made by the Managing Director within 10 working days (excluding Saturdays, Sundays, and legal public holidays) after receipt of such appeal, except that this time limit may be extended for as many as 10 additional working days, in accordance with § 801.22.

§ 801.22 Extension.

In unusual circumstances as specified in this section, the time limits prescribed in either, but not both, § 801.20 or § 801.21, may be extended by written notice to the person making a request and setting forth the reasons for such extension and the date on which a determination is expected to be dispatched. Such notice shall not specify a date that would result in an extension for more than 10 working days. As used in this paragraph, ''unusual circumstances,'' to the extent reasonably necessary to the proper processing of the particular request, means—

(a) The need to search for and collect the requested records from field facilities or other establishments that are separate from the Bureau of Administration;

(b) The need to search for, collect, and appropriately examine a voluminous amount of separate and distinct records which are demanded in a single request; or

(c) The need to consult with another agency which has a substantial interest in the disposition of the request or with two or more components of the agency having substantial subject-matter interest therein.

Subpart D—Accident Investigation Records

§ 801.30 Field aircraft accident investigations.

Upon completion of the field investigation (normally 60 days after the accident), the Board's investigator-in-charge shall complete a factual report (with documentation) and send it to the Director, Bureau of Administration, who shall then make the record available to the public for inspection

or commercial copy order (see appendix).

§ 801.31 Major aircraft accident investigations.

Upon completion of the investigation by a team of Board investigators (normally 60 days after the accident), the report of each investigator (group chairman), with documentation, shall be sent to the Director, Bureau of Administration, who shall make these records available to the public for inspection and commercial copy order (see appendix).

§ 801.32 Aircraft accident public hearings.

Within approximately 2 weeks after a public hearing concerning an aviation accident, the Director, Bureau of Administration, shall make available to the public for inspection or commercial copy order, the hearing transcript and the exhibits introduced at the hearing (see appendix).

§ 801.33 Surface transportation accident investigations.

Upon completion of the Board's investigation of these accidents (normally 60 days after the accident), the investigators shall send to the Director, Bureau of Administration, a file of the documentation obtained. This file shall then be made available by the Bureau of Administration, for public access or commercial copy order (see appendix).

§ 801.34 Surface accident public hearings.

Within approximately 2 weeks after a surface accident public hearing, the Bureau of Administration shall make available for public inspection and commercial copy order, the hearing transcript and exhibits introduced at the hearing.

§ 801.35 Aviation accident reports.

(a) The Board shall report the facts, conditions, and circumstances, and its determination of the cause or probable cause of all U.S. civil aviation accidents approximately 6 months after each accident occurs. All such reports shall be provided by computer printout, published periodically as ''Briefs of Accidents.''

(b) All major or catastropic air carrier accidents and noncatastrophic accidents, involving both air carriers and general aviation, which provide unusually significant safety issues shall be reported by the Board in detailed, narrative format. The formal, narrative report shall provide the facts, conditions, and circumstances, and the Board's determination of the cause or probable cause of the accident; the report shall be issued approximately 6 months after date of accident.

(c) After notice of issuance appears in the FEDERAL REGISTER, as required by section 304(a)(2) of the Independent Safety Board Act of 1974, the report shall be made available for public inspection in the Board's public reference room. (See appendix for copies and subscriptions.)

§ 801.36 Surface transportation accident reports.

Any surface transportation accident investigated by the Board, and certain marine accidents investigated by the U.S. Coast Guard, shall result in a formal Board report. Such report shall provide the facts, conditions, circumstances, and the Board's determination of cause or probable cause of the accident. Reports of accidents investigated by the Board shall be issued approximately 6 months after the date of accident. After notice of issuance appears in the FEDERAL REGISTER, as required by section 304 (a)(2) of the Independent Safety Board Act of 1974, the report shall be made available for public inspection in the Board's public reference room. (See appendix for copies and subscriptions.)

Subpart E—Other Board Documents

§ 801.40 The Board's rules.

The Board's rules are published in the Code of Federal Regulations as parts 800 through 899 of this title 49. Reprints of each part are maintained by the Bureau of Administration and are available on request without cost.

§ 801.41 Transportation safety recommendations.

All transportation safety recommendations issued by the Board, and responses thereto, shall be noticed in the FEDERAL REGISTER as required by section 307 of the Independent Safety Board Act of 1974, and thereafter shall be made available for inspection or copying in the Board's public reference room. (See appendix for copies and subscriptions.)

§ 801.42 Indexes to aviation and maritime enforcement cases.

(a) Pursuant to the Freedom of Information Act, as amended, a quarterly index to the initial decisions of the Board's administrative law judges shall be made available for inspection or copying in the Board's public reference room. (See appendix for subscription to initial decisions.)

(b) Pursuant to the Freedom of Information Act, as amended, a quarterly index to the Board's opinions and orders in aviation and maritime safety enforcement cases shall be made available for inspection or copying in the Board's public reference room. (See appendix for subscription to opinions and orders and availability of bound National Transportation Safety Board Decisions.)

§ 801.43 Administrative staff manuals and instructions and indexes that affect the public.

The index to staff manuals which are not exempt from public disclosure, as set forth in Subpart F, shall be available in the Board's public reference room (see appendix).

§ 801.44 Reports to Congress.

The Board's annual report to Congress, which is required under section 305 of the Independent Safety Board Act of 1974, shall be submitted on July 1 of each year. It may be purchased from the Government Printing Office or inspected in the Board's public reference room. All other reports or comments to Congress shall be available in the Board's public reference room for inspection or by ordering a copy after issuance.

§ 801.45 Other records.

The working files of the Board contain a limited number of records which may not be exempt, in whole or in part, from public disclosure as set forth in Subpart F of this part. Such records shall be made available upon request. Requests for such documents should be made directly to the head of the unit concerned, as set forth in § 801.10(j), and should contain a reasonable description of the specific record desired.

§ 801.46 Special document services.

(a) Although not required by the Freedom of Information Act, the Board provides document services at charges required by 31 U.S.C. 483a, as described in the appendix.

Subpart F—Exemption From Public Disclosure

§ 801.50 General.

This subpart implements section 552 (b) of title 5, United States Code. Section 552 (a) and (b) exempt certain records from public inspection. The Board will, however, release a record authorized to be withheld under section 552(b) unless it determines that the release of that record would be inconsistent with the purpose of the exemption concerned. Examples of records given in §§ 801.51 through 801.58 included within a particular statutory exemption are not necessarily illustrative of all types of records covered by the exemption.

§ 801.51 National defense and foreign policy secrets.

National defense and foreign policy secrets established by Executive Order, and properly classified, are exempt from public disclosure. Requests to the Board for such records will be transferred to the source agency as appropriate. (Executive Orders 11652, March 8, 1972; 10865, February 20, 1960; and 10104, February 1, 1950.)

§ 801.52 Internal personnel rules and practices of the Board.

(a) Records relating solely to internal personnel rules and practices that are within the statutory exemptions

include memoranda pertaining to personnel matters such as staffing policies, and procedures for the hiring, training, promotion, demotion, or discharge of employees, and management plans, records, or proposals relating to labor-management relations.

(b) The purpose of this section is to protect any records relating to internal personnel rules and practices dealing with the relations between Board management and employees.

§ 801.53 Records exempt by statute from disclosure.

This exemption applies to records specifically exempted from disclosure by statute (other than 5 U.S.C. 552b): *Provided*, That such statute (a) requires that the matters be withheld from the public in such manner as to leave no discretion on the issue, or (b) establishes particular criteria for withholding or refers to particular types of matters to be withheld.

(Authority: 5 U.S.C. 552b)

[42 FR 13284, Mar. 10, 1977]

§ 801.54 Interagency and intra-agency exchanges.

(a) Any record prepared by a Board employee for internal Government use is within the statutory exemption to the extent that it contains—

(1) Opinions made in the course of developing official action by the Board but not actually made a part of that official action, or

(2) Information concerning any pending Board proceeding, or similar matter, including any claim or other dispute to be resolved before a court of law, administrative board, hearing officer, or contracting officer.

(b) The purpose of this section is to protect the full and frank exchange of ideas, views, and opinions necessary for the effective functioning of the Government. These resources must be fully and readily available to those officials upon whom the responsibility rests to take official Board action. Its purpose is also to protect against the premature disclosure of material that is in the developmental stage, if premature disclosure would be detrimental to the authorized and appropriate purposes for which the material is being used, or if, because of its tentative nature, the material is likely to be revised or modified before it is officially presented to the public.

(c) Examples of materials covered by this section include staff papers containing advice, opinions, or suggestions preliminary to a decision or action; advance information on such things as proposed plans to procure, lease, or otherwise hire and dispose of materials, real estate, or facilities; documents exchanged preparatory to anticipated legal proceedings; material intended for public release at a specified future time, if premature disclosure would be detrimental to orderly processes of the Board; records of inspections, investigations, and surveys pertaining to internal management of the Board; and matters that would not be routinely disclosed in litigation but which are likely to be the subject of litigation.

§ 801.55 Unwarranted invasion of personal privacy.

Any personal, medical, or similar file is within the statutory exemption if its disclosure would harm the individual concerned or would be a clearly unwarranted invasion of his personal privacy. This also applies to financial statements furnished by Board Members and employees and to commercial or financial information customarily subjected to an attorney-client or similar privilege.

§ 801.56 Records compiled for law enforcement purposes.

This exemption from public disclosure applies to records compiled for law enforcement, but only to the extent that disclosure would interfere with enforcement, would be an unwarranted invasion of privacy, would disclose the identity of a confidential source, would disclose investigative procedures and practices, or would endanger the life or security of law enforcement personnel.

§ 801.57 Records for regulation of financial institutions.

Records compiled for agencies regulating or supervising financial institutions are exempt from public disclosure.

§ 801.58 Geological records.

Records concerning geological wells are exempt from public disclosure.

§ 801.59 Trade secrets and commercial or financial information.

Trade secrets and commercial or financial information obtained from a person and privileged or confidential are exempt from public disclosure.

[42 FR 13284, Mar. 10, 1977]

APPENDIX TO PART 801—FEE SCHEDULE

1. Fees (pursuant to 31 U.S.C. 483a). Upon request, services relating to public documents are available at the following fees:

A. Publications

(1) The response to public requests for the following NTSB publications are handled by the National Technical Information Service (NTIS). The following publications are available through single copies or annual subscriptions and may be purchased in paper copy or 98 page per film microfiche (fees are subject to change by NTIS):

	Single copies	Calendar year subscription	Microfiche
PB84–910400 Aircraft Accident Reports	$5.00	$55.00	(1)
PB84–916200 Highway Accident Reports	(1)	50.00	(1)
PB84–916300 Railroad Accident Reports	(1)	55.00	(1)
PB84–916400 Marine Accident Reports	(1)	60.00	(1)
PB84–916500 Pipeline Accident Reports	(1)	45.00	(1)
PB84–916900 Aviation Accident Briefs	(1)	160.00	(1)
PB84–917100 Highway Accident Briefs	12.50	(2)	(1)
PB84–917200 Railroad Accident Briefs	12.50	(2)	(1)
PB84–917300 Marine Accident Briefs	10.00	(2)	(1)
PB84–917400 Pipeline Accident Briefs	10.00	(2)	(1)
PB84–916600 Transportation Safety Recommendations	(1)	55.00	(1)
PB84–916700 Transportation Initial Decisions and Orders and Board Opinions & Orders	(1)	200.00	(1)
PB84–917000 Transportation Special Reports [3]	(1)	50.00	(1)

[1] Variable prices based on number of pages; contact NTIS for price quote.

[2] Highway, Railroad, Marine and Pipeline brief subscriptions are available by standing order only and require an NTIS deposit account (they are issued at irregular intervals, and charges at single copy rates will be made only as reports are distributed).

[3] Transportation Special Reports [this category includes all forms of Safety Studies (formerly titled Special Studies, and Safety Effectiveness Evaluations), Special Investigation Reports, and Railroad/Highway Accident Reports].

(2) Send publication orders for the above documents to the National Technical Information Service, 5285 Port Royal Road, Springfield, Virginia 22161, identifying each subscription by the NTSB Report Number or the NTIS accession number. Telephone (703) 487–4630 (annual subscriptions) or (703) 487–4650 (single copies or microfiche). The NTSB Report Number and the NTIS accession number can be obtained from the NTSB Public Inquiries Section.

B. Access to transportation accident files (all modes). All files dated prior to January 1, 1978, are in hard copy form and are maintained in the Federal Records Center. Files dated January 1, 1978, to present are maintained in microfiche at the NTSB headquarters. All documents in the Board's public files may be examined, without charge, in the Board's public reference room, located in the Public Inquiries Section, Room 805F, 800 Independence Avenue, SW., Washington, DC, telephone (202) 382–6735. A self-service duplicator in the reference room is available for use by the public at a nominal cost. Usually, two weeks' time is required to service a request for reproduction. Filling any request for reproduction of a file that must be retrieved from the Federal Records Center will require two additional weeks.

(1) Availability of accident files. All transportation mode accident files are retained in accordance with the following schedule:

a. Air carrier accident files and all public hearing files are retained for a period of fifteen (15) years and then destroyed.

b. All other transportation accident files are retained for a period of seven (7) years and then destroyed.

(2) Reproduction of accident files. Reproduction of accident files (statements, photographs, hearing transcripts, and other material contained in the Board's accident investigation files) is provided by commercial contractor. Reproduction of printed matter and photographs are made from the best copy available. Requests must be forwarded to the Public Inquiries Section, National Transportation Safety Board, Washington, DC 20594. The contractor may bill and/or require full payment before duplicating the requested documents. Fees are subject to change depending upon the terms of the Board's annual contract.

Current fees are:

a. Microfiche Duplicate, $1.65
b. Microfiche Blowback, .11
c. Aperture Card Blowback, 1.40
d. Photographs (from aperture card):
8″x10″ B&W Glossy Print, 1.65
8″x10″ Color Prints, 2.75
5″x7″ Color Prints, 2.47
3½″x5″ Color Prints, 2.47

e. Hardcopy Reproduction:
8½″x11″ .14
8½″x14″ .10
10″x14″ .05
Oversized Pages (Larger than 10″x14″), .03/sq. in.
f. Photographs (from prints):
8″x10″ B&W Glossy Prints, 1.65
8″x10″ Color Prints, 2.75
5″x7″ Color Prints, 2.47
3½″x5″ Color Prints, 2.47
2″x2″ Color Slides, 2.47
g. Minimum Order Complete File, 1.00
h. Preliminary Report (only), 1.35
i. Probable Cause (only), 1.35

C. Request for other Board information. Requests for any other Board information such as files on safety recommendations, safety studies, Board orders, Board opinions and orders, and initial decisions are available at a cost of 14 cents per page(s) ($1.00 minimum charge). These services are provided by a public contractor who may prebill or require full payment before duplicating the requested documents. Requests must be forwarded to the Public Inquiries Section, National Transportation Safety Board, Washington, DC 20594.

D. Reproduction services through the commercial contractor are handled as follows:

Step 1: Requestor places written or telephone order with the Board's Public Inquiries Section for desired documents.

Step 2: The Public Inquiries Section identifies the documents and forwards the request to the contractor.

Step 3: The contractor provides the requestor with an invoice showing the actual costs for the service requested plus postage.

Step 4: Requestor returns a copy of the contractor's invoice with full payment enclosed. Requestor has the option of opening a charge account with the contractor, and contractor will accept major credit cards. (Contractor must respond to request within five working days after receipt of payment.)

Step 5: Contractor reproduces documents and mails them directly to the requestor.

E. Expedited service. A $2.25 surcharge will be made for expedited service which will be provided within 2 working days commencing when the contractor receives advance payment or other arrangements have been made with the contractor.

F. A fee of $4.00 will be charged for certification of documents under the Board's seal.

G. Computer tapes and services for aviation accidents. The duplication of computer tapes (or a portion thereof) will be made on requestor supplied magnetic tape for a fee of $40.00. The requestor must provide a 2,400-foot magnetic tape certified to at least 1,600 bits per inch. Computer tape requests should be addressed to the Public Inquiries Section, National Transportation Safety Board, Washington, DC 20594.

H. The basic fees set forth provide for ordinary first-class postage prepaid. If registered, certified, air, or special delivery mail is requested, postal fees therefor will be added to the basic fee. Also, if special handling or packaging is required, the cost will be added to the basic fee.

2. Services available free of charge.

A. The following documents are available without commercial reproduction cost until limited supplies are exhausted:

(1) Press releases,
(2) Safety Board regulations (chapter VIII of title 49, Code of Federal Regulations),
(3) Indexes to initial decisions, Board orders, opinion and orders, and staff manuals and instructions,
(4) Safety recommendations, and
(5) NTSB Annual Report.

B. NTSB News Digest. The News Digest describes NTSB activities and summarizes certain publications. The News Digest is free, and anyone who is interested in being added to this mailing list should contact the Public Inquiries Section, National Transportation Safety Board, Washington, DC 20594.

3. Documents search fee—The Board has determined that it is in the public interest to eliminate fees for the first hour of search time. For all time expended in locating documents beyond the initial hour, the fee is $5.00 per hour.

4. Publication, reproduction, and search fees are waived for qualifying foreign countries, international organizations, nonprofit public safety entities, State and Federal transportation agencies, and colleges and universities, after approval by the Director, Bureau of Administration. In addition, fees may be waived or reduced for other requestors not in any of the foregoing categories, when it is determined by the Director, Bureau of Administration that a waiver is appropriate and would contribute to the Board's programs.

(5 U.S.C. 552, 31 U.S.C. 483a, and 49 U.S.C. 1901 et seq.)

[49 FR 4496, Feb. 7, 1984]

PART 802—RULES IMPLEMENTING THE PRIVACY ACT OF 1974

Subpart A—Applicability and Policy

Sec.
802.1 Purpose and scope.
802.2 Definitions.

Subpart B—Initial Procedures and Requirements

802.5 Procedures for requests pertaining to individual records in a record system.

802.6 Types of requests and specification of records.
802.7 Requests: How, where, and when presented; verification of identity of individuals making requests; accompanying persons; and procedures for acknowledgement of requests.

Subpart C—Initial Determinations

802.8 Disclosure of requested information.

Subpart D—Correction or Amending the Record

802.10 Request for correction or amendment to record.
802.11 Agency review of requests for correction or amendment of record.
802.12 Initial adverse agency determination on correction or amendment.

Subpart E—Review of Initial Adverse Determination

802.14 Review procedure and judicial review.

Subpart F—Fees

802.15 Fees.

Subpart G—Penalties

802.18 Penalties.

Subpart H—Specific Exemptions

802.20 Security records.

AUTHORITY: Privacy Act of 1974, Pub. L. 93–579, 88 Stat. 1896 (5 U.S.C. 552a); Independent Safety Board Act of 1974, Pub. L. 93–633, 88 Stat. 2166 (49 U.S.C. 1901 et seq.); and Freedom of Information Act, Pub. L. 93–502, November 21, 1974, amending 5 U.S.C. 552.

SOURCE: 41 FR 22358, June 3, 1976, unless otherwise noted.

Subpart A—Applicability and Policy

§ 802.1 Purpose and scope.

The purpose of this part is to implement the provisions of 5 U.S.C. 552a with respect to the availability to an individual of records of the National Transportation Safety Board (NTSB) maintained on individuals. NTSB policy encompasses the safeguarding of individual privacy from any misuse of Federal records and the provision of access to individuals to NTSB records concerning them, except where such access is in conflict with the Freedom of Information Act, or other statute.

[41 FR 39758, Sept. 16, 1976]

§ 802.2 Definitions.

In this part:

Board means the five Members of the National Transportation Safety Board, or a quorum thereof;

Individual means a citizen of the United States or an alien lawfully admitted for permanent residence;

National Transportation Safety Board (NTSB) means the agency set up under the Independent Safety Board Act of 1974;

Record means any item, collection, or grouping of information about an individual that is maintained under the control of the NTSB pursuant to Federal law or in connection with the transaction of public business, including, but not limited to, education, financial transactions, medical history, and criminal or employment history, and that contains a name, or an identifying number, symbol, or other identifying particular assigned to an individual, such as a finger or voice imprint or photograph;

Routine use means the use of such record for a purpose compatible with the purpose for which it was collected, including, but not limited to, referral to law enforcement agencies of violations of the law and for discovery purposes ordered by a court referral to potential employers, and for security clearance;

Statistical record means a record in a system of records maintained for statistical research or reporting purposes only and which is not used wholly or partially in any determination concerning an identifiable individual;

System Manager means the agency official who is responsible for the policies and practices of his particular system or systems of record, as specified in the NTSB notices of systems or records; and

System of records means a group of any records under the control of the NTSB from which information is retrieved by the name of an individual or by some identifying number, symbol, or other identifying particular assigned to the individual, whether presently in existence or set up in the future.

Subpart B—Initial Procedures and Requirements

§ 802.5 Procedures for requests pertaining to individual records in a record system.

The NTSB may not disclose any record to any person or other agency, except pursuant to a written request by, or with the prior written consent of, the individual to whom the record pertains, provided the record under the control of the NTSB is maintained in a system of records from which information is retrieved by the name of the individual or by some identifying number, symbol, or other particular assigned to such individual. Written consent is not required if the disclosure is:

(a) To officers or employees of the NTSB who require the information in the official performance of their duties;

(b) Required under 5 U.S.C. 552, Freedom of Information Act;

(c) For a routine use compatible with the purpose for which it was collected;

(d) To the Bureau of the Census for uses pursuant to title 13, U.S.C.;

(e) To a recipient who has provided the NTSB with advance adequate assurance that the record will be used solely as a statistical research or reporting record and that it is to be transferred in a form not individually identifiable; or

(f) Pursuant to the order of a court of competent jurisdiction.

§ 802.6 Types of requests and specification of records.

(a) *Types of requests.* An individual may make the following request respecting records about himself maintained by NTSB in any system of records subject to the Act:

(1) Whether information concerning himself is contained in any system of records.

(2) Access to a record concerning himself. Such request may include a request to review the record and/or obtain a copy of all or any portion thereof.

(3) Correction or amendment of a record concerning himself.

(4) Accounting of disclosure to any other person or Government agency of any record concerning himself contained in any system of records controlled by NTSB, except: (i) Disclosures made pursuant to the FOIA; (ii) disclosures made within the NTSB; (iii) disclosures made to another Government agency or instrumentality for an authorized law enforcement activity pursuant to subsection (b)(7) of the Act; and (iv) disclosures expressly exempted by NTSB from the requirements of subsection (c)(3) of the Act, pursuant to subsection (k) thereof.

(b) *Specification of records.* All requests for access to records must reasonably describe the system of records and the individual's record within the system of records in sufficient detail to permit identification of the requested record. Specific information regarding the system name, the individual's full name, and other information helpful in identifying the record or records shall be included. Requests for correction or amendment of records shall, in addition, specify the particular record involved, state the nature of the correction or amendment sought, and furnish justification for the correction or amendment.

(c) *Inadequate identification of record.* Requests which do not contain information sufficient to identify the record requested will be returned promptly to the requester, with a notice indicating what information is lacking. Individuals making requests in person will be informed of any deficiency in the specification of the records at the time the request is made. Individuals making requests in writing will be notified of any such deficiency when their request is acknowledged.

§ 802.7 Requests: How, where, and when presented; verification of identity of individuals making requests; accompanying persons; and procedures for acknowledgment of requests.

(a) *Requests—general.* Requests may be made in person or in writing. Assistance regarding requests or other matters relating to the Act may be obtained by writing to the Director, Bureau of Administration, National Transportation Safety Board, 800 Independence Avenue, SW., Washington, DC 20594. The Director, Bureau of Administration, or his designee, on request, will aid an individual in preparing an

amendment to the record or to an appeal following denial of a request to amend the record, pursuant to subsection (f)(4) of the Act.

(b) *Written requests.* Written requests shall be made to the Director, Bureau of Administration at the address given above, and shall clearly state on the envelope and on the request itself, ''Privacy Act Request,'' ''Privacy Act Statement of Disagreement,'' ''Privacy Act Disclosure Accounting Request,'' ''Appeal from Privacy Act Adverse Determination,'' or ''Privacy Act Correction Request,'' as the case may be. Actual receipt by the Director, Bureau of Administration, or his designee, shall constitute receipt.

(c) *Requests made in person.* Requests may be made in person during official working hours of the NTSB at the office where the record is located, as listed in the ''Notice of Systems of Records'' for the system in which the record is contained.

(d) *Verification of identity of requester.* (1) For written requests, the requester's identity must be verified before the release of any record, unless exempted under the FOIA. This may be accomplished by adequate proof of identity in the form of a driver's license or other acceptable item of the same type.

(2) For requests in person, the requester's identity may be established by a single document bearing a photograph (such as a passport or identification badge) or by two items of identification containing name, address, and signature (such as a driver's license or credit card).

(3) Where a request is made for reproduced records which are to be delivered by mail, the request must include a notarized statement verifying the requester's identity.

(e) *Inability to provide requisite documentation of identity.* A requester who cannot provide the necessary documentation of identity may provide a notarized statement, swearing or affirming his identity and the fact that he is aware of the penalties for false statement imposed pursuant to 18 U.S.C. 1001, and subsection (i)(3) of the Act. Where requested, the Director, Bureau of Administration, or his designee, will assist the requester in formulating the necessary document.

(f) *Accompanying persons.* A requester may wish to have a person of his choice accompany him to review the requested record. Prior to the release of the record, the NTSB will require the requester to furnish the Director, Bureau of Administration or his designee, with a written statement authorizing disclosure of the record in the accompanying person's presence.

(g) *Acknowledgment of requests.* Written requests to verify the existence of, to obtain access to, or to correct or amend records about the requester maintained by NTSB in any system of records subject to the Act, shall be acknowledged in writing by the Director, Bureau of Administration, or his designee, within 3 working days after the date of actual receipt of the request by the Director, Bureau of Administration, or his designee. The acknowledgment shall advise the requester of the need for any additional information to process the request. Wherever practicable, the acknowledgment shall notify the individual whether his request has been granted or denied. When a request is made in person, every effort will be made to determine immediately whether the request will be granted. If such decision cannot be made, the request will be processed in the same manner as a written request. Records will be made available for immediate inspection whenever possible.

[41 FR 22358, June 3, 1976, as amended at 41 FR 43154, Sept. 30, 1976]

Subpart C—Initial Determinations

§ 802.8 Disclosure of requested information.

(a) The System Manager may initially determine that the request be granted. If so, the individual making the request shall be notified orally, or in writing, and the notice shall include:

(1) A brief description of the information to be made available;

(2) The time and place where the record may be inspected, or alternatively, the procedure for delivery by mail to the requesting party;

(3) The estimated cost for furnishing copies of the record;

(4) The requirements for verification of identity;

(5) The requirements for authorizing discussion of the record in the presence of an accompanying person; and

(6) Any additional requirements needed to grant access to a specific system of records or record.

(b) Within 10 working days after actual receipt of the request by the Director, Bureau of Administration, or his designee, in appropriate cases, the requester will be informed:

(1) That the request does not reasonably describe the system of records or record sought to permit its identification, and shall set forth the additional information needed to clarify the request; or

(2) That the system of records identified does not include a record retrievable by the requester's name or other identifying particulars.

(c) The System Manager shall advise the requester within 10 working days after actual receipt of the request by the Director, Bureau of Administration, or his designee, that the request for access has been denied, and the reason for the denial, or that the determination has been made to grant the request, either in whole or in part, in which case the relevant information will be provided.

[41 FR 22358, June 3, 1976, as amended at 41 FR 43154, Sept. 30, 1976]

Subpart D—Correction or Amending the Record

§ 802.10 Request for correction or amendment to record.

All requests for correcting or amending records shall be made in writing to the Director, Bureau of Administration, National Transportation Safety Board, 800 Independence Avenue., SW., Washington, DC 20594, and shall be deemed received upon actual receipt by the Director, Bureau of Administration. The request shall clearly be marked on the envelope and in the letter with the legend that it is a ''Privacy Act Correction Request.'' The request must reasonably set forth the portion of the record which the individual contends is not accurate, relevant, timely, or complete.

[41 FR 22358, June 3, 1976, as amended at 41 FR 43154, Sept. 30, 1976]

§ 802.11 Agency review of requests for correction or amendment of record.

Within 10 working days after actual receipt of the request by the Director, Bureau of Administration, or his designee, to correct or amend the record, the System Manager shall either make the correction in whole or in part, or inform the individual of the refusal to correct or amend the record as requested, and shall present the reasons for any denials.

[41 FR 22358, June 3, 1976, as amended at 41 FR 43154, Sept. 30, 1976]

§ 802.12 Initial adverse agency determination on correction or amendment.

If the System Manager determines that the record should not be corrected or amended in whole or in part, he will forthwith make such finding in writing, after consulting with the General Counsel, or his designee. The requester shall be notified of the refusal to correct or amend the record. The notification shall be in writing, signed by the System Manager, and shall include—

(a) The reason for the denial;

(b) The name and title or position of each person responsible for the denial of the request;

(c) The appeal procedures for the individual for a review of the denial; and

(d) Notice that the denial from the System Manager is appealable within 30 days from the receipt thereof by the requester to the Board.

The System Manager is allotted 10 working days (or within such extended period as is provided in the section concerning ''unusual circumstances'' *infra*) to respond to the request for review. If the requester does not receive an answer within such time, the delay shall constitute a denial of the request and shall permit the requester immediately to appeal to the Board, or to a district court.

Subpart E—Review of Initial Adverse Determination

§ 802.14 Review procedure and judicial review.

(a) A requester may appeal from any adverse determination within 30 days after actual receipt of a denial from the System Manager. The appeal must be in writing addressed to the Chairman, National Transportation Safety Board, 800 Independence Avenue, SW., Washington, DC 20594, and shall contain a statement on the envelope and in the appeal: ''Appeal from Privacy Act Adverse Determination.''

(b) The Board shall make a determination with respect to the appeal within 30 working days after the actual receipt of the appeal by the Chairman, except as provided for in ''unusual circumstances'' infra.

(c)(1) *Review of denial of access*. If the appeal upholds the denial of access to records, the Board shall: Notify the requester in writing, explaining the Board's determination; state that the denial is a final agency action and that judicial review is available in a district court of the United States in the district where the requester resides or has his principal place of business, or where the agency records are located, or in the District of Columbia; and request a filing with the Board of a concise statement enumerating the reasons for the requester's disagreement with the denial, pursuant to subsection (g) of the Act.

(2) *Review of denial of correction or amendment*. If the appeal upholds the denial in whole or in part for correction or amendment of the record, the same notification and judicial review privileges described in paragraph (c)(1) of this section shall apply.

(d) If the denial is reversed on appeal, the Board shall notify the requester in writing of the reversal. The notice shall include a brief statement outlining those portions of the individual's record which were not accurate, relevant, timely, or complete, and corrections of the record which were made, and shall provide the individual with a courtesy copy of the corrected record.

(e) Copies of all appeals and written determinations will be furnished by the System Manager to the Board.

(f) In unusual circumstances, time limits may be extended by not more than 10 working days by written notice to the individual making the request. The notice shall include the reasons for the extension and the date on which a determination is expected to be forthcoming. ''Unusual circumstances'' as used in this section shall include circumstances where a search and collection of the requested records from field offices or other establishments are required, cases where a voluminous amount of data is involved, and cases where consultations are required with other agencies or with others having a substantial interest in the determination of the request.

(g) *Statements of Disagreement*. (1) Written Statements of Disagreement may be furnished by the individual within 30 working days of the date of actual receipt of the final adverse determination of the Board. They shall be addressed to the Director, Bureau of Administration, National Transportation Safety Board, 800 Independence Avenue, SW., Washington, DC 20594, and shall be clearly marked, both on the statement and on the envelope, ''Privacy Act Statement of Disagreement.''

(2) The Director, Bureau of Administration, or his designee, shall be responsible for ensuring that:

(i) The Statement of Disagreement is included in the system of records in which the disputed item of information is maintained; and

(ii) The original record is marked to indicate the information disputed, the existence of the Statement of Disagreement, and its location within the relevant system of records.

(3) The Director, Bureau of Administration, or his designee, may, if he deems it appropriate, prepare a concise Statement of Explanation indicating why the requested amendments or corrections were not made. Such Statement of Explanation shall be included in the system of records in the same manner as the Statement of Disagreement. Courtesy copies of the NTSB Statement of Explanation and the notation of dispute, as marked on the original record, shall be furnished to the individual who requested correction or amendment of the record.

(h) *Notices of correction and/or amendment, or dispute.* After a record has been corrected or a Statement of Disagreement has been filed, the Director, Bureau of Administration, or his designee, shall within 30 working days thereof, advise all previous recipients of the affected record as to the correction or the filing of the Statement of Disagreement. The identity of such recipients shall be determined pursuant to an accounting of disclosures required by the Act or any other accounting previously made. Any disclosure of disputed information occurring after a Statement of Disagreement has been filed shall clearly identify the specific information disputed and shall be accompanied by a copy of the Statement of Disagreement and a copy of any NTSB Statement of Explanation.

(i) *Disclosure to others of records concerning individuals.* Neither the Board nor other NTSB personnel shall disclose any record which is contained in a system of records maintained by NTSB, by any means of communication, including oral communication, to any person, or to another Government agency, except pursuant to a written request by, or with the prior written consent, of the individual to whom the record pertains, unless disclosure of the record is:

(1) To the Board and NTSB personnel who have a need for the record in the performance of their duties;

(2) Required under the FOIA;

(3) For a routine use published in the FEDERAL REGISTER;

(4) To the Bureau of the Census for purposes of planning or carrying out a census or survey, or related activity pursuant to the provisions of title 13 of the U.S.C.;

(5) To a recipient who has provided NTSB with adequate advance written assurance that the record will be used solely as a statistical research or reporting record and that the record is transferred in a form that is not identifiable with respect to individuals;[1]

(6) To the National Archives of the United States as a record which has sufficient historical or other value to warrant its continued preservation by the U.S. Government, or to the Administrator of the General Services Administration, or his designee, for evaluation to determine whether the record has such value;

(7) To another agency or to an instrumentality of any governmental jurisdiction within or under the control of the United States for a civil or criminal law enforcement activity if the activity is authorized by law, and if the head of the agency or instrumentality has made a written request to NTSB specifying the particular portion of the record desired and the law enforcement activity for which the record is sought;[2]

(8) To any person upon a showing of compelling circumstances affecting the health or safety of any individual;

(9) To either House of Congress or, to the extent of matter within its jurisdiction, to any committee, or subcommittee thereof, or to any joint committee of the Congress, or to any subcommittee of such joint committee;

(10) To the Comptroller General, or any of his authorized representatives, in the course of the performance of the duties of the General Accounting Office; or

(11) Pursuant to the order of a court of competent jurisdiction.

(j) *Notices of subpoenas.* When records concerning an individual are subpoenaed or otherwise disclosed pursuant to court order, the NTSB officer or employee served with the subpoena shall be responsible for assuring that the individual is notified of the disclosure within 5 days after such subpoena or other order becomes a matter of public record. The notice shall be mailed to

[1] The advance written statement of assurance shall state the purpose for which the record is requested and certify that it will be used only for statistical purposes. Prior to release under this paragraph, the record shall be stripped of all personally identifiable information and reviewed to ensure that the identity of any individual cannot reasonably be determined by combining two or more statistical records.

[2] A record may be disclosed to a law enforcement agency at the initiative of NTSB if criminal conduct is suspected, provided that such disclosure has been established as a routine use by publication in the FEDERAL REGISTER, and the instance of misconduct is directly related to the purpose for which the record is maintained.

the last known address of the individual and shall contain the following information: (1) The date the subpoena is returnable; (2) the court in which it is returnable; (3) the name and number of the case or proceeding; and (4) the nature of the information sought.

(k) *Notices of emergency disclosures.* When information concerning an individual has been disclosed to any person under compelling circumstances affecting health or safety, the NTSB officer or employee who made or authorized the disclosure shall notify the individual at his last known address within 5 days of the disclosure. The notice shall contain the following information: (1) The nature of the information disclosed; (2) the person or agency to whom the information was disclosed; (3) the date of the disclosure; and (4) the compelling circumstances justifying the disclosure.

[41 FR 22358, June 3, 1976, as amended at 41 FR 43154, Sept. 30, 1976]

Subpart F—Fees

§ 802.15 Fees.

No fees shall be charged for providing the first copy of a record, or any portion thereof, to individuals to whom the record pertains. The fee schedule for other records is the same as that appearing in the appendix to part 801 of this chapter, implementing the FOIA, as amended from time to time, except that the cost of any search for and review of the record shall not be included in any fee under this Act, pursuant to subsection (f)(5) of the Act.

Subpart G—Penalties

§ 802.18 Penalties.

(a) An individual may bring a civil action against the NTSB to correct or amend the record, or where there is a refusal to comply with an individual request or failure to maintain any record with accuracy, relevance, timeliness and completeness, so as to guarantee fairness, or failure to comply with any other provision of 5 U.S.C. 552a. The court may order the correction or amendment. It may assess against the United States reasonable attorney fees and other costs, or may enjoin the NTSB from withholding the records and order the production to the complainant, and it may assess attorney fees and costs.

(b) Where it is determined that the action was willful or intentional with respect to 5 U.S.C. 552(g)(1) (c) or (d), the United States shall be liable for the actual damages sustained, but in no case less than the sum of $1,000 and the costs of the action with attorney fees.

(c) Criminal penalties may be imposed against an officer or employee of the NTSB who fully discloses material which he knows is prohibited from disclosure, or who willfully maintains a system of records without meeting the notice requirements, or who knowingly and willfully requests or obtains any record concerning an individual from an agency under false pretenses. These offenses shall be misdemeanors with a fine not to exceed $5,000.

Subpart H—Specific Exemptions

§ 802.20 Security records.

Pursuant to, and limited by, 5 U.S.C. 552a(k)(5), the NTSB's system of records, which contains the Security Records of NTSB employees, prospective employees, and potential contractors, shall be exempt from disclosure of the material and the NTSB's handling thereof under subsections (d), (e)(1) and (e)(4) (H) and (I) of 5 U.S.C. 552a.

PART 803—OFFICIAL SEAL

Sec.
803.1 Description.
803.3 Authority to affix Seal.
803.5 Use of the Seal.

AUTHORITY: Sec. 303(c)(2), Independent Safety Board Act of 1974, Pub. L. 93–633, 88 Stat. 2168 (49 U.S.C. 1902(c)(2)).

§ 803.1 Description.

The official seal of the National Transportation Safety Board is described as follows: An American bald eagle with wings displayed, holding in his dexter (right) talon an olive branch and in his sinister (left) talon, a bundle of 13 arrows; above his head is a scroll inscribed ''E Pluribus Unum,'' bearing a shield with vertical stripes of alternating white and red, crowned by a field of blue, all within an encircling

inscription ''National Transportation Safety Board.'' When illustrated in color, the background is white. The wings, the body, and the upper portion of the legs of the eagle are shades of brown; the head, neck, and tail are white; the beak, feet, and lower portion of the legs are gold. The inscription on the scroll is black. The encircling inscription is the same shade of gold as the eagle's beak. The arrows and the olive branch are a lighter shade of gold. The red and blue of the shield are national flag red and blue. The official seal of the Board, in black and white, appears below:

[43 FR 36454, Aug. 17, 1978]

§ 803.3 Authority to affix Seal.

(a) The Seal shall be in the custody and control of the Director, Bureau of Administration of the Board.

(b) The Director, Bureau of Administration may delegate and authorize redelegations of this authority.

[40 FR 30238, July 17, 1975, as amended at 41 FR 39758, Sept. 16, 1976]

§ 803.5 Use of the Seal.

(a) The Seal is the official emblem of the Board and its use is therefore permitted only as provided in this part.

(b) Use by any person or organization outside of the Board may be made only with the Board's prior written approval.

(c) Requests by any person or organization outside of the Board for permission to use the Seal must be made in writing to Director, Bureau of Administration, National Transportation Safety Board, 800 Independence Avenue, SW., Washington, DC 20594. The request must specify in detail the exact use to be made. Any permission granted shall apply only to the specific use for which it was granted.

(d) Use of the Seal shall be essentially for informational purposes. The Seal may not be used on any article or in any manner which may discredit the Seal or reflect unfavorably upon the Board, or which implies Board endorsement of commercial products or services, or of the user's or users' policies or activities. Specifically, permission may not be granted under this section for nonofficial use—

(1) On souvenir or novelty items of an expendable nature;

(2) On toys, gifts, or premiums;

(3) As a letterhead design;

(4) On menus, matchbook covers, calendars, or similar items;

(5) To adorn civilian clothing; or

(6) On athletic clothing or equipment.

(e) Where necessary to avoid any prohibited implication or confusion as to the Board's association with the user or users, an appropriate legend will be prescribed by the Board for prominent display in connection with the permitted use.

(f) Falsely making, forging, counterfeiting, mutilating, or altering the Seal, or knowingly using or possessing with fraudulent intent any altered Seal is punishable under section 506 of Title 18, U.S.C.

[40 FR 30238, July 17, 1975, as amended at 41 FR 39758, Sept. 16, 1976]

PART 804—RULES IMPLEMENTING THE GOVERNMENT IN THE SUNSHINE ACT

Sec.

804.1 Applicability.
804.2 Policy.
804.3 Definitions.
804.4 Open meetings requirement.
804.5 Grounds on which meetings may be closed or information may be withheld.
804.6 Procedures for closing meetings, or withholding information, and requests by affected persons to close a meeting.
804.7 Procedures for public announcement of meetings.

804.8 Changes following public announcement.
804.9 Transcripts, recordings, or minutes of closed meetings.
804.10 Availability and retention of transcripts, recordings, and minutes, and applicable fees.

AUTHORITY: Government in the Sunshine Act, Pub. L. 94–409, 90 Stat. 1241 (5 U.S.C. 552b); Independent Safety Board Act of 1974, Pub. L. 93–633, 88 Stat. 2166 (49 U.S.C. 1901 et seq.).

SOURCE: 42 FR 13284, Mar. 10, 1977, unless otherwise noted.

§ 804.1 Applicability.

(a) This part implements the provisions of the Government in the Sunshine Act (5 U.S.C. 552b). These procedures apply to meetings, as defined herein, of the Members of the National Transportation Safety Board (NTSB).

(b) Requests for all documents other than the transcripts, recordings, and minutes described in § 804.9 shall continue to be governed by part 801 of the NTSB regulations (49 CFR part 801).

§ 804.2 Policy.

It is the policy of the NTSB to provide the public with the fullest practicable information regarding the decisionmaking processes of the Board, while protecting the rights of individuals and the ability of the Board to discharge its statutory functions and responsibilities. The public is invited to attend but not to participate in open meetings.

§ 804.3 Definitions.

As used in this part: *Meeting* means the deliberations of three or more Members where such deliberations determine or result in the joint conduct or disposition of official NTSB business, and includes conference telephone calls otherwise coming within the definition. A meeting does not include:

(a) Notation voting or similar consideration of business, whether by circulation of material to the Members individually in writing or by a polling of the Members individually by telephone.

(b) Deliberations by three or more Members (1) to open or to close a meeting or to release or to withhold information pursuant to § 804.6, (2) to call a meeting on less than seven days' notice as permitted by § 804.7(b), or (3) to change the subject matter or the determination to open or to close a publicly announced meeting under § 804.8(b).

(c) An internal session attended by three or more Members for which the sole purpose is to have the staff brief the Board concerning an accident, incident, or safety problem.

Member means an individual duly appointed and confirmed to the collegial body, known as ''the Board,'' which heads the NTSB.

National Transportation Safety Board (*NTSB*) means the agency set up under the Independent Safety Board Act of 1974.

[42 FR 13284, Mar. 10, 1977, as amended at 42 FR 31794, June 23, 1977]

§ 804.4 Open meetings requirement.

Members shall not jointly conduct or dispose of agency business other than in accordance with this part. Except as provided in § 804.5, every portion of every meeting of the Board shall be open to public observation.

§ 804.5 Grounds on which meetings may be closed or information may be withheld.

Except in a case where the Board finds that the public interest requires otherwise, a meeting may be closed and information pertinent to such meeting otherwise required by §§ 804.6, 804.7, and 804.8 to be disclosed to the public may be withheld if the Board properly determines that such meeting or portion thereof or the disclosure of such information is likely to:

(a) Disclose matters that are (1) specifically authorized under criteria established by an Executive Order to be kept secret in the interests of national defense or foreign policy, and (2) are in fact properly classified pursuant to such Executive Order;

(b) Relate solely to the internal personnel rules and practices of the NTSB;

(c) Disclose matters specifically exempted from disclosure by statute (other than 5 U.S.C. 552): *Provided*, That such statute (1) requires that the matters be withheld from the public in such a manner as to leave no discretion

on the issue, or (2) establishes particular criteria for withholding or refers to particular types of matters to be withheld;

(d) Disclose trade secrets and commercial or financial information obtained from a person and privileged or confidential;

(e) Involve accusing any person of a crime, or formally censuring any person;

(f) Disclose information of a personal nature where disclosure would constitute a clearly unwarranted invasion of personal privacy;

(g) Disclose investigatory records compiled for law enforcement purposes, or information which if written would be contained in such records, but only to the extent that the production of such records or information would:

(1) Interfere with enforcement proceedings;

(2) Deprive a person of a right to a fair trial or an impartial adjudication;

(3) Constitute an unwarranted invasion of personal privacy;

(4) Disclose the identity of a confidential source and, in the case of a record compiled by a criminal law enforcement authority in the course of a criminal investigation, or by an agency conducting a lawful national security intelligence investigation, confidential information furnished only by the confidential source;

(5) Disclose investigative techniques and procedures; or

(6) Endanger the life or physical safety of law enforcement personnel;

(h) Disclose information contained in or related to examination, operating, or condition reports prepared by, on behalf of, or for the use of an agency responsible for the regulation or supervision of financial institutions;

(i) Disclose information the premature disclosure of which would be likely to significantly frustrate implementation of a proposed action of the NTSB: *Provided*, That the NTSB has not already disclosed to the public the content or nature of its proposed action or is not required by law to make such disclosure on its own initiative prior to taking final action on such proposal; or

(j) Specifically concern the Board's issuance of a subpoena, or the NTSB's participation in a civil action or proceeding, an action in a foreign court or international tribunal, or an arbitration, or the initiation, conduct, or disposition by the NTSB of a particular case of formal agency adjudication pursuant to the procedures in 5 U.S.C. 554 or otherwise involving a determination on the record after opportunity for a hearing.

§ 804.6 Procedures for closing meetings, or withholding information, and requests by affected persons to close a meeting.

(a) A meeting shall not be closed, or information pertaining thereto withheld, unless a majority of all Members votes to take such action. A separate vote shall be taken with respect to any action under § 804.5. A single vote is permitted with respect to a series of meetings, a portion or portions of which are proposed to be closed to the public, or with respect to any information concerning such series of meetings, so long as each meeting in such series involves the same particular subject matters and is scheduled to be held no more than thirty days after the initial meeting in such series. Each Member's vote under this paragraph shall be recorded and proxies are not permitted.

(b) Any person whose interest may be directly affected if a portion of a meeting is open may request the Board to close that portion on any of the grounds referred to in § 804.5 (e), (f), or (g). Requests, with reasons in support thereof, should be submitted to the General Counsel, National Transportation Safety Board, 800 Independence Avenue, SW., Washington, DC 20594. On motion of any Member, the Board shall determine by recorded vote whether to grant the request.

(c) Within one working day of any vote taken pursuant to this section, the NTSB shall make available a written copy of such vote reflecting the vote of each Member on the question and, if a portion of a meeting is to be closed to the public a full written explanation of its action closing the meeting and a list of all persons expected to attend and their affiliation.

(d) Before every closed meeting, the General Counsel of the NTSB shall publicly certify that, in his or her opinion,

the meeting may be closed to the public and shall state each relevant exemptive provision. A copy of such certification, together with a statement of the presiding officer setting forth the time and place of the meeting and the persons present, shall be retained by the NTSB as part of the transcript, recording, or minutes required by § 804.9.

§ 804.7 Procedures for public announcement of meetings.

(a) For each meeting, the NTSB shall make public announcement, at least one week before the meeting, of the:

(1) Time of the meeting;

(2) Place of the meeting;

(3) Subject matter of the meeting;

(4) Whether the meeting is to be open or closed; and

(5) The name and business telephone number of the official designated by the NTSB to respond to requests for information about the meeting.

(b) The one week advance notice required by paragraph (a) of this section may be reduced only if:

(1) A majority of all Members determines by recorded vote that NTSB business requires that such meeting be scheduled in less than seven days; and

(2) The public announcement required by paragraph (a) of this section be made at the earliest practicable time.

(c) Immediately following each public announcement required by this section, or by § 804.8, the NTSB shall submit a notice of public announcement for publication in the FEDERAL REGISTER.

§ 804.8 Changes following public announcement.

(a) The time or place of a meeting may be changed following the public announcement only if the NTSB publicly announces such change at the earliest practicable time. Members need not approve such change.

(b) The subject matter of a meeting or the determination of the Board to open or to close a meeting, or a portion thereof, to the public may be changed following public announcement only if:

(1) A majority of all Members determines by recorded vote that NTSB business so requires and that no earlier announcement of the change was possible; and

(2) The NTSB publicly announces such change and the vote of each Member thereon at the earliest practicable time.

§ 804.9 Transcripts, recordings, or minutes of closed meetings.

Along with the General Counsel's certification and presiding officer's statement referred to in § 804.6(d), the NTSB shall maintain a complete transcript of electronic recording adequate to record fully the proceedings of each meeting, or a portion thereof, closed to the public. The NTSB may maintain a set of minutes in lieu of such transcript or recording for meetings closed pursuant to § 804.5 (h) or (j). Such minutes shall fully and clearly describe all matters discussed and shall provide a full and accurate summary of any actions taken, and the reasons therefor, including a description of each of the views expressed on any item and the record of any rollcall vote. All documents considered in connection with any actions shall be identified in such minutes.

§ 804.10 Availability and retention of transcripts, recordings, and minutes, and applicable fees.

The NTSB shall make promptly available to the public the transcript, electronic recording, or minutes of the discussion of any item on the agenda or of any testimony received at the meeting, except for such item, or items, of discussion or testimony as determined by the NTSB to contain matters which may be withheld under the exemptive provisions of § 804.5. Copies of the nonexempt portions of the transcript or minutes, or transcription of such recordings disclosing the identity of each speaker, shall be furnished to any person at the actual cost of transcription or duplication. the NTSB shall maintain a complete verbatim copy of the transcript, a complete copy of the minutes, or a complete electronic recording of each meeting, or a portion thereof, closed to the public for at least two years after such meeting, or until one year after the conclusion of any NTSB proceeding with respect to which the

meeting, or a portion thereof, was held, whichever occurs later.

PART 805—EMPLOYEE RESPONSIBILITIES AND CONDUCT

Sec.
805.735–1 Purpose.
805.735–2 Definitions.
805.735–3 Policy.
805.735–4 Financial interests of Members and employees.
805.735–5 Receipt of gifts, entertainment, and favors by Members or employees.
805.735–6 Misuse of information by Members and employees.
805.735–7 Outside activities of Members and employees.
805.735–8 Employment of family members in transportation and related enterprises.
805.735–9 Use of Government property.
805.735–10 Member and employee indebtedness.
805.735–11 Gambling, betting, and lotteries.
805.735–12 Coercion.
805.735–13 Conduct prejudicial to the Government.
805.735–14 Specific regulations for special Government employees.
805.735–15 Miscellaneous statutory provisions.
805.735–16 Statements of employment and financial interests.
805.735–17 Supplementary statements.
805.735–18 Interests of employees' relatives.
805.735–19 Information not known by employees.
805.735–20 Information not required of employees.
805.735–21 Confidentiality of statements.
805.735–22 Effect of statements on other requirements.
805.735–23 Submission of statements by special Government employees.
805.735–24 Review of financial statements.
805.735–25 Publication and interpretation.
805.735–26 Employee's complaint on filing requirements.
805.735–27 Disciplinary or remedial action.
APPENDIX I TO PART 805—MISCELLANEOUS STATUTORY PROVISIONS
APPENDIX II TO PART 805—EMPLOYEES REQUIRED TO SUBMIT STATEMENTS

AUTHORITY: E.O. 11222 of May 8, 1965, 30 FR 6469, 3 CFR 1965 Supp.; 5 CFR 735.101 *et seq.*, and 5 CFR 735.404.

SOURCE: 40 FR 30239, July 17, 1975, unless otherwise noted.

§ 805.735–1 Purpose.

This part sets forth the standards of ethical and other conduct required of all Board Members and employees, in implementation of Executive Order 11222, May 8, 1965 (30 FR 6469), and part 735 of the Civil Service Commission Regulations adopted pursuant thereto (5 CFR part 735). It also contains references to the several applicable statutes governing employee conduct, particularly Pub. L. 87–849, 76 Stat. 119 (18 U.S.C. 201 *et seq.),* and the ''Code of Ethics for Government Service,'' House Concurrent Resolution 175, 85th Congress, 2d Session (72 Stat. B12).

§ 805.735–2 Definitions.

As used in this part.

Executive order means Executive Order 11222 of May 8, 1965 (30 FR 6469).

Members and employees means the Board Members and employees of the National Transportation Safety Board (Board) and active duty officers or enlisted members of the Armed Forces detailed to the Board, but does not include special Government employees.

Person means an individual, a corporation, a company, an association, a firm, a partnership, a society, a joint stock company, or any other organization or institution.

Special Government employee means an employee of the Board who is retained, designated, appointed, or employed to perform temporary duties, with or without compensation, for a period not to exceed 120 days during any period of 365 consecutive days, on either a full-time or intermittent basis.

[54 FR 10332, Mar. 13, 1989]

§ 805.735–3 Policy.

(a) The maintenance of unusually high standards of honesty, integrity, impartiality, and conduct by its Members and employees and special Government employees is essential to assure the proper performance of the Board's business and the maintenance of confidence by citizens in their Government. Therefore, the Board requires that its Members and employees and special Government employees adhere strictly to the highest standard of ethical conduct in all of their social, business, political and other off-the-job activities, relationships, and interests, as well as in their official actions.

(b) All Members and employees and special Government employees shall avoid situations which might result in

actual or apparent misconduct or conflicts of interest.

(c) Members and employees shall avoid any action, whether or not specifically prohibited by the regulations in this part which might result in, or create the appearance of:

(1) Using public office for private gain;

(2) Giving preferential treatment to any person;

(3) Impeding Government efficiency or economy;

(4) Losing complete independence or impartiality;

(5) Making a Government decision outside official channels; or

(6) Affecting adversely the confidence of the public in the integrity of the Government.

§ 805.735–4 Financial interests of Members and employees.

(a) A Member or employee shall not:

(1) Have direct or indirect financial interests which conflict, or appear to conflict, with his assigned duties and responsibilities within the Board; or

(2) Engage in, directly or indirectly, a financial transaction as a result of, or primarily relying on, information obtained through his employment by the Board.

(b) This section does not preclude a Member or an employee from having a financial interest or engaging in financial transactions to the same extent as a private citizen not employed by the Government, so long as it is not prohibited by law, the Executive Order, 5 CFR part 735, or the regulations in this part.

§ 805.735–5 Receipt of gifts, entertainment, and favors by Members or employees.

(a) Except as provided in paragraphs (b) and (g) of this section, a Member or employee shall not solicit or accept, directly or indirectly, any gift, gratuity, favor, entertainment, loan, or any other thing of monetary value, from a person who:

(1) Has, or is seeking to obtain, contractual or other business or financial relations with the Board;

(2) Conducts operations or activities that are subject to Board jurisdiction; or

(3) Has interests that may be substantially affected by the performance or nonperformance of his official duty.

(b) The prohibitions of paragraph (a) of this section do not apply to:

(1) Obvious family or personal relationships such as those between the employee and his parents, children, or spouse, when the circumstances make it clear that those relationships rather than the business of the persons concerned are the motivating factors;

(2) Acceptance of food and refreshments of nominal value on infrequent occasions in the ordinary course of a luncheon or dinner meeting, other meetings, or inspection tours where a Member or employee may properly be in attendance;

(3) Acceptance of unsolicited advertising or promotional material, such as pens, pencils, note pads, calendars, and other items of nominal intrinsic value;

(4) Acceptance of loans from banks or other financial institutions on customary terms to finance proper and usual activities of employees, such as home mortgage loans;

(5) Utilization by Members or employees of the services offered to the public by any of the persons specified in paragraph (a) of this section: *Provided,* That full value, as published in a carrier's tariffs, or as is customarily charged to the public, is paid therefor;

(6) Carriage without charge by a carrier, of Members or employees engaged in official duties, for safety purposes, as provided for in the Civil Aeronautics Board's regulations;

(7) Acceptance of invitations, when approved by the Chairman or the Managing Director, with respect to meals and accommodations when on official business outside the continental United States; where commercial accommodations are unavailable or inappropriate; or where refusal of the offer would be otherwise inappropriate in light of all circumstances involved; and

(8) Acceptance of an invitation addressed to the Board, when approved by the Chairman or the Managing Director, by an employee (including, where applicable, his wife or a member of his immediate family), to participate in an inaugural flight or similar ceremonial event related to transportation, and

accept food, lodging, and entertainment incident thereto.

(c) Members and employees shall not solicit contributions from another Member or employee for a gift, or make a donation as a gift, to a Member or employee in a superior official position.

(d) A Member or an employee in a superior official position shall not accept a gift from an employee or employees receiving less salary than himself. However, paragraph (c) of this section and this paragraph (d) do not prohibit a voluntary gift of nominal value or a donation in a nominal amount made on a special occasion, such as marriage, illness, retirement, or transfer.

(e) Members and employees shall not accept a gift, present, decoration, or other thing from a foreign government unless authorized by Congress as provided by the Constitution and in 5 U.S.C. 7342.

(f) Members and employees may not be directly reimbursed by a person for travel on official business under agency orders. However, reimbursement in the form of a donation may be made to the Board. The Member or employee involved will be paid by the Board in accordance with applicable laws and regulations relating to reimbursement for official travel. If the Member or employee is furnished accommodations, goods, or services in kind they may be treated as a donation to the Board, and either no per diem and other travel expenses will be paid or an appropriate reduction will be made in the per diem or other travel expenses payable, depending upon the extent of the donation. No Member or employee may be reimbursed, or payment made on his behalf, for excessive personal living expenses, gifts, entertainment, or other personal benefits.

(g) Members and employees are not precluded from receiving bona fide reimbursement, unless prohibited by law, for expenses of nonofficial travel and such other necessary subsistence as is compatible with this part for private personal interests for which no Government payment or reimbursement is authorized.

[40 FR 30239, July 17, 1975, as amended at 41 FR 39758, Sept. 16, 1976]

§ 805.735–6 Misuse of information by Members and employees.

For the purpose of furthering private interest, Members and employees shall not, except as provided in § 805.735–7(c), directly or indirectly, use, or allow the use of, official information obtained through or in connection with his employment within the Board which has not been made available to the general public.

§ 805.735–7 Outside activities of Members and employees.

(a) A Member or employee shall not engage in outside employment or other outside activity not compatible with the full and proper discharge of his duties and responsibilities as an officer or employee of the Board. Before an employee can engage in outside employment or activity for profit, he shall obtain the approval of the Board's Managing Director by requesting written authorization from the Managing Director prior to engaging in such activity. Board Members desiring to engage in outside employment or activity for profit may request prior written authorization from the Chairman. Should such authorization be granted, the Member or employee has a continuing responsibility to confine himself to the scope of the authorization. If the circumstances change so as to involve a possible incompatible activity, the Member or employee must seek further authorization in order to continue in his outside employment or activity for profit. Authorization granted in specific cases may be deemed subsequently to involve an incompatible activity, and in such cases the Member or employee concerned shall be notified in writing of the cancellation of the authorization with instructions to modify or terminate the outside activity at the earliest practicable time.

(b) Incompatible activities by Members or employees include, but are not limited to:

(1) Acceptance of a fee, compensation, gift, payment of expense, or any other thing of monetary value in circumstances in which acceptance may result in, or create the appearance of, a conflict of interest; or

(2) Outside employment or activity which tends to impair his mental or

physical capacity to perform in an acceptable manner his duties and responsibilities within the Board.

(c) Employees are encouraged to engage in teaching, lecturing, and writing that is not prohibited by law, the Executive order, 5 CFR part 735, or the regulations in this part. However, an employee shall not, either for or without compensation, engage in teaching, lecturing, or writing, including teaching, lecturing, or writing for the purpose of the special preparation of a person or class of persons for an examination of the Civil Service Commission or Board of Examiners for the Foreign Service, that is dependent on information obtained as a result of his employment by the Board, except when that information has been made available to the general public or will be made available on request, or when the Chairman gives written authorization for the use of nonpublic information on the basis that the use is in the public interest.

(d) Board Members, as Presidential appointees covered by section 401(a) of the Executive order, are specifically precluded by 5 CFR 735.203(c) from receiving compensation or anything of monetary value for any consultation, lecture, discussion, writing, or appearance, the subject matter of which is devoted substantially to the responsibilities, programs, or operations of their agency, or which draws substantially on official data or ideas which have not become part of the body of public information.

(e) If an activity covered by paragraphs (c) and (d) of this section is to be undertaken as official duty, expenses will be borne by the Board, and the Member or employee may not accept compensation or allow his expenses to be paid for by the person or group under whose auspices the activity is being performed. If it is determined that the activity is to be undertaken in a private capacity, the Member or employee may not use duty hours or Government facilities, but he may accept compensation, and he may use his official title if he makes it clear that he does not represent the Board.

(f) Members and employees shall not receive any salary or anything of monetary value from a private source as compensation for his services to the Board (18 U.S.C. 209).

(g) This section does not preclude a Member or employee from:

(1) Participating in the activities of national or State political parties not prohibited by law;

(2) Participating in the affairs of or acceptance of an award for a meritorious public contribution or achievement given by a charitable, religious, professional, social, fraternal, nonprofit educational or recreational, public service, or civic organization.

[40 FR 30239, July 17, 1975, as amended at 41 FR 39758, Sept. 16, 1976]

§ 805.735–8 Employment of family members in transportation and related enterprises.

(a) No individual will be employed or retained in employment by the Board if a member of his immediate family (blood relations who are residents of the employee's household) is employed by a carrier, a person or firm representing a carrier, or a transportation trade association.

(b) Members and employees may request a waiver, modification, or postponement of the implementation of this prohibition from the Chairman and Managing Director, respectively, on the grounds of undue hardship to himself or the family member involved. The request must contain an agreement to forego any privilege to which the Board Member or employee would be entitled as a relative of the family member.

[40 FR 30239, July 17, 1975, as amended at 41 FR 39758, Sept. 16, 1976]

§ 805.735–9 Use of Government property.

Members and employees shall not, directly or indirectly, use, or allow the use of, Board property of any kind, including property leased to the Board, for other than officially approved activities. A Member or employee has a positive duty to protect and conserve Board property, including equipment, supplies, and other property entrusted to or issued to him.

§ 805.735–10 Member and employee indebtedness.

Members and employees shall pay each just financial obligation in a proper and timely manner, especially one imposed by law, such as Federal, State, or local taxes. For the purpose of this section, a ''just financial obligation'' means one acknowledged by the employee or one reduced to judgment by a court, and ''in a proper and timely manner'' means in a manner which the Board determines does not, under the circumstances, reflect adversely on the Board as his employer.

§ 805.735–11 Gambling, betting, and lotteries.

Members and employees shall not participate, while on Board-owned or leased property or while on duty for the Board, in any gambling activity, including the operation of a gambling device, conducting a lottery or pool, a game for money or property, or in selling or purchasing a numbers slip or ticket. However, this section does not preclude activities regarding solicitations conducted by an employee recreation and welfare organization among its members, for organizational support, or for benefit or welfare funds for its members, these activities having been approved under section 3 of Executive Order 10927, dated March 18, 1961.

§ 805.735–12 Coercion.

Members and employees shall not use their employment by the Board to coerce, or give the appearance of coercing, a person to provide financial benefit to themselves or another person, particularly one with whom they have family, business, or financial ties.

§ 805.735–13 Conduct prejudicial to the Government.

Members and employees shall not engage in criminal, infamous, dishonest, immoral, or notoriously disgraceful conduct, or other conduct prejudicial to the Board or to the Government.

§ 805.735–14 Specific regulations for special Government employees.

(a) *Use of Board affiliation.* A special Government employee of the Board shall not use his Government employment for a purpose that is, or gives the appearance of being, motivated by the desire for private gain for himself or another person, particularly one with whom he has family, business, or financial ties.

(b) *Use of inside information.* (1) A special Government employee shall not use inside information obtained as a result of his employment by the Board for private gain for himself or another person, either by direct action on his part or by counsel, recommendation, or suggestion to another person, particularly one with whom he has family, business, or financial ties. For this purpose of this section, ''inside information'' means information obtained under Government authority which has not become part of the body of public information.

(2) Special Government employees may teach, lecture, or write in a manner not inconsistent with § 805.735–7(c) for employees.

(c) *Receipt of gifts, entertainment, and favors.* (1) A special Government employee, while employed by the Board or in connection with his employment, shall not receive or solicit from a person having business with the Board, anything of value such as a gift, gratuity, loan, entertainment, or favor for himself or another person, particularly one with whom he has family, business, or financial ties.

(2) The exception as set forth in § 805.735–5(b) for employees will apply with equivalent force and effect to special Government employees with regard to the prohibitions of paragraph (a) of this section.

(d) *Applicability of other provisions.* The provisions of § 805.735–9 (Use of Government property), § 805.735–11 (Gambling, betting, and lotteries), § 805.735–12 (Coercion), § 805.735–13 (Conduct prejudicial to the Government) and § 805.735–15 (Miscellaneous statutory provisions) apply to special Government employees in the same manner as to employees.

§ 805.735–15 Miscellaneous statutory provisions.

Each Member and employee shall acquaint himself with the statutory provisions in appendix I, attached hereto and made a part thereof, which relate to his ethical and other conduct as a

Member and employee of the Board and the Government.

§ 805.735–16 Statements of employment and financial interests.

(a) All employees in the positions specified in appendix II, attached hereto and made a part thereof, shall submit a statement of employment and financial interests under the regulations in this part in triplicate to the Personnel Officer not later than:

(1) Ninety days after the effective date of the regulations in this part if he is employed on or before that effective date; or

(2) Thirty days after he becomes subject to the reporting requirements by occupying a position covered under paragraph (a) of this section, if he occupies the position after that effective date.

(b) An employee required to submit a statement of employment and financial interests shall submit that statement in the format prescribed by the Managing Director.

(c) Board Members are subject to separate reporting requests under section 401 of the Executive order, and are not required to file statements pursuant to this section.

[40 FR 30239, July 17, 1975, as amended at 41 FR 39758, Sept. 16, 1976]

§ 805.735–17 Supplementary statements.

Changes in, or additions to, the information contained in an employee's statement of employment and financial interests shall be reported in supplementary statements, in the format prescribed by the Managing Director, as of June 30th of each year. If there are not changes or additions, a negative report is not required. Notwithstanding the filing of the annual report required by this section, each employee shall at all times avoid acquiring a financial interest that could result, or taking an action that would result, in a violation of the conflict-of-interest provisions, 18 U.S.C. 208, or the provisions of this part.

[40 FR 30239, July 17, 1975, as amended at 41 FR 39758, Sept. 16, 1976]

§ 805.735–18 Interests of employees' relatives.

The interest of a spouse, minor child, or other members of an employee's immediate household is considered to be an interest of the employee. For the purpose of this section, ''member of an employee's household'' means those blood relations who are residents of the employee's household.

§ 805.735–19 Information not known by employees.

If any information required to be included on a statement of employment and financial interests or supplementary statement, including holdings placed in trust, is not known to the employee but is known to another person, the employee shall require that other person to submit information in his behalf.

§ 805.735–20 Information not required of employees.

An employee is not required to submit on a statement of employment and financial interests or supplementary statement, any information relating to the employee's connection with, or interest in, a professional society or a charitable, religious, social, fraternal, recreational, public service, civic, or political organization, or a similar organization not conducted as a business enterprise. For the purpose of this section, educational and other institutions doing research and development or related work, involving grants of money from or contracts with the Government, are deemed ''business enterprises'' and are required to be included in an employee's statement of employment and financial interests.

§ 805.735–21 Confidentiality of statements.

Subject to the provisions of § 805.735–24 concerning review of employee statements, each statement of employment and financial interests, and each supplementary statement, shall be held in confidence. The Personnel Officer is personally responsible for the retention of employee statements in confidence and may not disclose information from a statement or allow access to a statement, except to carry out the purpose of this part, or as the Civil Service

Commission or the Chairman may determine for good cause shown.

§ 805.735–22 Effect of statements on other requirements.

The statements of employment and financial interests and supplementary statements required of employees are in addition to, and not in substitution for, or in derogation of, any similar requirement imposed by law, order, or regulation. The submission of a statement or supplementary statement by an employee does not permit him or any other person to participate in a matter in which his or the other person's participation is prohibited by law, order, or regulation.

§ 805.735–23 Submission of statements by special Government employees.

(a) A special Government employee shall submit a statement of employment and financial interests which reports:

(1) All other employment; and

(2) The financial interests of the special Government employee which the Chairman determines are relevant in the light of the duties he is to perform.

(b) A special Government employee who is a consultant or expert shall submit a statement of employment and financial interests to the Personnel Officer, in the format prescribed by the Managing Director, at the time of his employment, and shall keep his statement current throughout his period of employment by submission of supplementary statements.

(c) The Chairman may waive the requirement in paragraph (a) of this section for the submission of a statement of employment and financial interests in the case of a special Government employee who is not a consultant or an expert when it has been determined that the duties of the position held by the special Government employee are of a nature, and at such a level of responsibility, that the submission of the statement by the incumbent is not necessary to protect the integrity of the Board. For the purpose of paragraphs (b) and (c) of this section, the following are examples of special Government employees who are not consultants and experts;

(1) A physician, dentist, or allied medical specialist whose services are procured to provide care and service to patients; or

(2) A veterinarian whose services are procured to provide care and service to animals.

[40 FR 30239, July 17, 1975, as amended at 41 FR 39758, Sept. 16, 1976]

§ 805.735–24 Review of financial statements.

(a) The Personnel Officer shall review each statement of employment and financial interests submitted under the regulations in this part (other than his own, which is reviewed by the Managing Director) to determine whether conflicts of interest or apparent conflicts of interest exist. If the review, or other information from other sources, indicates a conflict between the interests of an employee or special Government employee and the performance of his services for the Board, the Personnel Officer shall forward the statement, together with a position description of the employee involved, to the General Counsel of the Board.

(b) The employee or special Government employee whose statement has been referred under the provisions of paragraph (a) of this section will receive, from the General Counsel, advice and guidance regarding the matters questioned by the Personnel Officer. He will be afforded an opportunity to explain the conflict or appearance of conflict. It is expected that most problems will be settled at this informal stage. However, if an agreement cannot be reached after consultation, the matter shall be reported by the General Counsel, after consulting with the Managing Director, to the Chairman for resolution.

(c) The Chairman may provide the employee or special Government employee concerned with an additional opportunity to explain the conflict or appearance of conflict. If the matter cannot be resolved, the Chairman may invoke the disciplinary provisions of § 805.735–27, or may decide that remedial steps shall be taken with regard to such employee or special Government employee. When the questions of conflict of interest are resolved at one of

the stages of review, the reviewing official shall sign and date a copy of the employee's statement to evidence his clearance, and this statement shall thereafter be kept as provided in § 805.735–21.

[40 FR 30239, July 17, 1975, as amended at 41 FR 39758, Sept. 16, 1976]

§ 805.735–25 Publication and interpretation.

(a) The Personnel Officer of the Board shall be responsible for making the regulations in this part and all revisions thereof, and the formats for statements of employment and financial interests available to:

(1) Each Member, employee, and special Government employee at the time of issuance and at least annually thereafter;

(2) Each new Member, employee, and special Government employee of the Board at the time of his entrance on duty; and

(3) Each Member, employee, and special Government employee of the Board at such other times as circumstances warrant.

(b) The Personnel Officer shall have available for review by Members, employees, and special Government employees of the Board, copies of such laws, Executive orders, Civil Service Commission regulations and instructions, and Board regulations as may currently appertain to their standards of ethical and other conduct.

(c) The General Counsel of the Board is designated to provide counseling and assistance to interpret the regulations in this part and matters relating to ethical conduct, particularly matters subject to the provisions of the conflict-of-interest laws and other matters covered by the Executive order. These counseling services are available to all Members, employees, and special Government employees at the General Counsel's office, by appointment for consultation or by written communication.

§ 805.735–26 Employee's complaint on filing requirements.

An employee who believes that his position has been improperly included under the regulations in this part, as one requiring the submission of a statement of employment and financial interests, may request review through the Board's grievance procedure.

§ 805.735–27 Disciplinary or remedial action.

(a) A violation of the regulations in this part by an employee or special Government employee may be cause for disciplinary action in addition to any penalty prescribed by Federal statute or regulation, except for active duty officers or enlisted members of the Armed Forces detailed to the Board in which cases disciplinary actions may be effected against such military personnel by the parent military service. Disciplinary action may take the form of a warning, suspension, demotion, or removal, depending upon the gravity of the offense.

(b) Any employee or special Government employee who is charged with a violation of the regulations in this part shall be provided an opportunity to explain the violation, or appearance of violation, to the charging authority. The charging authority shall be the Managing Director of the Board.

(c) When, after consideration of the explanation, the charging authority decides that disciplinary action is not required, he may take appropriate remedial action. Remedial action may include, but is not limited to:

(1) Changes in assigned duties;

(2) Divestment by the employee or special Government employee of any financial interest that conflicts, or appears to conflict, with the performance of his official duties; or

(3) Disqualification for a particular assignment.

(d) Remedial or disciplinary action shall be effected in accordance with any applicable laws, Executive orders, and regulations.

[40 FR 30239, July 17, 1975, as amended at 41 FR 39758, Sept. 16, 1976]

APPENDIX I TO PART 805—MISCELLANEOUS STATUTORY PROVISIONS

Each Member and employee and each special Government employee has a positive duty to acquaint himself with each statute which relates to his ethical and other conduct as an officer or employee of the National Transportation Safety Board and of the Government. Therefore, each Member

and employee and each special Government employee shall acquaint himself with the following statutory and nonstatutory provisions which relate to his ethical and other conduct:

(a) House Concurrent Resolution 175, 85th Congress, 2d Session (72 Stat. B12), the ''Code of Ethics for Government Service.''

(b) Chapter 11 of Title 18, United States Code, relating to bribery, graft, and conflicts of interest (18 U.S.C. 201 through 209).

(c) The prohibition against lobbying with appropriate funds (18 U.S.C. 1913).

(d) The prohibitions against disloyalty and striking (5 U.S.C. 7311, 18 U.S.C. 1918).

(e) The prohibition against the employment of a member of a Communist organization (50 U.S.C. 784).

(f) The prohibition against:

(1) The disclosure of classified information (18 U.S.C. 798, 50 U.S.C. 783); and

(2) The disclosure of confidential information (18 U.S.C. 1905, 49 U.S.C. 1472(f)).

(g) The provision relating to the habitual use of intoxicants to excess (5 U.S.C. 8352).

(h) The prohibition against the misuse of a Government vehicle (31 U.S.C. 638a(c)).

(i) The prohibition against the misuse of the franking privilege (18 U.S.C. 1719).

(j) The prohibition against the use of deceit in an examination or personnel action in connection with Government employment (18 U.S.C. 1917).

(k) The prohibition against fraud or false statements in a Government matter (18 U.S.C. 1001).

(l) The prohibition against mutilating or destroying a public record (18 U.S.C. 2071).

(m) The prohibition against counterfeiting and forging transportation requests (18 U.S.C. 508).

(n) The prohibition against:

(1) Embezzlement of Government money or property (18 U.S.C. 641);

(2) Failing to account for public money (18 U.S.C. 643); and

(3) Embezzlement of the money or property of another person in the possession of an employee by reason of his employment (18 U.S.C. 654).

(o) The prohibition against unauthorized use of documents relating to claims from or by the Government (18 U.S.C. 285).

(p) The prohibition against political activities in subchapter III of chapter 73 of title 5, U.S.C., and 18 U.S.C. 602, 603, 607, and 608.

(q) The prohibition against an employee's acting as the agent of a foreign principal registered under the Foreign Agents Registration Act (18 U.S.C. 219).

APPENDIX II TO PART 805—EMPLOYEES REQUIRED TO SUBMIT STATEMENTS

Statements of employment and financial interests are required of the following:

(a) Employees in grades GS–16 or above, or in positions not subject to the Classification Act paid at a rate at or above the entrance rate for GS–16.

(b) Special assistants to the members.

(c) Office of the managing director:

(1) Legislative affairs officer.

(2) Program analysis officer.

(d) Attorneys in grade GS–15.

(e) Office of public affairs:

(1) Director.

(2) Deputy director.

(f) Bureau of administration:

(1) Director.

(2) Deputy director—personnel officer.

(3) Chief, operations and facilities division.

(4) Contracting specialist.

(5) Comptroller.

(6) Budget officer.

(7) Accounting officer.

(g) Division and branch chiefs within the bureaus of accident investigation, technology, and plans and programs.

(h) Chief or senior investigators, field offices.

[41 FR 39758, Sept. 16, 1976]

NOTE: The above regulation and its appendices were approved by the Civil Service Commission (OPM) on July 16, 1968, and September 13, 1972, respectively, prior to submission to the Office of the Federal Register.

PART 806—NATIONAL SECURITY INFORMATION POLICY AND GUIDELINES, IMPLEMENTING REGULATIONS

Sec.
806.1 General policy.
806.2 Applicability.
806.3 Definitions.
806.4 Mandatory review for declassification.

AUTHORITY: Sec. 304, Independent Safety Board Act of 1974, 88 Stat. 2168 (49 U.S.C. 1903). E.O. 12065, 43 FR 28949, July 3, 1978.

SOURCE: 45 FR 20104, Mar. 27, 1980, unless otherwise noted.

§ 806.1 General policy.

(a) The interests of the United States and its citizens are best served by making information regarding the affairs of Government readily available to the public. This concept of an informed citizenry is reflected in the Freedom of Information Act and in the current public information policies of the executive branch.

(b) Within the Federal Government there is some official information and

material which, because it bears directly on the effectiveness of our national defense and the conduct of our foreign relations, must be subject to some constraints for the security of our Nation and the safety of our people and our allies. To protect against actions hostile to the United States, of both an overt and covert nature, it is essential that such official information and material be given only limited dissemination.

§ 806.2 Applicability.

This rule supplements Executive Order 12065 within the Board with regard to national security information. It establishes general policies and certain procedures for the classification and declassification of information which is generated, processed, and/or stored by the Board. In this connection, the Board does not have any original classification authority but infrequently does receive classified information from other agencies.

§ 806.3 Definitions.

(a) Classified information. Information or material, herein collectively termed information, that is owned by, produced for or by, or under the control of, the United States Government and that has been determined pursuant to Executive Order 12065, or prior orders, to require protection against unauthorized disclosure and that is so designated. One of the following classifications will be shown:

(1) *Top secret* means information, the unauthorized disclosure of which reasonably could be expected to cause exceptionally grave damage to the national security.

(2) *Secret* means information, the unauthorized disclosure of which reasonably could be expected to cause serious damage to national security.

(3) *Confidential* means information, the unauthorized disclosure of which reasonably could be expected to cause identifiable damage to the national security.

(b) *Foreign government information* means either: (1) Information provided to the United States by a foreign government or international organization of governments in the expectation, express or implied, that the information is to be kept in confidence; or (2) information produced by the United States pursuant to a written joint arrangement with a foreign government or international organization of governments requiring that either the information or the arrangements or both, be kept in confidence.

(c) *National security* means the national defense and foreign relations of the United States.

(d) *Declassification event* means an event which would eliminate the need for continued classification.

§ 806.4 Mandatory review for declassification.

(a) Requests for mandatory review for declassification under section 3–501 of E.O. 12065 must be in writing and should be addressed to: National Security Oversight Officer, National Transportation Safety Board, Washington, DC 20594.

(b) The requester shall be informed of the date of receipt of the request at the Board. This date will be the basis for the time limits specified by section 3–501 of E.O. 12065. If the request does not reasonably describe the information sought, the requester shall be notified that, unless additional information is provided or the request is made more specific, no further action will be taken.

(c) When the Board receives a request for information in a document which is in its custody but which was classified by another agency, it shall refer the request to the appropriate agency for review, together with a copy of the document containing the information requested, where practicable. The Board shall also notify the requester of the referral, unless the association of the reviewing agency with the information requires protection. The reviewing agency shall review the document in coordination with any other agency involved or which had a direct interest in the classification of the subject matter. The reviewing agency shall respond directly to the requester in accordance with the pertinent procedures described above and, if requested, shall notify the Board of its determination.

PART 807—ENFORCEMENT OF NONDISCRIMINATION ON THE BASIS OF HANDICAP IN PROGRAMS OR ACTIVITIES CONDUCTED BY THE NATIONAL TRANSPORTATION SAFETY BOARD

Sec.
807.101 Purpose.
807.102 Application.
807.103 Definitions.
807.104–807.109 [Reserved]
807.110 Self-evaluation.
807.111 Notice.
807.112–807.129 [Reserved]
807.130 General prohibitions against discrimination.
807.131–807.139 [Reserved]
807.140 Employment.
807.141–807.148 [Reserved]
807.149 Program accessibility: Discrimination prohibited.
807.150 Program accessibility: Existing facilities.
807.151 Program accessibility: New construction and alterations.
807.152–807.159 [Reserved]
807.160 Communications.
807.161–807.169 [Reserved]
807.170 Compliance procedures.

AUTHORITY: 29 U.S.C. 794.

SOURCE: 51 FR 4578, Feb. 5, 1986, unless otherwise noted.

§ 807.101 Purpose.

This part effectuates section 119 of the Rehabilitation, Comprehensive Services, and Developmental Disabilities Amendments of 1978, which amended section 504 of the Rehabilitation Act of 1973 to prohibit discrimination on the basis of handicap in programs or activities conducted by Executive agencies or the United States Postal Service.

§ 807.102 Application.

This part applies to all programs or activities conducted by the agency.

§ 807.103 Definitions.

For purposes of this part, the term—

Assistant Attorney General means the Assistant Attorney General, Civil Rights Division, United States Department of Justice.

Auxiliary aids means services or devices that enable persons with impaired sensory, manual, or speaking skills to have an equal opportunity to participate in, and enjoy the benefits of, programs or activities conducted by the agency. For example, auxiliary aids useful for persons with impaired vision include readers, Brailled materials, audio recordings, telecommunications devices and other similar services and devices. Auxiliary aids useful for persons with impaired hearing include telephone handset amplifiers, telephones compatible with hearing aids, telecommunication devices for deaf persons (TDD's), interpreters, notetakers, written materials, and other similar services and devices.

Complete complaint means a written statement that contains the complainant's name and address and describes the agency's alleged discriminatory action in sufficient detail to inform the agency of the nature and date of the alleged violation of section 504. It shall be signed by the complainant or by someone authorized to do so on his or her behalf. Complaints filed on behalf of classes or third parties shall describe or identify (by name, if possible) the alleged victims of discrimination.

Facility means all or any portion of buildings, structures, equipment, roads, walks, parking lots, rolling stock or other conveyances, or other real or personal property.

Handicapped person means any person who has a physical or mental impairment that substantially limits one or more major life activities, has a record of such an impairment, or is regarded as having such an impairment.

As used in this definition, the phrase:

(1) *Physical or mental impairment* includes—

(i) Any physiological disorder or condition, cosmetic disfigurement, or anatomical loss affecting one of more of the following body systems: Neurological; musculoskeletal; special sense organs; respiratory, including speech organs; cardiovascular; reproductive; digestive; genitourinary; hemic and lymphatic; skin; and endocrine; or

(ii) Any mental or psychological disorder, such as mental retardation, organic brain syndrome, emotional or mental illness, and specific learning disabilities. The term *physical or mental impairment* includes, but is not limited

to, such diseases and conditions as orthopedic, visual, speech, and hearing impairments, cerebral palsy, epilepsy, muscular dystrophy, multiple sclerosis, cancer, heart disease, diabetes, mental retardation, emotional illness, and drug addiction and alcoholism.

(2) *Major life activities* includes functions such as caring for one's self, performing manual tasks, walking, seeing, hearing, speaking, breathing, learning, and working.

(3) *Has a record of such an impairment* means has a history of, or has been misclassified as having, a mental or physical impairment that substantially limits one or more major life activities.

(4) *Is regarded as having an impairment* means—

(i) Has a physical or mental impairment that does not substantially limit major life activities but is treated by the agency as constituting such a limitation;

(ii) Has a physical or mental impairment that substantially limits major life activities only as a result of the attitudes of others toward such impairment; or

(iii) Has none of the impairments defined in subparagraph (1) of this definition but is treated by the agency as having such an impairment.

Qualified handicapped person means—

(1) With respect to any agency program or activity under which a person is required to perform services or to achieve a level of accomplishment, a handicapped person who meets the essential eligibility requirements and who can achieve the purpose of the program or activity without modifications in the program or activity that the agency can demonstrate would result in a fundamental alteration in its nature; or

(2) With respect to any other program or activity, a handicapped person who meets the essential eligibility requirements for participation in, or receipt of benefits from, that program or activity.

(3) *Qualified handicapped person* is defined for purposes of employment in 29 CFR 1613.702(f), which is made applicable to this part by § 807.140.

Section 504 means section 504 of the Rehabilitation Act of 1973 (Pub. L. 93–112, 87 Stat. 394 (29 U.S.C. 794)), as amended by the Rehabilitation Act Amendments of 1974 (Pub. L. 93–516, 88 Stat. 1617), and the Rehabilitation, Comprehensive Services, and Developmental Disabilities Amendments of 1978 (Pub. L. 95–602, 92 Stat. 2955). As used in this part, section 504 applies only to programs or activities conducted by Executive agencies and not to federally assisted programs.

[51 FR 4579, Feb. 5, 1986; 51 FR 7543, Mar. 5, 1986]

§§ 807.104–807.109 [Reserved]

§ 807.110 Self-evaluation.

(a) The agency shall, by April 9, 1987, evaluate its current policies and practices, and the effects thereof, that do not or may not meet the requirements of this part, and to the extent modification of any such policies and practices is required, the agency shall proceed to make the necessary modifications.

(b) The agency shall provide an opportunity to interested persons, including handicapped persons or organizations representing handicapped persons, to participate in the self-evaluation process by submitting comments (both oral and written).

(c) The agency shall, until three years following the completion of the self-evaluation, maintain on file and make available for public inspections:

(1) A description of areas examined and any problems identified, and

(2) A description of any modifications made.

§ 807.111 Notice.

The agency shall make available to employees, applicants, participants, beneficiaries, and other interested persons such information regarding the provisions of this part and its applicability to the programs or activities conducted by the agency, and make such information available to them in such manner as the head of the agency finds necessary to apprise such persons of the protections against discrimination assured them by section 504 and this regulation.

§§ 807.112–807.129 [Reserved]

§ 807.130 General prohibitions against discrimination.

(a) No qualified handicapped person shall, on the basis of handicap, be excluded from participation in, be denied the benefits of, or otherwise be subjected to discrimination under any program or activity conducted by the agency.

(b)(1) The agency, in providing any aid, benefit, or service, may not, directly or through contractual, licensing, or other arrangements, on the basis of handicap—

(i) Deny a qualified handicapped person the opportunity to participate in or benefit from the aid, benefit, or service;

(ii) Afford a qualified handicapped person an opportunity to participate in or benefit from the aid, benefit, or service that is not equal to that afforded others;

(iii) Provide a qualified handicapped person with an aid, benefit, or service that is not as effective in affording equal opportunity to obtain the same result, to gain the same benefit, or to reach the same level of achievement as that provided to others;

(iv) Provide different or separate aid, benefits, or services to handicapped persons or to any class of handicapped persons than is provided to others unless such action is necessary to provide qualified handicapped persons with aid, benefits, or services that are as effective as those provided to others;

(v) Deny a qualified handicapped person the opportunity to participate as a member of planning or advisory boards; or

(vi) Otherwise limit a qualified handicapped person in the enjoyment of any right, privilege, advantage, or opportunity enjoyed by others receiving the aid, benefit, or service.

(2) The agency may not deny a qualified handicapped person the opportunity to participate in programs or activities that are not separate or different, despite the existence of permissibly separate or different programs or activities.

(3) The agency may not, directly or through contractual or other arrangements, utilize criteria or methods of administration the purpose or effect of which would—

(i) Subject qualified handicapped persons to discrimination on the basis of handicap; or

(ii) Defeat or substantially impair accomplishment of the objectives of a program or activity with respect to handicapped persons.

(4) The agency may not, in determining the site or location of a facility, make selections the purpose or effect of which would—

(i) Exclude handicapped persons from, deny them the benefits of, or otherwise subject them to discrimination under any program or activity conducted by the agency; or

(ii) Defeat or substantially impair the accomplishment of the objectives of a program or activity with respect to handicapped persons.

(5) The agency, in the selection of procurement contractors, may not use criteria that subject qualified handicapped persons to discrimination on the basis of handicap.

(c) The exclusion of nonhandicapped persons from the benefits of a program limited by Federal statute or Executive order to handicapped persons or the exclusion of a specific class of handicapped persons from a program limited by Federal statute or Executive order to a different class of handicapped persons is not prohibited by this part.

(d) The agency shall administer programs and activities in the most integrated setting appropriate to the needs of qualified handicapped persons.

§§ 807.131–807.139 [Reserved]

§ 807.140 Employment.

No qualified handicapped person shall, on the basis of handicap, be subjected to discrimination in employment under any program or activity conducted by the agency. The definitions, requirements, and procedures of section 501 of the Rehabilitation Act of 1973 (29 U.S.C. 791), as established by the Equal Employment Opportunity Commission in 29 CFR part 1613, shall apply to employment in federally conducted programs or activities.

§§ 807.141–807.148 [Reserved]

§ 807.149 Program accessibility: Discrimination prohibited.

Except as otherwise provided in § 807.150, no qualified handicapped person shall, because the agency's facilities are inaccessible to or unusable by handicapped persons, be denied the benefits of, be excluded from participation in, or otherwise be subjected to discrimination under any program or activity conducted by the agency.

§ 807.150 Program accessibility: Existing facilities.

(a) *General*. The agency shall operate each program or activity so that the program or activity, when viewed in its entirety, is readily accessible to and usable by handicapped persons. This paragraph does not—

(1) Necessarily require the agency to make each of its existing facilities accessible to and usable by handicapped persons; or

(2) Require the agency to take any action that it can demonstrate would result in a fundamental alteration in the nature of a program or activity or in undue financial and administrative burdens. In those circumstances where agency personnel believe that the proposed action would fundamentally alter the program or activity or would result in undue financial and administrative burdens, the agency has the burden of proving that compliance with § 807.150(a) would result in such alteration or burdens. The decision that compliance would result in such alteration or burdens must be made by the agency head or his or her designee after considering all agency resources available for use in the funding and operation of the conducted program or activity, and must be accompanied by a written statement of the reasons for reaching that conclusion. If an action would result in such an alteration or such burdens, the agency shall take any other action that would not result in such an alteration or such burdens but would nevertheless ensure that handicapped persons receive the benefits and services of the program or activity.

(b) *Methods*. The agency may comply with the requirements of this section through such means as redesign of equipment, reassignment of services to accessible buildings, assignment of aides to beneficiaries, home visits, delivery of services at alternate accessible sites, alteration of existing facilities and construction of new facilities, use of accessible rolling stock, or any other methods that result in making its programs or activities readily accessible to and usable by handicapped persons. The agency is nor required to make structural changes in existing facilities where other methods are effective in achieving compliance with this section. The agency, in making alterations to existing buildings, shall meet accessibility requirements to the extent compelled by the Architectural Barriers Act of 1968, as amended (42 U.S.C. 4151–4157), and any regulations implementing it. In choosing among available methods for meeting the requirements of this section, the agency shall give priority to those methods that offer programs and activities to qualified handicapped persons in the most integrated setting appropriate.

(c) *Time period for compliance*. The agency shall comply with the obligations established under this section by June 6, 1986, except that where structural changes in facilities are undertaken, such changes shall be made by April 7, 1989, but in any event as expeditiously as possible.

(d) *Transition plan*. In the event that structural changes to facilities will be undertaken to achieve program accessibility, the agency shall develop, by October 7, 1986, a transition plan setting forth the steps necessary to complete such changes. The agency shall provide an opportunity to interested persons, including handicapped persons or organizations representing handicapped persons, to participate in the development of the transition plan by submitting comments (both oral and written). A copy of the transition plan shall be made available for public inspection. The plan shall, at a minimum—

(1) Identify physical obstacles in the agency's facilities that limit the accessibility of its programs or activities to handicapped persons;

(2) Describe in detail the methods that will be used to make the facilities accessible;

(3) Specify the schedule for taking the steps necessary to achieve compliance with this section and, if the time period of the transition plan is longer than one year, identify steps that will be taken during each year of the transition period; and

(4) Indicate the official responsible for implementation of the plan.

[51 FR 4579, Feb. 5, 1986; 51 FR 7543, Mar. 5, 1986]

§ 807.151 Program accessibility: New construction and alterations.

Each building or part of a building that is constructed or altered by, on behalf of, or for the use of the agency shall be designed, constructed, or altered so as to be readily accessible to and usable by handicapped persons. The definitions, requirements, and standards of the Architectural Barriers Act (42 U.S.C. 4151–4157), as established in 41 CFR 101–19.600 to 101–19.607, apply to buildings covered by this section.

§§ 807.152–807.159 [Reserved]

§ 807.160 Communications.

(a) The agency shall take appropriate steps to ensure effective communication with applicants, participants, personnel of other Federal entities, and members of the public.

(1) The agency shall furnish appropriate auxiliary aids where necessary to afford a handicapped person an equal opportunity to participate in, and enjoy the benefits of, a program or activity conducted by the agency.

(i) In determining what type of auxiliary aid is necessary, the agency shall give primary consideration to the requests of the handicapped person.

(ii) The agency need not provide individually prescribed devices, readers for personal use or study, or other devices of a personal nature.

(2) Where the agency communicates with applicants and beneficiaries by telephone, telecommunication devices for deaf persons (TDD's) or equally effective telecommunication systems shall be used.

(b) The agency shall ensure that interested persons, including persons with impaired vision or hearing, can obtain information as to the existence and location of accessible services, activities, and facilities.

(c) The agency shall provide signage at a primary entrance to each of its inaccessible facilities, directing users to a location at which they can obtain information about accessible facilities. The international symbol for accessibility shall be used at each primary entrance of an accessible facility.

(d) This section does not require the agency to take any action that it can demonstrate would result in a fundamental alteration in the nature of a program or activity or in undue financial and administrative burdens. In those circumstances where agency personnel believe that the proposed action would fundamentally alter the program or activity or would result in undue financial and administrative burdens, the agency has the burden of proving that compliance with § 807.160 would result in such alteration or burdens. The decision that compliance would result in such alteration or burdens must be made by the agency head or his or her designee after considering all agency resources available for use in the funding and operation of the conducted program or activity, and must be accompanied by a written statement of the reasons for reaching that conclusion. If an action required to comply with this section would result in such an alteration or such burdens, the agency shall take any other action that would not result in such an alteration or such burdens but would nevertheless ensure that, to the maximum extent possible, handicapped persons receive the benefits and services of the program or activity.

§§ 807.161–807.169 [Reserved]

§ 807.170 Compliance procedures.

(a) Except as provided in paragraph (b) of this section, this section applies to all allegations of discrimination on the basis of handicap in programs or activities conducted by the agency.

(b) The agency shall process complaints alleging violations of section 504 with respect to employment according to the procedures established by the Equal Employment Opportunity

Commission in 29 CFR part 1613 pursuant to section 501 of the Rehabilitation Act of 1973 (29 U.S.C. 791).

(c) Director, Bureau of Administration shall be responsible for coordinating implementation of this section. Complaints may be sent to Director, Bureau of Administration, 800 Independence Ave., SW., Room 802, Washington, DC 20594.

(d) The agency shall accept and investigate all complete complaints for which it has jurisdiction. All complete complaints must be filed within 180 days of the alleged act of discrimination. The agency may extend this time period for good cause.

(e) If the agency receives a complaint over which it does not have jurisdiction, it shall promptly notify the complainant and shall make reasonable efforts to refer the complaint to the appropriate government entity.

(f) The agency shall notify the Architectural and Transportation Barriers Compliance Board upon receipt of any complaint alleging that a building or facility that is subject to the Architectural Barriers Act of 1968, as amended (42 U.S.C. 4151–4157), or section 502 of the Rehabilitation Act of 1973, as amended (29 U.S.C. 792), is not readily accessible to and usable by handicapped persons.

(g) Within 180 days of the receipt of a complete complaint for which it has jurisdiction, the agency shall notify the complainant of the results of the investigation in a letter containing—

(1) Findings of fact and conclusions of law;

(2) A description of a remedy for each violation found;

(3) A notice of the right to appeal.

(h) Appeals of the findings of fact and conclusions of law or remedies must be filed by the complainant within 90 days of receipt from the agency of the letter required by §807.170(g). The agency may extend this time for good cause.

(i) Timely appeals shall be accepted and processed by the head of the agency.

(j) The head of the agency shall notify the complainant of the results of the appeal within 60 days of the receipt of the request. If the head of the agency determines that additional information is needed from the complainant, he or she shall have 60 days from the date of receipt of the additional information to make his or her determination on the appeal.

(k) The time limits cited in paragraphs (g) and (j) of this section may be extended with the permission of the Assistant Attorney General.

(l) The agency may delegate its authority for conducting complaint investigations to other Federal agencies, except that the authority for making the final determination may not be delegated to another agency.

[51 FR 4579, Feb. 5, 1986, as amended at 51 FR 4579, Feb. 5, 1986]

PART 821—RULES OF PRACTICE IN AIR SAFETY PROCEEDINGS

Subpart A—General Provisions

Sec.
821.1 Definitions.
821.2 Applicability and description of part.
821.3 Description of docket numbering system.

Subpart B—General Rules Applicable to Petitions for Review, Appeals to the Board, and Appeals From Initial Decisions

821.6 Appearances and rights of witnesses.
821.7 Filing of documents with the Board.
821.8 Service of documents.
821.9 Intervention and amicus appearance.
821.10 Computation of time.
821.11 Extension of time.
821.12 Amendment and withdrawal of pleadings.
821.13 Waivers.
821.14 Motions.
821.15 Motion to disqualify a Board Member.
821.16 Appeals from law judge's interlocutory rulings and motions.
821.17 Motions to dismiss and for judgment on the pleadings.
821.18 Motion for more definite statement.
821.19 Depositions and other discovery.
821.20 Subpoenas, witness fees, and appearances of Board Members, officers, or employees.
821.21 Official notice.

Subpart C—Special Rules Applicable to Proceedings Under 49 U.S.C. 44709

821.24 Initiation of proceedings.
821.25 Burden of proof.
821.26 Motion to dismiss petition for review for lack of standing.

Subpart D—Special Rules Applicable to Proceedings Under 49 U.S.C. 44709

821.30 Initiation of proceedings.
821.31 Complaint procedure.
821.32 Burden of proof.
821.33 Motion to dismiss stale complaint.

Subpart E—Law Judges

821.35 Assignment, duties, and powers.

Subpart F—Hearings

821.37 Notice of hearing.
821.38 Evidence.
821.39 Argument and submissions.
821.40 Record.
821.41 Certification to the Board.

Subpart G—Initial Decision

821.42 Initial decision by law judge.
821.43 Effect of law judge's initial decision and filing an appeal therefrom.

Subpart H—Appeals from Initial Decisions

821.47 Notice of appeal.
821.48 Briefs and oral argument.
821.49 Issues on appeal.
821.50 Petitions for rehearing, reargument, reconsideration, or modification of an order of the Board.

Subpart I—Rules Applicable to Emergency Proceedings and Other Immediately Effective Orders

821.52 General.
821.53 Appeal.
821.54 Review of Administrator's determination of emergency.
821.55 Complaint, answer to complaint, motions, and discovery.
821.56 Hearing and initial decision.
821.57 Procedure on appeal.

Subpart J—Ex Parte Communications

821.60 Definitions.
821.61 Prohibited ex parte communications.
821.62 Procedures for handling ex parte communication.
821.63 Requirement to show cause and imposition of sanction.

Subpart K—Judicial Review of Board Orders

821.64 Judicial review.

AUTHORITY: 49 U.S.C. 1101–1155, 44701–44723, 46301; unless otherwise noted.

SOURCE: 40 FR 30243, July 17, 1975, unless otherwise noted.

EDITORIAL NOTE: Nomenclature changes to part 821 appear at 65 FR 42639, July 11, 2000.

Subpart A—General Provisions

§ 821.1 Definitions.

As used in this part:

Administrator means the Administrator of the Federal Aviation Administration (FAA);

Airman certificate means any certificate issued by the FAA to an airman and shall include medical certificates required for an airman;

Appeal from an initial decision means a request to the Board to review a law judge's decision;

Appeal to the Board means a request to the Board for the review by a law judge of an order of the Administrator;

Board means the National Transportation Safety Board;

Certificate means any certificate issued by the Administrator under 49 U.S.C. Chapter 447;

Chief Law Judge means the administrative law judge in charge of the Office of Administrative Law Judges;

Complaint means an order of the Administrator from which an appeal to the Board has been taken pursuant to sections 501(e)(2), 49 U.S.C. 44709, 611(c), or 901 of the Act.

Emergency order means an order of the Administrator issued pursuant to 49 U.S.C. 44709, which recites that an emergency exists and that safety in air commerce or air transportation and the public interest require the immediate effectiveness of such order;

Flight engineer means a person who holds a flight engineer certificate issued under part 63 of title 14 of the Code of Federal Regulations.

Initial decision means the law judge's decision on the issue remaining for disposition at the close of a hearing before him or her and/or an order that has the effect of terminating the proceeding, such as one granting a motion to dismiss in lieu of an answer, as provided in § 821.17, and one granting a motion for summary judgment. *Initial decision* does not include cases where the record is certified to the Board, with or without a recommended decision, orders partly granting a motion to dismiss and requiring an answer to any remaining allegations, or rulings by the law judge on interlocutory matters appealed to the Board under § 821.16;

Law judge means the administrative law judge assigned to hear and preside over the respective proceedings;

Mechanic means a person who holds a mechanic certificate issued under part 65 of title 14 of the Code of Federal Regulations.

Order means the document (sometimes also called a complaint) in which the Administrator seeks to impose a civil penalty or amend, modify, suspend or revoke a certificate.

Petition for review means a petition filed pursuant to 49 U.S.C. 44709 for review of the Administrator's denial of an application for issuance or renewal of an airman certificate;

Petitioner means a person who has filed a petition for review;

Pilot means a person who holds a pilot certificate issued under part 61 of title 14 of the Code of Federal Regulations.

Repairman means a person who holds a repairman certificate issued under part 65 of Title 14 of the Code of Federal Regulations.

Respondent means the holder of a certificate who has appealed to the Board from an order of the Administrator imposing a civil penalty or amending, modifying, suspending, or revoking a certificate.

Terms defined in 49 U.S.C. Chapters 11, 447, and 463 are used as so defined.

[40 FR 30243, July 17, 1975, as amended at 58 FR 11380, Feb. 25, 1993; 59 FR 59046, Nov. 15, 1994; 65 FR 42639, July 11, 2000]

§ 821.2 Applicability and description of part.

The provisions of this part govern all air safety proceedings, including proceedings involving airman medical certification, before a law judge on petition for review of the denial of any airman certificate or on appeal from any order of the Administrator amending, modifying, suspending or revoking any certificate. The provisions of this part also govern all proceedings on appeal from an order of the Administrator imposing a civil penalty on a flight engineer, mechanic, pilot, or repairman, or a person acting in that capacity, where the underlying violation occurred on or after August 26, 1992, and all proceedings on appeal to the Board from any order or decision of a law judge.

[59 FR 59054, Nov. 15, 1994]

§ 821.3 Description of docket numbering system.

In addition to sequential numbering of cases as received, each case formally handled by the Board receives a letter prefix. These letter prefixes reflect the case type: ''SE'' for the safety enforcement (suspension/revocation) docket; ''SM'' (safety medical) for an enforcement case involving a medical application; ''SR'' for a case involving safety registration issues under 49 U.S.C. 44101 *et seq.;* ''CD'' for certificate denial (see 49 U.S.C. 44703); ''CP'' for cases in which the Administrator seeks a civil penalty; and ''EAJA'' for applications seeking Equal Access to Justice Act awards.

[59 FR 59046, Nov. 15, 1994, as amended at 65 FR 42639, July 11, 2000]

Subpart B—General Rules Applicable to Petitions for Review, Appeals to the Board, and Appeals From Initial Decisions

§ 821.6 Appearances and rights of witnesses.

(a) Any party to a proceeding may appear and be heard in person or by attorney or other representative designated by him or her. No register of persons who may practice before the Board is maintained, and no application for admission to practice is required. Upon hearing, and for good cause shown, the Board may suspend or bar any person from practicing before it.

(b) Any person appearing in person in any proceeding governed by this part, may be accompanied, represented, and advised by counsel and may be examined by his or her own counsel or representative.

(c) Any person who submits data or evidence in a proceeding governed by this part, may by timely request procure a copy of any document submitted by him or her, or a copy of any transcript made of his or her testimony on payment of reasonable costs. Original documents or data or evidence may be retained by a party upon permission of

the law judge or the Board, upon substitution of a copy therefor.

(d) Any party to a proceeding who is represented by an attorney or party representative shall notify the Board of the name and address of that attorney or representative. In the event of a change in attorney or representative of record, a party shall notify the Board, in the manner provided in § 821.7(a), and the other parties to the proceeding, prior to the attorney or representative participating in any way, including the filing of documents, in any proceeding.

[40 FR 30243, July 17, 1975, as amended at 49 FR 28249, July 11, 1984; 59 FR 59046, Nov. 15, 1994]

§ 821.7 Filing of documents with the Board.

(a) *Filing address, date and method of filing.* Generally, documents are to be filed with the Office of Administrative Law Judges, National Transportation Safety Board, 490 L'Enfant Plaza East, S.W., Washington, DC 20594–2000, and addressed to the assigned law judge, if any. Subsequent to the filing of a notice of appeal from a law judge's initial decision or order terminating the proceeding (written or oral), or a decision permitting an interlocutory appeal, all documents should be directed to the Office of General Counsel, also at the above address. Filing of any document shall be by personal delivery, by U.S. Postal Service first class mail, or by overnight mail delivery service. Except as provided in § 821.57, facsimile filing is permitted as a convenience to the parties only. It does not substitute for filing requirements in this part, and any fax transmission to the Board must be followed, no later than the following busniess day, by a confirmation copy, clearly marked as such, sent by a method of service authorized in this paragraph. Unless otherwise shown to be inaccurate, documents shall be deemed filed on the date of personal delivery, on the send date shown on the facsimile (provided a confirmation copy is properly served), and, for mail delivery service, on the mailing date shown on the certificate of service, on the date shown on the postmark if there is no certificate of service, or on the mailing date shown by other evidence if there is no certificate of service and no postmark.

(b) *Number of copies.* An executed original and 3 copies of each document shall be filed with the Board. Copies need not be signed, but the name of the person signing the original shall be shown.

(c) *Form.* Petitions for review or appeals to the Board and appeals from initial decisions may be in the form of a letter to the Board signed by the petitioner or the party appealing and shall be typewritten or in legible handwriting.

(d) *Contents.* Each document shall contain a concise and complete statement of the facts relied upon and the relief sought.

(e) *Subscription.* The original of every document filed shall be signed by the person filing it or his or her duly authorized representative.

(f) *Designation of person to receive service.* The initial document filed shall state on the first page the name and post office address of the person or persons who may be served with documents in the proceeding.

(g) *Motions, requests, and documents.* All motions, requests, and documents in connection with petitions for review and appeals to the Board shall be filed with the chief law judge, until such time as he or she assigns a law judge to preside over the proceeding.

[40 FR 30243, July 17, 1975, as amended at 49 FR 28249, July 11, 1984; 56 FR 56172, Nov. 1, 1991; 59 FR 59046, Nov. 15, 1994]

§ 821.8 Service of documents.

(a) *Who must be served.* (1) Copies of all documents filed with the Board must be served on all parties to the proceeding by the person filing them. A certificate of service shall accompany all documents when they are tendered for filing and shall certify concurrent service on the Board and the parties. Certificates of service shall be in substantially the following form:

I hereby certify that I have this day served the foregoing document(s) on the following parties' counsel or designated representatives [or on the party, if without counsel or representative] at the address indicated by [specify the method of service: first class mail, personal service, etc.] [indicate names and addresses here]

Dated at _____, this _____ day of _____, 19_____.

(Signature)_____
For (on behalf of)_____''

(2) Service shall be made on the person designated in accordance with § 821.7(f) to receive service. If no such person has been designated, service shall be made on the party.

(b) *Method of service.* Except as set forth in paragraph (c) and (d) of this section and as required by § 821.57(b), the method of service is the same as that set forth in § 821.7(a) for filing of documents. The Board will serve orders, notices of hearing, and written initial decisions on attorneys or representatives designated under § 821.7(f) or, if no attorney or representative, on the party itself, and will do so by certified mail, except that service on the Administrator will be by first-class mail.

(c) *Where service shall be made.* Except for personal service, addresses for service of documents shall be those in the official record or, if none in the case of the Federal Aviation Administration, the Office of the Chief Counsel, Washington, DC 20591. In the case of an agent designated by an air carrier under 49 U.S.C. 46103(a), service of any sort may be accomplished only at the agent's office or usual place of residence.

(d) *Presumption of service.* There shall be a presumption of lawful service:

(1) When acknowledgement of receipt is by a person who customarily or in the ordinary course of business receives mail at the residence or principal place of business of the party or of the person designated under § 821.7(f); or

(2) When a properly addressed envelope, sent to the most current address in the official record by regular, registered, or certified mail, has been returned as undelivered, unclaimed, or refused.

(e) *Date of service.* The date of service shall be determined in the same manner as the filing date is determined under § 821.7(a).

[59 FR 59047, Nov. 15, 1994, as amended at 65 FR 42639, July 11, 2000]

§ 821.9 Intervention and amicus appearance.

(a) *Intervention.* Any person may move for leave to intervene in a proceeding and may become a party thereto, if it is found that such person may be bound by any order to be entered in the proceeding, or that such person has a property, financial, or other legitimate interest that will not be adequately represented by existing parties, and that such intervention will not unduly broaden the issues or delay the proceedings. Except for good cause shown, no motion for leave to intervene will be entertained if filed less than 10 days prior to hearing. The extent to which an intervenor may participate in the proceedings is within the law judge's discretion, and depends on the above criteria.

(b) *Amicus curiae briefs.* A brief of *amicus curiae* in matters on appeal from initial decisions may be filed if accompanied by written consent of all the parties, or if, in the opinion of the Board's General Counsel, the brief will not unduly broaden the matters at issue or unduly prejudice any party to the litigation. A brief may be conditionally filed with motion for leave. The motion shall identify the interest of the movant and shall state the reasons why a brief of *amicus curiae* is desirable. Such brief and motion shall be filed within the time allowed the party whose position as to affirmance or reversal the brief would support, unless cause for late filing is shown, in which event the General Counsel may provide an opportunity for response as a condition of acceptance.

[59 FR 59047, Nov. 15, 1994]

§ 821.10 Computation of time.

In computing any period of time prescribed or allowed by this part, by notice or order of the Board or a law judge, or by any applicable statute, the date of the act, event, or default after which the designated period of time begins to run is not to be included in the computation. The last day of the period so computed is to be included unless it is a Saturday, Sunday, or legal holiday for the Board, in which event the period runs until the end of the next day which is neither a Saturday,

Sunday, nor legal holiday. In all cases, Saturdays, Sundays, and legal holidays for the Board shall be included in the computation of time, except they shall not be included in computations of time respecting petitions for review of determinations as to the existence of emergencies under § 821.54 in subpart I of this part.

[65 FR 42639, July 11, 2000]

§ 821.11 Extension of time.

(a) Upon written request filed with the Board and served on all parties, or by oral request with any extension granted confirmed in writing and served on all parties, and for good cause shown, the chief judge, the law judge, or the Board may grant an extension of time to file any document except a petition for reconsideration.

(b) The Board's General Counsel is authorized to grant unopposed extensions on timely oral request without a showing of good cause in cases appealed to the Board from a decision of a law judge. Written confirmation of such a grant must promptly be sent by the requesting party to the Board and served on other parties.

(c) Extensions of time to file petitions for reconsideration will be granted only in extraordinary circumstances.

[59 FR 59047, Nov. 15, 1994]

§ 821.12 Amendment and withdrawal of pleadings.

(a) *Amendment.* At any time more than 15 days prior to the hearing, a party may amend his or her pleadings by filing the amended pleading with the Board and serving copies on the other parties. After that time, amendment shall be allowed only at the discretion of the law judge. In the case of amendment to an answerable pleading, the law judge shall allow the adverse party a reasonable time to object or answer. Amendments to complaints shall be consistent with the requirements of 49 U.S.C. 44709(c) and 44710(c).

(b) *Withdrawal.* Except in the case of withdrawal of an appeal to the Board, withdrawal of a petition for review, withdrawal of a complaint, or withdrawal of an appeal from an initial decision, a party may withdraw pleadings only on approval of a law judge or the Board.

[59 FR 59047, Nov. 15, 1994]

§ 821.13 Waivers.

Waivers of any rights provided by statute or regulation shall either be in writing, or by stipulation made at a hearing and entered into the record, and shall set forth their precise terms and conditions.

§ 821.14 Motions.

(a) *General.* An application to the Board or to a law judge for an order or ruling not otherwise provided for in this part shall be by motion. Prior to the assignment of a law judge, all motions shall be addressed to the chief law judge. Thereafter, and prior to the expiration of the period within which an appeal from the law judge's initial decision may be filed, or the certification of the record to the Board, all motions shall be addressed to the law judge. At all other times, motions shall be addressed to the Board, Office of General Counsel. All motions not specifically provided for in any other section of this part shall be made at an appropriate time, depending on the nature thereof and the relief requested.

(b) *Form and contents.* Unless made during a hearing, motions shall be made in writing, shall state with particularity the grounds for the relief sought, and the relief sought, and shall be accompanied by affidavits or other evidence relied upon. Motions introduced during hearings may be made orally on the record, unless the law judge directs otherwise.

(c) *Answers to motions.* Except when a motion is made during a hearing, any party may file an answer in support of or in opposition to a motion, accompanied by such affidavits or other evidence as he or she desires to rely upon, provided that the answer is filed with 15 days after the motion has been served upon him or her, or such other period as the Board or a law judge may fix. Where a motion is made during a hearing, the answer and the ruling thereon may be made at the hearing, or orally or in writing within such time as the law judge may fix.

(d) *Oral argument; briefs.* No oral argument will be heard on motions unless the Board or the law judge directs otherwise. Written memoranda or briefs may be filed with motions or answers to motions, stating the points and authorities relied upon in support of the positions taken.

(e) *Disposition of motions.* Except as provided in paragraph (c) of this section for rulings on motions made at a hearing, the law judge shall pass upon all motions properly addressed to him or her, unless he or she finds that a prompt decision by the Board is essential to the proper conduct of the proceeding, in which case he or she may refer such motion to the Board for decision.

(f) *Effect of pendency of motions.* Except as provided in §§ 821.17(a) and 821.18, the filing or pendency of a motion shall not automatically alter or extend the time fixed in this part (or any extension granted thereunder) to take action by the parties.

[40 FR 30243, July 17, 1975, as amended at 54 FR 12203, Mar. 24, 1989; 59 FR 59047, Nov. 15, 1994]

§ 821.15 Motion to disqualify a Board Member.

A motion requesting a Board Member to disqualify himself shall be filed with the Board, supported by an affidavit setting forth grounds for disqualification. In nonemergency proceedings, where an appeal from an initial decision is filed, such motion shall be filed on or before the date on which the reply brief is due, pursuant to § 821.48(d). In emergency proceedings, where a notice of appeal has been filed, such motion shall be filed on or before the date the reply brief is due, pursuant to § 821.57(b). Failure to file a timely motion shall be deemed a waiver of any claim of disqualification. Application for leave to file an untimely motion may be made, accompanied by an affidavit setting forth in detail why the facts relied upon as grounds for disqualification were not known and could not have been discovered with reasonable diligence within the prescribed time.

§ 821.16 Appeals from law judge's interlocutory rulings and motions.

Rulings of law judges on motions may not be appealed to the Board prior to its consideration of the entire proceeding, except in extraordinary circumstances and with the consent of the law judge who made the ruling. An appeal shall be disallowed unless the law judge finds, either on the record or in writing, that to allow such an appeal is necessary to prevent substantial detriment to the public interest or undue prejudice to any party. If an appeal is allowed, any party may file a brief with the Board within such time as the law judge directs. No oral argument will be heard unless the Board directs otherwise. The rulings of the law judge on motion may be reviewed by the Board in connection with its appellate action in the proceeding, irrespective of the filing of an appeal from the motion or any action taken thereon.

§ 821.17 Motion to dismiss and for judgment on the pleadings.

(a) *General.* A motion to dismiss may be filed within the time limitation for filing an answer, except as otherwise provided in paragraph (d) of this section. If the motion is not granted in its entirety, the answer shall be filed within 10 days of service of the law judge's order on the motion.

(b) *Judgment on the pleadings.* A party may file a motion for judgment on the pleadings where no answer has been filed or where there are no issues to be resolved.

(c) *Appeal of dismissal orders and grants of motions for judgment on the pleadings.* When a law judge grants a motion for judgment on the pleadings or a motion to dismiss in lieu of an answer and terminates the proceeding without a hearing, an appeal of such order to the Board may be filed pursuant to the provisions of § 821.47. When a law judge grants a motion to dismiss in part, § 821.16 is applicable.

(d) *Motions to dismiss for lack of jurisdiction.* A motion to dismiss on the ground that the Board lacks jurisdiction may be made at any time.

[49 FR 28249, July 11, 1984]

§ 821.18 Motion for more definite statement.

(a) A party, in lieu of an answer, may file a motion requesting that the allegations in the complaint or the petition be made more definite and certain. The motion shall point out the defects complained of and the details desired. If the motion is granted and the law judge's order is not complied with within 15 days after notice, the law judge shall strike the allegation or allegations in any complaint or petition to which the motion is directed. If the motion is denied, the moving party shall file an answer within 10 days after the denial.

(b) A party may file a motion to clarify an answer in the event that it fails to respond clearly either to the complaint or to the petition for review. Such a motion may be granted at the discretion of the law judge.

[49 FR 28249, July 11, 1984]

§ 821.19 Depositions and other discovery.

(a) *Initiation of discovery*. After a petition for review or a complaint is filed, any party may take the testimony of any person, including a party, by deposition, upon oral examination or written questions, without seeking prior Board approval. Reasonable notice shall be given in writing to the other parties of record stating the name of the witness and the time and place of the taking of the deposition. A copy of any notice of deposition shall be served on the Office of Administrative Law Judges. In other respects, the taking of any deposition shall be in compliance with the provisions of 49 U.S.C. 46104.

(b) *Exchange of information by parties*. At any time before hearing, at the instance of either party, the parties or their representatives may exchange information, such as witness lists, exhibit lists, curricula vitae and bibliographies of expert witnesses, and other data. In the event of a dispute, either the assigned law judge or another law judge delegated this responsibility (if a law judge has not yet been assigned) may issue an order directing compliance with any ruling made with respect to discovery. Any party may also use written interrogatories, requests to admit, or other discovery tools. Copies of discovery requests and responses shall be served on the law judge assigned to the proceeding.

(c) *Use of the Federal Rules of Civil Procedure*. Those portions of the Federal Rules of Civil Procedure that pertain to depositions and discovery may be used as a general guide for discovery practice in proceedings before the Board where appropriate. The Federal Rules and the case law that construes them shall be considered by the Board and its law judges as instructive rather than controlling.

(d) *Failure to provide or preserve evidence*. The failure of any party to comply with an order of an administrative law judge compelling discovery or to cooperate in a timely request for the preservation of evidence may result in a negative inference against that party with respect to the matter sought and not provided or preserved, a preclusion order, or dismissal.

[49 FR 28250, July 11, 1984, as amended at 59 FR 59047, Nov. 15, 1994; 65 FR 42639, July 11, 2000]

§ 821.20 Subpoenas, witness fees, and appearances of Board Members, officers, or employees.

(a) *Subpoenas*. Subpoenas requiring the attendance of witnesses or the production of documentary or tangible evidence for the purpose of taking depositions or at a hearing may be issued by the chief law judge prior to the assignment of a law judge, or by the law judge to whom the case is assigned, upon application by any party. The application shall show the general relevance and reasonable scope of the evidence sought. Any person upon whom a subpoena is served may, within 7 days after service but in any event prior to the return date thereof, file with the chief law judge or the law judge, as the case may be, a motion to quash or modify the subpoena, and such filing shall stay the subpoena pending final action by the chief law judge or the law judge on the motion.

(b) *Witness fees*. Witnesses shall be entitled to the same fees and mileage as are paid to witnesses in the courts of the United States. The fees shall be paid by the party at whose instance the witness is subpoenaed or appears. The

Board may decline to process a proceeding further should a party fail to compensate a witness pursuant to this paragraph.

(c) *Board Members, officers, or employees.* In order to encourage a free flow of information to the Board's accident investigators, the Board disfavors the use of its personnel in enforcement proceedings. Therefore, the provisions of paragraph (a) of this section are not applicable to Board Members, officers, or employees, or the production of documents in their custody. Applications for the attendance of such persons or the production of such documents at hearing shall be addressed to the chief law judge or the assigned law judge, as the case may be, in writing, and shall set forth the need of the moving party for such testimony, and a showing that such testimony is not now, or was not otherwise, reasonably available from other sources. The law judge shall not permit such testimony or documentary evidence to include any opinion testimony, or any account of statements of a respondent, made during the Board's investigation of any accident.

[40 FR 30243, July 17, 1975, as amended at 59 FR 59048, Nov. 15, 1994]

§ 821.21 Official notice.

Where the law judge or the Board intends to take official notice of a material fact not appearing in the evidence in the record, notice shall be given to all parties, who may within 10 days file a petition challenging such fact. Upon the filing of such petition, the party or parties shall be given reasonable opportunity to controvert the fact.

Subpart C—Special Rules Applicable to Proceedings Under 49 U.S.C. 44709

§ 821.24 Initiation of proceedings.

(a) *Petition for review.* Where the Administrator has denied an application for the issuance or renewal of an airman certificate, the applicant may file with the Board a petition for review of the Administrator's action within 60 days from the time the Administrator's action was served on petitioner. The petition shall contain a short statement of the facts on which petitioner's case depends and a statement of the requested action, and may be in letter form.

(b) *Filing petition with the Board.* The petition for review shall be filed with the Board and the date of filing shall be determined in the same manner as prescribed by § 821.7(a) for other documents.

(c) *Answer to petition.* The Administrator shall file an answer to the petition for review within 20 days of service upon him or her by the petitioner of the petition for review. Failure to deny the truth of any allegation or allegations of the petition may be deemed an admission of the truth of the allegation or allegations not answered.

(d) *Stay of proceeding pending request for special issuance (restricted certificate).* The Board lacks authority to review special issuances, or to direct that they be issued. Where a request for special issuance (restricted certificate) has been filed with the Administrator pursuant to the Federal Aviation Regulations, the Board will hold a petition for review in abeyance pending final action by the Administrator or for 180 days from the date of the Administrator's initial certificate denial, whichever occurs first.

(e) *New evidence.* If petitioner has undergone medical testing or evaluation in addition to that already submitted or known to the Administrator, and wishes to introduce the results into the record, the new medical evidence must be served on the Administrator at least 30 days before the hearing. Absent good cause, failure timely to serve any new evidence will result in its exclusion from the record. The Administrator may amend his or her answer within 10 days from the date the new evidence is served to respond to such new evidence.

[40 FR 30243, July 17, 1975, as amended at 43 FR 60473, Dec. 28, 1978; 49 FR 28250, July 11, 1984, 59 FR 59048, Nov. 15, 1994]

§ 821.25 Burden of proof.

In proceedings under 49 U.S.C. 44709, the burden of proof shall be upon the petitioner.

[40 FR 30243, July 17, 1975, as amended at 65 FR 42639, July 11, 2000]

§ 821.26 Motion to dismiss petition for review for lack of standing.

Upon motion by the Administrator within the time limitation for filing an answer, a petition for review shall be dismissed for lack of standing in either of the following instances:

(a) If the petitioner's certificate at the time of the denial or renewal thereof was under an order of suspension; or

(b) If the petitioner's certificate had been revoked within one year of the date of the denial or renewal thereof, unless the order revoking such certificate provided otherwise.

Subpart D—Special Rules Applicable to Proceedings Under 49 U.S.C. 44709

§ 821.30 Initiation of proceedings.

(a) *Appeal.* A certificate holder may file with the Board an appeal from an order of the Administrator amending, modifying, suspending, or revoking a certificate. The appeal shall be filed with the Board within 20 days from the time of service of the order and be accompanied with proof of service on the Administrator.

(b) *Contents.* Each appeal shall contain a concise but complete statement of the facts relied on and the relief sought. It shall identify the Administrator's order and any certificate affected and shall recite the Administrator's action from which the appeal is sought. It shall also contain proof of service on the Administrator.

(c) *Effect of timely appeal with the Board.* Timely filing with the Board of an appeal from an order of the Administrator shall postpone the effective date of the order until final disposition of the appeal by the law judge or the Board, except in emergency proceedings.

[58 FR 11381, Feb. 25, 1993, as amended at 59 FR 59048, Nov. 15, 1994]

§ 821.31 Complaint procedure.

(a) *Filing, time of filing, and service on respondent.* The order of the Administrator from which an appeal has been taken shall serve as the complaint. The complaint shall be filed by the Administrator with the Board within 10 days after the service date of the notice of appeal.

(b) *Contents of complaint.* If the Administrator claims that respondent lacks qualification as an airman, the order filed as the complaint, or an accompanying statement shall recite on which of the facts pleaded this contention is based.

(c) *Answer to complaint.* The respondent shall file an answer to the complaint within 20 days of service of the complaint upon him or her by the Administrator. Failure to deny the truth of any allegation or allegations in the complaint may be deemed an admission of the truth of the allegation or allegations not answered. Respondent's answer shall also include any affirmative defense that respondent intends to raise at the hearing. A respondent may amend his or her answer to include any affirmative defense in accordance with the requirements of § 821.12(a). In the discretion of the law judge, any affirmative defense not so pleaded may be deemed waived.

[40 FR 30243, July 17, 1975, as amended at 49 FR 28250, July 11, 1984, 59 FR 59048, Nov. 15, 1994]

§ 821.32 Burden of proof.

In proceedings under 49 U.S.C. 44709, the burden of proof shall be upon the Administrator.

[40 FR 30243, July 17, 1975, as amended at 65 FR 42639, July 11, 2000

§ 821.33 Motion to dismiss stale complaint.

Where the complaint states allegations of offenses which occurred more than 6 months prior to the Administrator's advising respondent as to reasons for proposed action under 49 U.S.C. 44709, respondent may move to dismiss such allegations pursuant to the following provisions:

(a) In those cases where a complaint does not allege lack of qualification of the certificate holder:

(1) The Administrator shall be required to show by answer filed within 15 days of service of the motion that good cause existed for the delay, or that the imposition of a sanction is warranted in the public interest, notwithstanding the delay or the reasons therefor.

(2) If the Administrator does not establish good cause for the delay or for imposition of a sanction notwithstanding the delay, the law judge shall dismiss the stale allegations and proceed to adjudicate only the remaining portion, if any, of the complaint.

(3) If the law judge wishes some clarification as to the Administrator's factual assertions of good cause, he or she shall obtain this from the Administrator in writing, with due service made upon the respondent, and proceed to an informal determination of the good cause issue without a hearing. A hearing to develop facts as to good cause shall be held only where the respondent raises an issue of fact in respect of the Administrator's good cause issue allegations.

(b) In those cases where the complaint alleges lack of qualification of the certificate holder:

(1) The law judge shall first determine whether an issue of lack of qualification would be presented if any or all of the allegations, stale and timely, are assumed to be true. If not, the law judge shall proceed as in paragraph (a) of this section.

(2) If the law judge deems that an issue of lack of qualification would be presented by any or all of the allegations, if true, he or she shall proceed to a hearing on the lack of qualification issue only, and he or she shall so inform the parties. The respondent shall be put on notice that he or she is to defend against lack of qualification and not merely against a proposed remedial sanction.

[40 FR 30243, July 17, 1975, as amended at 54 FR 12203, Mar. 24, 1989; 65 FR 42639, July 11, 2000]

Subpart E—Law Judges

§ 821.35 Assignment, duties, and powers.

(a) *Assignment of law judge and duration of assignment.* The chief law judge shall assign a law judge to preside over the proceeding. Until such assignment, motions, requests, and documents shall be addressed to the Docket Section, Office of Administrative Law Judges, for handling by the chief law judge, who may handle these matters personally or who may delegate all or any of them to other law judges for decision. After assignment, all motions, requests, and documents shall be addressed to that law judge. The authority of the assigned law judge shall terminate upon certification of the record to the Board, or upon expiration of the period within which appeals from initial decisions may be filed, or upon the law judge's withdrawal from the proceeding.

(b) *Powers of law judges.* Law judges shall have the following powers:

(1) To give notice of and to hold prehearing conferences and hearings and to consolidate proceedings which involve a common question of law or fact;

(2) To administer oaths and affirmations;

(3) To examine witnesses;

(4) To issue subpoenas and to take or cause depositions to be taken;

(5) To receive evidence and rule upon objections and offers of proof;

(6) To rule upon motions in assigned cases;

(7) To regulate the conduct of the hearing;

(8) To hold conferences, before or during the hearing for the settlement or simplification of issues;

(9) To dispose of procedural requests or similar matters; and

(10) To make initial decisions, and, if so directed by the Board, to certify records with or without recommended decisions.

(c) *Disqualification of a law judge.* A law judge shall withdraw from the proceedings if at any time he or she deems himself disqualified. If, prior to the initial decision, there is filed an affidavit of personal bias or disqualifications, with substantiating facts, and the law judge does not withdraw, the Board will determine the matter as a part of the record and decision in the proceeding, if an appeal from the law judge's initial decision is filed. The Board will not otherwise consider any claim of bias or disqualification as to the law judge's assignment to conduct the hearing. The Board, in its discretion, may order a hearing on a charge of bias or disqualification.

[40 FR 30243, July 17, 1975, as amended at 59 FR 59048, Nov. 15, 1994]

Subpart F—Hearings

§ 821.37 Notice of hearing.

(a) *Notice.* The chief law judge (or his or her law judge delegate) or the law judge to whom the case is assigned shall set a reasonable date, time and place for the hearing. The notice of the hearing shall be served at least 30 days in advance thereof, and shall include notice of the nature of the hearing. The law judge may set the hearing fewer than 30 days after the notice of hearing is served if the parties agree to an earlier hearing date. In setting the hearing date, due regard shall be given to any need for discovery. In setting the place of the hearing, due regard shall be given to the convenience of the parties and to conservation of Board funds. The location of the witnesses and the suitability of a site served by a scheduled air carrier are added factors to be considered in setting the hearing location, as is Board policy that foreign-held hearings are appropriate only in the most extraordinary circumstances.

(b) *Hearings in several sessions.* Where appropriate, the law judge may determine that a hearing will be held in one or more sessions at the same or different places.

[40 FR 30243, July 17, 1975, as amended at 49 FR 28250, July 11, 1984, 59 FR 59048, Nov. 15, 1994]

§ 821.38 Evidence.

(a) Every party shall have the right to present a case-in-chief or defense by oral or documentary evidence, to submit evidence in rebuttal, and to conduct such cross-examination as may be required for a full and true disclosure of the facts. Hearsay evidence (including hearsay within hearsay where there are acceptable circumstantial indicia of trustworthiness) is admissible.

(b) All material and relevant evidence should be admitted, but a law judge may exclude unduly repetitious evidence pursuant to 5 U.S.C. 556(d) (Administrative Procedure). Any evidence that is offered and excluded may be described (via an ''offer of proof''), and that description should be made a part of the record.

[59 FR 59048, Nov. 15, 1994, as amended at 65 FR 42639, July 11, 2000]

§ 821.39 Argument and submissions.

At the hearing, the law judge shall give the parties adequate opportunity for the presentation of arguments in support of, or in opposition to, motions, objections, and rulings. Prior to the initial decision, the parties shall be afforded a reasonable opportunity to submit for consideration proposed findings and conclusions and supporting reasons therefor.

§ 821.40 Record.

The transcript of testimony and exhibits, together with all papers, requests, and rulings filed in the proceeding shall constitute the exclusive record of the proceeding. The record shall also include any proceeding upon an affidavit of personal bias or disqualification of a law judge. Copies of the transcript may be obtained by any party upon payment of the reasonable cost thereof. A copy may be examined at the National Transportation Safety Board Public Reference Room No. 806D, at 800 Independence Avenue, SW., Washington, DC 20594.

§ 821.41 Certification to the Board.

At any time prior to the close of the hearing, the Board may direct the law judge to certify any question or the entire record in the proceeding to the Board for decision, except an interlocutory ruling. In cases where the record is certified to the Board, the law judge shall not render an initial decision but shall only recommend to the Board a decision as provided in 5 U.S.C. 557 (Administrative Procedure).

Subpart G—Initial Decision

§ 821.42 Initial decision by law judge.

(a) *Written or oral decision.* The law judge may render his or her initial decision orally at the close of the hearing, or he or she may render such decision in writing at a later date, except as provided in § 821.56(b).

(b) *Contents.* The initial decision shall include a statement of findings

and conclusions, and the grounds therefor, upon all material issues of fact, credibility of witnesses, law, or discretion presented on the record, the appropriate order, and the reasons therefor.

(c) *Furnishing copy of oral decision and issuance date.* If the initial decision is rendered orally, a copy thereof, excerpted from the transcript of the record, shall be furnished the parties by the Office of Administrative Law Judges. Irrespective of the date of mailing of such copy, the issuance date of the decision shall be the actual date of the rendering of the oral decision.

[40 FR 30243, July 17, 1975, as amended at 59 FR 59049, Nov. 15, 1994]

§ 821.43 Effect of law judge's initial decision and filing of an appeal therefrom.

If an appeal from the initial decision is not timely filed with the Board by a party, the initial decision shall become final but shall not be precedent binding on the Board. The filing of a timely appeal shall stay the initial decision.

[59 FR 59049, Nov. 15, 1994]

Subpart H—Appeals from Initial Decisions

§ 821.47 Notice of appeal.

(a) A party may appeal from a law judge's order or from the initial decision by filing with the Board and serving on the other parties (pursuant to § 821.8) a notice of appeal within 10 days after an oral initial decision has been rendered or a written decision or a final or appealable (see § 821.16) order has been served. At any time before the date for filing an appeal from an initial decision or order has passed, the law judge or the Board may, for good cause shown, extend the time within which to file an appeal, and the law judge may also reopen the case for good cause on notice to the parties.

(b) A law judge may not reconsider his or her initial decision once the time for appealing to the Board from the initial decision has expired or once an appeal with the Board has been filed. However, a timely request for reconsideration by the law judge of his or her decision, filed before an appeal to the Board has been taken, will stay the deadline for appealing to the Board until 10 days after the date the law judge serves his or her decision on the request. For the purpose of this section, a request for reconsideration submitted on the same date as a notice of appeal will be deemed to have been filed first.

[59 FR 59049, Nov. 15, 1994]

§ 821.48 Briefs and oral argument.

(a) *Appeal briefs.* Each appeal must be perfected within 50 days after an oral initial decision has been rendered, or 30 days after service of a written initial decision, by filing with the Board and serving on the other party a brief in support of the appeal. Appeals may be dismissed by the Board on its own initiative or on motion of the other party, in cases where a party who has filed a notice of appeal fails to perfect his or her appeal by filing a timely brief.

(b) *Contents of appeal brief.* Each appeal brief shall set forth in detail the objections to the initial decision, and shall state whether such objections are related to alleged errors in the law judge's findings of fact and conclusions or alleged errors in his or her order. It shall also state the reasons for such objections and the relief requested.

(c) *Waiver of objections on appeal.* Any error contained in the initial decision which is not objected to may be deemed to have been waived. Where any objection is based upon evidence of record, such objection need not be considered by the Board unless specific record citations to the pertinent evidence are furnished in the appeal brief.

(d) *Reply brief.* A brief in reply to the appeal brief may be filed by the other party within 30 days after the appeal brief has been served upon him or her. A copy of the reply brief shall be served upon the party who has appealed from the initial decision. Where the reply brief relies upon evidence of record, specific record citations to the pertinent evidence shall be furnished in the reply brief.

(e) *Other briefs.* Subsequent to brief filing, parties may file citations to supplemental authorities. This procedure may be used only for identifying new, relevant decisions, not to correct omissions in briefing or to respond to a

reply. No argument may be included in such filings. Parties shall submit, with any decision, a reference to the page of the brief to which the decision pertains. Any response shall be filed within 10 days and shall be similarly limited. With this exception, no further briefs may be filed, except with specific permission of the Board and on a showing of good cause.

(f) *Oral argument*. Oral argument before the Board will normally not be held in proceedings under this part. However, when need therefor appears, the Board may permit oral argument, either on its own initiative or on motion of a party.

[40 FR 30248, July 17, 1975, as amended at 49 FR 28250, July 11, 1984, 59 FR 59049, Nov. 15, 1994; 60 FR 25620, May 12, 1995]

§ 821.49 Issues on appeal.

(a) On appeal, the Board will consider only the following issues:

(1) Are the findings of fact each supported by a preponderance of reliable, probative, and substantial evidence?

(2) Are conclusions made in accordance with law, precedent, and policy?

(3) Are the questions on appeal substantial?

(4) Have any prejudicial errors occurred?

(b) If the Board determines that the law judge erred in any respect or that his or her order in his or her initial decision should be changed, the Board may make any necessary findings and may issue an order in lieu of the law judge's order or may remand the case for such purposes as the Board may deem necessary. The Board on its own initiative may raise any issue, the resolution of which it deems important to a proper disposition of the proceedings. If necessary or appropriate, a reasonable opportunity shall be afforded the parties to comment.

[59 FR 59049, Nov. 15, 1994]

§ 821.50 Petitions for rehearing, reargument, reconsideration, or modification of an order of the Board.

(a) *General*. Any party to a proceeding may petition for rehearing, reargument, reconsideration, or modification of a Board order on appeal from an initial decision. Any such petitions shall be served on all other parties to the proceeding within 30 days after service of the Board's order on appeal from the initial decision. Initial decisions that have become final because they were not appealed may not be the subject of petitions under this section.

(b) *Timing and service*. The petition shall be filed with the Board and served on the parties within 30 days after service of the Board's order on appeal from the initial decision.

(c) *Contents*. The petition shall state briefly and specifically the matters of record alleged to have been erroneously decided, the ground or grounds relied upon, and the relief sought. If the petition is based, in whole or in part, on allegations as to the consequences that would result from the order of the Board, the basis of such allegations shall be set forth. If the petition is based, in whole or in part, upon new matter, it shall set forth such new matter and shall contain affidavits of prospective witnesses, authenticated documents, or both, or an explanation why such substantiation is unavailable, and shall explain why such new matter could not have been discovered by the exercise of due diligence prior to the date of the hearing.

(d) *Grounds for dismissal*. Repetitious petitions will not be entertained by the Board and will be summarily dismissed.

(e) *Reply to petition*. Within 15 days after the service of the petition upon an adverse party, he or she may reply thereto by filing a copy of the reply with the Board, with proof of service upon the petitioner.

(f) *Stay of effective date of order*. The filing of a petition under this section shall operate to stay the effective date of the Board order, unless otherwise ordered by the Board.

[40 FR 30243, July 17, 1975, as amended at 54 FR 12203, Mar. 24, 1989; 59 FR 59049, Nov. 15, 1994]

Subpart I—Rules Applicable to Emergency Proceedings and Other Immediately Effective Orders

SOURCE: 65 FR 42639, July 11, 2000, unless otherwise noted.

§ 821.52 General.

(a) *Applicability*. This subpart shall apply to any order issued by the Administrator under 49 U.S.C. 44709: as an emergency order; as an order not designated as an emergency order, but later amended to be an emergency order; and any order designated as immediately effective or effective immediately.

(b) *Effective date of emergency*. The procedure set forth herein shall apply as of the date when written advice of the emergency character of the Administrator's order is first received and docketed by the Office of Administrative Law Judges or the Board.

(c) *Computation of time*. Time shall be computed in accordance with the provisions of § 821.10.

§ 821.53 Appeal.

(a) *Time within which to appeal*. The certificate holder may appeal within 10 days after the service of the Administrator's emergency or other immediately effective order. The certificate holder shall file an original and 3 copies of the appeal with the Office of Administrative Law Judges, and shall serve a copy of the appeal on the Administrator.

(b) *Form and content of appeal*. The appeal may be in letter form. It shall identify the Administrator's order and the certificate affected, shall recite the Administrator's action and indicate that an emergency or other immediately effective order is being appealed, and shall identify the issues of fact or law on which the appeal is based, and the relief sought. A copy of the order shall be attached to the appeal.

§ 821.54 Review of Administrator's determination of emergency.

(a) *Time within which to file petition*. The certificate holder may, within 2 days after receipt of the Administrator's emergency or other immediately effective order, petition the Board for review of the Administrator's determination that an emergency, requiring the issuance of an immediately effective order, exists. This 2 day deadline is statutory and the Board has no authority to extend it. If the certificate holder has not previously filed an appeal from the emergency or other immediately effective order, the petition shall also be considered a simultaneously filed appeal from the order under § 821.53.

(b) *Form, content, and service of petition*. The petition may be in letter form. It shall identify the order from which review of the Administrator's exercise of emergency authority is sought, and a copy of the order shall be attached to the petition. The petition shall enumerate the specific grounds on which the certificate holder challenges the Administrator's determination that an emergency exists. In the event that the petition fails to set forth the specific grounds for the certificate holder's challenge to the Administrator's emergency determination, the petition shall be dismissed. The petition shall be served on both the Board and the Administrator via overnight delivery or facsimile.

(c) *Reply to petition*. Within 2 days after service of the petition, the Administrator may file a reply to the petition in support of his or her determination as to the existence of an emergency requiring the order to be effective immediately. Such reply shall be served on both the Board and the certificate holder via overnight delivery or facsimile. No written submissions other than the petition and reply shall be filed, except in accordance with paragraph (d) of this section.

(d) *Hearing*. No hearing shall be held on a petition for review of an emergency determination. However, a law judge may, on his or her own initiative, solicit from the parties additional information to supplement that provided in the petition and reply.

(e) *Disposition*. Within 5 days after receipt of the petition, the chief judge (or, if the case has been assigned, the law judge to whom the case is assigned) shall dispose of the petition by written order, finding whether the Administrator abused his or her discretion in determining that there exists an emergency requiring the order to be immediately effective, based on the acts and omissions alleged in the Administrator's order, assuming the truth of such factual allegations.

(f) *Effect of law judge's ruling*. If the law judge grants the petition, the effectiveness of the Administrator's order will be stayed until final disposition of the respondent's appeal by the law judge or the Board. In such cases, the remaining provisions of this subpart (§§ 821.55–821.57) shall continue to apply, and their applicability may not be waived by the respondent without the consent of the Administrator. If the petition is denied, the Administrator's order shall remain in effect, and the remaining provisions of this subpart shall continue to apply, unless respondent waives their applicability. The law judge's ruling on the petition shall be final, and is not appealable to the Board.

§ 821.55 Complaint, answer to complaint, motions, and discovery.

(a) *Complaint*. Within 3 days after receipt of the appeal, or within 3 days after service of a law judge's order disposing of a petition for review of the Administrator's emergency determination, whichever is later, the Administrator shall file with the Board via overnight delivery or facsimile, an original and 3 copies of the emergency or other immediately effective order as the complaint, and serve a copy on the respondent by the same means.

(b) *Answer to the complaint*. Within 5 days after service of the complaint upon respondent, he or she shall file an answer thereto, and serve a copy of the answer on the Administrator. Failure to deny any allegation or allegations of the complaint may be deemed an admission of the allegation or allegations not answered.

(c) *Motion to dismiss and motion for more definite statement*. No motion to dismiss or for a more definite statement shall be made, but the substance thereof may be stated in the respondent's answer. The law judge may permit or require a more definite statement or other amendment to any pleading at the hearing, upon good cause shown and upon just and reasonable terms.

(d) *Discovery*. Discovery is authorized in emergency or other immediately effective proceedings, and, given the short time available, parties are directed to cooperate to ensure timely completion prior to the hearing. Discovery requests shall be served as soon as possible after initiation of the proceeding. Motions to compel production shall be expeditiously filed, and will be promptly decided. Time limits for compliance with discovery requests shall accommodate and not conflict with the schedule set forth in this subpart. The provisions at § 821.19 shall apply, modified as necessary to reflect applicable deadlines.

§ 821.56 Hearing and initial decision.

(a) *Notice of hearing*. Within 5 days of the receipt of respondent's appeal, or immediately upon the issuance of a law judge's order disposing of a petition for review of the Administrator's emergency determination (if later), the parties will be notified of the date, time and place of the hearing. The hearing shall be set for a date no later than 30 days after the filing of the appeal. To the extent not inconsistent with this section, the provisions of § 821.37(a) also apply.

(b) *Initial decision*. The initial decision shall be made orally on the record at the termination of the hearing and after opportunity for oral argument. The provisions of § 821.42(b) and (d) shall be applicable (covering content, furnishing a copy of the initial decision excerpted from the record, and issuance date).

(c) *Conduct of hearing*. The provisions of §§ 821.38, 821.39, and 821.40, covering evidence, argument and submissions, and record, shall be applicable.

(d) *Effect of law judge's initial decision*. If no appeal to the Board by either party, by motion or otherwise, is filed within the time allowed, the law judge's initial decision shall become final but shall not be deemed to be a precedent binding on the Board.

§ 821.57 Procedure on appeal.

(a) *Time within which to file a notice of appeal and content*. Within 2 days after the initial decision has been orally rendered, either party to the proceeding may appeal therefrom by filing with the Board and serving upon the other parties a notice of appeal. The time limitations for the filing of documents are not extended by the unavailability of the hearing transcript.

(b) *Briefs and oral argument.* Unless otherwise authorized by the Board, all briefs in emergency cases shall be served via overnight delivery or facsimile confirmed by first-class mail. Within 5 days after the filing of the notice of appeal, the appellant shall file a brief with the Board and serve a copy on the other parties. Within 7 days after service of the appeal brief, a reply brief may be filed, with copies served (as provided above) on other parties. The briefs shall comply with the requirements of § 821.48 (b) through (g). Appeals may be dismissed by the Board on its own initiative or on motion of a party, notably in cases where a party fails to perfect the notice of appeal by filing a timely brief. When a request for oral argument is granted, the Board will give notice of such argument.

(c) *Issues on appeal.* The provisions of § 821.49 shall apply to issues on appeal. However, the Board may upon its own initiative raise any issue, the resolution of which it deems important to a proper disposition of the proceeding. If necessary or appropriate, the parties shall be afforded a reasonable opportunity to comment.

(d) *Petitions for reconsideration, rehearing, reargument, or modification of order.* The only petitions for reconsideration, rehearing, reargument, or modification of an order which the Board will entertain are petitions based on the ground that new matter has been discovered. Such petitions must set forth the following:

(1) The new matter;

(2) Affidavits of prospective witnesses, authenticated documents, or both, or an explanation of why such substantiation is unavailable; and

(3) A statement that such new matter could not have been discovered by the exercise of due diligence prior to the date the case was submitted to the Board.

Subpart J—Ex Parte Communications

AUTHORITY: Sec. 4, Government in the Sunshine Act, Pub. L. 94–409, amending 5 U.S.C. 556(d) and 5 U.S.C. 557; Title VI, Federal Aviation Act of 1958, as amended, 49 U.S.C. 1421 et seq.; Independent Safety Board Act of 1974, Pub. L. 93–633, 88 Stat. 2166 (49 U.S.C. 1901 *et seq.).*

SOURCE: 42 FR 21613, Apr. 28, 1977, unless otherwise noted.

§ 821.60 Definitions.

As used in this subpart:

Board decisional employee means a Board Member, administrative law judge, or other employee who is or who may reasonably be expected to be involved in the decisional process of the proceeding;

Ex parte communication means an oral or written communication not on the public record with respect to which reasonable prior notice to all parties is not given, but it shall not include requests for status reports on any matter or proceeding covered by this part.

§ 821.61 Prohibited ex parte communications.

(a) The prohibitions of this section shall apply from the time a proceeding is noticed for hearing unless the person responsible for the communication has knowledge that it will be noticed, in which case the prohibitions shall apply at the time of the acquisition of such knowledge.

(b) Except to the extent required for the disposition of ex parte matters as authorized by law:

(1) No interested person outside the Board shall make or knowingly cause to be made to any Board employee an ex parte communication relevant to the merits of the proceeding;

(2) No Board employee shall make or knowingly cause to be made to any interested person outside the Board an ex parte communication relevant to the merits of the proceeding.

Ex parte communications regarding solely matters of board procedure or practice are not prohibited by this section.

§ 821.62 Procedures for handling ex parte communication.

A Board employee who receives or who makes or knowingly causes to be made a communication prohibited by § 821.61 shall place on the public record of the proceeding:

(a) All such written communications;

(b) Memoranda stating the substance of all such oral communications; and

(c) All written responses, and memoranda stating the substance of all oral responses, to the materials described in paragraphs (a) and (b) of this section.

§ 821.63 Requirement to show cause and imposition of sanction.

(a) Upon receipt of a communication knowingly made or knowingly caused to be made by a party in violation of § 821.61, the Board, administrative law judge, or other employee presiding at the hearing may, to the extent consistent with the interests of justice and the policy of the underlying statutes, require the party to show cause why his or her claim or interest in the proceeding should not be dismissed, denied, disregarded, or otherwise adversely affected on account of such violation.

(b) The Board may, to the extent consistent with the interests of justice and the policy of the underlying statutes it administers, consider a violation of this subpart sufficient grounds for a decision adverse to a party who has knowingly committed or knowingly caused a violation to occur. Alternatively, the Board may impose sanction, including suspension of the privilege of practice before the Board, on the party's attorney or representative, where an infraction has been committed by that attorney or representative and penalizing the party represented is not in the interest of justice.

[42 FR 21613, Apr. 28, 1977, as amended at 59 FR 59050, Nov. 15, 1994]

Subpart K—Judicial Review of Board Orders

§ 821.64 Judicial review.

(a) *General*. Judicial review of a final order of the Board may be sought as provided in 49 U.S.C. 1153 and 46110 by filing a petition for review with the appropriate United States court of appeals within 60 days of the date of entry (service date) of the Board's order. Under the Federal Aviation Act, as amended, any party may appeal the Board's decision. The Board itself does not typically participate in the judicial review of its action. In matters appealed by the FAA, respondents should anticipate the need to make their own defense.

(b) *Stay pending judicial review*. No petition for stay pending judicial review will be entertained if it is received by the Board after the effective date of the Board's order. If a stay action is to be timely, any petition must be filed sufficiently in advance of the effective date of the Board's order to allow for the possibility of a reply and to allow for Board review.

[59 FR 59050, Nov. 15, 1994, as amended at 65 FR 42641, July 11, 2000]

PART 825—RULES OF PROCEDURE FOR MERCHANT MARINE APPEALS FROM DECISIONS OF THE COMMANDANT, U.S. COAST GUARD

Sec.
825.1 Applicability.
825.5 Notice of appeal.
825.10 Referral of record.
825.15 Issues on appeal.
825.20 Briefs in support of appeal.
825.25 Oral argument.
825.30 Action by the Board.
825.35 Action after remand.
825.40 Ex parte communications.

AUTHORITY: Sec. 304(a)(9)(B), Independent Safety Board Act of 1974, Pub. L. 93–633, 88 Stat. 2169 (49 U.S.C. 1903(a)(9)(B)).

SOURCE: 40 FR 30248, July 17, 1975, unless otherwise noted.

§ 825.1 Applicability.

The provisions of this part govern all proceedings before the National Transportation Safety Board (Board) on appeals taken from decisions, on or after April 1, 1975, of the Commandant, U.S. Coast Guard, sustaining orders of an administrative law judge, revoking, suspending, or denying a license, certificate, document, or register in proceedings under:

(a) R.S. 4450, as amended (46 U.S.C. 239);

(b) Act of July 15, 1954 (46 U.S.C. 239a–b); or

(c) Section 4, Great Lakes Pilotage Act (46 U.S.C. 216(b)).

§ 825.5 Notice of appeal.

(a) A party may appeal from the Commandant's decision sustaining an

order of revocation, suspension, or denial of a license, certificate, document, or register in proceedings described in § 825.1, by filing a notice of appeal with the Board within 10 days after service of the Commandant's decision upon the party or his designated attorney. Upon good cause shown, the time for filing may be extended.

(b) Notice of appeal shall be addressed to the Docket Clerk, National Transportation Safety Board, Washington, DC 20594. At the same time, a copy shall be served on the Commandant (GL), U.S. Coast Guard, Washington, DC 20590.

(c) The notice of appeal shall state the name of the party, the number of the Commandant's decision, and, in brief, the grounds for the appeal.

§ 825.10 Referral of record.

Upon receipt of a notice of appeal, the Commandant shall immediately transmit to the Board the complete record of the hearing upon which his decision was based. This includes the charges, the transcript of testimony, and hearing proceedings (including exhibits), briefs filed by the party, the decision of the administrative law judge, and the Commandant's decision on appeal. It does not include intra-agency staff memoranda provided as advice to the Commandant to aid in his decision.

§ 825.15 Issues on appeal.

The only issues that may be considered on appeal are:

(a) A finding of a material fact is erroneous;

(b) A necessary legal conclusion is without governing precedent or is a departure from or contrary to law or precedent;

(c) A substantial and important question of law, policy, or discretion is involved; or

(d) A prejudicial procedural error has occurred.

§ 825.20 Briefs in support of appeal.

(a) Within 20 days after the filing of a notice of appeal, the appellant must file, in the same manner as prescribed for the notice in § 825.5, a brief in support of the appeal.

(b) This document shall set forth:

(1) The name and address of the appellant;

(2) The number and a description of the license, certificate, document, or register involved;

(3) A summary of the charges affirmed by the Commandant as proved;

(4) Fact findings by the Commandant disputed by the appellant;

(5) Specific statements of errors of laws asserted;

(6) Specific statements of any abuse of discretion asserted; and

(7) The relief requested.

(c) Objection based upon evidence of record need not be considered unless the appeal contains specific record citation to the pertinent evidence.

(d) When a brief has been filed by appellant under this section, the Coast Guard may, within 15 days of service of the brief on the Commandant, submit to the Board a reply brief.

(e) If a party who has filed a notice of appeal does not perfect the appeal by the timely filing of an appeal brief, the Board may dismiss the appeal on its own initiative or on motion of the Coast Guard.

§ 825.25 Oral argument.

(a) If any party desires to argue a case orally before the Board, he should request leave to make such argument in his brief filed pursuant to § 825.20.

(b) Oral argument before the Board will normally not be granted unless the Board finds good cause for such argument. If granted, the parties will be advised of the date.

§ 825.30 Action by the Board.

(a) On review by the Board, if no reversible error is found in the Commandant's decision on appeal, that decision will be affirmed.

(b) On review by the Board, if reversible error is found in the Commandant's decision on appeal, the Board may:

(1) Set aside the entire decision and dismiss the charges if it finds the error incurable; or

(2) Set aside the order, or conclusions, or findings of the Commandant and remand the case to him for further consideration if it finds the error curable.

(c) When a matter has been remanded to the Commandant under paragraph (b) of this section, the Commandant may act in accordance with the terms of the order of remand, or he may, as appropriate, further remand the matter to the administrative law judge of the Coast Guard who heard the case, or to another administrative law judge of the Coast Guard, with appropriate directions.

§ 825.35 Action after remand.

When a case has been remanded under § 825.30, a party shall retain all rights of review under 46 CFR part 5 and this part, as applicable.

§ 825.40 Ex parte communications.

(a) As used in this section:

Board decisional employee means a Board Member or employee who is or who may reasonably be expected to be involved in the decisional process of the proceeding;

Ex parte communication means an oral or written communication not on the public record with respect to which reasonable prior notice to all parties is not given, but it shall not include requests for status reports on any matter or proceeding covered by this part.

(b) The prohibition of paragraph (c) of this section shall apply from the time a proceeding is noticed for hearing unless the person responsible for the communication has knowledge that it will be noticed, in which case the prohibition shall apply at the time of the acquisition of such knowledge.

(c) Except to the extent required for the disposition of ex parte matters as authorized by law:

(1) No interested person outside the Board shall make or knowingly cause to be made to any Board employee an ex parte communication relevant to the merits of the proceeding;

(2) No Board employee shall make or knowingly cause to be made to any interested person outside the Board an ex parte communication relevant to the merits of the proceeding.

Ex parte communications regarding solely matters of Board procedure or practice are not prohibited by this paragraph.

(d) A Board employee who receives or who makes or knowingly causes to be made a communication prohibited by paragraph (c) of this section, shall place on the public record of the proceeding:

(1) All such written communications;

(2) Memoranda stating the substance of all such oral communication; and

(3) All written responses, and memoranda stating the substance of all oral responses, to materials described in paragraphs (d) (1) and (2) of this section.

(e) Upon receipt of a communication knowingly made or caused to be made in violation of paragraph (c) of this section, the Board may, to the extent consistent with the interests of justice and the policy of the underlying statutes, require the party to show cause why his or her interest in the proceeding should not be dismissed, denied, disregarded, or otherwise adversely affected on account of such violation.

(f) The Board may, to the extent consistent with the interests of justice and the policy of the underlying statutes administered by the Board, consider a violation of this section sufficient grounds for a decision adverse to a party who has knowingly committed such violation or knowingly caused such violation to occur.

(Authority: Sec. 4, Government in the Sunshine Act, Pub. L. 94–409, amending 5 U.S.C. 556 (d) and 5 U.S.C. 557; Independent Safety Board Act of 1974, Pub. L. 93–633, 88 Stat. 2166 (49 U.S.C. 1901 *et seq.*))

[42 FR 21614, Apr. 28, 1977]

PART 826—RULES IMPLEMENTING THE EQUAL ACCESS TO JUSTICE ACT OF 1980

Subpart A—General Provisions

Sec.
826.1 Purpose of these rules.
826.2 When the Act applies.
826.3 Proceedings covered.
826.4 Eligibility of applicants.
826.5 Standards for awards.
826.6 Allowable fees and expenses.
826.7 Rulemaking on maximum rates for attorney fees.
826.8 Awards against the Federal Aviation Administration.

Subpart B—Information Required From Applicants

826.21 Contents of application.

826.22 Net worth exhibit.
826.23 Documentation of fees and expenses.
826.24 When an application may be filed.

Subpart C—Procedures for Considering Applications

826.31 Filing and service of documents and general procedures.
826.32 Answer to application.
826.33 Reply.
826.34 Comments by other parties.
826.35 Settlement.
826.36 Further proceedings.
826.37 Decision.
826.38 Board review.
826.39 Judicial review.
826.40 Payment of award.

AUTHORITY: Section 203(a)(1) Pub. L. 99–80, 99 Stat. 186 (5 U.S.C. 504).

SOURCE: 46 FR 48209, Oct. 1, 1981, unless otherwise noted.

Subpart A—General Provisions

§ 826.1 Purpose of these rules.

The Equal Access to Justice Act, 5 U.S.C. 504 (the Act), provides for the award of attorney fees and other expenses to eligible individuals and entities who are parties to certain administrative proceedings (adversary adjudications) before the National Transportation Safety Board (Board). An eligible party may receive an award when it prevails over the Federal Aviation Administration (FAA), unless the Government agency's position in the proceeding was substantially justified or special circumstances make an award unjust. The rules in this part describe the parties eligible for awards and the proceedings that are covered. They also explain how to apply for awards, and the procedures and standards that this Board will use to make them. As used hereinafter, the term ''agency'' applies to the FAA.

§ 826.2 When the Act applies.

The Act applies to any adversary adjudication identified in § 826.3 as covered under the Act.

[59 FR 30531, June 14, 1994]

§ 826.3 Proceedings covered.

(a) The Act applies to certain adversary adjudications conducted by the Board. These are adjudications under 5 U.S.C. 554 in which the position of the FAA is presented by an attorney or other representative who enters an appearance and participates in the proceedings. Proceedings to grant or renew certificates or documents, hereafter referred to as ''licenses,'' are excluded, but proceedings to modify, suspend, or revoke licenses or to impose a civil penalty on a flight engineer, mechanic, pilot, or repairman (or person acting in that capacity) are covered if they are otherwise ''adversary adjudications.'' For the Board, the type of proceeding covered includes (but may not be limited to) aviation enforcement cases appealed to the Board under sections 501, 609, 611 and 901 of the Federal Aviation Act (49 U.S.C. 44101 *et seq.*, 44720–44711, 44715, 46301).

(b) The Board may also designate a proceeding not listed in paragraph (a) as an adversary adjudication for purposes of the Act by so stating in an order initiating the proceeding or designating the matter for hearing. The Board's failure to designate a proceeding as an adversary adjudication shall not preclude the filing of an application by a party who believes the proceeding is covered by the Act; whether the procedure is covered will then be an issue for resolution in proceedings on the application.

(c) If a proceeding includes both matters covered by the Act and matters specifically excluded from coverage, any award made will include only fees and expenses related to covered issues.

[46 FR 48209, Oct. 1, 1981, as amended at 59 FR 59054, Nov. 15, 1994]

§ 826.4 Eligibility of applicants.

(a) To be eligible for an award of attorney fees and other expenses under the Act, the applicant must be a party to the adversary adjudication for which it seeks an award. The term ''party'' is defined in 5 U.S.C. 551(3). The applicant must show that it meets all conditions of eligibility set out in this subpart and in subpart B.

(b) The types of eligible applicants are as follows:

(1) An individual with a net worth of not more than $2 million;

(2) The sole owner of an unincorporated business who has a net worth of not more than $7 million, including

both personal and business interests, and not more than 500 employees;

(3) A charitable or other tax-exempt organization described in section 501(c)(3) of the Internal Revenue Code (26 U.S.C. 501(c)(3)) with not more than 500 employees;

(4) A cooperative association as defined in section 15(a) of the Agricultural Marketing Act (12 U.S.C. 1141j(a)) with not more than 500 employees; and

(5) Any other partnership, corporation, association, or public or private organization with a net worth of not more than $7 million and not more than 500 employees.

(c) For the purpose of eligibility, the net worth and number of employees of an applicant shall be determined as of the date the proceeding was initiated.

(d) An applicant who owns an unincorporated business will be considered an ''individual'' rather than a ''sole owner of an unincorporated business'' if the issues on which the applicant prevails are related primarily to personal interests rather than to business interests.

(e) The employees of an applicant include all persons who regularly perform services for remuneration for the applicant, under the applicant's direction and control. Part-time employees shall be included on a proportional basis.

(f) The net worth and number of employees of the applicant and all of its affiliates shall be aggregated to determine eligibility. Any individual, corporation, or other entity that directly or indirectly controls or owns a majority of the voting shares or other interest of the applicant, or any corporation or other entity of which the applicant directly or indirectly owns or controls a majority of the voting shares or other interest, will be considered an affiliate for purposes of this part, unless the administrative law judge determines that such treatment would be unjust and contrary to the purposes of the Act in light of the actual relationship between the affiliated entities. In addition, the administrative law judge may determine that financial relationships of the applicant other than those described in this paragraph constitute special circumstances that would make an award unjust.

(g) An applicant that participates in a proceeding primarily on behalf of one or more other persons or entities that would be ineligible is not itself eligible for an award.

[46 FR 48209, Oct. 1, 1981, as amended at 54 FR 10332, Mar. 13, 1989]

§ 826.5 Standards for awards.

(a) A prevailing applicant may receive an award for fees and expenses incurred in connection with a proceeding, or in a significant and discrete substantive portion of the proceeding, unless the position of the agency over which the applicant has prevailed was substantially justified. The burden of proof that an award should not be made to an eligible prevailing applicant is on the agency counsel, who may avoid an award by showing that the agency's position was reasonable in law and fact.

(b) An award will be reduced or denied if the applicant has unduly or unreasonably protracted the proceeding or if special circumstances make the award sought unjust.

§ 826.6 Allowable fees and expenses.

(a) Awards will be based on rates customarily charged by persons engaged in the business of acting as attorneys, agents, and expert witnesses, even if the services were made available without charge or at a reduced rate to the applicant.

(b)(1) No award for the fee of an attorney or agent under these rules may exceed $75 indexed as follows:

$$\frac{X}{\$75/\text{hr}} = \frac{\text{CPI_New}}{\text{CPI_1981}}$$

The CPI to be used is the annual average CPI, All Urban Consumers, U.S. City Average, All Items, except where a local, All Item index is available. Where a local index is available, but results in a manifest inequity vis-a-vis the U.S. City Average, the U.S. City Average may be used. The numerator of that equation is the yearly average for the year(s) the services were provided, with each year calculated separately. If an annual average CPI for a particular year is not yet available, the prior year's annual average CPI shall be used. This formula increases the $75

statutory cap by indexing it to reflect cost of living increases, as authorized in 5 U.S.C. 504(b)(1)(A)(ii). Application of these increased rate caps requires affirmative findings under § 821.6(c) of this chapter. For ease of application, available U.S. City figures are reproduced as follows:

1981	90.9
1982	96.5
1983	99.6
1984	103.9
1985	107.6
1986	109.6
1987	113.6
1988	118.3
1989	124.0
1990	130.7
1991	136.2
1992	140.3
1993	144.5

(2) No award to compensate an expert witness may exceed the highest rate at which the agency pays expert witnesses. However, an award may also include the reasonable expenses of the attorney, agent, or witness as a separate item, if the attorney, agent, or witness ordinarily charges clients separately for such expenses.

(c) In determining the reasonableness of the fee sought for an attorney, agent, or expert witness, the administrative law judge shall consider the following:

(1) If the attorney, agent, or witness is in private practice, his or her customary fee for similar services, or if an employee of the applicant, the fully allocated cost of the services;

(2) The prevailing rate for similar services in the community in which the attorney, agent, or witness ordinarily performs services;

(3) The time actually spent in the representation of the applicant;

(4) The time reasonably spent in light of the difficulty or complexity of the issues in the proceeding; and

(5) Such other factors as may bear on the value of the services provided.

(d) The reasonable cost of any study, analysis, engineering report, test, project, or similar matter prepared on behalf of a party may be awarded, to the extent that the charge for the service does not exceed the prevailing rate for similar services, and the study or other matter was necessary for preparation of the applicant's case.

[46 FR 48209, Oct. 1, 1981, as amended at 58 FR 21544, Apr. 22, 1993; 59 FR 30531, June 14, 1994]

§ 826.7 Rulemaking on maximum rates for attorney fees.

(a) In addition to increases based on cost of living (*see* § 826.6), attorney fees in some or all of the proceedings covered by this part may also be increased beyond the statutory cap of $75 if warranted by special factors (such as limited availability of attorneys qualified to handle certain types of proceedings). The Board will conduct any rulemaking proceedings for this purpose under the informal rulemaking procedures of the Administrative Procedure Act.

(b) Any person may file with the Board a petition for rulemaking to increase the maximum rate for attorney fees by demonstrating that a special factor(s) justifies a higher fee. The petition shall identify the rate the petitioner believes the Board should establish and the proceeding(s) or types of proceedings in which the rate should be used. It should also explain fully the reasons why the higher rate is warranted. The Board will respond to the petition within 60 days after it is filed, by initiating a rulemaking proceeding, denying the petition, or taking other appropriate action.

[58 FR 21545, Apr. 22, 1993]

§ 826.8 Awards against the Federal Aviation Administration.

When an applicant is entitled to an award because it prevails over an agency of the United States that participates in a proceeding before the Board and takes a position that is not substantially justified, the award shall be made against that agency.

Subpart B—Information Required From Applicants

§ 826.21 Contents of application.

(a) An application for an award of fees and expenses under the Act shall identify the applicant and the proceeding for which an award is sought. The application shall show that the applicant has prevailed and identify the

position of the agency in the proceeding that the applicant alleges was not substantially justified. Unless the applicant is an individual, the application shall also state the number of employees of the applicant and describe briefly the type and purpose of its organization or business.

(b) The application shall also include a statement that the applicant's net worth does not exceed $2 million (if an individual) or $7 million (for all other applicants, including their affiliates). However, an applicant may omit this statement if:

(1) It attaches a copy of a ruling by the Internal Revenue Service that it qualifies as an organization described in section 501(c)(3) of the Internal Revenue Code (26 U.S.C. 501(c)(3)), or in the case of a tax-exempt organization not required to obtain a ruling from the Internal Revenue Service on its exempt status, a statement that describes the basis for the applicant's belief that it qualifies under such section; or

(2) It states that it is a cooperative association as defined in section 15(a) of the Agricultural Marketing Act (12 U.S.C. 1141j(a)).

(c) The application shall state the amount of fees and expenses for which an award is sought.

(d) The application may also include any other matters that the applicant wishes this agency to consider in determining whether and in what amount an award should be made.

(e) The application shall be signed by the applicant or an authorized officer or attorney for the applicant. It shall also contain or be accompanied by a written verification under oath or under penalty of perjury that the information provided in the application is true and correct.

[46 FR 48209, Oct. 1, 1981, as amended at 59 FR 30532, June 14, 1994]

§ 826.22 Net worth exhibit.

(a) Each applicant except a qualified tax-exempt organization or cooperative association must provide with its application a detailed exhibit showing the net worth of the applicant and any affiliates (as defined in § 826.4(f) of this part) when the proceeding was initiated. The exhibit may be in any form convenient to the applicant that provides full disclosure of the applicant's and its affiliates' assets and liabilities and is sufficient to determine whether the applicant qualifies under the standards in this part. The administrative law judge may require an applicant to file additional information to determine the eligibility for an award.

(b) Ordinarily, the net worth exhibit will be included in the public record of the proceeding. However, an applicant that objects to public disclosure of information in any portion of the exhibit and believes there are legal grounds for withholding it from disclosure may submit that portion of the exhibit directly to the administrative law judge in a sealed envelope labeled ''Confidential Financial Information,'' accompanied by a motion to withhold the information from public disclosure. The motion shall describe the information sought to be withheld and explain, in detail, why it falls within one or more of the specific exemptions from mandatory disclosure under the Freedom of Information Act, 5 U.S.C. 552(b)(1) through (9), why public disclosure of the information would adversely affect the applicant, and why disclosure is not required in the public interest. The material in question shall be served on counsel representing the agency against which the applicant seeks an award, but need not be served on any other party to the proceeding. If the administrative law judge finds that the information should not be withheld from disclosure, it shall be placed in the public record of the proceeding. Otherwise, any request to inspect or copy the exhibit shall be disposed of in accordance with the Board's established procedures under the Freedom of Information Act as inplemented by Part 801 of the Board's rules.

§ 826.23 Documentation of fees and expenses.

The application shall be accompanied by full documentation of the fees and expenses, including the cost of any study, analysis, engineering report, test, project or similar matter, for which an award is sought. A separate itemized statement shall be submitted for each professional firm or individual whose services are covered by the application, showing the hours spend in

connection with the proceeding by each individual, a description of the specific services performed, the rate at which each fee has been computed, any expenses for which reimbursement is sought, the total amount claimed, and the total amount paid or payable by the applicant or by any other person or entity for the services provided. The administrative law judge may require the applicant to provide vouchers, receipts, or other substantiation for any expenses claimed.

§ 826.24 When an application may be filed.

(a) An application may be filed whenever the applicant has prevailed in the proceeding, but in no case no later than the 30 days after the Board's final disposition of the proceeding. This 30-day deadline is statutory and the Board has no authority to extend it.

(b) If review or reconsideration is sought or taken of a decision to which an applicant believes it has prevailed, proceedings for the award of fees shall be stayed pending final disposition of the underlying controversy.

(c) For purposes of this rule, final disposition means the later of (1) the date on which an unappealed initial decision by an administrative law judge becomes administratively final; (2) issuance of an order disposing of any petitions for reconsideration of the Board's final order in the proceeding; (3) if no petition for reconsideration is filed, the last date on which such a petition could have been filed; or (4) issuance of a final order or any other final resolution of a proceeding, such as a settlement or voluntary dismissal, which is not subject to a petition for reconsideration.

[46 FR 48209, Oct. 1, 1981, as amended at 59 FR 30532, June 14, 1994]

Subpart C—Procedures for Considering Applications

§ 826.31 Filing and service of documents and general procedures.

The rules contained in 49 CFR part 821 apply to proceedings under the Act, unless they are superseded by or are inconsistent with a provision of this part.

[59 FR 30532, June 14, 1994]

§ 826.32 Answer to application.

(a) Within 30 days after service of an application, counsel representing the agency against which an award is sought may file an answer to the application. Unless agency counsel requests an extension of time for filing or files a statement of intent to negotiate under paragraph (b) of this section, failure to file an answer within the 30-day period may be treated as a consent to the award requested.

(b) If agency counsel and the applicant believe that the issues in the fee application can be settled, they may jointly file a statement of their intent to negotiate a settlement. The filing of this statement shall extend the time for filing an answer for an additional 30 days, and further extensions may be granted by the administrative law judge upon request by agency counsel and the applicant.

(c) The answer shall explain in detail any objections to the award requested and identify the facts relied on in support of agency counsel's position. If the answer is based on any alleged facts not already in the record of the proceeding, agency counsel shall include with the answer either supporting affidavits or a request for further proceedings under § 826.36.

§ 826.33 Reply.

Within 15 days after service of an answer, the applicant may file a reply. If the reply is based on any alleged facts not already in the record of the proceeding, the applicant shall include with the reply either supporting affidavits or a request for further proceedings under § 826.36.

§ 826.34 Comments by other parties.

Any party to a proceeding other than the applicant and agency counsel may file comments on an application within 30 days after it is served or on an answer within 15 days after it is served. A commenting party may not participate further in proceedings on the application unless the administrative law

judge determines that the public interest requires such participation in order to permit full exploration of matters raised in the comments.

§ 826.35 Settlement.

The applicant and agency counsel may agree on a proposed settlement of the award before final action on the application, either in connection with a settlement of the underlying proceeding, or after the underlying proceeding has been concluded. If a prevailing party and agency counsel agree on a proposed settlement of an award before an application has been filed, the application shall be filed with the proposed settlement.

§ 826.36 Further proceedings.

(a) Ordinarily the determination of an award will be made on the basis of the written record; however, on request of either the applicant or agency counsel, or on his or her own initiative, the administrative law judge assigned to the matter may order further proceedings, such as an informal conference, oral argument, additional written submissions, or an evidentiary hearing. Such further proceedings shall be held only when necessary for full and fair resolution of the issues arising from the application and shall be conducted as promptly as possible.

(b) A request that the administrative law judge order further proceedings under this section shall specifically identify the information sought or the disputed issues and shall explain why the additional proceedings are necessary to resolve the issues.

§ 826.37 Decision.

The administrative law judge shall issue an initial decision on the application within 60 days after completion of proceedings on the application. The decision shall include written findings and conclusions on the applicant's eligibility and status as a prevailing party and an explanation of the reasons for any difference between the amount requested and the amount awarded. The decision shall also include, if at issue, findings on whether the agency's position was substantially justified, whether the applicant unduly protracted the proceedings, or whether special circumstances make an award unjust.

§ 826.38 Board review.

Either the applicant or agency counsel may seek review of the initial decision on the fee application, or the Board may decide to review the decision on its own initiative, in accordance with subpart H of part 821 for FAA safety enforcement matters appealed under section 609 of the Federal Aviation Act. If neither the applicant nor agency counsel seeks review and the Board does not take review on its own initiative, the initial decision on the application shall become a final decision of the Board 30 days after it is issued. Whether to review a decision is a matter within the discretion of the Board. If review is taken, the Board will issue a final decision on the application or remand the application to the administrative law judge who issued the initial fee award determination for further proceedings.

§ 826.39 Judicial review.

Judicial review of final Board decisions on awards may be sought as provided in 5 U.S.C. 504(c)(2).

§ 826.40 Payment of award.

An applicant seeking payment of an award shall submit to the disbursing official of the FAA a copy of the Board's final decision granting the award, accompanied by a statement that the applicant will not seek review of the decision in the United States courts. Applications for award grants in cases involving the FAA shall be sent to: The Office of Accounting and Audit, AAA–1, Federal Aviation Administration, 800 Independence Avenue, SW., Washington, DC 20591. The agency will pay the amount awarded to the applicant within 60 days, unless judicial review of the award or of the underlying decision of the adversary adjudication has been sought by the applicant or any other party to the proceeding.

PART 830—NOTIFICATION AND REPORTING OF AIRCRAFT ACCIDENTS OR INCIDENTS AND OVERDUE AIRCRAFT, AND PRESERVATION OF AIRCRAFT WRECKAGE, MAIL, CARGO, AND RECORDS

Subpart A—General

Sec.
830.1 Applicability.
830.2 Definitions.

Subpart B—Initial Notification of Aircraft Accidents, Incidents, and Overdue Aircraft

830.5 Immediate notification.
830.6 Information to be given in notification.

Subpart C—Preservation of Aircraft Wreckage, Mail, Cargo, and Records

830.10 Preservation of aircraft wreckage, mail, cargo, and records.

Subpart D—Reporting of Aircraft Accidents, Incidents, and Overdue Aircraft

830.15 Reports and statements to be filed.

AUTHORITY: Federal Aviation Act of 1958, as amended (49 U.S.C. 40101 *et seq.*), and the Independent Safety Board Act of 1974, as amended (49 U.S.C. 1101 *et seq.*).

SOURCE: 53 FR 36982, Sept. 23, 1988, unless otherwise noted.

Subpart A—General

§ 830.1 Applicability.

This part contains rules pertaining to:

(a) Initial notification and later reporting of aircraft incidents and accidents and certain other occurrences in the operation of aircraft, wherever they occur, when they involve civil aircraft of the United States; when they involve certain public aircraft, as specified in this part, wherever they occur; and when they involve foreign civil aircraft where the events occur in the United States, its territories, or its possessions.

(b) Preservation of aircraft wreckage, mail, cargo, and records involving all civil and certain public aircraft accidents, as specified in this part, in the United States and its territories or possessions.

[60 FR 40112, Aug. 7, 1995]

§ 830.2 Definitions.

As used in this part the following words or phrases are defined as follows:

Aircraft accident means an occurrence associated with the operation of an aircraft which takes place between the time any person boards the aircraft with the intention of flight and all such persons have disembarked, and in which any person suffers death or serious injury, or in which the aircraft receives substantial damage.

Civil aircraft means any aircraft other than a public aircraft.

Fatal injury means any injury which results in death within 30 days of the accident.

Incident means an occurrence other than an accident, associated with the operation of an aircraft, which affects or could affect the safety of operations.

Operator means any person who causes or authorizes the operation of an aircraft, such as the owner, lessee, or bailee of an aircraft.

Public aircraft means an aircraft used only for the United States Government, or an aircraft owned and operated (except for commercial purposes) or exclusively leased for at least 90 continuous days by a government other than the United States Government, including a State, the District of Columbia, a territory or possession of the United States, or a political subdivision of that government. ''Public aircraft'' does not include a government-owned aircraft transporting property for commercial purposes and does not include a government-owned aircraft transporting passengers other than: transporting (for other than commercial purposes) crewmembers or other persons aboard the aircraft whose presence is required to perform, or is associated with the performance of, a governmental function such as firefighting, search and rescue, law enforcement, aeronautical research, or biological or geological resource management; or transporting (for other than commercial purposes) persons aboard the aircraft if the aircraft is operated by the Armed Forces or an intelligence agency of the United States.

Notwithstanding any limitation relating to use of the aircraft for commercial purposes, an aircraft shall be considered to be a public aircraft without regard to whether it is operated by a unit of government on behalf of another unit of government pursuant to a cost reimbursement agreement, if the unit of government on whose behalf the operation is conducted certifies to the Administrator of the Federal Aviation Administration that the operation was necessary to respond to a significant and imminent threat to life or property (including natural resources) and that no service by a private operator was reasonably available to meet the threat.

Serious injury means any injury which: (1) Requires hospitalization for more than 48 hours, commencing within 7 days from the date of the injury was received; (2) results in a fracture of any bone (except simple fractures of fingers, toes, or nose); (3) causes severe hemorrhages, nerve, muscle, or tendon damage; (4) involves any internal organ; or (5) involves second- or third-degree burns, or any burns affecting more than 5 percent of the body surface.

Substantial damage means damage or failure which adversely affects the structural strength, performance, or flight characteristics of the aircraft, and which would normally require major repair or replacement of the affected component. Engine failure or damage limited to an engine if only one engine fails or is damaged, bent fairings or cowling, dented skin, small punctured holes in the skin or fabric, ground damage to rotor or propeller blades, and damage to landing gear, wheels, tires, flaps, engine accessories, brakes, or wingtips are not considered ''substantial damage'' for the purpose of this part.

[53 FR 36982, Sept. 23, 1988, as amended at 60 FR 40112, Aug. 7, 1995]

Subpart B—Initial Notification of Aircraft Accidents, Incidents, and Overdue Aircraft

§ 830.5 Immediate notification.

The operator of any civil aircraft, or any public aircraft not operated by the Armed Forces or an intelligence agency of the United States, or any foreign aircraft shall immediately, and by the most expeditious means available, notify the nearest National Transportation Safety Board (Board) field office[1] when:

(a) An aircraft accident or any of the following listed incidents occur:

(1) Flight control system malfunction or failure;

(2) Inability of any required flight crewmember to perform normal flight duties as a result of injury or illness;

(3) Failure of structural components of a turbine engine excluding compressor and turbine blades and vanes;

(4) In-flight fire; or

(5) Aircraft collide in flight.

(6) Damage to property, other than the aircraft, estimated to exceed $25,000 for repair (including materials and labor) or fair market value in the event of total loss, whichever is less.

(7) For large multiengine aircraft (more than 12,500 pounds maximum certificated takeoff weight):

(i) In-flight failure of electrical systems which requires the sustained use of an emergency bus powered by a back-up source such as a battery, auxiliary power unit, or air-driven generator to retain flight control or essential instruments;

(ii) In-flight failure of hydraulic systems that results in sustained reliance on the sole remaining hydraulic or mechanical system for movement of flight control surfaces;

(iii) Sustained loss of the power or thrust produced by two or more engines; and

(iv) An evacuation of an aircraft in which an emergency egress system is utilized.

(b) An aircraft is overdue and is believed to have been involved in an accident.

[53 FR 36982, Sept. 23, 1988, as amended at 60 FR 40113, Aug. 7, 1995]

[1] The Board field offices are listed under U.S. Government in the telephone directories of the following cities: Anchorage, AK, Atlanta, GA, West Chicago, IL, Denver, CO, Arlington, TX, Gardena (Los Angeles), CA, Miami, FL, Parsippany, NJ (metropolitan New York, NY), Seattle, WA, and Washington, DC.

§ 830.6 Information to be given in notification.

The notification required in § 830.5 shall contain the following information, if available:

(a) Type, nationality, and registration marks of the aircraft;

(b) Name of owner, and operator of the aircraft;

(c) Name of the pilot-in-command;

(d) Date and time of the accident;

(e) Last point of departure and point of intended landing of the aircraft;

(f) Position of the aircraft with reference to some easily defined geographical point;

(g) Number of persons aboard, number killed, and number seriously injured;

(h) Nature of the accident, the weather and the extent of damage to the aircraft, so far as is known; and

(i) A description of any explosives, radioactive materials, or other dangerous articles carried.

Subpart C—Preservation of Aircraft Wreckage, Mail, Cargo, and Records

§ 830.10 Preservation of aircraft wreckage, mail, cargo, and records.

(a) The operator of an aircraft involved in an accident or incident for which notification must be given is responsible for preserving to the extent possible any aircraft wreckage, cargo, and mail aboard the aircraft, and all records, including all recording mediums of flight, maintenance, and voice recorders, pertaining to the operation and maintenance of the aircraft and to the airmen until the Board takes custody thereof or a release is granted pursuant to § 831.12(b) of this chapter.

(b) Prior to the time the Board or its authorized representative takes custody of aircraft wreckage, mail, or cargo, such wreckage, mail, or cargo may not be disturbed or moved except to the extent necessary:

(1) To remove persons injured or trapped;

(2) To protect the wreckage from further damage; or

(3) To protect the public from injury.

(c) Where it is necessary to move aircraft wreckage, mail or cargo, sketches, descriptive notes, and photographs shall be made, if possible, of the original positions and condition of the wreckage and any significant impact marks.

(d) The operator of an aircraft involved in an accident or incident shall retain all records, reports, internal documents, and memoranda dealing with the accident or incident, until authorized by the Board to the contrary.

Subpart D—Reporting of Aircraft Accidents, Incidents, and Overdue Aircraft

§ 830.15 Reports and statements to be filed.

(a) *Reports.* The operator of a civil, public (as specified in § 830.5), or foreign aircraft shall file a report on Board Form 6120.½ (OMB No. 3147–0001)[2] within 10 days after an accident, or after 7 days if an overdue aircraft is still missing. A report on an incident for which immediate notification is required by § 830.5(a) shall be filed only as requested by an authorized representative of the Board.

(b) *Crewmember statement.* Each crewmember, if physically able at the time the report is submitted, shall attach a statement setting forth the facts, conditions, and circumstances relating to the accident or incident as they appear to him. If the crewmember is incapacitated, he shall submit the statement as soon as he is physically able.

(c) *Where to file the reports.* The operator of an aircraft shall file any report with the field office of the Board nearest the accident or incident.

[53 FR 36982, Sept. 23, 1988, as amended at 60 FR 40113, Aug. 7, 1995]

PART 831—ACCIDENT/INCIDENT INVESTIGATION PROCEDURES

Sec.
831.1 Applicability of part.
831.2 Responsibility of Board.
831.3 Authority of Directors.
831.4 Nature of investigation.
831.5 Priority of Board investigations.

[2] Forms are available from the Board field offices (see footnote 1), from Board headquarters in Washington, DC, and from the Federal Aviation Administration Flight Standards District Offices.

831.6 Request to withhold information.
831.7 Right to representation.
831.8 Investigator-in-charge.
831.9 Authority of Board representatives.
831.10 Autopsies.
831.11 Parties to the investigation.
831.12 Access to and release of wreckage, records, mail, and cargo.
831.13 Flow and dissemination of accident or incident information.
831.14 Proposed findings.

AUTHORITY: Independent Safety Board Act of 1974, as amended (49 U.S.C. 1101 *et seq.*); Federal Aviation Act of 1958, as amended (49 U.S.C. 40101 *et seq.*).

SOURCE: 53 FR 15847, May 4, 1988, unless otherwise noted.

§ 831.1 Applicability of part.

Unless otherwise specifically ordered by the National Transportation Safety Board (Board), the provisions of this part shall govern all accident or incident investigations, conducted under the authority of title VII of the Federal Aviation Act of 1958, as amended, and the Independent Safety Board Act of 1974. Rules applicable to accident hearings and reports are set forth in part 845.

§ 831.2 Responsibility of Board.

(a) *Aviation*. (1) The Board is responsible for the organization, conduct, and control of all accident and incident investigations (see § 830.2 of this chapter) within the Untied States, its territories and possessions, where the accident or incident involves any civil aircraft or certain public aircraft (as specified in § 830.5 of this chapter), including an investigation involving civil or public aircraft (as specified in § 830.5) on the one hand, and an Armed Forces or intelligence agency aircraft on the other hand. It is also responsible for investigating accidents/incidents that occur outside the United States, and which involve civil aircraft and/or certain public aircraft, when the accident/incident is not in the territory of another country (*i.e.*, in international waters).

(2) Certain aviation investigations may be conducted by the Federal Aviation Administration (FAA), pursuant to a ''Request to the Secretary of the Department of Transportation to Investigate Certain Aircraft Accidents,'' effective February 10, 1977 (the text of the request is contained in the appendix to part 800 of this chapter), but the Board determines the probable cause of such accidents or incidents.[1] Under no circumstances are aviation investigations where the portion of the investigation is so delegated to the FAA by the Board considered to be joint investigations in the sense of sharing responsibility. These investigations remain NTSB investigations.

(3) The Board is the agency charged with fulfilling the obligations of the United States under Annex 13 to the Chicago Convention on International Civil Aviation (Eighth Edition, July 1994), and does so consistent with State Department requirements and in coordination with that department. Annex 13 contains specific requirements for the notification, investigation, and reporting of certain incidents and accidents involving international civil aviation. In the case of an accident or incident in a foreign state involving civil aircraft of U.S. registry or manufacture, where the foreign state is a signatory to Annex 13 to the Chicago Convention of the International Civil Aviation Organization, the state of occurrence is responsible for the investigation. If the accident or incident occurs in a foreign state not bound by the provisions of Annex 13 to the Chicago Convention, or if the accident or incident involves a public aircraft (Annex 13 applies only to civil aircraft), the conduct of the investigation shall be in consonance with any agreement entered into between the United States and the foreign state.

(b) *Surface*. The Board is responsible for the investigation of: railroad accidents in which there is a fatality, substantial property damage, or which involve a passenger train (see part 840 of this chapter); major marine casualties and marine accidents involving a public and non-public vessel or involving Coast Guard functions (see part 850 of

[1] The authority of a representative of the FAA during such investigations is the same as that of a Board investigator under this part.

this chapter[2]); highway accidents, including railroad grade-crossing accidents, the investigation of which is selected in cooperation with the States; and pipeline accidents in which there is a fatality, significant injury to the environment, or substantial property damage.

(c) *Other accidents/incidents.* The Board is also responsible for the investigation of an accident/incident that occurs in connection with the transportation of people or property which, in the judgment of the Board, is catastrophic, involves problems of a recurring character, or would otherwise carry out the policy of the Independent Safety Board Act of 1974. This authority includes, but is not limited to, marine and boating accidents and incidents not covered by part 850 of this chapter, and accidents/incidents selected by the Board involving transportation and/or release of hazardous materials.

[62 FR 3806, Jan. 27, 1997]

§ 831.3 Authority of Directors.

The Directors, Office of Aviation Safety, Office of Railroad Safety, Office of Highway Safety, Office of Marine Safety, and Office of Pipeline and Hazardous Materials Safety, subject to the provisions of § 831.2 and part 800 of this chapter, may order an investigation into any accident or incident.

[63 FR 71606, Dec. 29, 1998]

§ 831.4 Nature of investigation.

Accident and incident investigations are conducted by the Board to determine the facts, conditions, and circumstances relating to an accident or incident and the probable cause(s) thereof. These results are then used to ascertain measures that would best tend to prevent similar accidents or incidents in the future. The investigation includes the field investigation (on-scene at the accident, testing, teardown, etc.), report preparation, and, where ordered, a public hearing. The investigation results in Board conclusions issued in the form of a report or ''brief'' of the incident or accident. Accident/incident investigations are fact-finding proceedings with no formal issues and no adverse parties. They are not subject to the provisions of the Administrative Procedure Act (5 U.S.C. 504 *et seq.*), and are not conducted for the purpose of determining the rights or liabilities of any person.

[62 FR 3806, Jan. 27, 1997]

§ 831.5 Priority of Board investigations.

Any investigation of an accident or incident conducted by the Safety Board directly or pursuant to the appendix to part 800 of this chapter (except major marine investigations conducted under 49 U.S.C. 1131(a)(1)(E)) has priority over all other investigations of such accident or incident conducted by other Federal agencies. The Safety Board shall provide for the appropriate participation by other Federal agencies in any such investigation, except that such agencies may not participate in the Safety Board's determination of the probable cause of the accident or incident. Nothing in this section impairs the authority of other Federal agencies to conduct investigations of an accident or incident under applicable provisions of law or to obtain information directly from parties involved in, and witnesses to, the transportation accident or incident, provided they do so without interfering with the Safety Board's investigation. The Safety Board and other Federal agencies shall assure that appropriate information obtained or developed in the course of their investigations is exchanged in a timely manner.

[62 FR 3807, Jan. 27, 1997]

§ 831.6 Request to withhold information.

(a) *Trade Secrets Act (18 U.S.C. 1905), Exemption 4 of the Freedom of Information Act (5 U.S.C. 552) (FOIA), and The Independent Safety Board Act of 1974, as amended.*

(1) *General.* The Trade Secrets Act provides criminal penalties for unauthorized government disclosure of trade secrets and other specified confidential commercial information. The Freedom of Information Act authorizes

[2] Part 850 also governs the conduct of certain investigations in which the Board and the Coast Guard participate jointly.

withholding of such information; however, the Independent Safety Board Act, at 49 U.S.C. 1114(b), provides that the Board may, under certain circumstances, disclose information related to trade secrets.

(2) *Procedures*. Information submitted to the Board that the submitter believes qualifies as a trade secret or confidential commercial information subject either to the Trade Secrets Act or FOIA Exemption 4 shall be so identified by the submitter on each and every page of such document. The Board shall give the submitter of any information so identified, or information the Board has substantial reason to believe qualifies as a trade secret or confidential commercial information subject either to the Trade Secrets Act or FOIA Exemption 4, the opportunity to comment on any contemplated disclosure, pursuant to 49 U.S.C. 1114(b). In all instances where the Board determines to disclose pursuant to 49 U.S.C. 1114(b) and/or 5 U.S.C. 552, at least 10 days' notice will be provided the submitter. Notice may not be provided the submitter when disclosure is required by a law other than FOIA if the information is not identified by the submitter as qualifying for withholding, as is required by this paragraph, unless the Board has substantial reason to believe that disclosure would result in competitive harm.

(3) *Voluntarily-provided safety information*. It is the policy of the Safety Board that commercial, safety-related information provided to it voluntarily and not in the context of particular accident/incident investigations will not be disclosed. Reference to such information for the purposes of safety recommendations will be undertaken with consideration for the confidential nature of the underlying database(s).

(b) *Other*. Any person may make written objection to the public disclosure of any other information contained in any report or document filed, or otherwise obtained by the Board, stating the grounds for such objection. The Board, on its own initiative or if such objection is made, may order such information withheld from public disclosure when, in its judgment, the information may be withheld under the provisions of an exemption to the Freedom of Information Act (5 U.S.C. 552, see part 801 of this chapter), and its release is found not to be in the public interest.

[62 FR 3807, Jan. 27, 1997]

§ 831.7 Right to representation.

Any person interviewed by an authorized representative of the Board during the investigation, regardless of the form of the interview (sworn, unsworn, transcribed, not transcribed, etc.), has the right to be accompanied, represented, or advised by an attorney or non-attorney representative.

[62 FR 3807, Jan. 27, 1997]

§ 831.8 Investigator-in-charge.

The designated investigator-in-charge (IIC) organizes, conducts, controls, and manages the field phase of the investigation, regardless of whether a Board Member is also on-scene at the accident or incident site. (The role of the Board member at the scene of an accident investigation is as the official spokesperson for the Safety Board.) The IIC has the responsibility and authority to supervise and coordinate all resources and activities of all personnel, both Board and non-Board, involved in the on-site investigation. The IIC continues to have considerable organizational and management responsibilities throughout later phases of the investigation, up to and including Board consideration and adoption of a report or brief of probable cause(s).

[62 FR 3807, Jan. 27, 1997]

§ 831.9 Authority of Board representatives.

(a) *General*. Any employee of the Board, upon presenting appropriate credentials, is authorized to enter any property where an accident/incident subject to the Board's jurisdiction has occurred, or wreckage from any such accident/incident is located, and do all things considered necessary for proper investigation. Further, upon demand of an authorized representative of the Board and presentation of credentials, any Government agency, or person having possession or control of any transportation vehicle or component

thereof, any facility, equipment, process or controls relevant to the investigation, or any pertinent records or memoranda, including all files, hospital records, and correspondence then or thereafter existing, and kept or required to be kept, shall forthwith permit inspection, photographing, or copying thereof by such authorized representative for the purpose of investigating an accident or incident, or preparing a study, or related to any special investigation pertaining to safety or the prevention of accidents. The Safety Board may issue a subpoena, enforceable in Federal district court, to obtain testimony or other evidence. Authorized representatives of the Board may question any person having knowledge relevant to an accident/incident, study, or special investigation. Authorized representatives of the Board also have exclusive authority, on behalf of the Board, to decide the way in which any testing will be conducted, including decisions on the person that will conduct the test, the type of test that will be conducted, and any individual who will witness the test.

(b) *Aviation*. Any employee of the Board, upon presenting appropriate credentials, is authorized to examine and test to the extent necessary any civil or public aircraft (as specified in § 830.5), aircraft engine, propeller, appliance, or property aboard such aircraft involved in an accident in air commerce.

(c) *Surface*. (1) Any employee of the Board, upon presenting appropriate credentials, is authorized to test or examine any vehicle, vessel, rolling stock, track, pipeline component, or any part of any such item when such examination or testing is determined to be required for purposes of such investigation.

(2) Any examination or testing shall be conducted in such a manner so as not to interfere with or obstruct unnecessarily the transportation services provided by the owner or operator of such vehicle, vessel, rolling stock, track, or pipeline component, and shall be conducted in such a manner so as to preserve, to the maximum extent feasible, any evidence relating to the transportation accident, consistent with the needs of the investigation and with the cooperation of such owner or operator.

[53 FR 15847, May 4, 1988, as amended at 60 FR 40113, Aug. 7, 1995; 62 FR 3807, Jan. 27, 1997]

§ 831.10 Autopsies.

The Board is authorized to obtain, with or without reimbursement, a copy of the report of autopsy performed by State or local officials on any person who dies as a result of having been involved in a transportation accident within the jurisdiction of the Board. The investigator-in-charge, on behalf of the Board, may order an autopsy or seek other tests of such persons as may be necessary to the investigation, provided that to the extent consistent with the needs of the accident investigation, provisions of local law protecting religious beliefs with respect to autopsies shall be observed.

§ 831.11 Parties to the investigation.

(a) *All Investigations, regardless of mode*. (1) The investigator-in-charge designates parties to participate in the investigation. Parties shall be limited to those persons, government agencies, companies, and associations whose employees, functions, activities, or products were involved in the accident or incident and who can provide suitable qualified technical personnel actively to assist in the investigation. Other than the FAA in aviation cases, no other entity is afforded the right to participate in Board investigations.

(2) Participants in the investigation (*i.e.*, party representatives, party coordinators, and/or the larger party organization) shall be responsive to the direction of Board representatives and may lose party status if they do not comply with their assigned duties and activity proscriptions or instructions, or if they conduct themselves in a manner prejudicial to the investigation.

(3) No party to the investigation shall be represented in any aspect of the NTSB investigation by any person who also represents claimants or insurers. No party representative may occupy a legal position (see § 845.13 of this chapter). Failure to comply with these

provisions may result in sanctions, including loss of status as a party.

(4) Title 49, United States Code § 1132 provides for the appropriate participation of the FAA in Board investigations, and § 1131(a)(2) provides for such participation by other departments, agencies, or instrumentalities. The FAA and those other entities that meet the requirements of paragraph (a)(1) of this section will be parties to the investigation with the same rights and privileges and subject to the same limitations as other parties, provided however that representatives of the FAA need not sign the ''Statement of Party Representatives to NTSB Investigation'' (see paragraph (b) of this section).

(b) *Aviation investigations.* In addition to compliance with the provisions of paragraph (a) of this section, and to assist in ensuring complete understanding of the requirements and limitations of party status, all party representatives in aviation investigations shall sign ''Statement of Party Representatives to NTSB Investigation'' immediately upon attaining party representative status. Failure timely to sign that statement may result in sanctions, including loss of status as a party.

[62 FR 3808, Jan. 27, 1997, as amended at 63 FR 71606, Dec. 29, 1998]

§ 831.12 Access to and release of wreckage, records, mail, and cargo.

(a) Only the Board's accident investigation personnel, and persons authorized by the investigator-in-charge to participate in any particular investigation, examination or testing shall be permitted access to wreckage, records, mail, or cargo in the Board's custody.

(b) Wreckage, records, mail, and cargo in the Board's custody shall be released by an authorized representative of the Board when it is determined that the Board has no further need of such wreckage, mail, cargo, or records. When such material is released, Form 6120.15, ''*Release of Wreckage,*'' will be completed, acknowledging receipt.

[62 FR 3808, Jan. 27, 1997]

§ 831.13 Flow and dissemination of accident or incident information.

(a) Release of information during the field investigation, particularly at the accident scene, shall be limited to factual developments, and shall be made only through the Board Member present at the accident scene, the representative of the Board's Office of Public Affairs, or the investigator-in-charge.

(b) All information concerning the accident or incident obtained by any person or organization participating in the investigation shall be passed to the IIC through appropriate channels before being provided to any individual outside the investigation. Parties to the investigation may relay to their respective organizations information necessary for purposes of prevention or remedial action. However, no information concerning the accident or incident may be released to any person not a party representative to the investigation (including non-party representative employees of the party organization) before initial release by the Safety Board without prior consultation and approval of the IIC.

[53 FR 15847, May 4, 1988, as amended at 62 FR 3808, Jan. 27, 1997]

§ 831.14 Proposed findings.

(a) *General.* Any person, government agency, company, or association whose employees, functions, activities, or products were involved in an accident or incident under investigation may submit to the Board written proposed findings to be drawn from the evidence produced during the course of the investigation, a proposed probable cause, and/or proposed safety recommendations designed to prevent future accidents.

(b) *Timing of submissions.* To be considered, these submissions must be received before the matter is calendared for consideration at a Board meeting. All written submissions are expected to have been presented to staff in advance of the formal scheduling of the meeting. This procedure ensures orderly and thorough consideration of all views.

(c) *Exception.* This limitation does not apply to safety enforcement cases handled by the Board pursuant to part

821 of this chapter. Separate *ex parte* rules, at part 821, subpart J, apply to those proceedings.

[62 FR 3808, Jan. 27, 1997]

PART 835—TESTIMONY OF BOARD EMPLOYEES

Sec.
835.1 Purpose.
835.2 Definitions.
835.3 Scope of permissible testimony.
835.4 Use of reports.
835.5 Manner in which testimony is given in civil litigation.
835.6 Request for testimony in civil litigation.
835.7 Testimony of former Board employees.
835.8 Testimony by current Board employees regarding prior activity.
835.9 Procedure in the event of a subpoena in civil litigation.
835.10 Testimony in Federal, State, or local criminal investigations and other proceedings.
835.11 Obtaining Board accident reports, factual accident reports, and supporting information.

AUTHORITY: 5 U.S.C. 301; Independent Safety Board Act of 1974, as amended (49 U.S.C. 1101 *et seq.*).

§ 835.1 Purpose.

This part prescribes policies and procedures regarding the testimony of employees of the National Transportation Safety Board (Board) in suits or actions for damages and criminal proceedings arising out of transportation accidents when such testimony is in an official capacity and arises out of or is related to accident investigation. The purpose of this part is to ensure that the time of Board employees is used only for official purposes, to avoid embroiling the Board in controversial issues that are not related to its duties, to avoid spending public funds for non-Board purposes, to preserve the impartiality of the Board, and to prohibit the discovery of opinion testimony.

[63 FR 71607, Dec. 29, 1998]

§ 835.2 Definitions.

Accident, for purposes of this part includes ''incident.''

Board accident report means the report containing the Board's determinations, including the probable cause of an accident, issued either as a narrative report or in a computer format (''briefs'' of accidents). Pursuant to section 701(e) of the Federal Aviation Act of 1958 (FA Act), and section 304(c) of the Independent Safety Board Act of 1974 (49 U.S.C. 1154(b)) (Safety Act), no part of a Board accident report may be admitted as evidence or used in any suit or action for damages growing out of any matter mentioned in such reports.

Factual accident report means the report containing the results of the investigator's investigation of the accident. The Board does not object to, and there is no statutory bar to, admission in litigation of factual accident reports. In the case of a major investigation, group chairman factual reports are factual accident reports.

[63 FR 71607, Dec. 29, 1998, as amended at 64 FR 5622, Feb. 4, 1999]

§ 835.3 Scope of permissible testimony.

(a) Section 701(e) of the FA Act and section 304(c) of the Safety Act preclude the use or admission into evidence of Board accident reports in any suit or action for damages arising from accidents. These sections reflect Congress' ''strong * * * desire to keep the Board free of the entanglement of such suits.'' Rep. No. 93–1192, 93d Cong., 2d Sess., 44 (1974), and serve to ensure that the Board does not exert an undue influence on litigation. The purposes of these sections would be defeated if expert opinion testimony of Board employees, which may be reflected in the views of the Board expressed in its reports, were admitted in evidence or used in litigation arising out of an accident. The Board relies heavily upon its investigators' opinions in its deliberations. Furthermore, the use of Board employees as experts to give opinion testimony would impose a significant administrative burden on the Board's investigative staff. Litigants must obtain their expert witnesses from other sources.

(b) For the reasons stated in paragraph (a) of this section and § 835.1, Board employees may only testify as to the factual information they obtained during the course of an investigation, including factual evaluations embodied

in their factual accident reports. However, they shall decline to testify regarding matters beyond the scope of their investigation, and they shall not give any expert or opinion testimony.

(c) Board employees may testify about the firsthand information they obtained during an investigation that is not reasonably available elsewhere, including observations recorded in their own factual accident reports. Consistent with the principles cited in § 835.1 and this section, current Board employees are not authorized to testify regarding other employee's reports, or other types of Board documents, including but not limited to safety recommendations, safety studies, safety proposals, safety accomplishments, reports labeled studies, and analysis reports, as they contain staff analysis and/or Board conclusions.

(d) Briefs of accidents may be released in conjunction with factual accident reports. Nevertheless, they are not part of those reports and are not to be admitted in evidence or used in a deposition approved under this part.

(e) Not all material in a factual accident report may be the subject of testimony. The purpose of the factual accident report, in great part, is to inform the public at large, and as a result the factual accident report may contain information and conclusions for which testimony is prohibited by this part.

(f) No employee may testify in any matter absent advance approval by the General Counsel as provided in this part.

[55 FR 41541, Oct. 12, 1990, as amended at 63 FR 71607, Dec. 29, 1998; 64 FR 5622, Feb. 4, 1999]

§ 835.4 Use of reports.

(a) As a testimonial aid and to refresh their memories, Board employees may use copies of the factual accident report they prepared, and may refer to and cite from that report during testimony.

(b) Consistent with section 701(e) of the FA Act and section 304(c) of the Safety Act, a Board employee may not use the Board's accident report for any purpose during his testimony.

[55 FR 41541, Oct. 12, 1990, as amended at 63 FR 71607, Dec. 29, 1998]

§ 835.5 Manner in which testimony is given in civil litigation.

(a) Testimony of Board employees with unique, firsthand information may be made available for use in civil actions or civil suits for damages arising out of accidents through depositions or written interrogatories. Board employees are not permitted to appear and testify in court in such actions.

(b) Normally, depositions will be taken and interrogatories answered at the Board's office to which the employee is assigned, and at a time arranged with the employee reasonably fixed to avoid substantial interference with the performance of his duties.

(c) Board employees are authorized to testify only once in connection with any investigation they have made of an accident. Consequently, when more than one civil lawsuit arises as a result of an accident, it shall be the duty of counsel seeking the employee's deposition to ascertain the identity of all parties to the multiple lawsuits and their counsel, and to advise them of the fact that a deposition has been granted, so that all interested parties may be afforded the opportunity to participate therein.

(d) Upon completion of the deposition of a Board employee, the original of the transcript will be provided the deponent for signature and correction, which the Board does not waive. A copy of the transcript of the testimony and any videotape shall be furnished, at the expense of the party requesting the deposition, to the Board's General Counsel at Washington, DC headquarters for the Board's files.

[55 FR 41541, Oct. 12, 1990, as amended at 63 FR 71607, Dec. 29, 1998]

§ 835.6 Request for testimony in civil litigation.

(a) A written request for testimony by deposition or interrogatories of a Board employee relating to an accident shall be addressed to the General Counsel, who may approve or deny the request consistent with this part. Such request shall set forth the title of the civil case, the court, the type of accident (aviation, railroad, etc.), the date and place of the accident, the reasons for desiring the testimony, and a showing that the information desired is not

reasonably available from other sources.

(b) Where testimony is sought in connection with civil litigation, the General Counsel shall not approve it until the factual accident report is issued (*i.e.*, in the public docket). In the case of major accident investigations where there are multiple factual reports issued and testimony of group chairmen is sought, the General Counsel may approve depositions regarding completed group factual reports at any time after incorporation of the report in the public docket. However, no deposition will be approved prior to the Board's public hearing, where one is scheduled or contemplated. The General Counsel may approve a deposition in the absence of a factual accident report when such a report will not be issued but all staff fact-finding is complete.

(c) The General Counsel shall attach to the approval of any deposition such reasonable conditions as may be deemed appropriate in order that the testimony will be consistent with § 835.1, will be limited to the matters delineated in § 835.3, will not interfere with the performance of the duties of the employee as set forth in § 835.5, and will otherwise conform to the policies of this part.

(d) A subpoena shall not be served upon a Board employee in connection with the taking of a deposition in civil litigation.

[63 FR 71607, Dec. 29, 1998]

§ 835.7 Testimony of former Board employees.

It is not necessary to request Board approval for testimony of a former Board employee, nor is testimony limited to depositions. However, the scope of permissible testimony continues to be constrained by all the limitations set forth in § 835.3 and § 835.4.

[63 FR 71608, Dec. 29, 1998]

§ 835.8 Testimony by current Board employees regarding prior activity.

Any testimony regarding any accident within the Board's jurisdiction, or any expert testimony arising from employment prior to Board service is prohibited absent approval by the General Counsel. Approval shall only be given if testimony will not violate § 835.1 and § 835.3, and is subject to whatever conditions the General Counsel finds necessary to promote the purposes of this part as set forth in § 835.1 and § 835.3.

[63 FR 71608, Dec. 29, 1998]

§ 835.9 Procedure in the event of a subpoena in civil litigation.

(a) If the Board employee has received a subpoena to appear and testify in connection with civil litigation, a request for his deposition shall not be approved until the subpoena has been withdrawn.

(b) Upon receipt of a subpoena, the employee shall immediately notify the General Counsel and provide all information requested by the General Counsel.

(c) The General Counsel shall determine the course of action to be taken and will so advise the employee.

[63 FR 71608, Dec. 29, 1998]

§ 835.10 Testimony in Federal, State, or local criminal investigations and other proceedings.

(a) As with civil litigation, the Board prefers that testimony be taken by deposition if court rules permit, and that testimony await the issuance of the factual accident report. The Board recognizes, however, that in the case of coroner's inquests and grand jury proceedings this may not be possible. The Board encourages those seeking testimony of Board employees to contact the General Counsel as soon as such testimony is being considered. Whenever the intent to seek such testimony is communicated to the employee, he shall immediately notify the General Counsel.

(b) In any case, Board employees are prohibited from testifying in any civil, criminal, or other matter, either in person or by deposition or interrogatories, absent advance approval of the General Counsel. The Board discourages the serving of a subpoena for testimony but, if issued, it should be served on the General Counsel, rather than the employee.

(c) If permission to testify by deposition or in person is granted, testimony shall be limited as set forth in § 835.3.

Only factual testimony is authorized; no expert or opinion testimony shall be given.

[63 FR 71608, Dec. 29, 1998]

§ 835.11 Obtaining Board accident reports, factual accident reports, and supporting information.

It is the responsibility of the individual requesting testimony to obtain desired documents. There are a number of ways to obtain Board accident reports, factual accident reports, and accompanying accident docket files. Our rules at parts 801 and 837 of this chapter explain our procedures, as will our web site, at www.ntsb.gov. Or, you may call our Public Inquiries Branch, at (800) 877–6799. Documents will not be supplied by witnesses at depositions, nor will copying services be provided by deponents.

[63 FR 71608, Dec. 29, 1998]

PART 837—PRODUCTION OF RECORDS IN LEGAL PROCEEDINGS

Sec.
837.1 Purpose and scope.
837.2 Applicability.
837.3 Published reports, material contained in the public accident investigation dockets, and accident database data.
837.4 Other material.

AUTHORITY: 49 U.S.C. 1101 *et seq.*; 40101 *et seq.*; 5 U.S.C. 301.

SOURCE: 62 FR 27703, May 21, 1997, unless otherwise noted.

§ 837.1 Purpose and scope.

(a) This part sets forth procedures to be followed when requesting material for use in legal proceedings (including administrative proceedings) in which the National Transportation Safety Board (NTSB or Board) is not a party, and procedures to be followed by the employee upon receipt of a subpoena, order, or other demand (collectively referred to here as a demand) by a court or other competent authority or by a private litigant. ''Material,'' as used in this part, means any type of physical or documentary evidence, including but not limited to paper documents, electronic media, videotapes, audiotapes, etc.

(b) The purposes of this part are to:

(1) Conserve the time of employees for conducting official business;

(2) Minimize the possibility of involving the NTSB in controversial issues not related to its mission;

(3) Maintain the impartiality of the Board among private litigants;

(4) Avoid spending the time and money of the United States for private purposes; and

(5) To protect confidential, sensitive information, and the deliberative processes of the Board.

§ 837.2 Applicability.

This part applies to requests to produce material concerning information acquired in the course of performing official duties or because of the employee's official status. Specifically, this part applies to requests for: material contained in NTSB files; and any information or material acquired by an employee of the NTSB in the performance of official duties or as a result of the employee's status. Two sets of procedures are here established, dependent on the type of material sought. Rules governing requests for employee testimony, as opposed to material production, can be found at 49 CFR part 835. Document production shall not accompany employee testimony, absent compliance with this part and General Counsel approval.

§ 837.3 Published reports, material contained in the public accident investigation dockets, and accident database data.

(a) Demands for material contained in the NTSB's official public docket files of its accident investigations, or its computerized accident database(s) shall be submitted, in writing, to the Public Inquiries Branch. Demands for specific published reports and studies should be submitted to the National Technical Information Service. The Board does not maintain stock of these items. Demands for information collected in particular accident investigations and made a part of the public docket should be submitted to the Public Inquiries Branch or, directly, to our contractor. For information regarding the types of documents routinely issued by the Board, see 49 CFR part 801.

(b) No subpoena shall be issued to obtain materials subject to this paragraph, and any subpoena issued shall be required to be withdrawn prior to release of the requested information. Payment of reproduction fees may be required in advance.

§ 837.4 Other material.

(a) *Production prohibited unless approved.* Except in the case of the material referenced in § 837.3, no employee or former employee of NTSB shall, in response to a demand of a private litigant, court, or other authority, produce any material contained in the files of the NTSB (whether or not agency records under 5 U.S.C. 552) or produce any material acquired as part of the performance of the person's official duties or because of the person's official status, without the prior written approval of the General Counsel.

(b) *Procedures to be followed for the production of material under this paragraph.*

(1) All demands for material shall be submitted to the General Counsel at NTSB headquarters, Washington, DC 20594. If an employee receives a demand, he shall forward it immediately to the General Counsel.

(2) Each demand must contain an affidavit by the party seeking the material or his attorney setting forth the material sought and its relevance to the proceeding, and containing a certification, with support, that the information is not available from other sources, including Board materials described in §§ 837.3 and part 801 of this chapter.

(3) In the absence of General Counsel approval of a demand, the employee is not authorized to comply with the demand.

(4) The General Counsel shall advise the requester of approval or denial of the demand, and may attach whatever conditions to approval considered appropriate or necessary to promote the purposes of this part. The General Counsel may also permit exceptions to any requirement in this part when necessary to prevent a miscarriage of justice, or when the exception is in the best interests of the NSTB and/or the United States.

PART 840—RULES PERTAINING TO NOTIFICATION OF RAILROAD ACCIDENTS

Sec.
840.1 Applicability.
840.2 Definitions.
840.3 Notification of railroad accidents.
840.4 Information to be given in notification.
840.5 Inspection, examination and testing of physical evidence.
840.6 Priority of Board investigations.

AUTHORITY: Sec. 304(a)(1)(c), Independent Safety Board Act of 1974, as amended (49 U.S.C. 1903).

§ 840.1 Applicability.

This part contains the Safety Board's accident notification requirements, and its authority for inspection, examination, and testing of physical evidence, and describes the exercise of the Safety Board's priority accorded to its activities when investigating railroad accidents.

[47 FR 49408, Nov. 1, 1982]

§ 840.2 Definitions.

As used in this part, the following words or phrases are defined as follows:

(a) *Railroad* means any system of surface transportation of persons or property over rails. It includes, but is not limited to, line-haul freight and passenger-carrying railroads, and rapid transit, commuter, scenic, subway, and elevated railways.

(b) *Accident* means any collision, derailment, or explosion involving railroad trains, locomotives, and cars; or any other loss-causing event involving the operation of such railroad equipment that results in a fatality to a passenger or employee, or the emergency evacuation of persons.

(c) *Joint operations* means rail operations conducted on a track used jointly or in common by two or more railroads subject to this part, or operation of a train, locomotive, or car by one railroad over the track of another railroad.

(d) *Fatality* means the death of a person either at the time an accident occurs or within 24 hours thereafter.

[41 FR 13925, Apr. 1, 1976, as amended at 47 FR 49408, Nov. 1, 1982]

§ 840.3 Notification of railroad accidents.

The operator of a railroad shall notify the Board by telephoning the National Response Center at telephone 800–424–0201 at the earliest practicable time after the occurrence of any one of the following railroad accidents:

(a) No later than 2 hours after an accident which results in:

(1) A passenger or employee fatality or serious injury to two or more crewmembers or passengers requiring admission to a hospital;

(2) The evacuation of a passenger train;

(3) Damage to a tank car or container resulting in release of hazardous materials or involving evacuation of the general public; or

(4) A fatality at a grade crossing.

(b) No later than 4 hours after an accident which does not involve any of the circumstances enumerated in paragraph (a) of this section but which results in:

(1) Damage (based on a preliminary gross estimate) of $150,000 or more for repairs, or the current replacement cost, to railroad and nonrailroad property; or

(2) Damage of $25,000 or more to a passenger train and railroad and nonrailroad property.

(c) Accidents involving joint operations must be reported by the railroad that controls the track and directs the movement of trains where the accident has occurred.

(d) Where an accident for which notification is required by paragraph (a) or (b) of this section occurs in a remote area, the time limits set forth in that paragraph shall commence from the time the first railroad employee who was not at the accident site at the time of its occurrence has received notice thereof.

[53 FR 49152, Dec. 6, 1988]

§ 840.4 Information to be given in notification.

The notice required by § 840.3 shall include the following information:

(a) Name and title of person reporting.

(b) Name of railroad.

(c) Location of accident (relate to nearest city).

(d) Time and date of accident.

(e) Description of accident.

(f) Casualties:

(1) Fatalities.

(2) Injuries.

(g) Property damage (estimate).

(h) Name and telephone number of person from whom additional information may be obtained.

[41 FR 13925, Apr. 1, 1976]

§ 840.5 Inspection, examination and testing of physical evidence.

(a) Any employee of the Safety Board, upon presenting appropriate credentials is authorized to enter any property wherein a transportation accident has occurred or wreckage from any such accident is located and do all things necessary for proper investigation, including examination or testing of any vehicle, rolling stock, track, or any part of any part of any such item when such examination or testing is determined to be required for purposes of such investigation.

(b) Any examination or testing shall be conducted in such a manner so as not to interfere with or obstruct unnecessarily the transportation services provided by the owner or operator of such vehicle, rolling stock, or track, and shall be conducted in such a manner so as to preserve, to the maximum extent feasible, any evidence relating to the transportation accident, consistent with the needs of the investigation and with the cooperation of such owner or operator. The employee may inspect, at reasonable times, records, files, papers, processes, controls, and facilities relevant to the investigation of such accident. Each inspection shall be commenced and completed promptly and the results of such inspection, examination, or test made available to the parties.

[47 FR 49408, Nov. 1, 1982]

§ 840.6 Priority of Board investigations.

Any investigation of an accident conducted by the Safety Board shall have priority over all other investigations of such accident conducted by other Federal agencies. The Safety Board shall provide for the appropriate participation by other Federal agencies in any

such investigation, except that such agencies may not participate in the Safety Board's determination of the probable cause of the accident. Nothing in this section impairs the authority of other Federal agencies to conduct investigations of an accident under applicable provisions of law or to obtain information directly from parties involved in, and witnesses to, the transportation accident. The Safety Board and other Federal agencies shall assure that appropriate information obtained or developed in the course of their investigations is exchanged in a timely manner.

[47 FR 49408, Nov. 1, 1982]

PART 845—RULES OF PRACTICE IN TRANSPORTATION; ACCIDENT/INCIDENT HEARINGS AND REPORTS

Sec.

845.1 Applicability.
845.2 Nature of hearing.
845.3 Sessions open to the public.

Subpart A—Initial Procedure

845.10 Determination to hold hearing.
845.11 Board of inquiry.
845.12 Notice of hearing.
845.13 Designation of parties.

Subpart B—Conduct of Hearing

845.20 Powers of chairman of board of inquiry.
845.21 Hearing officer.
845.22 Technical panel.
845.23 Prehearing conference.
845.24 Right of representation.
845.25 Examination of witnesses.
845.26 Evidence.
845.27 Proposed findings.
845.28 Stenographic transcript.
845.29 Payment of witnesses.

Subpart C—Board Reports

845.40 Accident report.
845.41 Petitions for reconsideration or modification.

Subpart D—Public Record

845.50 Public docket.
845.51 Investigation to remain open.

AUTHORITY: Title VII, Federal Aviation Act of 1958, as amended (49 U.S.C. 1441 *et seq.*); and the Independent Safety Board Act of 1974, Pub. L. 93–633, 88 Stat. 2166 (49 U.S.C. 1901 *et seq.)*.

SOURCE: 44 FR 34419, June 14, 1979, unless otherwise noted.

§ 845.1 Applicability.

Unless otherwise specifically ordered by the National Transportation Safety Board (Board), the provisions of this part shall govern all transportation accident investigation hearings conducted under the authority of section 304(b) of the Independent Safety Board Act of 1974 (49 U.S.C. 1903(b)) and accident reports issued by the Board.

§ 845.2 Nature of hearing.

Transportation accident hearings are convened to assist the Board in determining cause or probable cause of an accident, in reporting the facts, conditions, and circumstances of the accident, and in ascertaining measures which will tend to prevent accidents and promote transportation safety. Such hearings are factfinding proceedings with no formal issues and no adverse parties and are not subject to the provisions of the Administrative Procedure Act (Pub. L. 89–554, 80 Stat. 384 (5 U.S.C. 554)).

[44 FR 34419, June 14, 1979; 44 FR 39181, July 5, 1979]

§ 845.3 Sessions open to the public.

(a) All hearings shall normally be open to the public (subject to the provision that any person present shall not be allowed at any time to interfere with the proper and orderly functioning of the board of inquiry).

(b) Sessions shall not be open to the public when evidence of a classified nature or which affects national security is to be received.

Subpart A—Initial Procedure

§ 845.10 Determination to hold hearing.

The Board may order a public hearing as part of an accident investigation whenever such hearing is deemed necessary in the public interest: *Provided,* that if a quorum of the Board is not immediately available in the event of a

catastrophic accident, the determination to hold a public hearing may be made by the Chairman of the Board.

§ 845.11 Board of inquiry.

The board of inquiry shall consist of a Member of the Board who shall be chairman of the board of inquiry, and such other employees as may be designated by the chairman of the board of inquiry. Assignment of a Member to serve as the chairman of each board of inquiry shall be determined by the Board. The board of inquiry shall examine witnesses and secure, in the form of a public record, all known facts pertaining to the accident or incident and surrounding circumstances and conditions from which cause or probable cause may be determined and recommendations for corrective action may be formulated.

[49 FR 32853, Aug. 17, 1984]

§ 845.12 Notice of hearing.

The chairman of the board of inquiry shall designate a time and place for the hearing which meets the needs of the Board. Notice to all known interested persons shall be given.

§ 845.13 Designation of parties.

(a) The chairman of the board of inquiry shall designate as parties to the hearing those persons, agencies, companies, and associations whose participation in the hearing is deemed necessary in the public interest and whose special knowledge will contribute to the development of pertinent evidence. Parties shall be represented by suitable qualified technical employees or members who do not occupy legal positions.

(b) No party shall be represented by any person who also represents claimants or insurers. Failure to comply with this provision shall result in loss of status as a party.

[44 FR 34419, June 14, 1979, as amended at 51 FR 7278, Mar. 3, 1986]

Subpart B—Conduct of Hearing

§ 845.20 Powers of chairman of board of inquiry.

The chairman of the board of inquiry, or his designee, shall have the following powers:

(a) To designate parties to the hearing and revoke such designations;

(b) To open, continue, or adjourn the hearing;

(c) To determine the admissibility of and to receive evidence and to regulate the course of the hearing;

(d) To dispose of procedural requests or similar matters; and

(e) To take any other action necessary or incident to the orderly conduct of the hearing.

[44 FR 34419, June 14, 1979; 44 FR 39181, July 5, 1979]

§ 845.21 Hearing officer.

The hearing officer, upon designation by the Chairman of the Board, shall have the following powers:

(a) To give notice concerning the time and place of hearing;

(b) To administer oaths and affirmations to witnesses; and

(c) To issue subpenas requiring the attendance and testimony of witnesses and production of documents.

§ 845.22 Technical panel.

The Director, Bureau of Accident Investigation, or the Director, Bureau of Field Operations, shall designate members of the Board's technical staff to participate in the hearing and initially develop the testimony of witnesses.

[49 FR 32853, Aug. 17, 1984]

§ 845.23 Prehearing conference.

(a) Except as provided in paragraph (d) of this section for expedited hearings, the chairman of the board of inquiry shall hold a prehearing conference with the parties to the hearing at a convenient time and place prior to the hearing. At such prehearing conference, the parties shall be advised of the witnesses to be called at the hearing, the areas in which they will be examined, and the exhibits which will be offered in evidence.

(b) Parties shall submit at the prehearing conference copies of any additional documentary exhibits they desire to offer. (Copies of all exhibits proposed for admission by the board of inquiry and the parties shall be furnished to the board of inquiry and to all parties, insofar as available at that time.)

(c) A party who, at the time of the prehearing conference, fails to advise the chairman of the board of inquiry of additional exhibits he intends to submit, or additional witnesses he desires to examine, shall be precluded from introducing such evidence unless the chairman of the board of inquiry determines for good cause shown that such evidence should be admitted.

(d) *Expedited hearings.* When time permits, the chairman of the board of inquiry may hold a prehearing conference. In the event that an expedited hearing is held, the requirements in paragraphs (b) and (c) of this section concerning the identification of witnesses, exhibits or other evidence may be waived by the chairman of the board of inquiry.

§ 845.24 Right of representation.

Any person who appears to testify at a public hearing shall be accorded the right to be accompanied, represented, or advised by counsel or by any other duly qualified representative.

§ 845.25 Examination of witnesses.

(a) Witnesses shall be initially examined by the board of inquiry or its technical panel. Following such examination, parties to the hearing shall be given the opportunity to examine such witnesses.

(b) Materiality, relevancy, and competency of witness testimony, exhibits, or physical evidence shall not be the subject of objections in the legal sense by a party to the hearing or any other person. Such matters shall be controlled by rulings of the chairman of the board of inquiry on his own motion. If the examination of a witness by a party is interrupted by a ruling of the chairman of the board of inquiry, opportunity shall be given to show materiality, relevancy, or competency of the testimony or evidence sought to be elicited from the witness.

§ 845.26 Evidence.

The chairman of the board of inquiry shall receive all testimony and evidence which may be of aid in determining the cause of accident. He may exclude any testimony or exhibits which are not pertinent to the investigation or are merely cumulative.

§ 845.27 Proposed findings.

Any party may submit proposed findings to be drawn from the testimony and exhibits, a proposed probable cause, and proposed safety recommendations designed to prevent future accidents. The proposals shall be submitted within the time specified by the presiding officer at the close of the hearing, and shall be made a part of the public docket. Parties to the hearing shall serve copies of their proposals on all other parties to the hearing.

[48 FR 52740, Nov. 22, 1983]

§ 845.28 Stenographic transcript.

A verbatim report of the hearing shall be taken. Copies of the transcript may be obtained by any interested person from the Board or from the court reporting firm preparing the transcript upon payment of the fees fixed therefor. (See part 801, Appendix—Fee Schedule.)

§ 845.29 Payment of witnesses.

Any witness subpenaed to attend the hearing under this part shall be paid such fees for his travel and attendance as shall be certified by the hearing officer.

Subpart C—Board Reports

§ 845.40 Accident report.

(a) The Board will issue a detailed narrative accident report in connection with the investigation into those accidents which the Board determines to warrant such a report. The report will set forth the facts, conditions and circumstances relating to the accident and the probable cause thereof, along with any appropriate recommendations formulated on the basis of the investigation.

(b) The probable cause and facts, conditions, and circumstances of all other accidents will be reported in a manner and form prescribed by the Board.

§ 845.41 Petitions for reconsideration or modification.

(a) Petitions for reconsideration or modification of the Board's findings and determination of probable cause filed by a party to an investigation or hearing or other person having a direct

interest in the accident investigation will be entertained only if based on the discovery of new evidence or on a showing that the Board's findings are erroneous. The petitions shall be in writing. Petitions which are repetitious of proposed findings submitted pursuant to § 845.27, or of positions previously advanced, and petitions filed by a party to the hearing who failed to submit proposed findings pursuant to § 845.27 will not be entertained. Petitions based on the discovery of new matter shall: identify the new matter; contain affidavits of prospective witnesses, authenticated documents, or both, or an explanation of why such substantiation is unavailable; and state why the new matter was not available prior to Board's adoption of its findings. Petitions based on a claim of erroneous findings shall set forth in detail the grounds relied upon.

(b) When a petition for reconsideration or modification is filed with the Board, copies of the petition and any supporting documentation shall be served on all other parties to the investigation or hearing and proof of service shall be attached to the petition. The other parties may file comments no later than 90 days after service of the petition.

(c) Oral presentation before the Board normally will not form a part of proceedings under this part. However, the Board may permit oral presentation where a party or interested person makes an affirmative showing that the written petition for reconsideration or modification is an insufficient means to present the party's or person's position to the Board. Where oral presentation is allowed, the Board will specify the issues to be addressed and all parties to the investigation or hearing will be given notice and the opportunity to participate.

[48 FR 52740, Nov. 22, 1983]

Subpart D—Public Record

§ 845.50 Public docket.

(a) The public docket shall include all factual information concerning the accident. Proposed findings submitted pursuant to § 831.12 or § 845.27 and petitions for reconsideration and modification submitted pursuant to § 845.41, comments thereon by other parties, and the Board's rulings, shall also be placed in the public docket.

(b) The docket shall be established as soon as practicable following the accident, and material shall be added thereto as it becomes available. Where a hearing is held, the exhibits will be introduced into the record at the hearing.

(c) A copy of the docket shall be made available to any person for review at the Washington office of the Board. Copies of the material in the docket may be obtained, upon payment of the cost of reproduction, from the Public Inquiries Section, Bureau of Administration, National Transportation Safety Board, Washington, DC 20594.

[44 FR 34419, June 14, 1979, as amended at 48 FR 52740, Nov. 22, 1983]

§ 845.51 Investigation to remain open.

Accident investigations are never officially closed but are kept open for the submission of new and pertinent evidence by any interested person. If the Board finds that such evidence is relevant and probative, it shall be made a part of the docket and, where appropriate, parties will be given an opportunity to examine such evidence and to comment thereon.

PART 850—COAST GUARD—NATIONAL TRANSPORTATION SAFETY BOARD MARINE CASUALTY INVESTIGATIONS

Sec.

850.1 Purpose.
850.3 Relationship to Coast Guard marine investigation regulations and procedures.
850.5 Definitions.
850.10 Preliminary investigation by the Coast Guard.
850.15 Marine casualty investigation by the Board.
850.20 Cause or probable cause determinations from Board investigation.
850.25 Coast Guard marine casualty investigation for the Board.
850.30 Procedures for Coast Guard investigation.
850.35 Records of the Coast Guard and the Board.

AUTHORITY: Sec. 304(a)(1)(E), Independent Safety Board Act of 1974, Pub. L. 93–633, 88 Stat. 2168 (49 U.S.C. 1903).

SOURCE: 42 FR 61204, Dec. 1, 1977, unless otherwise noted.

§ 850.1 Purpose.

This part prescribes the joint regulations of the National Transportation Safety Board and the Coast Guard for the investigation of marine casualties.

[47 FR 46089, Oct. 15, 1982]

§ 850.3 Relationship to Coast Guard marine investigation regulations and procedures.

(a) The Coast Guard's responsibility to investigate marine casualties is not eliminated nor diminished by the regulations in this part.

(b) In those instances where the Board conducts an investigation in which the Coast Guard also has responsibility under R.S. 4450 (46 U.S.C. 239), the proceedings are conducted independently, but so as to avoid duplication as much as possible.

§ 850.5 Definitions.

As used in this part:

(a) *Act* means Title III of Pub. L. 93–633, the Independent Safety Board Act of 1974 (49 U.S.C. 1901, *et seq.*).

(b) *Board* means the National Transportation Safety Board.

(c) *Chairman* means the Chairman of the National Transportation Safety Board.

(d) *Commandant* means the Commandant of the Coast Guard.

(e) *Major marine casualty* means a casualty involving a vessel, other than a public vessel, that results in—

(1) The loss of six or more lives;

(2) The loss of a mechanically propelled vessel of 100 or more gross tons;

(3) Property damage initially estimated as $500,000 or more; or

(4) Serious threat, as determined by the Commandant and concurred in by the Chairman, to life, property, or the environment by hazardous materials.

(f) *Public vessel* means a vessel owned by the United States, except a vessel to which the Act of October 25, 1919, c. 82 (41 Stat. 305, 46 U.S.C. 363) applies.

(g) *Vessel of the United States* means a vessel—

(1) Documented, or required to be documented, under the laws of the United States;

(2) Owned in the United States; or

(3) Owned by a citizen or resident of the United States and not registered under a foreign flag.

§ 850.10 Preliminary investigation by the Coast Guard.

(a) The Coast Guard conducts the preliminary investigation of marine casualties.

(b) The Commandant determines from the preliminary investigation whether:

(1) The casualty is a major marine casualty; or

(2) The casualty involves a public and a nonpublic vessel and at least one fatality or $75,000 in property damage; or

(3) The casualty involves a Coast Guard and a nonpublic vessel and at least one fatality or $75,000 in property damage; or

(4) The casualty is a major marine casualty which involves significant safety issues relating to Coast Guard safety functions, e.g., search and rescue, aids to navigation, vessel traffic systems, commercial vessel safety, etc.

(c) The Commandant notifies the Board of a casualty described in paragraph (b) of this section.

[42 FR 61204, Dec. 1, 1977, as amended at 47 FR 46089, Oct. 15, 1982]

§ 850.15 Marine casualty investigation by the Board.

(a) The Board may conduct an investigation under the Act of any major marine casualty or any casualty involving public and nonpublic vessels. Where the Board determines it will convene a hearing in connection with such an investigation, the Board's rules of practice for transportation accident hearings in 49 CFR part 845 shall apply.

(b) The Board shall conduct an investigation under the Act when:

(1) The casualty involves a Coast Guard and a nonpublic vessel and at least one fatality or $75,000 in property damage; or

(2) The Commandant and the Board agree that the Board shall conduct the investigation, and the casualty involves a public and a nonpublic vessel and at least one fatality or $75,000 in property damage; or

(3) The Commandant and the Board agree that the Board shall conduct the

investigation, and the casualty is a major marine casualty which involves significant safety issues relating to Coast Guard safety functions.

[47 FR 46090, Oct. 15, 1982]

§ 850.20 Cause or probable cause determinations from Board investigation.

After an investigation conducted by the Board under § 850.15, the Board determines cause or probable cause and issues a report of that determination.

§ 850.25 Coast Guard marine casualty investigation for the Board.

(a) If the Board does not conduct an investigation under § 850.15(a), (b)(2) or (3), the Coast Guard, at the request of the Board, may conduct an investigation under the Act unless there is an allegation of Federal Government misfeasance or nonfeasance.

(b) The Board will request the Coast Guard to conduct an investigation under paragraph (a) of this section within 48 hours of receiving notice under § 850.10(c).

(c) The Coast Guard will advise the Board within 24 hours of receipt of a request under paragraph (b) of this section whether the Coast Guard will conduct an investigation under the Act.

[47 FR 46090, Oct. 15, 1982]

§ 850.30 Procedures for Coast Guard investigation.

(a) The Coast Guard conducts an investigation under § 850.25 using the procedures in 46 CFR 4.01–1 through 4.23–1.

(b) The Board may designate a person or persons to participate in every phase of an investigation, including on-scene investigation, that is conducted under the provisions of § 850.25.

(c) Consistent with Coast Guard responsibility to direct the course of the investigation, the person or persons designated by the Board under paragraph (b) of this section may:

(1) Make recommendations about the scope of the investigation.

(2) Call and examine witnesses.

(3) Submit or request additional evidence.

(d) The Commandant provides a record of the proceedings to the Board of an investigation of a major marine casualty under paragraph (a) of this section.

(e) The Board, under the Act, makes its determination of the facts, conditions, and circumstances, and the cause or probable cause of a major marine casualty, using the record of the proceedings provided by the Commandant under paragraph (d) of this section and any additional evidence the Board may acquire under its own authority.

(f) An investigation by the Coast Guard under this section is both an investigation under the Act and under R.S. 4450 (46 U.S.C. 239).

§ 850.35 Records of the Coast Guard and the Board.

(a) Records of the Coast Guard made under § 850.30 are available to the public under 49 CFR part 7.

(b) Records of the Board made under §§ 850.20 and 850.30 are available to the public under 49 CFR part 801.

PARTS 851–999 [RESERVED]