AUTHENTICATED
U.S. GOVERNMENT
INFORMATION
GPO

projects financial assistance in the program guidance/solicitation.

(b) In addition to any other requirements, all applications shall provide:

(1) A detailed description of the proposed project, including the objectives of the project in relationship to DOE's program and the State's plan for carrying it out;

(2) A detailed budget for the entire proposed period of support, with written justification sufficient to evaluate the itemized list of costs provided on the entire project; and

(3) An implementation schedule for carrying out the project.

(c) DOE may, subsequent to receipt of an application, request additional budgetary information from a State when necessary for clarification or to make informed preaward determinations.

(d) DOE may return an application which does not include all information and documentation required by this subpart, 10 CFR part 600, or the program guidance/solicitation, when the nature of the omission precludes review of the application.

[61 FR 35895, July 8, 1996, as amended at 64 FR 46114, Aug. 24, 1999]

§ 420.34 Matching contributions or cost-sharing.

DOE may require (as set forth in the program guidance/solicitation) States to provide either:

(a) A matching contribution of at least a specified percentage of the Federal financial assistance award; or

(b) A specified share of the total cost of the project for which financial assistance is provided.

§ 420.35 Application evaluation.

(a) DOE staff at the cognizant Regional Office shall perform an initial review of all applications to ensure that the State has provided the information required by this subpart, 10 CFR part 600, and the program guidance/solicitation.

(b) DOE shall group, and technically evaluate according to program activity, all applications determined to be complete and satisfactory.

(c) DOE shall select evaluators on the basis of their professional qualifications and expertise relating to the particular program activity being evaluated.

(1) DOE anticipates that evaluators will primarily be DOE employees; but

(2) If DOE uses non-DOE evaluators, DOE shall require them to comply with all applicable DOE rules or directives concerning the use of outside evaluators.

[61 FR 35895, July 8, 1996, as amended at 64 FR 46114, Aug. 24, 1999]

§ 420.36 Evaluation criteria.

The evaluation criteria, including program activity-specific criteria, will be set forth in the program guidance/solicitation document.

§ 420.37 Selection.

(a) DOE may make selection of applications for award based on:

(1) The findings of the technical evaluations;

(2) The priorities of DOE, SEP, and the participating program offices;

(3) The availability of funds for the various special project activities; and

(4) Any program policy factors set forth in the program guidance/solicitation.

(b) The Director, Office of State and Community Programs makes the final selections of projects to be awarded financial assistance.

§ 420.38 Special projects expenditure prohibitions and limitations.

(a) Expenditures under the special projects are subject to 10 CFR part 600 and to any prohibitions and limitations required by the DOE programs that are providing the special projects funding.

(b) DOE must state any expenditure prohibitions or limitations specific to a particular category of special projects in the annual SEP special projects solicitation/guidance.

[64 FR 46114, Aug. 24, 1999]

PART 430—ENERGY CONSERVATION PROGRAM FOR CONSUMER PRODUCTS

Subpart A—General Provisions

Sec.

430.1 Purpose and scope.
430.2 Definitions.

Subpart B—Test Procedures

430.21 Purpose and scope.
430.22 Reference sources.
430.23 Test procedures for the measurement of energy and water consumption.
430.24 Units to be tested.
430.25 Laboratory Accreditation Program.
430.27 Petitions for waiver and applications for interim waiver.

APPENDIX A1 TO SUBPART B OF PART 430—UNIFORM TEST METHOD FOR MEASURING THE ENERGY CONSUMPTION OF ELECTRIC REFRIGERATORS AND ELECTRIC REFRIGERATOR-FREEZERS
APPENDIX B1 (ALTERNATIVE) TO SUBPART B OF PART 430—UNIFORM TEST METHOD FOR MEASURING THE ENERGY CONSUMPTION OF FREEZERS
APPENDIX C TO SUBPART B OF PART 430—UNIFORM TEST METHOD FOR MEASURING THE ENERGY CONSUMPTION OF DISHWASHERS
APPENDIX D TO SUBPART B OF PART 430—UNIFORM TEST METHOD FOR MEASURING THE ENERGY CONSUMPTION OF CLOTHES DRYERS
APPENDIX E TO SUBPART B OF PART 430—UNIFORM TEST METHOD FOR MEASURING THE ENERGY CONSUMPTION OF WATER HEATERS
APPENDIX F TO SUBPART B OF PART 430—UNIFORM TEST METHOD FOR MEASURING THE ENERGY CONSUMPTION OF ROOM AIR CONDITIONERS
APPENDIX G TO SUBPART B OF PART 430—UNIFORM TEST METHOD FOR MEASURING THE ENERGY CONSUMPTION OF UNVENTED HOME HEATING EQUIPMENT
APPENDIX H TO SUBPART B OF PART 430—UNIFORM TEST METHOD FOR MEASURING THE ENERGY CONSUMPTION OF TELEVISION SETS
APPENDIX I TO SUBPART B OF PART 430—UNIFORM TEST METHOD FOR MEASURING THE ENERGY CONSUMPTION OF CONVENTIONAL RANGES, CONVENTIONAL COOKING TOPS, CONVENTIONAL OVENS, AND MICROWAVE OVENS
APPENDIX J TO SUBPART B OF PART 430—UNIFORM TEST METHOD FOR MEASURING THE ENERGY CONSUMPTION OF AUTOMATIC AND SEMI-AUTOMATIC CLOTHES WASHERS
APPENDIX J1 TO SUBPART B OF PART 430—UNIFORM TEST METHOD FOR MEASURING THE ENERGY CONSUMPTION OF AUTOMATIC AND SEMI-AUTOMATIC CLOTHES WASHERS
APPENDIXES K–L TO SUBPART B OF PART 430 [RESERVED]
APPENDIX M TO SUBPART B OF PART 430—UNIFORM TEST METHOD FOR MEASURING THE ENERGY CONSUMPTION OF CENTRAL AIR CONDITIONERS
APPENDIX N TO SUBPART B OF PART 430—UNIFORM TEST METHOD FOR MEASURING THE ENERGY CONSUMPTION OF FURNACES AND BOILERS
APPENDIX O TO SUBPART B OF PART 430—UNIFORM TEST METHOD FOR MEASURING THE ENERGY CONSUMPTION OF VENTED HOME HEATING EQUIPMENT
APPENDIX P TO SUBPART B OF PART 430—UNIFORM TEST METHOD FOR MEASURING THE ENERGY CONSUMPTION OF POOL HEATERS
APPENDIX Q TO SUBPART B OF PART 430—UNIFORM TEST METHOD FOR MEASURING THE ENERGY CONSUMPTION OF FLUORESCENT LAMP BALLASTS
APPENDIX R TO SUBPART B OF PART 430—UNIFORM TEST METHOD FOR MEASURING AVERAGE LAMP EFFICACY (LE) AND COLOR RENDERING INDEX (CRI) OF ELECTRIC LAMPS
APPENDIX S TO SUBPART B OF PART 430—UNIFORM TEST METHOD FOR MEASURING THE WATER CONSUMPTION OF FAUCETS AND SHOWERHEADS
APPENDIX T TO SUBPART B OF PART 430—UNIFORM TEST METHOD FOR MEASURING THE WATER CONSUMPTION OF WATER CLOSETS AND URINALS

Subpart C—Energy and Water Conservation Standards

430.31 Purpose and scope.
430.32 Energy and water conservation standards and effective dates.
430.33 Preemption of State regulations.
430.34 Energy and water conservation standards amendments.

APPENDIX A TO SUBPART C OF PART 430—PROCEDURES, INTERPRETATIONS AND POLICIES FOR CONSIDERATION OF NEW OR REVISED ENERGY CONSERVATION STANDARDS FOR CONSUMER PRODUCTS

Subpart D—Petitions To Exempt State Regulation From Preemption; Petitions to Withdraw Exemption of State Regulation

430.40 Purpose and scope.
430.41 Prescriptions of a rule.
430.42 Filing requirements.
430.43 Notice of petition.
430.44 Consolidation.
430.45 Hearing.
430.46 Disposition of petitions.
430.47 Effective dates of final rules.
430.48 Request for reconsideration.
430.49 Finality of decision.

Subpart E—Small Business Exemptions

430.50 Purpose and scope.
430.51 Eligibility.
430.52 Requirements for applications.
430.53 Processing of applications.
430.54 Referral to the Attorney General.
430.55 Evaluation of application.
430.56 Decision and order.
430.57 Duration of temporary exemption.

Subpart F—Certification and Enforcement

430.60 Purpose and scope.

430.61 Prohibited acts.
430.62 Submission of data.
430.63 Sampling.
430.64 Imported products.
430.65 Exported products.
430.70 Enforcement.
430.71 Cessation of distribution of a basic model.
430.72 Subpoena.
430.73 Remedies.
430.74 Hearings and Appeals.
430.75 Confidentiality.
APPENDIX A TO SUBPART F OF PART 430—COMPLIANCE STATEMENT AND CERTIFICATION REPORT.
APPENDIX B TO SUBPART F OF PART 430—SAMPLING PLAN FOR ENFORCEMENT TESTING.

AUTHORITY: 42 U.S.C. 6291–6309; 28 U.S.C. 2461 note.

SOURCE: 42 FR 27898, June 1, 1977, unless otherwise noted.

Subpart A—General Provisions

430.1 § Purpose and scope.

This part establishes the regulations for the implementation of part B of title III (42 U.S.C. 6291–6309) of the Energy Policy and Conservation Act (Pub. L. 94–163), as amended by Pub. L. 95–619, Pub. L. 100–12, Pub. L. 100–357, and Pub. L. 102–486 which establishes an energy conservation program for consumer products other than automobiles.

[62 FR 29237, May 29, 1997]

§ 430.2 Definitions.

For purposes of this part, words shall be defined as provided for in section 321 of the Act and as follows—

Act means the Energy Policy and Conservation Act (Pub. L. 94–163), as amended by the National Energy Policy Conservation Act (Pub. L. 95–619), the National Appliance Energy Conservation Act of 1987 (Pub. L. 100–12), the National Appliance Energy Conservation Amendments of 1988 (Pub. L. 100–357), and the Energy Policy Act of 1992 (Pub. L. 102–486).

Annual fuel utilization efficiency means the efficiency descriptor for furnaces and boilers, determined using test procedures prescribed under section 323 and based on the assumption that all—

(a) Weatherized warm air furnaces or boilers are located out-of-doors;

(b) Warm air furnaces which are not weatherized are located indoors and all combustion and ventilation air is admitted through grill or ducts from the outdoors and does not communicate with air in the conditioned space;

(c) Boilers which are not weatherized are located within the heated space.

ANSI means the American National Standards Institute.

ASME means the American Society of Mechanical Engineers.

Automatic clothes washer means a class of clothes washer which has a control system which is capable of scheduling a preselected combination of operations, such as regulation of water temperature, regulation of the water fill level, and performance of wash, rinse, drain, and spin functions without the need for user intervention subsequent to the initiation of machine operation. Some models may require user intervention to initiate these different segments of the cycle after the machine has begun operation, but they do not require the user to intervene to regulate the water temperature by adjusting the external water faucet valves.

Ballast efficacy factor means the relative light output divided by the power input of a fluorescent lamp ballast, as measured under test conditions specified in ANSI Standard C82.2–1984.

Baseboard electric heater means an electric heater which is intended to be recessed in or surface mounted on walls at floor level, which is characterized by long, low physical dimensions, and which transfers heat by natural convection and/or radiation.

Basic model means all units of a given type of covered product (or class thereof) manufactured by one manufacturer and—

(1) With respect to refrigerators and refrigerator-freezers, which have the same primary energy source, which have electrical characteristics that are essentially identical, and which do not have any differing physical or functional characteristics that affect energy consumption.

(2) With respect to freezers, which have the same primary energy source, which have electrical characteristics that are essentially identical, and

which do not have any differing physical or functional characteristics that affect energy consumption.

(3) With respect to dishwashers, which have electrical characteristics which are essentially identical and which do not have any differing physical or functional characteristics which affect energy consumption.

(4) With respect to clothes dryers, which have the same primary energy source, which have electrical characteristics that are essentially identical, and which do not have any differing physical or functional characteristics that affect energy consumption.

(5) With respect to water heaters, which have the same primary energy source and which, with the exception of immersed heating elements, do not have any differing electrical, physical, or functional characteristics that affect energy consumption.

(6) With respect to room air conditioners, having essentially identical functional physical and electrical characteristics.

(7) With respect to unvented home heating equipment, having essentially identical functional physical and electrical characteristics.

(8) With respect to television sets, which have identical screen size, which have electrical characteristics that are essentially identical, and which do not have any differing physical or functional characteristics that affect energy consumption.

(9) With respect to kitchen ranges and ovens, whose major cooking components have the same primary energy source, which have electrical characteristics that are essentially identical, and which do not have any differing physical or functional characteristics that affect energy consumption.

(10) With respect to clothes washers, which have the same primary energy source, which have electrical characteristics that are essentially identical, and which do not have any differing physical or functional characteristics that affect energy consumption.

(11) With respect to central air conditioners, which have electrical characteristics which are essentially identical and which do not have any differing physical or functional characteristics that affect energy consumption.

(12) With respect to furnaces, having the same primary energy source and essentially identical functional, physical and electrical characteristics.

(13) With respect to vented home heating equipment, having the same primary energy source and essentially identical functional, physical and electrical characteristics.

(14) With respect to fluorescent lamp ballasts, which have electrical characteristics, including a Power Factor (P.F.) of equal value, which are essentially identical, and which do not have any differing physical or functional characteristics that affect energy consumption.

(15) With respect to general service fluorescent lamps, means lamps that have essentially identical light output and electrical characteristics—including lumens per watt and color rendering index (CRI)—and that do not have any differing physical or functional characteristics that affect energy consumption or efficacy.

(16) With respect to incandescent reflector lamps, means lamps that have essentially identical light output and electrical characteristics—including lumens per watt—and that do not have any differing physical or functional characteristics that affect energy consumption or efficacy.

(17) With respect to faucets, which have the identical flow control mechanism attached to or installed within the fixture fittings, or the identical water-passage design features that use the same path of water in the highest-flow mode.

(18) With respect to showerheads, which have the identical flow control mechanism attached to or installed within the fixture fittings, or the identical water-passage design features that use the same path of water in the highest-flow mode.

(19) With respect to water closets, which have hydraulic characteristics that are essentially identical, and which do not have any differing physical or functional characteristics that affect water consumption.

(20) With respect to urinals, which have hydraulic characteristics that are essentially identical, and which do not

have any differing physical or functional characteristics that affect water consumption.

Batch means a collection of production units of a basic model from which a batch sample is selected.

Batch sample means the collection of units of the same basic model from which test units are selected.

Batch sample size means the number of units in a batch sample.

Batch size means the number of units in a batch.

Blowout has the meaning given such a term in ASME A112.19.2M–1995. (see § 430.22)

BR incandescent reflector lamp means a reflector lamp that has a bulged section below the bulb's major diameter and above its approximate base line as shown in Figure 1 (RB) on page 7 of ANSI C79.1–1994. A BR30 lamp has a lamp wattage of 85 or less than 66 and a BR40 lamp has a lamp wattage of 120 or less.

Btu means British thermal unit, which is the quantity of heat required to raise the temperature of one pound of water one degree Fahrenheit.

Casement-only means a room air conditioner designed for mounting in a casement window with an encased assembly with a width of 14.8 inches or less and a height of 11.2 inches or less.

Casement-slider means a room air conditioner with an encased assembly designed for mounting in a sliding or casement window with a width of 15.5 inches or less.

Ceiling electric heater means an electric heater which is intended to be recessed in, surface mounted on, or hung from a ceiling, and which transfers heat by radiation and/or convection (either natural or forced).

Ceiling fan means a nonportable device that is suspended from a ceiling for circulating air via the rotation of fan blades.

Ceiling fan light kit means equipment designed to provide light from a ceiling fan that can be—

(1) Integral, such that the equipment is attached to the ceiling fan prior to the time of retail sale; or

(2) Attachable, such that at the time of retail sale the equipment is not physically attached to the ceiling fan, but may be included inside the ceiling fan at the time of sale or sold separately for subsequent attachment to the fan.

Central air conditioner means a product, other than a packaged terminal air conditioner, which is powered by single phase electric current, air cooled, rated below 65,000 Btu per hour, not contained within the same cabinet as a furnace, the rated capacity of which is above 225,000 Btu per hour, and is a heat pump or a cooling unit only.

Central system humidifier means a class of humidifier designed to add moisture into the air stream of a heating system.

Clothes washer means a consumer product designed to clean clothes, utilizing a water solution of soap and/or detergent and mechanical agitation or other movement, and must be one of the following classes: automatic clothes washers, semi-automatic clothes washers, and other clothes washers.

Coil family means a group of coils with the same basic design features that affect the heat exchanger performance. These features are the basic configuration, i.e., A-shape, V-shape, slanted or flat top, the heat transfer surfaces on refrigerant and air sides (flat tubes vs. grooved tubes, fin shapes), the tube and fin materials, and the coil circuitry. When a group of coils has all these features in common, it constitutes a ''coil family.''

Cold temperature fluorescent lamp means a fluorescent lamp specifically designed to start at −20 °F when used with a ballast conforming to the requirements of ANSI Standard C78.1–1991, and is expressly designated as a cold temperature lamp both in markings on the lamp and in marketing materials, including but not limited to catalogs, sales literature, and promotional material.

Colored fluorescent lamp means a fluorescent lamp designated and marketed as a colored lamp, and with either of the following characteristics: a CRI less than 40, as determined according to the method given in CIE Publication 13.2 (see 10 CFR 430.22), or a lamp correlated color temperature less than 2,500K or greater than 6,600K.

Colored incandescent lamp means an incandescent lamp designated and marketed as a colored lamp that has a CRI less than 50, as determined according to the method given in CIE Publication 13.2 (see 10 CFR 430.22); has a correlated color temperature less than 2,500K or greater than 4,600K; has a lens containing 5 percent or more neodymium oxide; or contains a filter to suppress yellow and green portions of the spectrum and is specifically designed, designated and marketed as a plant light.

Color Rendering Index or CRI means the measured degree of color shift objects undergo when illuminated by a light source as compared with the color of those same objects when illuminated by a reference source of comparable color temperature.

Color television set means an electrical device designed to convert incoming broadcast signals into color television pictures and associated sound.

Compact refrigerator/refrigerator-freezer/freezer means any refrigerator, refrigerator-freezer or freezer with total volume less than 7.75 cubic feet (220 liters)(rated volume as determined in Appendix A1 and B1 of subpart B of this part) and 36 inches (0.91 meters) or less in height.

Condenser-evaporator coil combination means a condensing unit made by one manufacturer and one of several evaporator coils, either manufactured by the same manufacturer or another manufacturer, intended to be combined with that particular condensing unit.

Condensing unit means a component of a central air conditioner which is designed to remove the heat absorbed by the refrigerant and to transfer it to the outside environment, and which consists of an outdoor coil, compressor(s), and air moving device.

Consumer product means any article (other than an automobile, as defined in Section 501(1) of the Motor Vehicle Information and Cost Savings Act):

(1) Of a type—

(i) Which in operation consumes, or is designed to consume, energy or, with respect to showerheads, faucets, water closets, and urinals, water; and

(ii) Which, to any significant extent, is distributed in commerce for personal use or consumption by individuals;

(2) Without regard to whether such article of such type is in fact distributed in commerce for personal use or consumption by an individual, except that such term includes fluorescent lamp ballasts, general service fluorescent lamps, incandescent reflector lamps, showerheads, faucets, water closets, and urinals distributed in commerce for personal or commercial use or consumption.

Conventional cooking top means a class of kitchen ranges and ovens which is a household cooking appliance consisting of a horizontal surface containing one or more surface units which include either a gas flame or electric resistance heating.

Conventional oven means a class of kitchen ranges and ovens which is a household cooking appliance consisting of one or more compartments intended for the cooking or heating of food by means of either a gas flame or electric resistance heating. It does not include portable or countertop ovens which use electric resistance heating for the cooking or heating of food and are designed for an electrical supply of approximately 120 volts.

Conventional range means a class of kitchen ranges and ovens which is a household cooking appliance consisting of a conventional cooking top and one or more conventional ovens.

Convertible cooking appliance means any kitchen range and oven which is a household cooking appliance designed by the manufacturer to be changed in service from use with natural gas to use with LP-gas, and vice versa, by incorporating in the appliance convertible orifices for the main gas burners and a convertible gas pressure regulator.

Cooking products means consumer products that are used as the major household cooking appliances. They are designed to cook or heat different types of food by one or more of the following sources of heat: gas, electricity, or microwave energy. Each product may consist of a horizontal cooking top containing one or more surface units and/or one or more heating compartments. They must be one of the following classes: conventional ranges,

conventional cooking tops, conventional ovens, microwave ovens, microwave/conventional ranges and other cooking products.

Correlated color temperature means the absolute temperature of a blackbody whose chromaticity most nearly resembles that of the light source.

Covered product means a consumer product of a type specified in section 322 of the Act.

Dehumidifier means a self-contained, electrically operated, and mechanically encased assembly consisting of—

(1) A refrigerated surface (evaporator) that condenses moisture from the atmosphere;

(2) A refrigerating system, including an electric motor;

(3) An air-circulating fan; and

(4) Means for collecting or disposing of the condensate.

Design voltage with respect to an incandescent lamp means:

(1) The voltage marked as the intended operating voltage;

(2) The mid-point of the voltage range if the lamp is marked with a voltage range; or

(3) 120 V if the lamp is not marked with a voltage or voltage range.

Direct vent system means a system supplied by a manufacturer which provides outdoor air or air from an unheated space (such as an attic or crawl space) directly to a furnace or vented heater for combustion and for draft relief if the unit is equipped with a draft control device.

Dishwasher means a cabinet-like appliance which with the aid of water and detergent, washes, rinses, and dries (when a drying process is included) dishware, glassware, eating utensils, and most cooking utensils by chemical, mechanical and/or electrical means and discharges to the plumbing drainage system.

DOE means the Department of Energy.

Electric boiler means an electrically powered furnace designed to supply low pressure steam or hot water for space heating application. A low pressure steam boiler operates at or below 15 pounds per square inch gauge (psig) steam pressure; a hot water boiler operates at or below 160 psig water pressure and 250 °F. water temperature.

Electric central furnace means a furnace designed to supply heat through a system of ducts with air as the heating medium, in which heat is generated by one or more electric resistance heating elements and the heated air is circulated by means of a fan or blower.

Electric clothes dryer means a cabinet-like appliance designed to dry fabrics in a tumble-type drum with forced air circulation. The heat source is electricity and the drum and blower(s) are driven by an electric motor(s).

Electric heater means an electric appliance in which heat is generated from electrical energy and dissipated by convection and radiation and includes baseboard electric heaters, ceiling electric heaters, floor electric heaters, portable electric heaters, and wall electric heaters.

Electric refrigerator means a cabinet designed for the refrigerated storage of food at temperatures above 32° F and below 39° F, configured for general refrigerated food storage, and having a source of refrigeration requiring single phase, alternating current electric energy input only. An electric refrigerator may include a compartment for the freezing and storage of food at temperatures below 32° F, but does not provide a separate low temperature compartment designed for the freezing and storage of food at temperatures below 8 °F.

Electric refrigerator-freezer means a cabinet which consists of two or more compartments with at least one of the compartments designed for the refrigerated storage of food at temperatures above 32 °F. and with at least one of the compartments designed for the freezing and storage of food at temperatures below 8 °F. which may be adjusted by the user to a temperature of 0 °F. or below. The source of refrigeration requires single phase, alternating current electric energy input only.

Electromechanical hydraulic toilet means any water closet that utilizes electrically operated devices, such as, but not limited to, air compressors, pumps, solenoids, motors, or macerators in place of or to aid gravity in evacuating waste from the toilet bowl.

Energy conservation standard means:

(1) A performance standard which prescribes a minimum level of energy

efficiency or a maximum quantity of energy use, or, in the case of showerheads, faucets, water closets, and urinals, water use, for a covered product, determined in accordance with test procedures prescribed under Section 323 of EPCA (42 U.S.C. 6293); or

(2) A design requirement for the products specified in paragraphs (6), (7), (8), (10), (15), (16), (17), and (19) of Section 322(a) of EPCA (42 U.S.C. 6292(a)); and

(3) Includes any other requirements which the Secretary may prescribe under Section 325(r) of EPCA (42 U.S.C. 6295(r)).

ER incandescent reflector lamp means a reflector lamp with an elliptical section below the bulb's major diameter and above its approximate baseline as shown in Figure 1 (RE) on page 7 of ANSI C79.1–1994 (see 10 CFR 430.22) and a finished size and shape shown in ANSI C78.21-1989 including the referenced reflective characteristics in part 7 of ANSI C78.21–1989 (see 10 CFR 430.22).

Estimated annual operating cost means the aggregate retail cost of the energy which is likely to be consumed annually, and in the case of showerheads, faucets, water closets, and urinals, the aggregate retail cost of water and wastewater treatment services likely to be incurred annually, in representative use of a consumer product, determined in accordance with Section 323 of EPCA (42 U.S.C. 6293).

Evaporator coil means a component of a central air conditioner which is designed to absorb heat from an enclosed space and transfer the heat to a refrigerant.

Faucet means a lavatory faucet, kitchen faucet, metering faucet, or replacement aerator for a lavatory or kitchen faucet.

Floor electric heater means an electric heater which is intended to be recessed in a floor, and which transfers by radiation and/or convection (either natural or forced).

Fluorescent lamp means a low pressure mercury electric-discharge source in which a fluorescing coating transforms some of the ultraviolet energy generated by the mercury discharge into light, including only the following:

(1) Any straight-shaped lamp (commonly referred to as 4-foot medium bi-pin lamps) with medium bi-pin bases of nominal overall length of 48 inches and rated wattage of 28 or more.

(2) Any U-shaped lamp (commonly referred to as 2-foot U-shaped lamps) with medium bi-pin bases of nominal overall length between 22 and 25 inches and rated wattage of 28 or more.

(3) Any rapid start lamp (commonly referred to as 8-foot high output lamps) with recessed double contact bases of nominal overall length of 96 inches and 0.800 nominal amperes, as defined in ANSI C78.1–1991.

(4) Any instant start lamp (commonly referred to as 8-foot slimline lamps) with single pin bases of nominal overall length of 96 inches and rated wattage of 52 or more, as defined in ANSI C78.3–1991.

Fluorescent lamp ballast means a device which is used to start and operate fluorescent lamps by providing a starting voltage and current and limiting the current during normal operation.

Flushometer tank means a device whose function is defined in flushometer valve, but integrated within an accumulator vessel affixed and adjacent to the fixture inlet so as to cause an effective enlargement of the supply line immediately before the unit.

Flushometer valve means a valve attached to a pressurized water supply pipe and so designed that when actuated, it opens the line for direct flow into the fixture at a rate and quantity to properly operate the fixture, and then gradually closes to provide trap reseal in the fixture in order to avoid water hammer. The pipe to which this device is connected is in itself of sufficient size, that when open, will allow the device to deliver water at a sufficient rate of flow for flushing purposes.

Forced air central furnace means a gas or oil burning furnace designed to supply heat through a system of ducts with air as the heating medium. The heat generated by combustion of gas or oil is transferred to the air within a casing by conduction through heat exchange surfaces and is circulated through the duct system by means of a fan or blower.

Freezer means a cabinet designed as a unit for the freezing and storage of food at temperatures of 0 °F. or below, and having a source of refrigeration requiring single phase, alternating current electric energy input only.

Furnace means a product which utilizes only single-phase electric current, or single-phase electric current or DC current in conjunction with natural gas, propane, or home heating oil, and which—

(a) Is designed to be the principal heating source for the living space of a residence;

(b) Is not contained within the same cabinet with a central air conditioner whose rated cooling capacity is above 65,000 Btu per hour;

(c) Is an electric central furnace, electric boiler, forced-air central furnace, gravity central furnace, or low pressure steam or hot water boiler; and

(d) Has a heat input rate of less than 300,000 Btu per hour for electric boilers and low pressure steam or hot water boilers and less than 225,000 Btu per hour for forced-air central furnaces, gravity central furnaces, and electric central furnaces, gravity central furnaces, and electric central furnaces.

Gas means either natural gas or propane.

Gas clothes dryer means a cabinet-like appliance designed to dry fabrics in a tumble-type drum with forced air circulation. The heat source is gas and the drum and blower(s) are driven by an electric motor(s).

General Service Fluorescent Lamp means any fluorescent lamp which can be used to satisfy the majority of fluorescent lighting applications, but does not include any lamp designed and marketed for the following nongeneral applications:

(1) Fluorescent lamps designed to promote plant growth.

(2) Fluorescent lamps specifically designed for cold temperature applications.

(3) Colored fluorescent lamps.

(4) Impact-resistant fluorescent lamps.

(5) Reflectorized or aperture lamps.

(6) Fluorescent lamps designed for use in reprographic equipment.

(7) Lamps primarily designed to produce radiation in the ultra-violet region of the spectrum.

(8) Lamps with a Color Rendering Index of 82 or greater.

General Service Incandescent Lamp means any incandescent lamp (other than a miniature or photographic lamp) that has an E26 medium screw base, a rated voltage range at least partially within 115 to 130 volts, and which can be used to satisfy the majority of lighting applications, but does not include any lamps specifically designed for:

(1) Traffic signal, or street lighting service;

(2) Airway, airport, aircraft, or other aviation service;

(3) Marine, or marine signal service;

(4) Photo, projection, sound reproduction, or film viewer service;

(5) Stage, studio, or television service;

(6) Mill, saw mill, or other industrial process service;

(7) Mine service;

(8) Headlight, locomotive, street railway, or other transportation service;

(9) Heating service;

(10) Code beacon, marine signal, lighthouse, reprographic, or other communication service;

(11) Medical or dental service;

(12) Microscope, map, microfilm, or other specialized equipment service;

(13) Swimming pool, or other underwater service;

(14) Decorative or showcase service;

(15) Producing colored light;

(16) Shatter resistance which has an external protective coating; or

(17) Appliance service.

Gravity central furnace means a gas fueled furnace which depends primarily on natural convection for circulation of heated air and which is designed to be used in conjunction with a system of ducts.

Heat pump means a product, other than a packaged terminal heat pump, which consists of one or more assemblies, powered by single phase electric current, rated below 65,000 Btu per hour, utilizing an indoor conditioning coil, compressor, and refrigerant-to-outdoor air heat exchanger to provide air heating, and may also provide air

cooling, dehumidifying, humidifying circulating, and air cleaning.

Home heating equipment, not including furnaces means vented home heating equipment and unvented home heating equipment.

Immersed heating element means an electrically powered heating device which is designed to operate while totally immersed in water in such a manner that the heat generated by the device is imparted directly to the water.

Incandescent lamp means a lamp in which light is produced by a filament heated to incandescence by an electric current, including only the following:

(1) Any lamp (commonly referred to as lower wattage non-reflector general service lamps, including any tungsten halogen lamp) that has a rated wattage between 30 and 199, has an E26 medium screw base, has a rated voltage or voltage range that lies at least partially in the range of 115 and 130 volts, and is not a reflector lamp.

(2) Any incandescent reflector lamp.

(3) Any general service incandescent lamp (commonly referred to as a high- or higher-wattage lamp) that has a rated wattage above 199 (above 205 for a high wattage reflector lamp).

Incandescent reflector lamp (commonly referred to as a reflector lamp) means any lamp in which light is produced by a filament heated to incandescence by an electric current, which: is not colored or designed for rough or vibration service applications that contains an inner reflective coating on the outer bulb to direct the light; has an R, PAR or similar bulb shape (excluding ER or BR) with an E26 medium screw base; has a rated voltage or voltage range that lies at least partially in the range of 115 and 130 volts; has a diameter that exceeds 2.75 inches; and is either a low(er)-wattage reflector lamp that has a rated wattage between 40 and 205; or a high(er)-wattage reflector lamp that has a rated wattage above 205.

Kerosene means No. 1 fuel oil with a viscosity meeting the specifications as specified in UL–730–1974, section 36.9 and in tables 2 and 3 of ANSI Standard Z91.1–1972.

Lamp Efficacy (LE) means the measured lumen output of a lamp in lumens divided by the measured lamp electrical power input in watts expressed in units of lumens per watt (LPW).

Low consumption has the meaning given such a term in ASME A112.19.2M–1995. (see § 430.22)

Low pressure steam or hot water boiler means an electric, gas or oil burning furnace designed to supply low pressure steam or hot water for space heating application. A low pressure steam boiler operates at or below 15 pounds psig steam pressure; a hot water boiler operates at or below 160 psig water pressure and 250 °F. water temperature.

LP-gas means liquified petroleum gas, and includes propane, butane, and propane/butane mixtures.

Major cooking component means either a conventional cooking top, a conventional oven or a microwave oven.

Manufacturer means any person who manufactures a consumer product.

Medium base compact fluorescent lamp means an integrally ballasted fluorescent lamp with a medium screw base, a rated input voltage range of 115 to 130 volts and which is designed as a direct replacement for a general service incandescent lamp; however, the term does not include—

(1) Any lamp that is—

(i) Specifically designed to be used for special purpose applications; and

(ii) Unlikely to be used in general purpose applications, such as the applications described in the definition of ''General Service Incandescent Lamp'' in this section; or

(2) Any lamp not described in the definition of ''General Service Incandescent Lamp'' in this section that is excluded by the Secretary, by rule, because the lamp is—

(i) Designed for special applications; and

(ii) Unlikely to be used in general purpose applications.

Medium screw base means an Edison screw base identified with the prefix E–26 in the ''American National Standard for Electric Lamp Bases'', ANSI_IEC C81.61–2003, published by the American National Standards Institute.

Microwave/conventional range means a class of kitchen ranges and ovens which is a household cooking appliance consisting of a microwave oven, a conventional oven, and a conventional cooking top.

Microwave oven means a class of kitchen ranges and ovens which is a household cooking appliance consisting of a compartment designed to cook or heat food by means of microwave energy.

Mobile home furnace means a direct vent furnace that is designed for use only in mobile homes.

Monochrome television set means an electrical device designed to convert incoming broadcast signals into monochrome television pictures and associated sound.

Natural gas means natural gas as defined by the Federal Power Commission.

Oil means heating oil grade No. 2 as defined in American Society for Testing and Materials (ASTM) D396–71.

Other clothes washer means a class of clothes washer which is not an automatic or semi-automatic clothes washer.

Other cooking products means any class of cooking products other than the conventional range, conventional cooking top, conventional oven, microwave oven, and microwave/conventional range classes.

Outdoor furnace or boiler is a furnace or boiler normally intended for installation out-of-doors or in an unheated space (such as an attic or a crawl space).

Packaged terminal air conditioner means a wall sleeve and a separate unencased combination of heating and cooling assemblies specified by the builder and intended for mounting through the wall. It includes a prime source of refrigeration, separable outdoor louvers, forced ventilation, and heating availability energy.

Packaged terminal heat pump means a packaged terminal air conditioner that utilizes reverse cycle refrigeration as its prime heat source and should have supplementary heating availability by builder's choice of energy.

Person includes any individual, corporation, company, association, firm, partnership, society, trust, joint venture or joint stock company, the government, and any agency of the United States or any State or political subdivision thereof.

Pool heater means an appliance designed for heating nonpotable water contained at atmospheric pressure, including heating water in swimming pools, spas, hot tubs and similar applications.

Portable electric heater means an electric heater which is intended to stand unsupported, and can be moved from place to place within a structure. It is connected to electric supply by means of a cord and plug, and transfers heat by radiation and/or convention (either natural or forced).

Primary heater means a heating device that is the principal source of heat for a structure and includes baseboard electric heaters, ceiling electric heaters, and wall electric heaters.

Propane means a hydrocarbon whose chemical composition is predominantly C_3H_8, whether recovered from natural gas or crude oil.

Rated voltage with respect to incandescent lamps means:

(1) The design voltage if the design voltage is 115 V, 130 V or between 115V and 130 V:

(2) 115 V if the design voltage is less than 115 V and greater than or equal to 100 V and the lamp can operate at 115 V; and

(3) 130 V if the design voltage is greater than 130 V and less than or equal to 150 V and the lamp can operate at 130 V.

Rated wattage, with respect to 4-foot medium bi-pin T8, T10 or T12 lamps, means:

(1) If the lamp is listed in ANSI C78.1–1991, the nominal wattage of a lamp determined by the lamp designation in Annex A.2 of ANSI C78.1–1991; or

(2) If the lamp is a residential straight-shaped lamp, the wattage a lamp consumes when operated on a reference ballast for which the lamp is designed; or

(3) If the lamp is neither listed in ANSI C78.1–1991 nor a residential straight-shaped lamp, the wattage a lamp consumes when using reference ballast characteristics of 236 volts, 0.43 amps and 439 ohms for T10 or T12 lamps or reference ballast characteristics of 300 volts, 0.265 amps and 910 ohms for T8 lamps.

Refrigerator means an electric refrigerator.

Refrigerator-freezer means an electric refrigerator-freezer.

Replacement ballast means a ballast that—

(1) Is designed for use to replace an existing fluorescent lamp ballast in a previously installed luminaire;

(2) Is marked ''FOR REPLACEMENT USE ONLY'';

(3) Is shipped by the manufacturer in packages containing not more than 10 fluorescent lamp ballasts; and

(4) Has output leads that when fully extended are a total length that is less than the length of the lamp with which the ballast is intended to be operated.

Residential straight-shaped lamp means a low pressure mercury electric-discharge source in which a fluorescing coating transforms some of the ultraviolet energy generated by the mercury discharge into light, including a straight-shaped fluorescent lamp with medium bi-pin bases of nominal overall length of 48 inches and is either designed exclusively for residential applications; or designed primarily and marketed exclusively for residential applications.

(1) A lamp is designed exclusively for residential applications if it will not function for more than 100 hours with a commercial high-power-factor ballast.

(2) A lamp is designed primarily and marketed exclusively for residential applications if it:

(i) Is permanently and clearly marked as being for residential use only;

(ii) Has a life of 6,000 hours or less when used with a commercial high-power-factor ballast;

(iii) Is not labeled or represented as a replacement for a fluorescent lamp that is a covered product; and

(iv) Is marketed and distributed in a manner designed to minimize use of the lamp with commercial high-power-factor ballasts.

(3) A manufacturer may market and distribute a lamp in a manner designed to minimize use of the lamp with commercial high-power-factor ballasts by:

(i) Packaging and labeling the lamp in a manner that clearly indicates the lamp is for residential use only and includes appropriate instructions concerning proper and improper use; if the lamp is included in a catalog or price list that also includes commercial/industrial lamps, listing the lamp in a separate residential section accompanied by notes about proper use on the same page; and providing as part of any express warranty accompanying the lamp that improper use voids such warranty; or

(ii) Using other comparably effective measures to minimize use with commercial high-power-factor ballasts.

Room air conditioner means a consumer product, other than a ''packaged terminal air conditioner,'' which is powered by a single phase electric current and which is an encased assembly designed as a unit for mounting in a window or through the wall for the purpose of providing delivery of conditioned air to an enclosed space. It includes a prime source of refrigeration and may include a means for ventilating and heating.

Rough or vibration service incandescent reflector lamp means a reflector lamp: in which a C–11 (5 support), C–17 (8 support), or C–22 (16 support) filament is mounted (the number of support excludes lead wires); in which the filament configuration is as shown in Chapter 6 of the 1993 *Illuminating Engineering Society of North America Lighting Handbook*, 8th Edition (see 10 CFR 430.22); and that is designated and marketed specifically for rough or vibration service applications.

Secretary means the Secretary of the Department of Energy.

Semi-automatic clothes washer means a class of clothes washer that is the same as an automatic clothes washer except that user intervention is required to regulate the water temperature by adjusting the external water faucet valves.

Showerhead means any showerhead (including a hand held showerhead), except a safety shower showerhead.

Small duct, high velocity system means a heating and cooling product that contains a blower and indoor coil combination that:

(1) Is designed for, and produces, at least 1.2 inches of external static pressure when operated at the certified air volume rate of 220–350 CFM per rated ton of cooling; and

(2) When applied in the field, uses high velocity room outlets generally greater than 1000 fpm which have less than 6.0 square inches of free area.

Space constrained product means a central air conditioner or heat pump:

(1) That has rated cooling capacities no greater than 30,000 BTU/hr;

(2) That has an outdoor or indoor unit having at least two overall exterior dimensions or an overall displacement that:

(i) Is substantially smaller than those of other units that are:

(A) Currently usually installed in site-built single family homes; and

(B) Of a similar cooling, and, if a heat pump, heating capacity; and

(ii) If increased, would certainly result in a considerable increase in the usual cost of installation or would certainly result in a significant loss in the utility of the product to the consumer; and

(3) Of a product type that was available for purchase in the United States as of December 1, 2000.

State means a State, the District of Columbia, Puerto Rico, or any territory or possession of the United States.

State regulation means a law or regulation of a State or political subdivision thereof.

Supplementary heater means a heating device that provides heat to a space in addition to that which is supplied by a primary heater. Supplementary heaters include portable electric heaters.

Surface unit means either a heating unit mounted in a cooking top, or a heating source and its associated heated area of the cooking top, on which vessels are placed for the cooking or heating of food.

Television set means a color television set or a monochrome television set.

Through-the-wall air conditioner and heat pump means a central air conditioner or heat pump that is designed to be installed totally or partially within a fixed-size opening in an exterior wall, and:

(1) Is manufactured prior to January 23, 2010;

(2) Is not weatherized;

(3) Is clearly and permanently marked for installation only through an exterior wall;

(4) Has a rated cooling capacity no greater than 30,000 Btu/hr;

(5) Exchanges all of its outdoor air across a single surface of the equipment cabinet; and

(6) Has a combined outdoor air exchange area of less than 800 square inches (split systems) or less than 1,210 square inches (single packaged systems) as measured on the surface described in paragraph (5) of this definition.

Torchiere means a portable electric lamp with a reflector bowl that directs light upward to give indirect illumination.

Unvented gas heater means an unvented, self-contained, free-standing, nonrecessed gas-burning appliance which furnishes warm air by gravity or fan circulation.

Unvented home heating equipment means a class of home heating equipment, not including furnaces, used for the purpose of furnishing heat to a space proximate to such heater directly from the heater and without duct connections and includes electric heaters and unvented gas and oil heaters.

Unvented oil heater means an unvented, self-contained, free-standing, nonrecessed oil-burning appliance which furnishes warm air by gravity or fan circulation.

Urinal means a plumbing fixture which receives only liquid body waste and, on demand, conveys the waste through a trap seal into a gravity drainage system, except such term does not include fixtures designed for installations in prisons.

Vented floor furnace means a self-contained vented heater suspended from the floor of the space being heated, taking air for combustion from outside this space. The vented floor furnace supplies heated air circulated by gravity or by a fan directly into the space to be heated through openings in the casing.

Vented home heating equipment or *vented heater* means a class of home heating equipment, not including furnaces, designed to furnish warmed air to the living space of a residence, directly from the device, without duct connections (except that boots not to exceed 10 inches beyond the casing may be permitted) and includes: vented wall furnace, vented floor furnace, and vented room heater.

Vented room heater means a self-contained, free standing, nonrecessed,

vented heater for furnishing warmed air to the space in which it is installed. The vented room heater supplies heated air circulated by gravity or by a fan directly into the space to be heated through openings in the casing.

Vented wall furnace means a self-contained vented heater complete with grilles or the equivalent, designed for incorporation in, or permanent attachment to, a wall of a residence and furnishing heated air circulated by gravity or by a fan directly into the space to be heated through openings in the casing.

Voltage range means a band of operating voltages as marked on an incandescent lamp, indicating that the lamp is designed to operate at any voltage within the band.

Wall electric heater means an electric heater (excluding baseboard electric heaters) which is intended to be recessed in or surface mounted on walls, which transfers heat by radiation and/or convection (either natural or forced) and which includes forced convectors, natural convectors, radiant heaters, high wall or valance heaters.

Water closet means a plumbing fixture that has a water-containing receptor which receives liquid and solid body waste, and upon actuation, conveys the waste through an exposed integral trap seal into a gravity drainage system, except such term does not include fixtures designed for installation in prisons.

Water heater means a product which utilizes oil, gas, or electricity to heat potable water for use outside the heater upon demand, including—

(a) Storage type units which heat and store water at a thermostatically controlled temperature, including gas storage water heaters with an input of 75,000 Btu per hour or less, oil storage water heaters with an input of 105,000 Btu per hour or less, and electric storage water heaters with an input of 12 kilowatts or less;

(b) Instantaneous type units which heat water but contain no more than one gallon of water per 4,000 Btu per hour of input, including gas instantaneous water heaters with an input of 200,000 Btu per hour or less, oil instantaneous water heaters with an input of 210,000 Btu per hour or less, and electric instantaneous water heaters with an input of 12 kilowatts or less; and

(c) Heat pump type units, with a maximum current rating of 24 amperes at a voltage no greater than 250 volts, which are products designed to transfer thermal energy from one temperature level to a higher temperature level for the purpose of heating water, including all ancillary equipment such as fans, storage tanks, pumps, or controls necessary for the device to perform its function.

Water use means the quantity of water flowing through a showerhead, faucet, water closet, or urinal at point of use, determined in accordance with test procedures under Appendices S and T of subpart B of this part.

Weatherized warm air furnace or boiler means a furnace or boiler designed for installation outdoors, approved for resistance to wind, rain, and snow, and supplied with its own venting system.

[42 FR 27898, June 1, 1977]

EDITORIAL NOTE: For FEDERAL REGISTER citations affecting § 430.2, see the List of CFR Sections Affected, which appears in the Finding Aids section of the printed volume and on GPO Access.

Subpart B—Test Procedures

§ 430.21 Purpose and scope.

This subpart contains test procedures required to be prescribed by DOE pursuant to section 323 of the Act.

§ 430.22 Reference Sources.

(a) *Materials incorporated by reference.*—(1) *General.* The following standards which are not otherwise set forth in Part 430 are incorporated by reference and made a part of Part 430. The standards listed in this section have been approved for incorporation by reference by the Director of the Federal Register in accordance with 5 U.S.C. 552(a) and 1 CFR Part 51. The specified versions of the standards are incorporated, and any subsequent amendment to a standard by the standard-setting organization will not affect the DOE test procedures unless and until those test procedures are amended by DOE.

(2) *Availability of standards.* The standards incorporated by reference are available for inspection at:

(i) National Archives and Records Administration (NARA). For information on the availability of this material at NARA, call 202–741–6030, or go to: *http://www.archives.gov/federal_register/code_of_federal_regulations/ibr_locations.html.*

(ii) U.S. Department of Energy, Office of Energy Efficiency and Renewable Energy, Hearings and Dockets, Forrestal Building, 1000 Independence Ave, SW, Washington, DC 20585.

(b) (1) American National Standards Institute (ANSI). The ANSI standards listed in this paragraph may be obtained from the American National Standards Institute, 25 W. 43rd Street, 4th Floor, New York, NY 10036, (212) 642–4900.

1. ANSI C78.1–1991, ''for Fluorescent Lamps—Rapid-Start Types—Dimensional and Electrical Characteristics''
2. ANSI C78.2–1991, ''for Fluorescent Lamps—Preheat-Start Types—Dimensional and Electrical Characteristics of Fluorescent Lamps''
3. ANSI C78.3–1991, ''for Fluorescent Lamps—Instant-Start and Cold-Cathode Types—Dimensional and Electrical Characteristics''
4. ANSI C78.375–1991, ''for Fluorescent Lamps—Guide for Electrical Measurements''
5. ANSI C82.3–1983 ''for Reference Ballasts for Fluorescent Lamps''
6. ANSI C79.1–1994, ''Nomenclature for Glass Bulbs—Intended for Use with Electric Lamps''
7. ANSI C78.21–1989, ''Incandescent Lamps—PAR and R Shapes''

(2) Illuminating Engineering Society of North America (IESNA). The IESNA standards listed in this paragraph may be obtained from the Illuminating Engineering Society of North America, 120 Wall Street, Floor 17, New York, NY 10005–4001, (212) 248–5000.

1. Illuminating Engineering Society LM–9–88, ''IES Approved Method for the Electrical and Photometric Measurements of Fluorescent Lamps''
2. Illuminating Engineering Society of North America LM–16–1993, ''IESNA Practical Guide to Colorimetry of Light Sources''
3. Illuminating Engineering Society of North America LM–20–1994, ''IESNA Approved Method for Photometric Testing of Reflector-Type Lamps''
4. Illuminating Engineering Society of North America LM–45–91, ''IES Approved Method for Electrical and Photometric Measurements of General Service Incandescent Filament Lamps''
5. Illuminating Engineering Society of North America LM–58–1994, ''IESNA Guide to Spectroradiometric Measurements''
6. Illuminating Engineering Society of North America LM–66–1991, ''IES Approved Method for the Electrical and Photometric Measurements of Single-Ended Compact Fluorescent Lamps''
7. *Illuminating Engineering Society of North America Lighting Handbook, Reference and Application*, 8th Edition, 1993, Chapter 6, Light Sources

(3) International Commission on Illumination (CIE). The CIE standards listed in this paragraph may be obtained from the International Commission on Illumination, CIE Bureau Central, Kegelgasse 27, A–1030, Vienna, Austria. CIE publications are also available from TLA Lighting Consultants, 7 Pond Street, Salem, MA 10970, (508) 745–6870.

1. International Commission on Illumination (CIE) Publication No. 13.2 1974, corrected reprint 1993, ''Method of Measuring and Specifying Color Rendering Properties of Light Sources,'' ISBN 3 900 734 39 9

(4) International Electrotechnical Commission. Copies of the International Electrotechnical Commission Publications can be obtained from the American National Standards Institute, 11 West 42nd Street, New York, New York 10036, (212) 642–4936.

1. IEC 705, ''Methods for Measuring the Performance of Microwave Ovens for Household and Similar Purposes,'' Section 4, Methods of Measurement, Paragraph 13 ''Electrical Power Input Measurement,'' and Paragraph 14 ''Efficiency'' (1988).
2. IEC 705, Amendment 2, ''Methods for Measuring the Performance of Microwave Ovens for Household and Similar Purposes,'' Section 4, Methods of Measurement, Paragraph 12 ''Microwave Power Output Measurement'' (1993).

(5) American Society of Heating, Refrigerating and Air-Conditioning Engineers, Inc., Publication Sales, 1791 Tullie Circle, NE, Atlanta, GA 30329, (1–800–5–ASHRAE).

1. American National Standards Institute/American Society of Heating, Refrigerating, and Air-Conditioning Engineers Standard 103–1993, ''Methods of Testing for

Annual Fuel Utilization Efficiency of Residential Central Furnaces and Boilers,'' (with Errata of October 24, 1996) except for sections 3.0, 7.2.2.5, 8.6.1.1, 9.1.2.2, 9.5.1.1, 9.5.1.2.1, 9.5.1.2.2, 9.5.2.1, 9.7.1, 10.0, 11.2.12, 11.3.12, 11.4.12, 11.5.12 and appendices B and C.

2. American National Standards Institute Standard Z21.56–1994, ''Gas-Fired Pool Heaters,'' section 2.9.

(6) American Society of Mechanical Engineers (ASME). The ASME standards listed in this paragraph may be obtained from the American Society of Mechanical Engineers, Service Center, 22 Law Drive, P.O. Box 2900, Fairfield, NJ 07007.

1. ASME/ANSI Standard A112.18.1M–1996, ''Plumbing Fixture Fittings.''
2. ASME/ANSI Standard A112.19.6–1995, ''Hydraulic Requirements for Water Closets and Urinals.''

(7) Association of Home Appliance Manufacturers, 1111 19th Street, NW., Suite 402, Washington, DC 20036, (202) 872–5955, ''American National Standard, Household Electric Dishwashers, ANSI/AHAM DW–1–1992,'' hereinafter referred to as ANSI/AHAM DW–1.

(c) *Reference Standards*—(1) *General.* The standards listed in this paragraph are referred to in the DOE test procedures and elsewhere in 10 CFR part 430 but are not incorporated by reference. These sources are given here for information and guidance.

(2) *List of References.*

1. National Voluntary Laboratory Accreditation Program Handbook 150–01, ''Energy Efficient Lighting Products, Lamps and Luminaires, August 1993.'' National Voluntary Laboratory Accreditation Program, NIST, Gaithersburg, MD.
2. ''Illuminating Engineering Society Lighting Handbook,'' 8th Edition, New York, NY 1993.

[59 FR 49474, Sept. 28, 1994, as amended at 62 FR 29239, May 29, 1997; 62 FR 51981, Oct. 3, 1997; 63 FR 13316, Mar. 18, 1998; 66 FR 65095, Dec. 18, 2001; 68 FR 51899, Aug. 29, 2003; 69 FR 18803. Apr. 9, 2004]

EFFECTIVE DATE NOTE: At 70 FR 59134, Oct. 11, 2005, § 430.22 was amended by adding paragraph (b)(1)8 in paragraph (b)(1), by removing paragraph (b)(5)2., and adding new paragraphs (b)(5)2. through (b)(5)9 in paragraph (b)(5), and by adding paragraph (b)(8), effective Apr. 10, 2006. For the convenience of the user the added text follows:

§ 430.22 Reference Sources.

* * * * *

(b) * * *

(1) * * *

8. ANSI Standard Z21.56–1994, ''Gas-Fired Pool Heaters,'' section 2.9.

* * * * *

(5) * * *

2. American Society of Heating, Refrigerating, and Air-Conditioning Engineers Standard 23–1993, ''Methods of Testing for Rating Positive Displacement Refrigerant Compressors and Condensing Units.''
3. American Society of Heating, Refrigerating, and Air-Conditioning Engineers Standard 37–1988, ''Methods of Testing for Rating Unitary Air-Conditioning and Heat Pump Equipment.''
4. American Society of Heating, Refrigerating, and Air-Conditioning Engineers Standard 41.1–1986 (Reaffirmed 2001), ''Standard Method for Temperature Measurement.''
5. American Society of Heating, Refrigerating, and Air-Conditioning Engineers Standard 41.2–1987 (Reaffirmed 1992), ''Standard Methods for Laboratory Airflow Measurement.''
6. American Society of Heating, Refrigerating, and Air-Conditioning Engineers Standard 41.6–1994 (Reaffirmed 2001), ''Standard Method for Measurement of Moist Air Properties.''
7. American Society of Heating, Refrigerating, and Air-Conditioning Engineers Standard 41.9–2000, ''Calorimeter Test Methods for Mass Flow Measurements of Volatile Refrigerants.''
8. American Society of Heating, Refrigerating, and Air-Conditioning Engineers Standard 116–1995, ''Methods of Testing for Rating for Seasonal Efficiency of Unitary Air Conditioners and Heat Pumps.''
9. American Society of Heating, Refrigerating, and Air-Conditioning Engineers/Air Movement and Control Association International, Inc. Standard 51–1999/210–1999, ''Laboratory Methods of Testing Fans for Aerodynamic Performance Rating.''

* * * * *

(8) Air-Conditioning and Refrigeration Institute (ARI), 4100 North Fairfax Drive, Suite 200, Arlington, Virginia 22203–1629, (703) 524–8800, ARI Standard 210/240–2003, ''Unitary Air-Conditioning and Air-Source Heat Pump Equipment.''

* * * * *

§ 430.23 Test procedures for the measurement of energy and water consumption.

(a) *Refrigerators and refrigerator-freezers.* (1) The estimated annual operating cost for electric refrigerators and electric refrigerator-freezers without an anti-sweat heater switch shall be the product of the following three factors: (i) The representative average-use cycle of 365 cycles per year, (ii) the average per-cycle energy consumption for the standard cycle in kilowatt-hours per cycle, determined according to 6.2 (6.3.6 for externally vented units) of appendix A1 of this subpart, and (iii) the representative average unit cost of electricity in dollars per kilowatt-hour as provided by the Secretary, the resulting product then being rounded off to the nearest dollar per year.

(2) The estimated annual operating cost for electric refrigerators and electric refrigerator-freezers with an anti-sweat heater switch shall be the product of the following three factors: (i) The representative average-use cycle of 365 cycles per year, (ii) half the sum of the average per-cycle energy consumption for the standard cycle and the average per-cycle energy consumption for a test cycle type with the anti-sweat heater switch in the position set at the factory just prior to shipping, each in kilowatt-hours per cycle, determined according to 6.2 (6.3.6 for externally vented units) of appendix A1 of this subpart, and (iii) the representative average unit cost of electricity in dollars per kilowatt-hour as provided by the Secretary, the resulting product then being rounded off to the nearest dollar per year.

(3) The estimated annual operating cost for any other specified cycle type for electric refrigerators and electric refrigerator-freezers shall be the product of the following three factors: (i) The representative average-use cycle of 365 cycles per year, (ii) the average per-cycle energy consumption for the specified cycle type, determined according to 6.2 (6.3.6 for externally vented units) of appendix A1 to this subpart, and (iii) the representative average unit cost of electricity in dollars per kilowatt-hour as provided by the Secretary, the resulting product then being rounded off to the nearest dollar per year.

(4) The energy factor for electric refrigerators and electric refrigerator-freezers, expressed in cubic feet per kilowatt-hour per cycle, shall be—

(i) For electric refrigerators and electric refrigerator-freezers not having an anti-sweat heater switch, the quotient of (A) the adjusted total volume in cubic feet, determined according to 6.1 of appendix A1 of this subpart, divided by (B) the average per-cycle energy consumption for the standard cycle in kilowatt-hours per cycle, determined according to 6.2 (6.3.6 for externally vented units) of appendix A1 of this subpart, the resulting quotient then being rounded off to the second decimal place, and

(ii) For electric refrigerators and electric refrigerator-freezers having an anti-sweat heater switch, the quotient of (A) the adjusted total volume in cubic feet, determined according to 6.1 of appendix A1 of this subpart, divided by (B) half the sum of the average per-cycle energy consumption for the standard cycle and the average per-cycle energy consumption for a test cycle type with the anti-sweat heater switch in the position set at the factory just prior to shipping, each in kilowatt-hours per cycle, determined according to 6.2 (6.3.6 for externally vented units) of appendix A1 of this subpart, the resulting quotient then being rounded off to the second decimal place.

(5) The annual energy use of electric refrigerators and electric refrigerator-freezers equals the representative average use cycle of 365 cycles per year times the average per-cycle energy consumption for the standard cycle in kilowatt-hours per cycle, determined according to 6.2 (6.3.6 for externally vented units) of appendix A1 of this subpart.

(6) Other useful measures of energy consumption for electric refrigerators and electric refrigerator-freezers shall be those measures of energy consumption for electric refrigerators and electric refrigerator-freezers which the Secretary determines are likely to assist consumers in making purchasing decisions which are derived from the application of appendix A1 of this subpart.

(7) The estimated regional annual operating cost for externally vented electric refrigerators and externally vented electric refrigerator-freezers without an anti-sweat heater switch shall be the product of the following three factors:

(i) The representative average-use cycle of 365 cycles per year,

(ii) The regional average per-cycle energy consumption for the standard cycle in kilowatt-hours per cycle, determined according to 6.3.7 of appendix A1 of this subpart and

(iii) The representative average unit cost of electricity in dollars per kilowatt-hour as provided by the Secretary, the resulting product then being rounded off to the nearest dollar per year.

(8) The estimated regional annual operating cost for externally vented electric refrigerators and externally vented electric refrigerator-freezers with an anti-sweat heater switch shall be the product of the following three factors:

(i) The representative average-use cycle of 365 cycles per year,

(ii) Half the sum of the average per-cycle energy consumption for the standard cycle and the regional average per-cycle energy consumption for a test cycle with the anti-sweat heater switch in the position set at the factory just prior to shipping, each in kilowatt-hours per cycle, determined according to 6.3.7 of appendix A1 of this subpart, and

(iii) The representative average unit cost of electricity in dollars per kilowatt-hour as provided by the Secretary, the resulting product then being rounded off to the nearest dollar per year.

(9) The estimated regional annual operating cost for any other specified cycle for externally vented electric refrigerators and externally vented electric refrigerator-freezers shall be the product of the following three factors:

(i) The representative average-use cycle of 365 cycles per year,

(ii) The regional average per-cycle energy consumption for the specified cycle, in kilowatt-hours per cycle, determined according to 6.3.7 of appendix A1 of this subpart, and

(iii) The representative average unit cost of electricity in dollars per kilowatt-hour as provided by the Secretary, the resulting product then being rounded off to the nearest dollar per year.

(b) *Freezers.* (1) The estimated annual operating cost for freezers without an anti-sweat heater switch shall be the product of the following three factors: (i) The representative average-use cycle of 365 cycles per year, (ii) the average per-cycle energy consumption for the standard cycle in kilowatt-hours per cycle, determined according to 6.2 of appendix B1 of this subpart, and (iii) the representative average unit cost of electricity in dollars per kilowatt-hour as provided by the Secretary, the resulting product then being rounded off to the nearest dollar per year.

(2) The estimated annual operating cost for freezers with an anti-sweat heater switch shall be the product of the following three factors: (i) The representative average-use cycle of 365 cycles per year, (ii) half the sum of the average per-cycle energy consumption for the standard cycle and the average per-cycle energy consumption for a test cycle type with the anti-sweat heater switch in the position set at the factory just prior to shipping, each in kilowatt-hours per cycle, determined according to 6.2 of appendix B1 of this subpart, and (iii) the representative average unit cost of electricity in dollars per kilowatt-hour as provided by the Secretary, the resulting product then being rounded off to the nearest dollar per year.

(3) The estimated annual operating cost for an other specified cycle type for freezers shall be the product of the following three factors: (i) The representative average-use cycle of 365 cycles per year, (ii) the average per-cycle energy consumption for the specified cycle type, determined according to 6.2 of appendix B1 of this subpart and (iii) the representative average unit cost of electricity in dollars per kilowatt-hour as provided by the Secretary, the resulting product then being rounded off to the nearest dollar per year.

(4) The energy factor for freezers, expressed in cubic feet per kilowatt-hour per cycle, shall be—

(i) For freezers not having an anti-sweat heater switch, the quotient of

(A) the adjusted net refrigerated volume in cubic feet, determined according to 6.1 of appendix B1 of this subpart, divided by (B) the average per-cycle energy consumption for the standard cycle in kilowatt-hours per cycle, determined according to or 6.2 of appendix B1 of this subpart, the resulting quotient then being rounded off to the second decimal place, and

(ii) For freezers having an anti-sweat heater switch, the quotient of (A) the adjusted net refrigerated volume in cubic feet, determined according to 6.1 of appendix B1 of this subpart, divided by (B) half the sum of the average per-cycle energy consumption for the standard cycle and the average per-cycle energy consumption for a test cycle type with the anti-sweat switch in the position set at the factory just prior to shipping, each in kilowatt-hours per cycle, determined according to or 6.2 of appendix B1 of this subpart, the resulting quotient then being rounded off to the second decimal place.

(5) The annual energy use of all freezers equals the representative average-use cycle of 365 cycles per year times the average per-cycle energy consumption for the standard cycle in kilowatt-hours per cycle, determined according to 6.2 of appendix B1 of this subpart.

(6) Other useful measures of energy consumption for freezers shall be those measures of energy consumption for freezers which the Secretary determines are likely to assist consumers in making purchasing decisions and which are derived from the application of appendix B1 of this subpart.

(c) *Dishwashers.* (1) The Estimated Annual Operating Cost (EAOC) for dishwashers must be rounded to the nearest dollar per year and is defined as follows:

(i) When cold water (50 °F) is used,

(A) For dishwashers having a truncated normal cycle as defined in section 1.15 of appendix C to this subpart,

$$EAOC = (D_e \times S) + (D_e \times N \times (M - (E_D/2))).$$

(B) For dishwashers not having a truncated normal cycle,

$$EAOC = (D_e \times S) + (D_e \times N \times M)$$

Where,

D_e = the representative average unit cost of electrical energy, in dollars per kilowatt-hour, as provided by the Secretary,

S = the annual standby electrical energy in kilowatt-hours per year and determined according to section 5.6 of Appendix C to this subpart,

N = the representative average dishwasher use of 215 cycles per year,

M = the machine electrical energy consumption per-cycle for the normal cycle as defined in section 1.6 of Appendix C to this subpart, in kilowatt-hours and determined according to section 5.1 of Appendix C to this subpart,

E_D = the drying energy consumption defined as energy consumed using the power-dry feature after the termination of the last rinse option of the normal cycle and determined according to section 5.2 of appendix C to this subpart.

(ii) When electrically-heated water (120 °F or 140 °F) is used,

(A) For dishwashers having a truncated normal cycle as defined in section 1.15 of appendix C to this subpart,

$$EAOC = (D_e \times S) + (D_e \times N \times (M - (E_D/2))) + (D_e \times N \times W)$$

(B) For dishwashers not having a truncated normal cycle,

$$EAOC = (D_e \times S) + (D_e \times N \times M) + (D_e \times N \times W)$$

Where,

D_e, S, N, M, and E_D, are defined in paragraph (c)(1)(i) of this section, and

W = the total water energy consumption per cycle for the normal cycle as defined in section 1.6 of Appendix C to this subpart, in kilowatt-hours per cycle and determined according to section 5.4 of Appendix C to this subpart.

(iii) When gas-heated or oil-heated water is used,

(A) For dishwashers having a truncated normal cycle as defined in section 1.15 of appendix C to this subpart,

$$EAOC_g = (D_e \times S) + (D_e \times N \times (M - (E_D/2))) + (D_g \times N \times W_g)$$

(B) For dishwashers not having a truncated normal cycle,

(B) For dishwashers not having a truncated normal cycle,

$$EAOC_g = (D_e \times S) + (D_e \times N \times M) + (D_g \times N \times W_g)$$

Where,

D_e, S, N, M, and E_D are defined in paragraph (c)(1)(i) of this section,

D_g = the representative average unit cost of gas or oil, as appropriate, in dollars per Btu, as provided by the Secretary, and

W_g = the total water energy consumption per cycle for the normal cycle as defined in section 1.6 of appendix C to this subpart, in Btu's per cycle and determined according to section 5.5 of appendix C to this subpart.

(2) The energy factor for dishwashers, EF, expressed in cycles per kilowatt-hour is defined as follows:

(i) When cold water (50 °F) is used,

(A) For dishwashers having a truncated normal cycle as defined in section 1.15 of appendix C to this subpart,

$$EF = 1/(M-(E_D/2))$$

(B) For dishwashers not having a truncated normal cycle,

$$EF = 1/M$$

Where,

M, and E_D are defined in paragraph (c)(1)(i) of this section.

(ii) When electrically-heated water (120 °F or 140 °F) is used,

(A) For dishwashers having a truncated normal cycle as defined in section 1.15 of appendix C to this subpart,

$$EF = 1/(M-(E_D/2)+W)$$

(B) For dishwashers not having a truncated normal cycle,

$$EF = 1/(M+W)$$

Where,

M, and E_D are defined in paragraph (c)(1)(i) of this section, and W is defined in paragraph (c)(1)(ii)of this section.

(3) The estimated annual energy use, EAEU, expressed in kilowatt-hours per year is defined as follows:

(i) For dishwashers having a truncated normal cycle as defined in section 1.15 of appendix C to this subpart,

$$EAEU = (M-(E_D/2)+W)\times N+S$$

Where,

M, E_D, N and S are defined in paragraph (c)(1)(i) of this section, and W is defined in paragraph (c)(1)(ii) of this section.

(ii) For dishwashers not having a truncated normal cycle,

$$EAEU = (M+W)\times N+S$$

Where,

M, N and S are defined in paragraph (c)(1)(i) of this section, and W is defined in paragraph (c)(1)(ii) of this section.

(4) Other useful measures of energy consumption for dishwashers are those which the Secretary determines are likely to assist consumers in making purchasing decisions and which are derived from the application of appendix C to this subpart.

(d) *Clothes dryers.* (1) The estimated annual operating cost for clothes dryers shall be—

(i) For an electric clothes dryer, the product of the following three factors: (A) The representative average-use cycle of 416 cycles per year, (B) the total per-cycle energy consumption in kilowatt-hours per-cycle, determined according to 4.1 of appendix D to this subpart, and (C) the representative average unit cost in dollars per kilowatt-hour as provided by the Secretary, the resulting product then being rounded off to the nearest dollar per year, and

(ii) For a gas clothes dryer, the product of the representative average-use cycle of 416 cycles per year times the sum of (A) the product of the gas dryer electric per-cycle energy consumption in kilowatt-hours per cycle, determined according to 4.2 of appendix D to this subpart, times the representative average unit cost in dollars per kilowatt-hour as provided by the Secretary plus (B) the product of the total gas dryer gas energy consumption per cycle, in Btu's per cycle, determined according to 4.5 of appendix D of this subpart, times the representative average unit cost in dollars per Btu as provided by the Secretary, the resulting product then being rounded off to the nearest dollar per year.

(2) The energy factor, expressed in pounds of clothes per kilowatt-hour, for clothes dryers shall be either the quotient of a 3-pound bone-dry test load for compact dryers, as defined by 2.6.1 of appendix D to this subpart or the quotient of a 7 pound bone-dry test load for standard dryers, as defined by 2.6.2 of appendix D to this subpart, as applicable, divided by the clothes dryer energy consumption per cycle, as determined according to 4.1 for electric clothes dryers and 4.6 for gas clothes dryers of appendix D to this subpart, the resulting quotient then being rounded off to the nearest hundredth (.01).

(3) Other useful measures of energy consumption for clothes dryers shall be those measures of energy consumption for clothes dryers which the Secretary

determines are likely to assist consumers in making purchasing decisions and which are derived from the application of appendix D to this subpart.

(e) *Water Heaters.* (1) The estimated annual operating cost for water heaters shall be—

(i) For a gas or oil water heater, the product of the annual energy consumption, determined according to section 6.1.8 or 6.2.5 of appendix E of this subpart, times the representative average unit cost of gas or oil, as appropriate, in dollars per Btu as provided by the Secretary, the resulting product then being rounded off to the nearest dollar per year.

(ii) For an electric water heater, the product of the annual energy consumption, determined according to section 6.1.8 or 6.2.5 of appendix E of this subpart, times the representative average unit cost of electricity in dollars per kilowatt-hour as provided by the Secretary, divided by 3412 Btu per kilowatt-hour, the resulting quotient then being rounded off to the nearest dollar per year.

(2) The energy factor for the water heaters shall be—

(i) For a gas or oil water heater, as determined by section 6.1.7 or 6.2.4 of appendix E of this subpart rounded off to the nearest 0.01.

(ii) For an electric water heater, as determined by section 6.1.7 or 6.2.4 of appendix E of this subpart rounded off to the nearest 0.01.

(3) Other useful measures of energy consumption for water heaters shall be those measures of energy consumption for water heaters which the Secretary determines are likely to assist consumers in making purchasing decisions and which are derived from the application of appendix E of this subpart.

(4) The alternative uniform test method for measuring the energy consumption of untested water heaters shall be that set forth in section 7.0 of appendix E of this subpart.

(f) *Room air conditioners.* (1) The estimated annual operating cost for room air conditioners, expressed in dollars per year, shall be determined by multiplying the following three factors: (i) Electrical input power in kilowatts as determined in accordance with 4.2 of appendix F to this subpart, (ii) The representative average-use cycle of 750 hours of compressor operation per year, and (iii) A representative average unit cost of electrical energy in dollars per kilowatt-hour as provided by the Secretary, the resulting product then being rounded off to the nearest dollar per year.

(2) The energy efficiency ratio for room air conditioners, expressed in Btu's per watt-hour, shall be the quotient of: (i) The cooling capacity in Btu's per hour as determined in accordance with 4.1 of appendix F to this subpart divided by: (ii) The electrical input power in watts as determined in accordance with 4.2 of appendix F to this subpart the resulting quotient then being rounded off to the nearest 0.1 Btu per watt-hour.

(3) The average annual energy consumption for room air conditioners, expressed in kilowatt-hours per year, shall be determined by multiplying together the following two factors: (i) Electrical input power in kilowatts as determined in accordance with 4.2 of appendix F to this subpart, and (ii) A representative average use cycle of 750 hours of compressor operation per year, the resulting product then being rounded off to the nearest kilowatt-hour per year.

(4) Other useful measures of energy consumption for room air conditioners shall be those measures of energy consumption which the Secretary determines are likely to assist consumers in making purchasing decisions and which are derived from the application of appendix F to this subpart.

(g) *Unvented home heating equipment.* (1) The estimated annual operating cost for primary electric heaters, shall be the product of: (i) The average annual electric energy consumption in kilowatt-hours per year, determined according to section 3.1 of appendix G of this subpart and (ii) the representative average unit cost in dollars per kilowatt-hour as provided pursuant to section 323(b)(2) of the Act, the resulting product then being rounded off to the nearest dollar per year.

(2) The estimated regional annual operating cost for primary electric heaters, shall be the product of: (i) The regional annual electric energy consumption in kilowatt-hours per year for primary heaters determined according to section 3.2 of appendix G of this subpart and (ii) the representative average unit cost in dollars per kilowatt-hour as provided pursuant to section 323(b)(2) of the Act, the resulting product then being rounded off to the nearest dollar per year.

(3) The estimated operating cost per million Btu output shall be—

(i) For primary and supplementary electric heaters and unvented gas and oil heaters without an auxiliary electric system, the product of: (A) One million; and (B) the representative unit cost in dollars per Btu for natural gas, propane, or oil, as provided pursuant to section 323(b)(2) of the Act as appropriate, or the quotient of the representative unit cost in dollars per kilowatt-hour, as provided pursuant to section 323(b)(2) of the Act, divided by 3,412 Btu per kilowatt hour, the resulting product then being rounded off to the nearest 0.01 dollar per million Btu output; and

(ii) For unvented gas and oil heaters with an auxiliary electric system, the product of: (A) The quotient of one million divided by the rated output in Btu's per hour as determined in 3.4 of appendix G of this subpart; and (B) the sum of: (*1*) The product of the maximum fuel input in Btu's per hour as determined in 2.2. of this appendix times the representative unit cost in dollars per Btu for natural gas, propane, or oil, as appropriate, as provided pursuant to section 323(b)(2) of the Act, plus (*2*) the product of the maximum auxiliary electric power in kilowatts as determined in 2.1 of appendix G of this subpart times the representative unit cost in dollars per kilowatt-hour as provided pursuant to section 323(b)(2) of the Act, the resulting quantity shall be rounded off to the nearest 0.01 dollar per million Btu output.

(4) The rated output for unvented heaters is the rated output as determined according to either sections 3.3 or 3.4 of appendix G of this subpart, as appropriate, with the result being rounded to the nearest 100 Btu per hour.

(5) Other useful measures of energy consumption for unvented home heating equipment shall be those measures of energy consumption for unvented home heating equipment which the Secretary determines are likely to assist consumers in making purchasing decisions and which are derived from the application of appendix G of this subpart.

(h) *Television sets.* (1) The estimated average annual operating cost for television sets shall be the product of:

(i) The average annual energy consumed by the television set in kilowatt-hours per year, determined according to 3.0 of appendix H of this subpart, and

(ii) The representative average unit cost of energy in dollars per kilowatt-hour as provided by the Secretary, the resulting product then being rounded off to the nearest dollar per year.

(2) The receiver energy efficiency factor for television sets shall be:

(i) For color television sets, the product of the estimated minimum power requirement (.130 kilowatts) and the average annual hours of use (2,200 hr/yr.), divided by the average annual energy consumed by the television set in kilowatt-hours per year, determined according to 3.0 of appendix H to this subpart. The resultant is then multiplied by 100 and expressed as a percent.

(ii) For monochrome television sets, the product of the estimated minimum power requirement (.040 kilowatts) and the average annual hours of use (2,200 hr/yr.), divided by the average annual energy consumed by the television set in kilowatt-hours per year determined according to 3.0 of appendix H of this subpart. The result is then multiplied by 100 and expressed as a percent.

(3) Other useful measures of energy consumption for television sets shall be those measures of energy consumption for television sets which the Secretary determines are likely to assist consumers in making purchasing decisions and which are derived from the application of appendix H of this subpart.

(i) *Kitchen ranges and ovens.* (1) The estimated annual operating cost for conventional ranges, conventional cooking tops, conventional ovens,

microwave ovens, and microwave/conventional ranges shall be the sum of the following products: (i) The total annual electrical energy consumption for any electrical energy usage, in kilowatt-hours (kWh's) per year, times the representative average unit cost for electricity, in dollars per kWh, as provided pursuant to section 323(b)(2) of the Act; plus (ii) the total annual gas energy consumption for any natural gas usage, in British thermal units (Btu's) per year, times the representative average unit cost for natural gas, in dollars per Btu, as provided pursuant to section 323(b)(2) of the Act; plus (iii) the total annual gas energy consumption for any propane usage, in Btu's per year, times the representative average unit cost for propane, in dollars per Btu, as provided pursuant to section 323(b)(2) of the Act. The total annual energy consumption for conventional ranges, conventional cooking tops, conventional ovens, microwave ovens, and microwave/conventional ranges shall be as determined according to 4.3, 4.2.2, 4.1.2, and 4.4.3, respectively, of appendix I to this subpart. The estimated annual operating cost shall be rounded off to the nearest dollar per year, except for microwave ovens, for which the estimated annual operating cost shall be rounded off to the nearest one-quarter of a dollar per year.

(2) The cooking efficiency for conventional cooking tops, conventional ovens, and microwave ovens shall be the ratio of the cooking energy output for the test to the cooking energy input for the test, as determined according to 4.2.1, 4.1.3, and 4.4.4, respectively, of appendix I to this subpart. The final cooking efficiency values shall be rounded off to three significant digits.

(3) [Reserved]

(4) The energy factor for conventional ranges, conventional cooking tops, conventional ovens, microwave ovens, and microwave/conventional ranges shall be the ratio of the annual useful cooking energy output to the total annual energy input, as determined according to 4.3, 4.2.3, 4.1.4, 4.4.5, respectively, of Appendix I to this subpart. The final energy factor values shall be rounded off to three significant digits.

(5) There shall be two estimated annual operating costs, two cooking efficiencies, and two energy factors for convertible cooking appliances—(i) an estimated annual operating cost, a cooking efficiency and an energy factor which represent values for those three measures of energy consumption for the operation of the appliance with natural gas; and (ii) an estimated annual operating cost, a cooking efficiency and an energy factor which represent values for those three measures of energy consumption for the operation of the appliance with LP-gas.

(6) The estimated annual operating cost for convertible cooking appliances which represents natural gas usage, as described in paragraph (i)(5)(i) of this section, shall be determined according to paragraph (i)(1) of this section using the total annual gas energy consumption for natural gas times the representative average unit cost for natural gas.

(7) The estimated annual operating cost for convertible cooking appliances which represents LP-gas usage, as described in paragraph (i)(5)(ii) of this section, shall be determined according to paragraph (i)(1) of this section using the representative average unit cost for propane times the total annual energy consumption of the test gas, either propane or natural gas.

(8) The cooking efficiency for convertible cooking appliances which represents natural gas usage, as described in paragraph (i)(5)(i) of this section, shall be determined according to paragraph (i)(2) of this section when the appliance is tested with natural gas.

(9) The cooking efficiency for convertible cooking appliances which represents LP-gas usage, as described in paragraph (i)(5)(ii) of this section, shall be determined according to paragraph (i)(2) of this section, when the appliance is tested with either natural gas or propane.

(10) The energy factor for convertible cooking appliances which represents natural gas usage, as described in paragraph (i)(5)(i) of this section, shall be determined according to paragraph (i)(4) of this section when the appliance is tested with natural gas.

(11) The energy factor for convertible cooking appliances which represents LP-gas usage, as described in paragraph (i)(5)(ii) of this section, shall be determined according to paragraph (i)(4) of this section when the appliance is tested with either natural gas or propane.

(12) Other useful measures of energy consumption for conventional ranges, conventional cooking tops, conventional ovens, microwave ovens and microwave/conventional ranges shall be those measures of energy consumption which the Secretary determines are likely to assist consumers in making purchasing decisions and which are derived from the application of appendix I to this subpart.

(j) *Clothes washers.* (1) The estimated annual operating cost for automatic and semi-automatic clothes washers shall be—

(i) When electrically heated water is used, the product of the following three factors:

(A) The representative average-use of 392 cycles per year,

(B) The total per-cycle energy consumption in kilowatt-hours per cycle determined according to 4.1.6 of appendix J before appendix J1 becomes mandatory and 4.1.7 of appendix J1 when appendix J1 becomes mandatory, (see the note at the beginning of appendix J1), and

(C) The representative average unit cost in dollars per kilowatt-hour as provided by the Secretary, the resulting product then being rounded off to the nearest dollar per year, and

(ii) When gas-heated or oil-heated water is used, the product of: the representative average-use of 392 cycles per year and the sum of both:

(A) The product of the per-cycle machine electrical energy consumption in kilowatt-hours per cycle, determined according to 4.1.5 of appendix J before the date that appendix J1 to the subpart becomes mandatory or 4.1.6 of appendix J1 upon the date that appendix J1 to this subpart becomes mandatory, and the representative average unit cost in dollars per kilowatt-hours as provided by the Secretary, and

(B) The product of the per-cycle water energy consumption for gas-heated or oil-heated water in BTU per cycle, determined according to 4.1.4 of appendix J before the date that appendix J1 becomes mandatory or 4.1.4 of appendix J1 upon the date that appendix J1 to this subpart becomes mandatory, and the representative average unit cost in dollars per Btu for oil or gas, as appropriate, as provided by the Secretary, the resulting product then being rounded off to the nearest dollar per year.

(2)(i) The energy factor for automatic and semi-automatic clothes washers is determined in accordance with 4.5 of appendix J before the date that appendix J1 becomes mandatory or 4.5 of appendix J1 upon the date that appendix J1 to this subpart becomes mandatory. The result shall be rounded off to the nearest 0.01 cubic foot per kilowatt-hours.

(ii) The modified energy factor for automatic and semi-automatic clothes washers is determined in accordance with 4.4 of appendix J before the date that appendix J1 becomes mandatory or 4.4 of appendix J1 upon the date that appendix J1 to this subpart becomes mandatory. The result shall be rounded off to the nearest 0.01 cubic foot per kilowatt-hours.

(3) Other useful measures of energy consumption for automatic or semi-automatic clothes washers shall be those measures of energy consumption which the Secretary determines are likely to assist consumers in making purchasing decisions and which are derived from the application of appendix J before the date that appendix J1 becomes mandatory or appendix J1 upon the date that appendix J1 to this subpart becomes mandatory. In addition, the annual water consumption of a clothes washer can be determined by the product of:

(A) The representative average-use of 392 cycles per year, and

(B) The total weighted per-cycle water consumption in gallons per cycle determined according to 4.3.2 of appendix J before the date that appendix J1 becomes mandatory or 4.2.2 of appendix J1 upon the date that appendix J1 to this subpart becomes mandatory. The water consumption factor can be determined in accordance with 4.3.3 of appendix J before the date that appendix

J1 becomes mandatory or 4.2.3 of appendix J1 upon the date that appendix J1 to this subpart becomes mandatory. The remaining moisture content can be determined in accordance with 3.3 of appendix J before the date that appendix J1 becomes mandatory or 3.8 of appendix J1 upon the date that appendix J1 to this subpart becomes mandatory.

(k)–(l) [Reserved]

(m) *Central Air Conditioners.* (1) The estimated annual operating cost for cooling-only units and air-source heat pumps shall be one of the following:

(i) For cooling-only units or the cooling portion of the estimated annual operating cost for air-source heat pumps which provide both heating and cooling, the product of: (A) The quotient of the cooling capacity, in Btu's per hour, determined from the steady-state wet-coil test (Test A) measured at the highest compressor speed, as described in section 3.1 of appendix M to this subpart, divided by the seasonal energy efficiency ratio, in Btu's per watt-hour, determined from section 5.1 of appendix M to this subpart; (B) the representative average use cycle for cooling of 1,000 hours per year; (C) a conversion factor of 0.001 kilowatt per watt; and (D) the representative average unit cost of electricity in dollars per kilowatt-hour as provided pursuant to section 323(b)(2) of the Act, the resulting product then being rounded off to the nearest dollar per year;

(ii) For air-source heat pumps which provide only heating or the heating portion of the estimated annual operating cost for air-source heat pumps which provide both heating and cooling, the product of: (A) The quotient of the standardized design heating requirement, in Btu's per hour, nearest to the capacity measured in the high temperature test, determined in sections 5.2 and 6.2.6 of appendix M to this subpart, divided by the heating seasonal performance factor, in Btu's per watt-hour, calculated for heating region IV corresponding to the above mentioned standardized design heating requirement determined from section 5.2 of appendix M to this subpart; (B) the representative average use cycle for heating of 2,080 hours per year; (C) the adjustment factor of 0.77 which serves to adjust the calculated design heating requirement and heating load hours to the actual load experienced by a heating system; (D) a conversion factor of 0.001 kilowatt per watt; and (E) the representative average unit cost of electricity in dollars per kilowatt-hour as provided pursuant to section 323(b)(2) of the Act, the resulting product then being rounded off to the nearest dollar per year; or

(iii) For air-source heat pumps which provide both heating and cooling, the estimated annual operating cost is the sum of the quantity determined in paragraph (m)(1)(i) of this section added to the quantity determined in paragraph (m)(1)(ii) of this section.

(2) The estimated regional annual operating cost for cooling-only units and for air-source heat pumps shall be one of the following:

(i) For cooling-only units or the cooling portion of the estimated regional annual operating cost for air-source heat pumps which provide both heating and cooling, the product of: (A) The quotient of the cooling capacity, in Btu's per hour, determined from the steady-state wet-coil test (Test A) measured at the highest compressor speed, as described in section 3.1 of appendix M to this subpart, divided by the seasonal energy efficiency ratio, in Btu's per watt-hour, determined from section 5.1 of appendix M to this subpart; (B) the estimated number of regional cooling load hours per year determined from section 6.1.3 of appendix M to this subpart; (C) a conversion factor of 0.001 kilowatts per watt; and (D) the representative average unit cost of electricity in dollars per kilowatt-hour as provided pursuant to section 323(b)(2) of the Act, the resulting product then being rounded off to the nearest dollar per year;

(ii) For air-source heat pumps which provide only heating or the heating portion of the estimated regional annual operating cost for air-source heat pumps which provide both heating and cooling, the product of: (A) The quotient of the standardized design heating requirement, in Btu's per hour, nearest to the capacity measured in the high temperature test (Test A), determined in sections 5.2 and 6.2.6 of appendix M to this subpart, divided by

the heating seasonal performance factor, in Btu's per watt-hour, calculated for the appropriate region of interest and corresponding to the above mentioned standardized design heating requirement determined from section 5.2 of appendix M to this subpart; (B) the estimated number of regional heating load hours per year determined from section 6.2.5 of appendix M to this subpart; (C) the adjustment factor of 0.77 which serves to adjust the calculated design heating requirement and heating load hours to the actual load experienced by a heating system; (D) a conversion factor of 0.001 kilowatts per watt; and (E) the representative average unit cost of electricity in dollars per kilowatt-hour as provided pursuant to section 323(b)(2) of the Act, the resulting product then being rounded off to the nearest dollar per year; or

(iii) For air-source heat pumps which provide both heating and cooling, the estimated regional annual operating cost is the sum of the quantity determined in paragraph (m)(3)(i) of this section added to the quantity determined in paragraph (m)(3)(ii) of this section.

(3) The measure(s) of efficiency for cooling-only units and air-source heat pumps shall be one or more of the following:

(i) The seasonal energy efficiency ratio for cooling-only units and air-source heat pumps which provide cooling shall be the seasonal energy efficiency ratio, in Btu's per watt-hour, determined according to section 5.1 of appendix M to this subpart, rounded off to the nearest 0.05.

(ii) The heating seasonal performance factors for air-source heat pumps shall be the heating seasonal performance factors, in Btu's per watt-hour, determined according to section 5.2 of appendix M to this subpart for each applicable standardized design heating requirement within each climatic region, rounded off to the nearest 0.05.

(iii) The annual performance factors for air-source heat pumps which provide heating and cooling, shall be the annual performance factors, in Btu's per watt-hour, determined according to section 5.3 of appendix M to this subpart for each standardized design heating requirement within each climatic region, rounded off to the nearest 0.05.

(4) Other useful measures of energy consumption for central air conditioners shall be those measures of energy consumption which the Secretary of Energy determines are likely to assist consumers in making purchasing decisions and which are derived from the application of appendix M to this subpart.

(5) After September 12, 1988, all measures of energy consumption shall be determined by the test method as set forth in appendix M to this subpart; or by an alternate rating method set forth in § 430.23(m)(4) as approved by the Assistant Secretary for Conservation and Renewable Energy in accordance with § 430.23(m)(5).

(n) *Furnaces.* (1) The estimated annual operating cost for furnaces is the sum of: (i) The product of the average annual fuel energy consumption, in Btu's per year for gas or oil furnaces or in kilowatt-hours per year for electric furnaces, determined according to section 10.2.2 or 10.3 of appendix N of this subpart, respectively, and the representative average unit cost in dollars per Btu for gas or oil, or dollars per kilowatt-hour for electric, as appropriate, as provided pursuant to section 323(b)(2) of the Act, plus (ii) the product of the average annual auxiliary electric energy consumption in kilowatt-hours per year determined according to section 10.2.3 of appendix N of this subpart, and the representative average unit cost in dollars per kilowatt-hour as provided pursuant to section 323(b)(2) of the Act, the resulting sum then being rounded off to the nearest dollar per year. (For furnaces which operate with variable inputs, an estimated annual operating cost is to be calculated for each degree of oversizing specified in section 10 of appendix N of this subpart.)

(2) The annual fuel utilization efficiency for furnaces, expressed in percent, is the ratio of annual fuel output of useful energy delivered to the heated space to the annual fuel energy input to the furnace determined according to section 10.1 of appendix N of this subpart for gas and oil furnaces and determined in accordance with section 11.1

of American National Standards Institute/American Society of Heating, Refrigerating, and Air-Conditioning Engineers (ANSI/ASHRAE) Standard 103–1993 for electric furnaces.

(3) The estimated regional annual operating cost for furnaces is the sum of: (i) The product of the regional annual fuel energy consumption in Btu's per year for gas or oil furnaces or in kilowatt-hours per year for electric furnaces, determined according to section 10.5.1 or 10.5.3 of appendix N of this subpart, respectively, and the representative average unit cost in dollars per Btu for gas or oil, or dollars per kilowatt-hour for electric, as appropriate, as provided pursuant to section 323(b)(2) of the Act, plus (ii) the product of the regional annual auxiliary electrical energy consumption in kilowatt-hours per year, determined according to section 10.5.2 of appendix N of this subpart, and the representative average unit cost in dollars per kilowatt-hour as provided pursuant to section 323(b)(2) of the Act, the resulting sum then being rounded off to the nearest dollar per year.

(4) The energy factor for furnaces, expressed in percent, is the ratio of annual fuel output of useful energy delivered to the heated space to the total annual energy input to the furnace determined according to section 10.4 of appendix N of this subpart.

(5) Other useful measures of energy consumption for furnaces shall be those measures of energy consumption which the Secretary determines are likely to assist consumers in making purchasing decisions and which are derived from the application of appendix N of this subpart.

(o) *Vented home heating equipment*. (1) The annual fuel utilization efficiency for vented home heating equipment, expressed in percent, which is the ratio of the annual fuel output of useful energy delivered to the heated space to the annual fuel energy input to the vented heater, shall be determined either according to section 4.1.17 of appendix O of this subpart for vented heaters without either manual controls or thermal stack dampers; according to section 4.2.6 of appendix O of this subpart for vented heaters equipped with manual controls; or according to section 4.3.7 of appendix O of this subpart for vented heaters equipped with thermal stack dampers.

(2) The estimated annual operating cost for vented home heating equipment is the sum of: (i) The product of the average annual fuel energy consumption, in Btu's per year for natural gas, propane, or oil fueled vented home heating equipment, determined according to section 4.6.2 of appendix O of this subpart, and the representative average unit cost in dollars per Btu for natural gas, propane, or oil, as appropriate, as provided pursuant to section 323(b)(2) of the Act; plus (ii) The product of the average annual auxiliary electric energy consumption in kilowatt-hours per year determined according to section 4.6.3 of appendix O of this subpart, and the representative average unit cost in dollars per kilowatt-hours as provided pursuant to section 323(b)(2) of the Act, the resulting sum then being rounded off to the nearest dollar per year.

(3) The estimated operating cost per million Btu output for gas or oil vented home heating equipment with an auxiliary electric system shall be the product of: (A) The quotient of one million Btu divided by the sum of: (*1*) The product of the maximum fuel input in Btu's per hour as determined in 3.1.1 or 3.1.2 of appendix 0 of this subpart times the annual fuel utilization efficiency in percent as determined in 4.1.17, 4.2.6, or 4.3.7 of this appendix as appropriate divided by 100, plus (*2*) the product of the maximum electric power in watts as determined in 3.1.3 of appendix 0 of this subpart times the quantity 3.412; and (B) of the sum of: (*1*) the product of the maximum fuel input in Btu's per hour as determined in 3.1.1 of this appendix times the representative unit cost in dollars per Btu for natural gas, propane, or oil, as appropriate, as provided pursuant to section 323(b)(2) of the Act; plus (*2*) the product of the maximum auxiliary electric power in kilowatts as determined in 3.1.3 of appendix O of this subpart times the representative unit cost in dollars per kilowatt-hour as provided pursuant to section 323(b)(2) of the Act, the resulting quantity shall be rounded off to the nearest 0.01 dollar per million Btu output.

(4) Other useful measures of energy consumption for vented home heating equipment shall be those measures of energy consumption which the Secretary determines are likely to assist consumers in making purchasing decisions and which are derived from the application of appendix O of this subpart.

(p) *Pool heaters.* (1) The estimated annual operating cost for pool heaters is the sum of:

(i) The product of the average annual fuel energy consumption, in Btu's per year, of natural gas or oil fueled pool heaters, determined according to section 4.2 of appendix P of this subpart, and the representative average unit cost in dollars per Btu for natural gas or oil, as appropriate, as provided pursuant to section 323(b)(2) of the Act; plus

(ii) The product of the average annual auxiliary electric energy consumption in kilowatt-hours per year determined according to section 4.3 of appendix P of this subpart, and the representative average unit cost in dollars per kilowatt-hours as provided pursuant to section 323(b)(2) of the Act, the resulting sum then being rounded off to the nearest dollar per year.

(2) The thermal efficiency of pool heaters, expressed as a percent, shall be determined in accordance with section 4 of appendix P to this subpart.

(q) *Fluorescent Lamp Ballasts.* (1) The Estimated Annual Energy Consumption (EAEC) for fluorescent lamp ballasts, expressed in kilowatt-hours per year, shall be the product of: (i) The input power in kilowatts as determined in accordance with section 3.3.1 of appendix Q to this subpart and (ii) the representative average use cycle of 1,000 hours per year, the resulting product then being rounded off to the nearest kilowatt-hour per year.

(2) Ballast Efficacy Factor (BEF) shall be as determined in section 4.2 of appendix Q of this subpart.

(3) The Estimated Annual Operating Cost (EAOC) for fluorescent lamp ballasts, expressed in dollars per year, shall be the product of: (i) The representative average unit energy cost of electricity in dollars per kilowatt-hour as provided by the Secretary, (ii) the representative average use cycle of 1,000 hours per year, and (iii) the input power in kilowatts as determined in accordance with section 3.3.1 of appendix Q to this subpart, the resulting product then being rounded off to the nearest dollar per year.

(4) Other useful measures which may be applicable. [Reserved]

(r) *General Service Fluorescent Lamps and General Service Incandescent Lamps.* (1) The estimated annual energy consumption for general service fluorescent lamps and incandescent reflector lamps, expressed in kilowatt-hours per year, shall be the product of the input power in kilowatts as determined in accordance with section 4 of Appendix R to this subpart and an average annual use specified by the manufacturer, with the resulting product rounded off to the nearest kilowatt-hour per year. Manufacturers must provide a clear and accurate description of the assumptions used for the estimated annual energy consumption.

(2) The lamp efficacy for general service fluorescent lamps shall be equal to the average lumen output divided by the average lamp wattage as determined in section 4 of Appendix R of this subpart, with the resulting quotient rounded off to the nearest lumen per watt.

(3) The lamp efficacy for incandescent reflector lamps shall be equal to the average lumen output divided by the average lamp wattage as determined in section 4 of Appendix R of this subpart, with the resulting quotient rounded off to the nearest tenth of a lumen per watt.

(4) The color rendering index of a general service fluorescent lamp shall be tested and determined in accordance with section 4.5 of Appendix R of this subpart and rounded off to the nearest unit.

(s) *Faucets.* The maximum permissible water use allowed for lavatory faucets, lavatory replacement aerators, kitchen faucets, and kitchen replacement aerators, expressed in gallons and liters per minute (gpm and L/min), shall be measured in accordance to section 2(a) of Appendix S of this subpart. The maximum permissible water use allowed for metering faucets, expressed in gallons and liters per cycle (gal/cycle and L/cycle), shall be measured

in accordance to section 2(a) of Appendix S of this subpart.

(t) *Showerheads*. The maximum permissible water use allowed for showerheads, expressed in gallons and liters per minute (gpm and L/min), shall be measured in accordance to section 2(b) of Appendix S of this subpart.

(u) *Water closets*. The maximum permissible water use allowed for water closets, expressed in gallons and liters per flush (gpf and Lpf), shall be measured in accordance to section 3(a) of Appendix T of this subpart.

(v) *Urinals*. The maximum permissible water use allowed for urinals, expressed in gallons and liters per flush (gpf and Lpf), shall be measured in accordance to section 3(b) of Appendix T of this subpart.

[42 FR 27898, June 1, 1977]

EDITORIAL NOTE: For FEDERAL REGISTER citations affecting § 430.23, see the List of CFR Sections Affected, which appears in the Finding Aids section of the printed volume and on GPO Access.

EFFECTIVE DATE NOTE: At 70 FR 59134, Oct. 11, 2005, § 430.23 was amended by revising the section heading, paragraph (m) introductory heading and paragraph (m)(1), (2), and (3), effective Apr. 10, 2006. For the convenience of the user the revised text follows:

§ 430.23 Test procedure for measures of energy consumption.

* * * * *

(m) *Central air conditioners and heat pumps*. (1) The estimated annual operating cost for cooling-only units and air-source heat pumps shall be one of the following:

(i) For cooling-only units or the cooling portion of the estimated annual operating cost for air-source heat pumps which provide both heating and cooling, the product of:

(A) The quotient of the cooling capacity, in Btu's per hour, determined from the steady-state wet-coil test (A or A_2 Test), as described in section 3.2 of appendix M to this subpart, divided by the seasonal energy efficiency ratio (SEER), in Btu's per watt-hour, determined from section 4.1 of appendix M to this subpart;

(B) The representative average use cycle for cooling of 1,000 hours per year;

(C) A conversion factor of 0.001 kilowatt per watt; and

(D) The representative average unit cost of electricity in dollars per kilowatt-hour as provided pursuant to section 323(b)(2) of the Act, the resulting product then being rounded off to the nearest dollar per year.

(ii) For air-source heat pumps which provide only heating or the heating portion of the estimated annual operating cost for air-source heat pumps which provide both heating and cooling, the product of:

(A) The quotient of the standardized design heating requirement, in Btu's per hour, nearest to the heating Region IV minimum design heating requirement, determined in section 4.2 of appendix M to this subpart, divided by the heating seasonal performance factor (HSPF), in Btu's per watt-hour, calculated for heating Region IV corresponding to the above-mentioned standardized design heating requirement and determined in section 4.2 of appendix M to this subpart;

(B) The representative average use cycle for heating of 2,080 hours per year;

(C) The adjustment factor of 0.77 which serves to adjust the calculated design heating requirement and heating load hours to the actual load experienced by a heating system;

(D) A conversion factor of 0.001 kilowatt per watt; and

(E) The representative average unit cost of electricity in dollars per kilowatt-hour as provided pursuant to section 323(b)(2) of the Act, the resulting product then being rounded off to the nearest dollar per year.

(iii) For air-source heat pumps which provide both heating and cooling, the estimated annual operating cost is the sum of the quantity determined in paragraph (m)(1)(i) of this section added to the quantity determined in paragraph (m)(1)(ii) of this section.

(2) The estimated regional annual operating cost for cooling-only units and for air-source heat pumps shall be one of the following:

(i) For cooling-only units or the cooling portion of the estimated regional annual operating cost for air-source heat pumps which provide both heating and cooling, the product of:

(A) The quotient of the cooling capacity, in Btu's per hour, determined from the steady-state wet-coil test (A or A_2 Test), as described in section 3.2 of appendix M to this subpart, divided by the seasonal energy efficiency ratio (SEER), in Btu's per watt-hour, determined from section 4.1 of appendix M to this subpart;

(B) The estimated number of regional cooling load hours per year determined from Figure 3 in section 4.3 of appendix M to this subpart;

(C) A conversion factor of 0.001 kilowatts per watt; and

(D) The representative average unit cost of electricity in dollars per kilowatt-hour as provided pursuant to section 323(b)(2) of the Act, the resulting product then being rounded off to the nearest dollar per year.

(ii) For air-source heat pumps which provide only heating or the heating portion of the estimated regional annual operating cost

for air-source heat pumps which provide both heating and cooling, the product of:

(A) The estimated number of regional heating load hours per year determined from Figure 2 in section 4.3 of appendix M to this subpart;

(B) The quotient of the standardized design heating requirement, in Btu's per hour, for the appropriate generalized climatic region of interest (*i.e.*, corresponding to the regional heating load hours from ''A'') and determined in section 4.2 of appendix M to this subpart, divided by the heating seasonal performance factor (HSPF), in Btu's per watt-hour, calculated for the appropriate generalized climatic region of interest and corresponding to the above-mentioned standardized design heating requirement while being determined in section 4.2 of appendix M to this subpart;

(C) The adjustment factor of 0.77 which serves to adjust the calculated design heating requirement and heating load hours to the actual load experienced by a heating system;

(D) A conversion factor of 0.001 kilowatts per watt; and

(E) The representative average unit cost of electricity in dollars per kilowatt-hour as provided pursuant to section 323(b)(2) of the Act, the resulting product then being rounded off to the nearest dollar per year.

(iii) For air-source heat pumps which provide both heating and cooling, the estimated regional annual operating cost is the sum of the quantity determined in paragraph (m)(3)(i) of this section added to the quantity determined in paragraph (m)(3)(ii) of this section.

(3) The measure(s) of efficiency of performance for cooling-only units and air-source heat pumps shall be one or more of the following:

(i) The cooling mode efficiency measure for cooling-only units and air-source heat pumps which provide cooling shall be the seasonal energy efficiency ratio (SEER), in Btu's per watt-hour, determined according to section 4.1 of appendix M to this subpart, rounded off to the nearest 0.05.

(ii) The heating mode efficiency measure for air-source heat pumps shall be the heating seasonal performance factors (HSPF), in Btu's per watt-hour, determined according to section 4.2 of appendix M to this subpart for each applicable standardized design heating requirement within each climatic region, rounded off to the nearest 0.05.

(iii) The annual efficiency measure for air-source heat pumps which provide heating and cooling, shall be the annual performance factors (APF), in Btu's per watt-hour, determined according to section 4.3 of appendix M to this subpart for each standardized design heating requirement within each climatic region, rounded off to the nearest 0.05.

* * * * *

§ 430.24 Units to be tested.

When testing of a covered product is required to comply with section 323(c) of the Act, or to comply with rules prescribed under sections 324 or 325 of the Act, a sample shall be selected and tested comprised of units which are production units, or are representative of production units of the basic model being tested, and shall meet the following applicable criteria.

(a)(1) For each basic model[1] of electric refrigerators and electric refrigerator-freezers, a sample of sufficient size shall be tested to insure that—

(i) Any represented value of estimated annual operating cost, energy consumption or other measure of energy consumption of a basic model for which consumers would favor lower values shall be no less than the higher of (A) the mean of the sample or (B) the upper 95 percent confidence limit of the true mean divided by 1.10, and

(ii) Any represented value of the energy factor or other measure of energy consumption of a basic model for which consumer would favor higher values shall be no greater than the lower of (A) the mean of the sample or (B) the lower 95 percent confidence limit of the true mean divided by .90.

(b)(1) For each basic model[1] of freezers, a sample of sufficient size shall be tested to insure that—

(i) Any represented value of estimated annual operating cost, energy consumption or other measure of energy consumption of a basic model for which consumers would favor lower values shall be no less than the higher of (A) the mean of the sample or (B) the upper 95 percent confidence limit of the true mean divided by 1.10, and

(ii) Any represented value of the energy factor or other measure of energy consumption of a basic model for which consumers would favor higher values

[1] Components of similar design may be substituted without requiring additional testing if the represented measures of energy consumption continue to satisfy the applicable sampling provision.

shall be no greater than the lower of (A) the mean of the sample or (B) the lower 95 percent confidence limit of the true mean divided by .90.

(c)(1) For each basic model[1] of dishwashers, a sample of sufficient size shall be tested to insure that—

(i) Any represented value of estimated annual operating cost, energy consumption or other measure of energy consumption of a basic model for which consumers would favor lower values shall be no less than the higher of (A) the mean of the sample or (B) the upper 97½ percent confidence limit of the true mean divided by 1.05, and

(ii) Any represented value of the energy factor or other measure of energy consumption of a basic model for which consumers would favor higher values shall be no greater than the lower of (A) the mean of the sample or (B) the lower 97½ percent confidence limit of the true mean divided by .95.

(d)(1) For each basic model[1] of clothes dryers a sample of sufficient size shall be tested to insure that—

(i) Any represented value of estimated annual operating cost, energy consumption or other measure of energy consumption of a basic model for which consumers would favor lower values shall be no less than the higher of (A) the mean of the sample or (B) the upper 97½ percent confidence limit of the true mean divided by 1.05, and

(ii) Any represented value of the energy factor or other measure of energy consumption of a basic model for which consumers would favor higher values shall be no greater than the lower of (A) the mean of the sample or (B) the lower 97½ percent confidence limit of the true mean divided by .95.

(e)(1) For each basic model[1] of water heaters, a sample of sufficient size shall be tested to insure that—

(i) Any represented value of estimated annual operating cost, energy consumption or other measure of energy consumption of a basic model for which consumers would favor lower values shall be no less than the higher of (A) the mean of the sample or (B) the upper 95 percent confidence limit of the true mean divided by 1.10, and

(ii) Any represented value of the energy factor or other measure of energy consumption of a basic model for which consumers would favor higher values shall be no greater than the lower of (A) the mean of the sample or (B) the lower 95 percent confidence limit of the true mean divided by .90.

(f)(1) For each basic model[1] of room air conditioners, a sample of sufficient size shall be tested to insure that—

(i) Any represented value of estimated annual operating cost, energy consumption or other measure of energy consumption of a basic model for which consumers would favor lower values shall be no less than the higher of (A) the mean of the sample or (B) the upper 97½ percent confidence limit of the true mean divided by 1.05, and

(ii) Any represented value of the energy efficiency ratio or other measure of energy consumption of a basic model for which consumers would favor higher values shall be no greater than the lower of (A) the mean of the sample or (B) the lower 97½ percent confidence limit of the true mean divided by .95.

(g)(1) For each basic model[1] of unvented home heating equipment (not including furnaces), a sample of sufficient size shall be tested to insure that—

(i) Any represented value of estimated annual operating cost, energy consumption or other measure of energy consumption of a basic model for which consumers would favor lower values shall be no less than the higher of (A) the mean of the sample or (B) the upper 97½ percent confidence limit of the true mean divided by 1.075, and

(ii) Any represented value of the annual fuel utilization efficiency or other measure of energy consumption of a basic model for which consumers would favor higher values shall be not greater than the lower of (A) the mean of the sample or (B) the lower 97½ percent confidence limit of the true mean divided by .925.

(h)(1) For each basic model[1] of television sets, a sample of sufficient size shall be tested to insure that—

(i) Any represented value of estimated annual operating cost, energy

[1] Components of similar design may be substituted without requiring additional testing if the represented measures of energy consumption continue to satisfy the applicable sampling provision.

consumption or other measure of energy consumption of a basic model for which consumers would favor lower values shall be no less than the higher of (A) the mean of the sample or (B) the upper 97½ percent confidence limit of the true mean divided by 1.05, and

(ii) Any represented value of the energy factor or other measure of energy consumption of a basic model for which consumers would favor higher values shall be no greater than the lower of (A) the mean of the sample or (B) the lower 97½ percent confidence limit of the true mean divided by .95.

(i)(1) Except as provided in paragraph (i)(2) of this section, for each basic model[1] of conventional cooking tops, conventional ovens and microwave ovens a sample of sufficient size shall be tested to insure that—

(i) Any represented value of estimated annual operating cost, energy consumption or other measure of energy consumption of a basic model for which consumers would favor lower values shall be no less than the higher of (A) the mean of the sample or (B) the upper 97½ percent confidence limit of the true mean divided by 1.05, and

(ii) Any represented value of the energy factor or other measure of energy consumption of a basic model for which consumers would favor higher values shall be no greater than the lower of (A) the mean of the sample or (B) the lower 97½ percent confidence limit of the true mean divided by .95.

(2) Basic models need not be tested which differ from other tested basic models by only the design of oven doors the use of which leads to improved efficiency and decreased energy consumption and estimated annual operating cost. Any represented values of measures of energy consumption for basic models not tested shall be the same as for the tested basic model.

(j)(1) For each basic model[1] of clothes washers, a sample of sufficient size shall be tested to insure that—

(i) Any represented value of estimated annual operating cost, energy consumption or other measure of energy consumption of a basic model for which consumers would favor lower values shall be no less than the higher of (A) the mean of the sample or (B) the upper 97½ percent confidence limit of the true mean divided by 1.05, and

(ii) Any represented value of the energy factor or other measure of energy consumption of a basic model for which consumers would favor higher values shall be no greater than the lower of (A) the mean of the sample or (B) the lower 97½ percent confidence limit of the true mean divided by .95.

(k)–(l) [Reserved]

(m)(1) For central air conditioners, each condensing unit shall have a condenser-evaporator coil combination selected and a sample of sufficient size tested in accordance with applicable provisions of this subpart such that—

(i) Any represented value of estimated annual operating cost, energy consumption or other measure of energy consumption of the condenser-evaporator coil combination for which consumers would favor lower values shall be no less than the higher of (A) the mean of the sample or (B) the upper 90 percent confidence limit of the true mean divided by 1.05, and

(ii) Any represented value of the energy efficiency or other measure of energy consumption of the condenser-evaporator coil combination for which consumers would favor higher values shall be no greater than the lower of (A) the mean of the sample or (B) the lower 90 percent confidence limit of the true mean divided by 0.95.

(2) The condenser-evaporator coil combination selected for tests pursuant to paragraph (m)(1) of this section shall be that combination manufactured by the condensing unit manufacturer likely to have the largest volume of retail sales. Components of similar design may be substituted without requiring additional testing if the represented measures of energy consumption continue to satisfy the applicable sampling provisions of paragraphs (m)(1)(i) and (m)(1)(ii) of this section. For every other condenser-evaporator coil combination manufactured by the same manufacturer or in part by a component manufacturer using that same condensing unit, either—

(i) A sample of sufficient size, comprised of production units or representing production units, shall be tested to ensure that the requirements of paragraphs (m)(1)(i) and (m)(1)(ii) of

this section are met for such other condenser-evaporator coil combinations; or

(ii) The representative values of the measures of energy consumption shall be based on an alternative rating method that has been approved by DOE in accordance with the provisions of paragraphs (m)(4) and (m)(5) of this section.

(3) Whenever the representative values of the measures of energy consumption, as determined by the provisions of paragraph (m)(2)(ii) of this section, do not agree within five percent of the representative values of the measures of energy consumption as determined by actual testing, the representative values determined by actual testing shall be used to comply with section 323(c) of the Act, or to comply with rules prescribed under section 324 of the Act.

(4) The basis of the alternative rating method referred to in paragraph (m)(2)(ii) of this section shall be a representation of the test data and calculations of a mechanical vapor compression refrigeration cycle. The major components in the refrigeration cycle shall be modeled as ''fits'' to manufacturer performance data or by graphic or tabular performance data. Heat transfer characteristics of coils may be modeled as a function of face area, number of rows, fins per inch, refrigerant circuitry, air flow rate and entering air enthalpy. Additional performance-related characteristics to be considered may include type of expansion device, refrigerant flow rate through the expansion device, power of the indoor fan and degradation coefficient.

(5) Manufacturers who elect to use an alternative rating method for determining measures of energy consumption under paragraphs (m)(2)(ii) and (m)(4) of this section must submit a request to DOE for reviewing the alternative rating method to the Assistant Secretary of Conservation and Renewable Energy, 1000 Independence Avenue, SW., Washington, DC 20585, and receive approval to use the alternative method by the Assistant Secretary before the alternative method may be used for rating central air conditioners.

(6) Each request to DOE for reviewing an alternative rating method shall include:

(i) The name, address and telephone number of the official representing the manufacturer.

(ii) Complete documentation of the alternative rating procedure, including the computer code when a computer model is used.

(iii) Test data for two coils from two different coil families for two different condensing units. The tested capacities for the matched systems for the two condensing units shall differ by at least a factor of two. Rating information for the mixed systems shall include the ratings from testing, and from the alternative rating method.

(iv) Complete test data, product information, and related information to allow DOE to verify the rating information submitted by the manufacturer.

(7) Manufacturers that elect to use an alternative rating method for determining measures of energy consumption under paragraphs (m)(2)(ii) and (m)(4) of this section must either subject a sample of their units to independent testing on a regular basis, e.g., voluntary certification program, or have the representations reviewed and certified by an independent state-registered professional engineer who is not an employee of the manufacturer. The registered professional engineer is to certify that the results of the alternative rating procedure accurately represent the energy consumption of the unit(s). The manufacturer is to keep the registered professional engineer's certifications on file for review by DOE for as long as said combination is made available for sale by the manufacturer. Any change to be made to the alternative rating method, must be approved by DOE prior to its use for rating.

(8) Manufacturers who choose to use computer simulation or engineering analysis for determining measures of energy consumption under paragraphs (m)(2)(ii) and (m)(5) of this section shall permit representatives of the Department of Energy to inspect for verification purposes the simulation method or methods used. This inspection may include conducting simulations to predict the performance of particular condenser-evaporator coil combinations specified by DOE, analysis of

previous simulations conducted by a manufacturer, or both.

(n)(1) For each basic model[1] of furnaces, other than basic models of those sectional cast-iron boilers which may be aggregated into groups having identical intermediate sections and combustion chambers, a sample of sufficient size shall be tested to insure that—

(i) Any represented value of estimated annual operating cost, energy consumption or other measure of energy consumption of a basic model for which consumers would favor lower values shall be no less than the higher of (A) the mean of the sample, or (B) the upper 97½ percent confidence limit of the true mean divided by 1.05, and

(ii) Any represented value of the annual fuel utilization efficiency or other measure of energy consumption of a basic model for which consumers would favor higher values shall be no greater than the lower of (A) the mean of the sample, or (B) the lower 97½ percent confidence limit of the true mean divided by .95.

(2) For the lowest capacity basic model[1] of a group of basic models of those sectional cast-iron boilers having identical intermediate sections and combustion chambers, a sample of sufficient size shall be tested to insure that—

(i) Any represented value of estimated annual operating cost, energy consumption or other measure of energy consumption of a basic model for which consumers would favor lower values shall be no less than the higher of (A) the mean of the sample, or (B) the upper 97½ percent confidence limit of the true mean divided by 1.05, and

(ii) Any represented value of the fuel utilization efficiency or other measure of energy consumption of a basic model for which consumers would favor higher values shall be no greater than the lower of (A) the mean of the sample, or (B) the lower 97½ percent confidence limit of the true mean divided by .95.

(3) For the highest capacity basic model[1] of a group of basic models of those sectional cast-iron boilers having identical intermediate sections and combustion chambers, a sample of sufficient size shall be tested to insure that—

(i) Any represented value of estimated annual operating cost, energy consumption or other measure of energy consumption of a basic model for which consumers would favor lower values be no less than the higher of (A) the mean of the sample, or (B) the upper 97½ percent confidence limit of the true mean divided by 1.05, and

(ii) Any represented value of the fuel utilization efficiency or other measure of energy consumption of a basic model for which consumers would favor higher values shall be no greater than the lower of (A) the mean of the sample, or (B) the lower 97½ percent confidence limit of the true mean divided by .05.

(4) For basic model[1] or capacity other than the highest or lowest of the group of basic models[1] of sectional cast-iron boilers having identical intermediate sections and combustion chambers, represented values of measures of energy consumption shall be determined by either—

(i) A linear interpolation of data obtained for the smallest and largest capacity units of the family, or

(ii) Testing a sample of sufficient size to insure that (A) any represented value of estimated annual operating cost, energy consumption or other measure of energy consumption of a basic model for which consumers would favor lower values shall be no less than the higher of (*1*) the mean of the sample, or (*2*) the upper 97½ percent confidence limit of the true mean divided by 1.05, and (B) any represented value of the energy factor or other measure of energy consumption of a basic model for which consumers would favor higher values shall be no greater than the lower of (*1*) the mean of the sample, or (*2*) the lower 97½ percent confidence limit of the true mean divided by .95.

(5) Whenever measures of energy consumption determined by linear interpolation do not agree with measures of energy consumption determined by actual testing, the values determined by testing will be assumed to be the more reliable values.

[1] Components of similar design may be substituted without requiring additional testing if the represented measures of energy consumption continue to satisfy the applicable sampling provision.

(6) In calculating the measures of energy consumption for each unit tested, use the design heating requirement corresponding to the mean of the capacities of the units of the sample.

(o)(1) For each basic model[1] of vented home heating equipment (not including furnaces) a sample of sufficient size shall be tested to insure that—

(i) Any represented value of estimated annual operating cost, energy consumption or other measure of energy consumption of a basic model for which consumers would favor lower values shall be no less than the higher of (A) the mean of the sample or (B) the upper 97½ percent confidence limit of the true mean divided by 1.05, and

(ii) Any represented value of the fuel utilization efficiency or other measure of energy consumption of a basic model for which consumers would favor higher values shall be no greater than the lower of (A) the mean of the sample or (B) the lower 97½ percent confidence limit of the true mean divided by .95.

(2) In calculating the measures of energy consumption for each unit tested use the design heating requirement corresponding to the mean of the capacities of the units of the sample.

(p)(1) For each basic model[1] of pool heater a sample of sufficient size shall be tested to insure that—

(i) [Reserved]

(ii) Any represented value of the fuel utilization efficiency or other measure of energy consumption of a basic model for which consumers would favor higher values shall be no greater than the lower of (A) the mean of the sample or (B) the lower 97½ percent confidence limit of the true mean divided by .95.

(q)(1) For each basic model of fluorescent lamp ballasts, as defined in paragraph (14) of § 430.2, a sample of sufficient size, no less than four, shall be tested to insure that—

(i) Any represented value of estimated annual energy operating costs, energy consumption, or other measure of energy consumption of a basic model for which consumers would favor lower values shall be no less than the higher of (A) the mean of the sample or (B) the upper 99 percent confidence limit of the true mean divided by 1.01, and

(ii) Any represented value of the ballast efficacy factor or other measure of the energy consumption of a basic model for which consumers would favor a higher value shall be no greater than the lower of (A) the mean of the sample or (B) the lower 99 percent confidence limit of the true mean divided by 0.99.

(r)(1) For each basic model of general service fluorescent lamp and incandescent reflector lamp, samples of production lamps shall be tested and the results for all samples shall be averaged for a 12-month period. A minimum sample of 21 lamps shall be tested. The manufacturer shall randomly select a minimum of three lamps from each month of production for a minimum of 7 out of the 12-month period. In the instance where production occurs during fewer than 7 of such 12 months, the manufacturer shall randomly select a 3 or more lamps from each month of production, where the number of lamps selected for each month shall be distributed as evenly as practicable among the months of production to attain a minimum sample of 21 lamps. Any represented value of lamp efficacy of a basic model shall be based on the sample and shall be no greater than the lower of the mean of the sample or the lower 95-percent confidence limit of the true mean (X_L) divided by 0.97, i.e.,

$$\frac{\bar{x} - t_{0.95}\left(\frac{s}{\sqrt{n}}\right)}{0.97}$$

where:

$\bar{x}$ = the mean luminous efficacy of the sample
s = the sample standard deviation
$t_{0.95}$ = the t statistic for a 95-percent confidence limit for n-1 degrees of freedom (from statistical tables)
n = sample size

(2) For each basic model of general service fluorescent lamp, the color rendering index (CRI) shall be measured from the same lamps selected for the lumen output and watts input measurements in paragraph (r)(1) of this section, i.e., the manufacturer shall measure all lamps for lumens, watts input, and CRI. The CRI shall be represented as the average of a minimum

[1] Components of similar design may be substituted without requiring additional testing if the represented measures of energy consumption continue to satisfy the applicable sampling provision.

sample of 21 lamps and shall be no greater than the lower of the mean of the sample or the lower 95-percent confidence limit of the true mean (X_L) divided by 0.97, i.e.,

$$\frac{\bar{x} - t_{0.95}\left(\frac{s}{\sqrt{n}}\right)}{0.97}$$

where:

$\bar{x}$ = the mean color rendering index of the sample

s = the sample standard deviation

$t_{0.95}$ = the t statistic for a 95-percent confidence limit for n-1 degrees of freedom (from statistical tables)

n=sample size

(s) For each basic model of faucet,[1] a sample of sufficient size shall be tested to ensure that any represented value of water consumption of a basic model for which consumers favor lower values shall be no less than the higher of:

(1) The mean of the sample or

(2) The upper 95 percent confidence limit of the true mean divided by 1.05.

(t) For each basic model[1] of showerhead, a sample of sufficient size shall be tested to ensure that any represented value of water consumption of a basic model for which consumers favor lower values shall be no less than the higher of:

(1) The mean of the sample or

(2) The upper 95 percent confidence limit of the true mean divided by 1.05.

(u) For each basic model[1] of water closet, a sample of sufficient size shall be tested to ensure that any represented value of water consumption of a basic model for which consumers favor lower values shall be no less than the higher of:

(1) The mean of the sample or

(2) The upper 90 percent confidence limit of the true mean divided by 1.1.

(v) For each basic model[1] of urinal, a sample of sufficient size shall be tested to ensure that any represented value of water consumption of a basic model for which consumers favor lower values shall be no less than the higher of:

(1) The mean of the sample or

(2) The upper 90 percent confidence limit of the true mean divided by 1.1.

(Energy Policy and Conservation Act, Pub. L. 94–163, as amended by Pub. L. 95–619; Department of Energy Organization Act, Pub. L. 95–91)

[44 FR 22416, Apr. 13, 1979, as amended at 44 FR 39153, July 5, 1979; 44 FR 76706, Dec. 27, 1979; 45 FR 53719, Aug. 12, 1980; 53 FR 8312, Mar. 14, 1988; 54 FR 6075, Feb. 7, 1989; 56 FR 18682, April 24, 1991. Redesignated and amended at 59 FR 49474, 49475, Sept. 28, 1994; 62 FR 29239, May 29, 1997; 63 FR 13316, Mar. 18, 1998]

EFFECTIVE DATE NOTE: At 70 FR 59135, Oct. 11, 2005, § 430.24 was amended by revising the introductory text for paragraph (m)(1), effective Apr. 10, 2006. For the convenience of the user the revised text follows:

§ 430.24 Units to be tested.

* * * * *

(m)(1) For central air conditioners and heat pumps, each condensing unit (outdoor unit) shall have a condenser-evaporator (outdoor coil-indoor coil) combination selected and a sample of sufficient size tested in accordance with applicable provisions of this subpart such that

* * * * *

§ 430.25 Laboratory Accreditation Program.

The testing for general service fluorescent lamps, general service incandescent lamps, incandescent reflector lamps, and medium base compact fluorescent lamps, shall be performed in accordance with Appendix R to this subpart and shall be conducted by test laboratories accredited by the National Voluntary Laboratory Accreditation Program (NVLAP) or by an accrediting organization recognized by NVLAP. NVLAP is a program of the National Institute of Standards and Technology, U. S. Department of Commerce. NVLAP standards for accreditation of laboratories that test for compliance with standards for lamp efficacy and CRI are given in 15 CFR part 285 as supplemented by *NVLAP Handbook 150–01*, ''Energy Efficient Lighting Products, Lamps and Luminaires.'' A manufacturer's or importer's own laboratory, if

[1] Components of similar design may be substituted without requiring additional testing if the represented measures of energy or water consumption continue to satisfy the applicable sampling provision.

accredited, may conduct the applicable testing.

[62 FR 29240, May 29, 1997]

§ 430.27 Petitions for waiver and applications for interim waiver.

(a)(1) Any interested person may submit a petition to waive for a particular basic model any requirements of § 430.23, or of any appendix to this subpart, upon the grounds that the basic model contains one or more design characteristics which either prevent testing of the basic model according to the prescribed test procedures, or the prescribed test procedures may evaluate the basic model in a manner so unrepresentative of its true energy consumption characteristics, or water consumption characteristics (in the case of faucets, showerheads, water closets, and urinals) as to provide materially inaccurate comparative data.

(2) Any interested person who has submitted a Petition for Waiver as provided in this subpart may also file an Application for Interim Waiver of the applicable test procedure requirements.

(b)(1) A Petition for Waiver shall be submitted, in triplicate, to the Assistant Secretary for Conservation and Renewable Energy, United States Department of Energy. Each Petition for Waiver shall:

(i) Identify the particular basic model(s) for which a waiver is requested, the design characteristic(s) constituting the grounds for the petition, and the specific requirements sought to be waived and shall discuss in detail the need for the requested waiver;

(ii) Identify manufacturers of all other basic models marketed in the United States and known to the petitioner to incorporate similar design characteristic(s);

(iii) Include any alternate test procedures known to the petitioner to evaluate in a manner representative of the energy consumption characteristics, or water consumption characteristics (in the case of faucets, showerheads, water closets, and urinals) of the basic model; and

(iv) Be signed by the petitioner or by an authorized representative. In accordance with the provisions set forth in 10 CFR 1004.11, any request for confidential treatment of any information contained in a Petition for Waiver or in supporting documentation must be accompanied by a copy of the petition, application or supporting documentation from which the information claimed to be confidential has been deleted. DOE shall publish in the FEDERAL REGISTER the petition and supporting documents from which confidential information, as determined by DOE, has been deleted in accordance with 10 CFR 1004.11 and shall solicit comments, data and information with respect to the determination of the petition. Any person submitting written comments to DOE with the respect to a Petition for Waiver shall also send a copy of such comments to the petitioner. In accordance with paragraph (i) of this section, a petitioner may submit a rebuttal statement to the Assistant Secretary for Conservation and Renewable Energy.

(2) An Application for Interim Waiver shall be submitted in triplicate, with the required three copies of the Petition for Waiver, to the Assistant Secretary for Conservation and Renewable Energy, U.S. Department of Energy. Each Application for Interim Waiver shall reference the Petition for Waiver by identifying the particular basic model(s) for which a waiver and temporary exception are being sought. Each Application for Interim Waiver shall demonstrate likely success of the Petition for Waiver and shall address what economic hardship and/or competitive disadvantage is likely to result absent a favorable determination on the Application for Interim Waiver. Each Application for Interim Waiver shall be signed by the applicant or by an authorized representative.

(c)(1) Each petitioner, after filing a Petition for Waiver with DOE, and after the Petition for Waiver has been published in the FEDERAL REGISTER, shall, within five working days of such publication, notify in writing all known manufacturers of domestically marketed units of the same product type (as listed in section 322(a) of the Act) and shall include in the notice a statement that DOE has published in the FEDERAL REGISTER on a certain

date the Petition for Waiver and supporting documents from which confidential information, if any, as determined by DOE, has been deleted in accordance with 10 CFR 1004.11. Each petitioner, in complying with the requirements of this paragraph, shall file with DOE a statement certifying the names and addresses of each person to whom a notice of the Petition for Waiver has been sent.

(2) Each applicant for Interim Waiver, whether filing jointly with, or subsequent to, a Petition for Waiver with DOE, shall concurrently notify in writing all known manufacturers of domestically marketed units of the same product type (as listed in Section 322(a) of the Act) and shall include in the notice a copy of the Petition for Waiver and a copy of the Application for Interim Waiver. In complying with this section, each applicant shall in the written notification include a statement that the Assistant Secretary for Conservation and Renewable Energy will receive and consider timely written comments on the Application for Interim Waiver. Each applicant, upon filing an Application for Interim Waiver, shall in complying with the requirements of this paragraph certify to DOE that a copy of these documents have been sent to all known manufacturers of domestically marked units of the same product type (as listed in section 322(a) of the Act). Such certification shall include the names and addresses of such persons. Each applicant also shall comply with the provisions of paragraph (c)(1) of this section with respect to the petition for waiver.

(d) Any person submitting written comments to DOE with respect to an Application for Interim Waiver shall also send a copy of the comments to the applicant.

(e) If administratively feasible, applicant shall be notified in writing of the disposition of the Application for Interim Waiver within 15 business days of receipt of the application. Notice of DOE's determination on the Application for Interim Waiver shall be published in the FEDERAL REGISTER.

(f) The filing of an Application for Interim Waiver shall not constitute grounds for noncompliance with any requirements of this subpart, until an Interim Waiver has been granted.

(g) An Interim Waiver from test procedure requirements will be granted by the Assistant Secretary for Conservation and Renewable Energy if it is determined that the applicant will experience economic hardship if the Application for Interim Waiver is denied, if it appears likely that the Petition for Waiver will be granted, and/or the Assistant Secretary determines that it would be desirable for public policy reasons to grant immediate relief pending a determination on the Petition for Waiver.

(h) An interim waiver will terminate 180 days after issuance or upon the determination on the Petition for Waiver, whichever occurs first. An interim waiver may be extended by DOE for 180 days. Notice of such extension and/or any modification of the terms or duration of the interim waiver shall be published in the FEDERAL REGISTER, and shall be based on relevant information contained in the record and any comments received subsequent to issuance of the interim waiver.

(i) Following publication of the Petition for Waiver in the FEDERAL REGISTER, a petitioner may, within 10 working days of receipt of a copy of any comments submitted in accordance with paragraph (b)(1) of this section, submit a rebuttal statement to the Assistant Secretary for Conservation and Renewable Energy. A petitioner may rebut more than one response in a single rebuttal statement.

(j) The petitioner shall be notified in writing as soon as practicable of the disposition of each Petition for Waiver. The Assistant Secretary for Conservation and Renewable Energy shall issue a decision on the petition as soon as is practicable following receipt and review of the Petition for Waiver and other applicable documents, including, but not limited to, comments and rebuttal statements.

(k) The filing of a Petition for Waiver shall not constitute grounds for noncompliance with any requirements of this subpart, until a waiver or interim waiver has been granted.

(l) Waivers will be granted by the Assistant Secretary for Conservation and Renewable Energy, if it is determined

that the basic model for which the waiver was requested contains a design characteristic which either prevents testing of the basic model according to the prescribed test procedures, or the prescribed test procedures may evaluate the basic model in a manner so unrepresentative of its true energy consumption characteristics, or water consumption characteristics (in the case of faucets, showerheads, water closets, and urinals) as to provide materially inaccurate comparative data. Waivers may be granted subject to conditions, which may include adherence to alternate test procedures specified by the Assistant Secretary for Conservation and Renewable Energy. The Assistant Secretary shall consult with the Federal Trade Commission prior to granting any waiver, and shall promptly publish in the FEDERAL REGISTER notice of each waiver granted or denied, and any limiting conditions of each waiver granted.

(m) Within one year of the granting of any waiver, the Department of Energy will publish in the FEDERAL REGISTER a notice of proposed rulemaking to amend its regulations so as to eliminate any need for the continuation of such waiver. As soon thereafter as practicable, the Department of Energy will publish in the FEDERAL REGISTER a final rule. Such waiver will terminate on the effective date of such final rule.

(n) In order to exhaust administrative remedies, any person aggrieved by an action under this section must file an appeal with the DOE's Office of Hearings and Appeals as provided in 10 CFR part 1003, subpart C.

[51 FR 42826, Nov. 26, 1986, as amended at 60 FR 15017, Mar. 21, 1995; 63 FR 13316, Mar. 18, 1998]

APPENDIX A1 TO SUBPART B OF PART 430—UNIFORM TEST METHOD FOR MEASURING THE ENERGY CONSUMPTION OF ELECTRIC REFRIGERATORS AND ELECTRIC REFRIGERATOR-FREEZERS

1. Definitions

1.1 ''HRF–1–1979'' means the Association of Home Appliance Manufacturers standard for household refrigerators, combination refrigerator-freezers, and household freezers, also approved as an American National Standard as a revision of ANSI B 38.1–1970.

1.2 ''Adjusted total volume'' means the sum of (i) the fresh food compartment volume as defined in HRF–1–1979 in cubic feet, and (ii) the product of an adjustment factor and the net freezer compartment volume as defined in HRF–1–1979, in cubic feet.

1.3 ''Anti-sweat heater'' means a device incorporated into the design of a refrigerator or refrigerator-freezer to prevent the accumulation of moisture on exterior surfaces of the cabinet under conditions of high ambient humidity.

1.4 ''All-refrigerator'' means an electric refrigerator which does not include a compartment for the freezing and long time storage of food at temperatures below 32 °F. (0.0 °C.). It may include a compartment of 0.50 cubic feet capacity (14.2 liters) or less for the freezing and storage of ice.

1.5 ''Cycle'' means the period of 24 hours for which the energy use of an electric refrigerator or electric refrigerator-freezer is calculated as though the consumer activated compartment temperature controls were set so that the desired compartment temperatures were maintained.

1.6 ''Cycle type'' means the set of test conditions having the calculated effect of operating an electric refrigerator or electric refrigerator-freezer for a period of 24 hours, with the consumer activated controls other than those that control compartment temperatures set to establish various operating characteristics.

1.7 ''Standard cycle'' means the cycle type in which the anti-sweat heater control, when provided, is set in the highest energy consuming position.

1.8 ''Automatic defrost'' means a system in which the defrost cycle is automatically initiated and terminated, with resumption of normal refrigeration at the conclusion of the defrost operation. The system automatically prevents the permanent formation of frost on all refrigerated surfaces. Nominal refrigerated food temperatures are maintained during the operation of the automatic defrost system.

1.9 ''Long-time Automatic Defrost'' means an automatic defrost system where successive defrost cycles are separated by 14 hours or more of compressor-operating time.

1.10 ''Stabilization Period'' means the total period of time during which steady-state conditions are being attained or evaluated.

1.11 ''Variable defrost control'' means a long-time automatic defrost system (except the 14-hour defrost qualification does not apply) where successive defrost cycles are determined by an operating condition variable or variables other than solely compressor operating time. This includes any electrical or mechanical device. Demand defrost is a type of variable defrost control.

1.12 ''Externally vented refrigerator or refrigerator-freezer'' means an electric refrigerator or electric refrigerator-freezer that: has an enclosed condenser or an enclosed condenser/compressor compartment and a set of air ducts for transferring the exterior air from outside the building envelope into, through and out of the refrigerator or refrigerator-freezer cabinet; is capable of mixing exterior air with the room air before discharging into, through, and out of the condenser or condenser/compressor compartment; includes thermostatically controlled dampers or controls that enable the mixing of the exterior and room air at low outdoor temperatures, and the exclusion of exterior air when the outdoor air temperature is above 80 °F or the room air temperature; and may have a thermostatically actuated exterior air fan.

2. Test Conditions

2.1 Ambient temperature. The ambient temperature shall be 90.0 ±1 °F. (32.3±0.6 °C.) during the stabilization period and during the test period. The ambient temperature shall be 80±2 °F dry bulb and 67 °F wet bulb during the stabilization period and during the test period when the unit is tested in accordance with section 3.3.

2.2 Operational conditions. The electric refrigerator or electric refrigerator-freezer shall be installed and its operating conditions maintained in accordance with HRF–1–1979, section 7.2 through section 7.4.3.3, except that the vertical ambient temperature gradient at locations 10 inches (25.4 cm) out from the centers of the two sides of the unit being tested is to be maintained during the test. Unless the area is obstructed by shields or baffles, the gradient is to be maintained from 2 inches (5.1 cm) above the floor or supporting platform to a height one foot (30.5 cm) above the unit under test. Defrost controls are to be operative and the anti-sweat heater switch is to be ''on'' during one test and ''off'' during a second test. Other exceptions are noted in 2.3, 2.4, and 5.1 below.

2.3 Conditions for automatic defrost refrigerator-freezers. For automatic defrost refrigerator-freezers, the freezer compartments shall not be loaded with any frozen food packages. Cylindrical metallic masses of dimensions 1.12±0.25 inches (2.9±0.6 cm) in diameter and height shall be attached in good thermal contact with each temperature sensor within the refrigerated compartments. All temperature measuring sensor masses shall be supported by nonthermally conductive supports in such a manner that there will be at least one inch (2.5 cm) of air space separating the thermal mass from contact with any surface. In case of interference with hardware at the sensor locations specified in section 5.1, the sensors shall be placed at the nearest adjacent location such that there will be a one inch air space separating the sensor mass from the hardware.

2.4 Conditions for all-refrigerators. There shall be no load in the freezer compartment during the test.

2.5 Steady State Condition. Steady state conditions exist if the temperature measurements in all measured compartments taken at four minute intervals or less during a stabilization period are not changing at a rate greater than 0.042 °F. (0.023 °C.) per hour as determined by the applicable condition of A or B.

A. The average of the measurements during a two hour period if no cycling occurs or during a number of complete repetitive compressor cycles through a period of no less than two hours is compare to the average over an equivalent time period with three hours elapsed between the two measurement periods.

B. If A above cannot be used, the average of the measurements during a number of complete repetitive compressor cycles through a period of no less than two hours and including the last complete cycle prior to a defrost period, or if no cycling occurs, the average of the measurements during the last two hours prior to a defrost period; are compared to the same averaging period prior to the following defrost period.

2.6 Exterior air for externally vented refrigerator or refrigerator-freezer. An exterior air source shall be provided with adjustable temperature and pressure capabilities. The exterior air temperature shall be adjustable from 35±1 °F (1.7±0.6 °C) to 90±1 °F (32.2±0.6 °C).

2.6.1 Air duct. The exterior air shall pass from the exterior air source to the test unit through an insulated air duct.

2.6.2 Air temperature measurement. The air temperature entering the condenser or condenser/compressor compartment shall be maintained to ±3 °F (1.7 °C) during the stabilization and test periods and shall be measured at the inlet point of the condenser or condenser/compressor compartment (''condenser inlet''). Temperature measurements shall be taken from at least three temperature sensors or one sensor per 4 square inches of the air duct cross sectional area, whichever is greater, and shall be averaged. For a unit that has a condenser air fan, a minimum of three temperature sensors at the condenser fan discharge shall be required. Temperature sensors shall be arranged to be at the centers of equally divided cross sectional areas. The exterior air temperature, at its source, shall be measured and maintained to ±1 °F (0.6 °C) during the test period. The temperature measuring devices shall have an error not greater than ±0.5 °F (±0.3 °C). Measurements of the air temperature during the test period shall be taken at regular intervals not to exceed four minutes.

2.6.3 Exterior air static pressure. The exterior air static pressure at the inlet point of the unit shall be adjusted to maintain a negative pressure of 0.20″±0.05″ water column (62 Pa±12.5 Pa) for all air flow rates supplied to the unit. The pressure sensor shall be located on a straight duct with a distance of at least 7.5 times the diameter of the duct upstream and a distance of at least 3 times the diameter of the duct downstream. There shall be four static pressure taps at 90°angles apart. The four pressures shall be averaged by interconnecting the four pressure taps. The air pressure measuring instrument shall have an error not greater than 0.01″ water column (2.5 Pa).

3. Test Control Settings

3.1 Model with no user operable temperature control. A test shall be performed during which the compartment temperatures and energy use shall be measured. A second test shall be performed with the temperature control electrically short circuited to cause the compressor to run continuously.

3.2 Model with user operable temperature control. Testing shall be performed in accordance with one of the following sections using the standardized temperatures of:

All-refrigerator: 38 °F. (3.3 °C.) fresh food compartment temperature

Refrigerator: 15 °F. (−9.4 °C.) freezer compartment temperature

Refrigerator-freezer: 5 °F. (−15 °C.) freezer compartment temperature

Variable defrost control models: 5 °F (−15 °C) freezer compartment temperature and 38 ±2 °F fresh food compartment temperature during steady-state conditions with no door-openings. If both settings cannot be obtained, then test with the fresh food compartment temperature at 38±2 °F and the freezer compartment as close to 5 °F as possible.

3.2.1 A first test shall be performed with all compartment temperature controls set at their median position midway between their warmest and coldest settings. Knob detents shall be mechanically defeated if necessary to attain a median setting. A second test shall be performed with all controls set at either their warmest or their coldest setting (not electrically or mechanically bypassed), whichever is appropriate, to attempt to achieve compartment temperatures measured during the two tests which bound (i.e., one is above and one is below) the standardized temperature for the type of product being tested. If the compartment temperatures measured during these two tests bound the appropriate standardized temperature, then these test results shall be used to determine energy consumption. If the compartment temperature measured with all controls set at their coldest setting is above the standardized temperature, a third test shall be performed with all controls set at their warmest setting and the result of this test shall be used with the result of the test performed with all controls set at their coldest setting to determine energy consumption. If the compartment temperature measured with all controls set at their warmest setting is below the standardized temperature; and the fresh food compartment temperature is below 45 °F. (7.22 °C.) in the case of a refrigerator or a refrigerator-freezer, excluding an all-refrigerator, then the result of this test alone will be used to determine energy consumption.

3.2.2 Alternatively, a first test may be performed with all temperature controls set at their warmest setting. If the compartment temperature is below the appropriate standardized temperature, and the fresh food compartment temperature is below 45 °F. (7.22 °C.) in the case of a refrigerator or a refrigerator-freezer, excluding an all-refrigerator, then the result of this test alone will be used to determine energy consumption. If the above conditions are not met, then the unit shall be tested in accordance with 3.2.1 above.

3.2.3 Alternatively, a first test may be performed with all temperature controls set at their coldest setting. If the compartment temperature is above the appropriate standardized temperature, a second test shall be performed with all controls set at their warmest control setting and the results of these two tests shall be used to determine energy consumption. If the above condition is not met, then the unit shall be tested in accordance with 3.2.1 above.

3.3 Variable defrost control optional test. After a steady-state condition is achieved, the optional test requires door-openings for 12±2 seconds every 60 minutes on the fresh food compartment door and a simultaneous 12±2 second freezer compartment door-opening occurring every 4th time, to obtain 24 fresh food and six freezer compartment door-openings per 24-hour period. The first freezer door-opening shall be simultaneous with the fourth fresh food door-opening. The doors are to be opened 60° to 90°with an average velocity for the leading edge of the door of approximately 2 ft./sec. Prior to the initiation of the door-opening sequence, the refrigerator defrost control mechanism may be reinitiated in order to minimize the test duration.

4. Test Period

4.1 Test Period. Tests shall be performed by establishing the conditions set forth in Section 2, and using control settings as set forth in Section 3, above.

4.1.1 Nonautomatic Defrost. If the model being tested has no automatic defrost system, the test time period shall start after steady state conditions have been achieved

and be of not less than three hours in duration. During the test period, the compressor motor shall complete two or more whole compressor cycles (a compressor cycle is a complete ''on'' and a complete ''off'' period of the motor). If no ''off'' cycling will occur, as determined during the stabilization period, the test period shall be three hours. If incomplete cycling (less than two compressor cycles) occurs during a 24 hour period, the results of the 24 hour period shall be used.

4.1.2 Automatic Defrost. If the model being tested has an automatic defrost system, the test time period shall start after steady state conditions have been achieved and be from one point during a defrost period to the same point during the next defrost period. If the model being tested has a long-time automatic defrost system, the alternative provisions of 4.1.2.1 may be used.If the model being tested has a variable defrost control, the provisions of section 4.1.2.2 or 4.1.2.3 shall apply. If the model has a dual compressor system the provisions of 4.1.2.4 shall apply.

4.1.2.1 Long-time Automatic Defrost. If the model being tested has a long-time automatic defrost system, the test time period may consist of two parts. A first part would be the same as the test for a unit having no defrost provisions (section 4.1.1). The second part would start when a defrost is initiated when the compressor ''on'' cycle is terminated prior to start of the defrost heater and terminates at the second turn ''on'' of the compressor or four hours from the initiation of the defrost heater, whichever comes first. See diagram in Figure 1 to this section.

Figure 1

Long Time Automatic Defrost Diagram

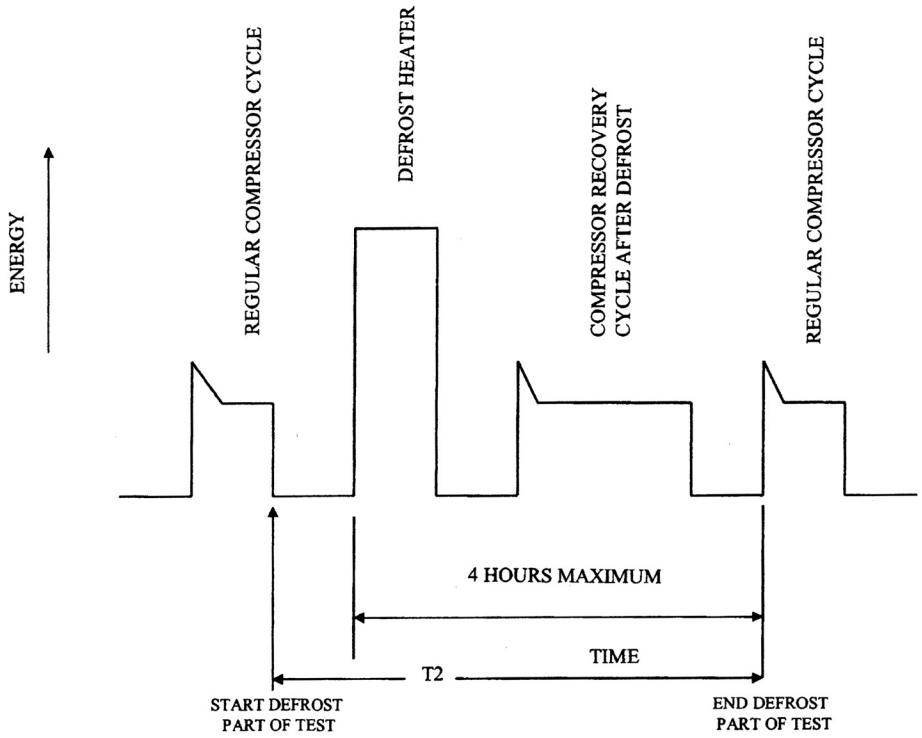

4.1.2.2 Variable defrost control. If the model being tested has a variable defrost control system, the test shall consist of three parts. Two parts shall be the same as the test for long-time automatic defrost (section 4.1.2.1). The third part is the optional test to determine the time between defrosts (section 5.2.1.3). The third part is used by manufacturers that choose not to accept the default value of F of 0.20, to calculate CT.

4.1.2.3 Variable defrost control optional test. After steady-state conditions with no door openings are achieved in accordance with section 3.3 above, the test is continued using the above daily door-opening sequence until stabilized operation is achieved. Stabilization is defined as a minimum of three consecutive defrost cycles with times between defrosts that will allow the calculation of a Mean Time Between Defrosts (MTBD1) that satisfies the statistical relationship of 90 percent confidence. The test is repeated on at least one more unit of the model and until the Mean Time Between Defrosts for the multiple unit tests (MTBD2) satisfies the statistical relationship. If the time between defrosts is greater than 96 hours (compressor ''on'' time) and this defrost period can be repeated on a second unit, the test may be terminated at 96 hours (CT) and the absolute time value used for MTBD for each unit.

4.1.2.4 Dual compressor systems with automatic defrost. If the model being tested has separate compressor systems for the refrigerator and freezer sections, each with its own automatic defrost system, then the two-part method in 4.1.2.1 shall be used. The second part of the method will be conducted separately for each automatic defrost system. The auxiliary components (fan motors, anti-sweat heaters, etc.) will be identified for each system and the energy consumption measured during each test.

5. Test Measurements

5.1 Temperature Measurements. Temperature measurements shall be made at the locations prescribed in Figures 7.1 and 7.2 of HRF–1–1979 and shall be accurate to within ±0.5 °F. (0.3 °C.) of true value. No freezer temperature measurements need be taken in an all-refrigerator model.

If the interior arrangements of the cabinet do not conform with those shown in Figure 7.1 and 7.2 of HRF–1–1979, measurements shall be taken at selected locations chosen to represent approximately the entire refrigerated compartment. The locations selected shall be a matter of record.

5.1.1 Measured Temperature. The measured temperature of a compartment is to be the average of all sensor temperature readings taken in that compartment at a particular time. Measurements shall be taken at regular intervals not to exceed four minutes.

5.1.2 Compartment Temperature. The compartment temperature for each test period shall be an average of the measured temperatures taken in a compartment during a complete cycle or several complete cycles of the compressor motor (one compressor cycle is one complete motor ''on'' and one complete motor ''off'' period). For long-time automatic defrost models, compartment temperatures shall be those measured in the first part of the test period specified in 4.1.1. For models equipped with variable defrost controls, compartment temperatures shall be those measured in the first part of the test period specified in 4.1.2.2 above.

5.1.2.1 The number of complete compressor motor cycles over which the measured temperatures in a compartment are to be averaged to determine compartment temperature shall be equal to the number of minutes between measured temperature readings, rounded up to the next whole minute or a number of complete cycles over a time period exceeding one hour. One of the cycles shall be the last complete compressor motor cycle during the test period.

5.1.2.2 If no compressor motor cycling occurs, the compartment temperature shall be the average of the measured temperatures taken during the last thirty-two minutes of the test period.

5.1.2.3 If incomplete cycling occurs, the compartment temperatures shall be the average of the measured temperatures taken during the last three hours of the last complete ''on'' period.

5.2 Energy Measurements

5.2.1 Per-day Energy Consumption. The energy consumption in kilowatt-hours per day for each test period shall be the energy expended during the test period as specified in section 4.1 adjusted to a 24 hour period. The adjustment shall be determined as follows:

5.2.1.1 Nonautomatic and automatic defrost models. The energy consumption in kilowatt-hours per day shall be calculated equivalent to:

$$ET=EP\times 1440/T$$

where

ET=test cycle energy expended in kilowatt-hours per day,

EP=energy expended in kilowatt-hours during the test period,

T=length of time of the test period in minutes, and

1440=conversion factor to adjust to a 24 hour period in minutes per day.

5.2.1.2 Long-time Automatic Defrost. If the two part test method is used, the energy consumption in kilowatt-hours per day shall be calculated equivalent to:

$$ET=(1440\times EP1/T1)+((EP2-(EP1\times T2/T1))\times 12/CT)$$

where

ET and 1440 are defined in 5.2.1.1,

EP1=energy expended in kilowatt-hours during the first part of the test,

EP2=energy expended in kilowatt-hours during the second part of the test,

T1 and T2=length of time in minutes of the first and second test parts respectively,

CT=Defrost timer run time in hours required to cause it to go through a complete cycle, to the nearest tenth hour per cycle, and

12=factor to adjust for a 50% run time of the compressor in hours per day.

5.2.1.3 Variable defrost control. The energy consumption in kilowatt-hours per day shall be calculated equivalent to:

$ET=(1440\times EP1/T1)+(EP2-(EP1\times T2/T1))\times(12/CT)$ where 1440 is defined in 5.2.1.1 and EP1, EP2, T1, T2 and 12 are defined in 5.2.1.2.

$CT=CT_L\times CT_M)/(F\times(CT_M-CT_L)+CT_L)$

CT_L=least or shortest time between defrosts in tenths of an hour (greater than or equal to six but less than or equal to 12 hours)

CT_M=maximum time between defrost cycles in tenths of an hour (greater than CT_L but not more than 96 hours)

F=ratio of per day energy consumption in excess of the least energy and the maximum difference in per day energy consumption and is equal to

$F = (1/CT - 1/CT_M)/(1/CT_L - 1/CT_M = (ET-ET_L)/ET_M - ET_L)$ or 0.20 in lieu of testing to find CT.

ET_L = least electrical energy used (kilowatt hours)

ET_M=maximum electrical energy used (kilowatt hours). For demand defrost models with no values for CT_L and CT_M in the algorithm the default values of 12 and 84 shall be used, respectively.

5.2.1.4 Optional test method for variable defrost controls.

$CT = MTBD\times 0.5$

where:

MTBD = mean time between defrosts

$$MTBD = \frac{\sum X}{N}$$

where:

X=in time between defrost cycles

N=number of defrost cycles

5.2.1.5 Dual compressor systems with dual automatic defrost. The two-part test method in section 4.1.2.2 must be used, the energy consumption in kilowatt per day shall be calculated equivalent to:

$ET=(1440 \times EP1/T1) + (EP2_F - (EP_F \times T2/T1)) \times 12/CT_F + (EP2_R - (EP_R \times T3/T1)) \times 12/CT_R$

Where 1440, EP1, T1, EP2, 12, and CT are defined in 5.2.1.2

EP_F = energy expended in kilowatt-hours during the second part of the test for the freezer system by the freezer system.

$EP2_F$ = total energy expended during the second part of the test for the freezer system.

EP_R = energy expended in kilowatt-hours during the second part of the test for the refrigerator system by the refrigerator system.

$EP2_R$ = total energy expended during the second part of the test for the refrigerator system.

T2 and T3 = length of time in minutes of the second test part for the freezer and refrigerator systems respectively.

CT_F = compressor ''on'' time between freezer defrosts (tenths of an hour).

CT_R = compressor ''on'' time between refrigerator defrosts (tenths of an hour).

5.3 Volume measurements. The electric refrigerator or electric refrigerator-freezer total refrigerated volume, VT, shall be measured in accordance with HRF–1–1979, section 3.20 and sections 4.2 through 4.3 and be calculated equivalent to:

VT=VF+VFF

where

VT=total refrigerated volume in cubic feet,

VF=freezer compartment volume in cubic feet, and

VFF=fresh food compartment volume in cubic feet.

5.4 Externally vented refrigerator or refrigerator-freezer units. All test measurements for the externally vented refrigerator or refrigerator-freezer shall be made in accordance with the requirements of other sections of this appendix, except as modified in this section 5.4 or other sections expressly applicable to externally vented refrigerators or refrigerator-freezers.

5.4.1 Operability of thermostatic and mixing of air controls. Prior to conducting energy consumption tests, the operability of thermostatic controls that permit the mixing of exterior and ambient air when exterior air temperatures are less than 60 °F must be verified. The operability of such controls shall be verified by operating the unit under ambient air temperature of 90 °F and exterior air temperature of 45 °F. If the inlet air entering the condenser or condenser/compressor compartment is maintained at 60 °F, plus or minus three degrees, energy consumption of the unit shall be measured under 5.4.2.2 and 5.4.2.3. If the inlet air entering the condenser or condenser/compressor compartment is not maintained at 60 °F, plus or minus three degrees, energy consumption of the unit shall also be measured under 5.4.2.4.

5.4.2 Energy consumption tests.

5.4.2.1 Correction factor test. To enable calculation of a correction factor, K, two full

cycle tests shall be conducted to measure energy consumption of the unit with air mixing controls disabled and the condenser inlet air temperatures set at 90 °F (32.2 °C) and 80 °F (26.7 °C). Both tests shall be conducted with all compartment temperature controls set at the position midway between their warmest and coldest settings and the anti-sweat heater switch off. Record the energy consumptions ec_{90} and ec_{80}, in kWh/day.

5.4.2.2 Energy consumption at 90 °F. The unit shall be tested at 90 °F (32.2 °C) exterior air temperature to record the energy consumptions $(e_{90})_i$ in kWh/day. For a given setting of the anti-sweat heater, i corresponds to each of the two states of the compartment temperature control positions.

5.4.2.3 Energy consumption at 60 °F. The unit shall be tested at 60 °F (26.7 °C) exterior air temperature to record the energy consumptions $(e_{60})_i$ in kWh/day. For a given setting of the anti-sweat heater, i corresponds to each of the two states of the compartment temperature control positions.

5.4.2.4 Energy consumption if mixing controls do not operate properly. If the operability of temperature and mixing controls has not been verified as required under 5.4.1, the unit shall be tested at 50 °F (10.0 °C) and 30 °F (−1.1 °C) exterior air temperatures to record the energy consumptions $(e_{50})_i$ and $(e_{30})_i$. For a given setting of the anti-sweat heater, i corresponds to each of the two states of the compartment temperature control positions.

6. Calculation of Derived Results from Test Measurements

6.1 Adjusted Total Volume.

6.1.1 Electric refrigerators. The adjusted total volume, VA, for electric refrigerators under test shall be defined as:

$$VA=(VF\times CR)+VFF$$

where

VA=adjusted total volume in cubic feet,
VF and VFF are defined in 5.3, and
CR=adjustment factor of 1.44 for refrigerators other than all-refrigerators, or 1.0 for all-refrigerators, dimensionless,

6.1.2 Electric refrigerator-freezers. The adjusted total volume, VA, for electric refrigerator-freezers under test shall be calculated as follows:

$$VA=(VF\times CRF)+VFF$$

where

VF and VFF are defined in 5.3 and VA is defined in 6.1.1,
CRF=adjustment factor of 1.63, dimensionless,

6.2 Average Per-Cycle Energy consumption.

6.2.1 All-refrigerator Models. The average per-cycle energy consumption for a cycle type is expressed in kilowatt-hours per cycle to the nearest one hundredth (0.01) kilowatt-hour and shall depend upon the temperature attainable in the fresh food compartment as shown below.

6.2.1.1 If the fresh food compartment temperature is always below 38.0 °F. (3.3 °C.), the average per-cycle energy consumption shall be equivalent to:

$$E=ET1$$

where

E=Total per-cycle energy consumption in kilowatt-hours per day,
ET is defined in 5.2.1, and Number 1 indicates the test period during which the highest fresh food compartment temperature is measured.

6.2.1.2 If one of the fresh food compartment temperatures measured for a test period is greater than 38.0 °F. (3.3 °C.), the average per-cycle energy consumption shall be equivalent to:

$$E=ET1+((ET2-ET1)\times(38.0-TR1)/(TR2-TR1))$$

where

E is defined in 6.2.1.1,
ET is defined in 5.2.1,
TR=Fresh food compartment temperature determined according to 5.1.2 in degrees F,
Number 1 and 2 indicates measurements taken during the first and second test period as appropriate, and
38.0=Standardized fresh food compartment temperature in degrees F.

6.2.2 Refrigerators and refrigerator-freezers. The average per-cycle energy consumption for a cycle type is expressed in kilowatt-hours per-cycle to the nearest one hundredth (0.01) kilowatt-hour and shall be defined in the applicable following manner.

6.2.2.1 If the fresh food compartment temperature is always at or below 45 °F. (7.2 °C.) in both of the tests and the freezer compartment temperature is always at or below 15 °F. (−9.4 °C.) in both tests of a refrigerator or at or below 5 °F. (−15 °C.) in both tests of a refrigerator-freezer, the per-cycle energy consumption shall be:

$$E=ET1$$

where

E is defined in 6.2.1.1,
ET is defined in 5.2.1, and
Number 1 indicates the test period during which the highest freezer compartment temperature was measured.

6.2.2.2 If the conditions of 6.2.2.1 do not exist, the per-cycle energy consumption shall be defined by the higher of the two values calculated by the following two formulas:

$$E=ET1+((ET2-ET1)\times(45.0-TR1)/(TR2-TR1))$$

and

$$E=ET1+((ET2-ET1)\times(k-TF1)/(TF2-TF1))$$

where
E is defined in 6.2.1.1,
ET is defined in 5.2.1,
TR and number 1 and 2 are defined in 6.2.1.2,
TF=Freezer compartment temperature determined according to 5.1.2 in degrees F,
45.0 is a specified fresh food compartment temperature in degree F, and
k is a constant 15.0 for refrigerators or 5.0 for refrigerator-freezers each being standardized freezer compartment temperature in degrees F.

6.3 Externally vented refrigerator or refrigerator-freezers. Per-cycle energy consumption measurements for the externally vented refrigerator or refrigerator-freezer shall be calculated in accordance with the requirements of this Appendix, as modified in sections 6.3.1–6.3.7.

6.3.1 Correction factor. A correction factor, K, shall be calculated as:

$K = ec_{90}/ec_{80}$

where ec_{90} and ec_{80} = the energy consumption test results as determined under 5.4.2.1.

6.3.2 Combining test results of different settings of compartment temperature controls. For a given setting of the anti-sweat heater, follow the calculation procedures of 6.2 to combine the test results for energy consumption of the unit at different temperature control settings for each condenser inlet air temperature tested under 5.4.2.2, 5.4.2.3, and 5.4.2.4, where applicable, $(e_{90})_i$, $(e_{60})_i$, $(e_{50})_i$, and $(e_{30})_i$. The combined values are ε_{90}, ε_{60}, ε_{50}, and ε_{30}, where applicable, in kWh/day.

6.3.3 Energy consumption corrections. For a given setting of the anti-sweat heater, the energy consumptions ε_{90}, ε_{60}, ε_{50}, and ε_{30} calculated in 6.3.2 shall be adjusted by multiplying the correction factor K to obtain the corrected energy consumptions per day, in kWh/day:

$E_{90} = K \times \varepsilon_{90}$,
$E_{60} = K \times \varepsilon_{60}$
$E_{50} = K \times \varepsilon_{50}$, and
$E_{30} = K \times \varepsilon_{30}$

where,

K is determined under section 6.3.1, and ε_{90}, ε_{60}, ε_{50}, and ε_{30} are determined under section 6.3.2.

6.3.4 Energy profile equation. For a given setting of the anti-sweat heater, the energy consumption E_X, in kWh/day, at a specific exterior air temperature between 80 °F (26.7 °C) and 60 °F (26.7 °C) shall be calculated by the following equation:

$E_X = a + bT_X$,

where,

T_X = exterior air temperature in °F;
$a = 3E_{60} - 2E_{90}$, in kWh/day;
$b = (E_{90} - E_{60})/30$, in kWh/day per °F.

6.3.5 Energy consumption at 80 °F (26.7 °C), 75 °F (23.9 °C) and 65 °F (18.3 °C). For a given setting of the anti-sweat heater, calculate the energy consumptions at 80 °F (26.7 °C), 75 °F (23.9 °C) and 65 °F (18.3 °C) exterior air temperatures, E_{80}, E_{75} and E_{65}, respectively, in kWh/day, using the equation in 6.3.4.

6.3.6 National average per cycle energy consumption. For a given setting of the anti-sweat heater, calculate the national average energy consumption, E_N, in kWh/day, using one of the following equations:

$E_N = 0.523 \times E_{60} + 0.165 \times E_{65} + 0.181 \times E_{75} + 0.131 \times E_{80}$, for units not tested under 5.4.2.4,

$E_N = 0.257 \times E_{30} + 0.266 \times E_{50} + 0.165 \times E_{65} + 0.181 \times E_{75} + 0.131 \times E_{80}$, for units tested under 5.4.2.4,

where,

E_{30}, E_{50}, and E_{60} are defined in 6.3.3,
E_{65}, E_{75}, and E_{80} are defined in 6.3.5, and
the coefficients are weather associated weighting factors.

6.3.7 Regional average per cycle energy consumption. If regional average per cycle energy consumption is required to be calculated, for a given setting of the anti-sweat heater, calculate the regional average per cycle energy consumption, E_R, in kWh/day, for the regions in figure 1 using one of the following equations and the coefficients in the table A:

$E_R = a_1 \times E_{60} + c \times E_{65} + d \times E_{75} + e \times E_{80}$, for a unit that is not required to be tested under 5.4.2.4,

$E_R = a \times E_{30} + b \times E_{50} + c \times E_{65} + d \times E_{75} + e \times E_{80}$, for a unit tested under 5.4.2.4,

where:

E_{30}, E_{50}, and E_{60} are defined in 6.3.3,
E_{65}, E_{75}, and E_{80} are defined in 6.3.5, and
a_1, a, b, c, d, e are weather associated weighting factors for the Regions, as specified in Table A:

TABLE A—COEFFICIENTS FOR CALCULATING REGIONAL AVERAGE PER CYCLE ENERGY CONSUMPTION

[Weighting Factors]

Regions	a_1	a	b	c	d	e
I	0.282	0.039	0.244	0.194	0.326	0.198
II	0.486	0.194	0.293	0.191	0.193	0.129
III	0.584	0.302	0.282	0.178	0.159	0.079
IV	0.664	0.420	0.244	0.161	0.121	0.055

FIGURE 1. Weather Regions for the United States

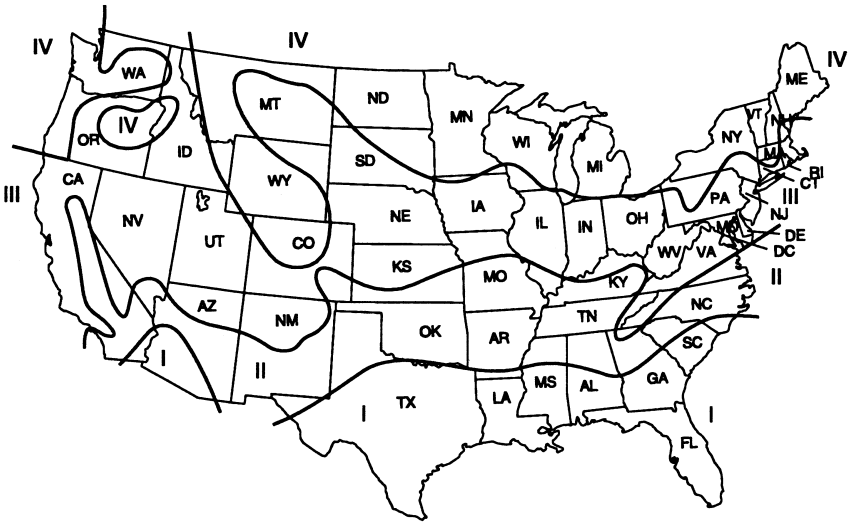

Alaska Region IV

Hawaii Region I

[47 FR 34526, Aug. 10, 1982; 48 FR 13013, Mar. 29, 1983, as amended at 54 FR 36240, Aug. 31, 1989; 54 FR 38788, Sept. 20, 1989; 62 FR 47539, 47540, Sept. 9, 1997; 68 FR 10960, Mar. 7, 2003]

APPENDIX B1 TO SUBPART B OF PART 430—UNIFORM TEST METHOD FOR MEASURING THE ENERGY CONSUMPTION OF FREEZERS

1. Definitions.

1.1 ''HRF–1–1979'' means the Association of Home Appliance Manufacturers standard for household refrigerators, combination refrigerators-freezers, and household freezers, also approved as an American National Standard as a revision of ANSI B38.1–1970.

1.2 ''Anti-sweat heater'' means a device incorporated into the design of a freezer to prevent the accumulation of moisture on exterior surfaces of the cabinet under conditions of high ambient humidity.

1.3 ''Cycle'' means the period of 24 hours for which the energy use of a freezer is calculated as though the consumer-activated compartment temperature controls were preset so that the desired compartment temperatures were maintained.

1.4 ''Cycle type'' means the set of test conditions having the calculated effect of operating a freezer for a period of 24 hours with the consumer-activated controls other than the compartment temperature control set to establish various operating characteristics.

1.5 ''Standard cycle'' means the cycle type in which the anti-sweat heater switch, when provided, is set in the highest energy consuming position.

1.6 ''Adjusted total volume'' means the product of, (1) the freezer volume as defined in HRF–1–1979 in cubic feet, times (2) an adjustment factor.

1.7 ''Automatic Defrost'' means a system in which the defrost cycle is automatically initiated and terminated, with resumption of normal refrigeration at the conclusion of defrost operation. The system automatically prevents the permanent formation of frost on all refrigerated surfaces. Nominal refrigerated food temperatures are maintained during the operation of the automatic defrost system.

1.8 ''Long-time Automatic Defrost'' means an automatic defrost system where successive defrost cycles are separated by 14 hours or more of compressor-operating time.

1.9 ''Stabilization Period'' means the total period of time during which steady-state conditions are being attained or evaluated.

1.10 ''Variable defrost control'' means a long-time automatic defrost system (except the 14-hour defrost qualification does not

apply) where successive defrost cycles are determined by an operating condition variable or variables other than solely compressor operating time. This includes any electrical or mechanical device. Demand defrost is a type of variable defrost control.

1.11 ''Quick freeze'' means an optional feature on freezers which is initiated manually and shut off manually. It bypasses the thermostat control and places the compressor in a steady-state operating condition until it is shut off.

2. Test Conditions.

2.1 Ambient temperature. The ambient temperature shall be 90.0±1.0 °F. (32.2±0.6 °C.) during the stabilization period and during the test period. The ambient temperature shall be 80±2 °F dry bulb and 67 °F wet bulb during the stabilization period and during the test period when the unit is tested in accordance with section 3.3.

2.2 Operational conditions. The freezer shall be installed and its operating conditions maintained in accordance with HRF–1–1979, section 7.2 through section 7.4.3.3, except that the vertical ambient gradient at locations 10 inches (25.4 cm) out from the centers of the two sides of the unit being tested is to be maintained during the test. Unless the area is obstructed by shields or baffles, the gradient is to be maintained from 2 inches (5.1 cm) above the floor or supporting platform to a height one foot (30.5 cm) above the unit under test. Defrost controls are to be operative and the anti-sweat heater switch is to be ''on'' during one test and ''off'' during a second test. The quick freeze option shall be switched off unless specified.

2.3 Steady State Condition. Steady state conditions exist if the temperature measurements taken at four minute intervals or less during a stabilization period are not changing at a rate greater than 0.042 °F. (0.023 °C.) per hour as determined by the applicable condition of A or B.

A—The average of the measurements during a two hour period if no cycling occurs or during a number of complete repetitive compressor cycles through a period of no less than two hours is compared to the average over an equivalent time period with three hours elapsed between the two measurement periods.

B—If A above cannot be used, the average of the measurements during a number of complete repetitive compressor cycles through a period of no less than two hours and including the last complete cycle prior to a defrost period, or if no cycling occurs, the average of the measurements during the last two hours prior to a defrost period; are compared to the same averaging period prior to the following defrost period.

3. Test Control Settings.

3.1 Model with no user operable temperature control. A test shall be performed during which the compartment temperature and energy use shall be measured. A second test shall be performed with the temperature control electrically short circuited to cause the compressor to run continuously. If the model has the quick freeze option, it is to be used to bypass the temperature control.

3.2 Model with user operable temperature control. Testing shall be performed in accordance with one of the following sections using the standardized temperature of 0.0 °F. (−17.8 °C.). Variable defrost control models shall achieve 0±2 °F during the steady-state conditions prior to the optional test with no door openings.

3.2.1 A first test shall be performed with all temperature controls set at their median position midway between their warmest and coldest settings. Knob detents shall be mechanically defeated if necessary to attain a median setting. A second test shall be performed with all controls set at either their warmest or their coldest setting (not electrically or mechanically bypassed), whichever is appropriate, to attempt to achieve compartment temperatures measured during the two tests which bound (i.e., one is above and one is below) the standardized temperature. If the compartment temperatures measured during these two tests bound the standardized temperature, then these test results shall be used to determine energy consumption. If the compartment temperature measured with all controls set at their coldest setting is above the standardized temperature, a third test shall be performed with all controls set at their warmest setting and the result of this test shall be used with the result of the test performed with all controls set at their coldest setting to determine energy consumption. If the compartment temperature measured with all controls set at their warmest setting is below the standardized temperature; then the result of this test alone will be used to determine energy consumption.

3.2.2 Alternatively, a first test may be performed with all temperature controls set at their warmest setting. If the compartment temperature is below the standardized temperature, then the result of this test alone will be used to determine energy consumption. If the above condition is not met, then the unit shall be tested in accordance with 3.2.1 above.

3.2.3 Alternatively, a first test may be performed with all temperature controls set at their coldest setting. If the compartment temperature is above the standardized temperature, a second test shall be performed with all controls set at their warmest setting and the results of these two tests shall be used to determine energy consumption. If

the above condition is not met, then the unit shall be tested in accordance with 3.2.1 above.

3.3 Variable defrost control optional test. After a steady-state condition is achieved, the door-opening sequence is initiated with an 18±2 second freezer door-opening occurring every eight hours to obtain three door-openings per 24-hour period. The first freezer door-opening shall occur at the initiation of the test period. The door(s) are to be opened 60 to 90°with an average velocity for the leading edge of the door of approximately two feet per second. Prior to the initiation of the door-opening sequence, the freezer defrost control mechanism may be re-initiated in order to minimize the test duration.

4. Test Period.

4.1 Test Period. Tests shall be performed by establishing the conditions set forth in Section 2 and using control settings as set forth in Section 3 above.

4.1.1 Nonautomatic Defrost. If the model being tested has no automatic defrost system, the test time period shall start after steady state conditions have been achieved, and be of not less than three hours' duration. During the test period the compressor motor shall complete two or more whole cycles (a compressor cycle is a complete ''on'' and a complete ''off'' period of the motor). If no ''off'' cycling will occur, as determined during the stabilization period, the test period shall be three hours. If incomplete cycling (less than two compressor cycles) occurs during a 24 hour period, the results of the 24 hour period shall be used.

4.1.2 Automatic Defrost. If the model being tested has an automatic defrost system, the test time period shall start after steady state conditions have been achieved and be from one point during a defrost period to the same point during the next defrost period. If the model being tested has a long-time automatic defrost system, the alternate provisions of 4.1.2.1 may be used. If the model being tested has a variable defrost control the provisions of 4.1.2.2. shall apply.

4.1.2.1 Long-time Automatic Defrost. If the model being tested has a long-time automatic defrost system, the test time period may consist of two parts. A first part would be the same as the test for a unit having no defrost provisions (section 4.1.1). The second part would start when a defrost period is initiated during a compressor ''on'' cycle and terminate at the second turn ''on'' of the compressor motor or after four hours, whichever comes first.

4.1.2.2 Variable defrost control. If the model being tested has a variable defrost control system, the test shall consist of three parts. Two parts shall be the same as the test for long-time automatic defrost in accordance with section 4.1.2.1 above. The third part is the optional test to determine the time between defrosts (5.2.1.3). The third part is used by manufacturers that choose not to accept the default value of F of 0.20, to calculate CT.

4.1.2.3 Variable defrost control optional test. After steady-state conditions with no door-openings are achieved in accordance with section 3.3 above, the test is continued using the above daily door-opening sequence until stabilized operation is achieved. Stabilization is defined as a minimum of three consecutive defrost cycles with times between defrost that will allow the calculation of a Mean Time Between Defrosts (MTBD1) that satisfies the statistical relationship of 90 percent confidence. The test is repeated on at least one more unit of the model and until the Mean Time Between Defrosts for the multiple unit test (MTBD2) satisfies the statistical relationship. If the time between defrosts is greater than 96 hours (compressor ''on'' time) and this defrost period can be repeated on a second unit, the test may be terminated at 96 hours (CT) and the absolute time value used for MTBD for each unit.

5. Test Measurements.

5.1 Temperature Measurements. Temperature measurements shall be made at the locations prescribed in Figure 7–2 of HRF–1–1979 and shall be accurate to within ±0.5 °F. (0.3 °C.) of true value.

5.1.1 Measured Temperature. The measured temperature is to be the average of all sensor temperature readings taken at a particular time. Measurements shall be taken at regular intervals not to exceed four minutes.

5.1.2 Compartment Temperature. The compartment temperature for each test period shall be an average of the measured temperatures taken during a complete cycle or several complete cycles of the compressor motor (one compressor cycle is one complete motor ''on'' and one complete motor ''off'' period). For long-time automatic defrost models, compartment temperature shall be that measured in the first part of the test period specified in 4.1.1. For models equipped with variable defrost controls, compartment temperatures shall be those measured in the first part of the test period specified in 4.1.2.2.

5.1.2.1 The number of complete compressor motor cycles over which the measured temperatures in a compartment are to be averaged to determine compartment temperature shall be equal to the number of minutes between measured temperature readings rounded up to the next whole minute or a number of complete cycles over a time period exceeding one hour. One of the cycles shall be the last complete compressor motor cycles during the test period.

5.1.2.2 If no compressor motor cycling occurs, the compartment temperature shall be the average of the measured temperatures

taken during the last thirty-two minutes of the test period.

5.1.2.3 If incomplete cycling occurs (less than one cycle) the compartment temperature shall be the average of all readings taken during the last three hours of the last complete ''on'' period.

5.2 Energy Measurements:

5.2.1 Per-day Energy Consumption. The energy consumption in kilowatt-hours per day for each test period shall be the energy expended during the test period as specified in section 4.1 adjusted to a 24 hour period.

The adjustment shall be determined as follows:

5.2.1.1 Nonautomatic and automatic defrost models. The energy consumption in kilowatt-hours per day shall be calculated equivalent to:

$ET=(EP\times 1440\times K)/T$ where

ET=test cycle energy expended in kilowatt-hours per day,
EP=energy expended in kilowatt-hours during the test period.
T=length of time of the test period in minutes,
1440=conversion factor to adjust to a 24 hour period in minutes per day, and
K=correction factor of 0.7 for chest freezers and 0.85 for upright freezers to adjust for average household usage, dimensionless.

5.2.1.2 Long-time Automatic Defrost. If the two part test method is used, the energy consumption in kilowatt-hours per day shall be calculated equivalent to:

$ET=(1440\times K\times EP1/T1) + ((EP2-(EP1\times T2/T1))\times K\times 12/CT)$

where

ET, 1440, and K are defined in 5.2.1.1
EP1=energy expended in kilowatt-hours during the first part of the test.
EP2=energy expended in kilowatt-hours during the second part of the test,
CT=Defrost timer run time in hours required to cause it to go through a complete cycle, to the nearest tenth hour per cycle,
12=conversion factor to adjust for a 50% run time of the compressor in hours per day, and
T1 and T2=length of time in minutes of the first and second test parts respectively.

5.2.1.3 Variable defrost control. The energy consumption in kilowatt-hours per day shall be calculated equivalent to:

$ET=(1440\times EP1/T1) + (EP2 - (EP1\times T2/T1)\times (12/CT)$ where 1440 is defined in 5.2.1.1 and EP1, EP2, T1, T2 and 12 are defined in 5.2.1.2.

$CT=(CT_L\times CT_M)/(F\text{x}\ (CT_M - CT_L) + CT_L)$

where:

CT_L=least or shortest time between defrost in tenths of an hour (greater than or equal to 6 hours but less than or equal to 12 hours, $6\leq_L\leq 12$)
CT_M=maximum time between defrost cycles in tenths of an hour (greater than CT_L but not more than 96 hours, $CT_L\leq CT_M\leq 96$)
F=ratio of per day energy consumption in excess of the least energy and the maximum difference in per day energy consumption and is equal to
$F=(1/CT - 1/CT_M)/(1/CT_L - 1/CT_M) = (ET - ET_L)/(ET_M - ET_L)$ or 0.20 in lieu of testing to find CT
ET_L=least electrical energy consumed, in kilowatt hours
ET_M=maximum electrical energy consumed, in kilowatt hours

For demand defrost models with no values for CT_L and CT_M in the algorithm the default values of 12 and 84 shall be used, respectively.

5.2.1.4 Variable defrost control optional test. Perform the optional test for variable defrost control models to find CT.

$CT=MTBD\times 0.5$

MTBD=mean time between defrost

$$MTBD=\frac{\sum X}{N}$$

X=time between defrost cycles
N=number of defrost cycles

5.3 Volume measurements. The total refrigerated volume, VT, shall be measured in accordance with HRF–1–1979, section 3.20 and section 5.1 through 5.3.

6. Calculation of Derived Results From Test Measurements.

6.1 Adjusted Total Volume. The adjusted total volume, VA, for freezers under test shall be defined as:

$VA=VT\times CF$

where

VA=adjusted total volume in cubic feet,
VT=total refrigerated volume in cubic feet, and
CF=Correction factor of 1.73, dimensionless.

6.2 Average Per Cycle Energy Consumption:

6.2.1 The average per-cycle energy consumption for a cycle type is expressed in kilowatt-hours per cycle to the nearest one hundredth (0.01) kilowatt-hour and shall depend upon the compartment temperature attainable as shown below.

6.2.1.1 If the compartment temperature is always below 0.0 °F. (−17.8 °C.), the average per-cycle energy consumption shall be equivalent to:

E=ET1

where
E=Total per-cycle energy consumption in kilowatt-hours per day.

ET is defined in 5.2.1, and

Number 1 indicates the test period during which the highest compartment temperature is measured.

6.2.1.2 If one of the compartment temperatures measured for a test period is greater than 0.0 °F. (17.8 °C.), the average per-cycle energy consumption shall be equivalent to:

$$E=ET1+((ET2-ET1)\times(0.0-TF1)/(TF2-TF1))$$

where

E is defined in 6.2.1.1

ET is defined in 5.2.1

TF=compartment temperature determined according to 5.1.2 in degrees F.

Numbers 1 and 2 indicate measurements taken during the first and second test period as appropriate, and

0.0=Standardized compartment temperature in degrees F.

[47 FR 34528, Aug. 10, 1982; 48 FR 13013, Mar. 29, 1983, as amended at 54 FR 36241, Aug. 31, 1989; 54 FR 38788, Sept. 20, 1989]

APPENDIX C TO SUBPART B OF PART 430—UNIFORM TEST METHOD FOR MEASURING THE ENERGY CONSUMPTION OF DISHWASHERS

The provisions of this Appendix C shall apply to products manufactured after September 29, 2003. The restriction on representations concerning energy use or efficiency in 42 U.S.C. 6293(c)(2) shall apply on February 25, 2004.

1. Definitions

1.1 *AHAM* means the Association of Home Appliance Manufacturers.

1.2 *Compact dishwasher* means a dishwasher that has a capacity of less than eight place settings plus six serving pieces as specified in ANSI/AHAM DW–1 (*see* §430.22), using the test load specified in section 2.7 of this Appendix.

1.3 *Cycle* means a sequence of operations of a dishwasher which performs a complete dishwashing function, and may include variations or combinations of washing, rinsing, and drying.

1.4 *Cycle type* means any complete sequence of operations capable of being preset on the dishwasher prior to the initiation of machine operation.

1.5 *Non-soil-sensing dishwasher* means a dishwasher that does not have the ability to adjust automatically any energy consuming aspect of a wash cycle based on the soil load of the dishes.

1.6 *Normal cycle* means the cycle type recommended by the manufacturer for completely washing a full load of normally soiled dishes including the power-dry feature.

1.7 *Power-dry feature* means the introduction of electrically generated heat into the washing chamber for the purpose of improving the drying performance of the dishwasher.

1.8 *Preconditioning cycle* means any cycle that includes a fill, circulation, and drain to ensure that the water lines and sump area of the pump are primed.

1.9 *Sensor heavy response* means, for standard dishwashers, the set of operations in a soil-sensing dishwasher for completely washing a load of dishes, four place settings of which are soiled according to ANSI/AHAM DW–1 (Incorporated by reference, *see* §430.22). For compact dishwashers, this definition is the same, except that two soiled place settings are used instead of four.

1.10 *Sensor light response* means, for both standard and compact dishwashers, the set of operations in a soil-sensing dishwasher for completely washing a load of dishes, one place setting of which is soiled with half of the gram weight of soils for each item specified in a single place setting according to ANSI/AHAM DW–1 (Incorporated by reference, *see* §430.22).

1.11 *Sensor medium response* means, for standard dishwashers, the set of operations in a soil-sensing dishwasher for completely washing a load of dishes, two place settings of which are soiled according to ANSI/AHAM DW–1 (Incorporated by reference, see §430.22). For compact dishwashers, this definition is the same, except that one soiled place setting is used instead of two.

1.12 *Soil-sensing dishwasher* means a dishwasher that has the ability to adjust any energy consuming aspect of a wash cycle based on the soil load of the dishes.

1.13 *Standard dishwasher* means a dishwasher that has a capacity equal to or greater than eight place settings plus six serving pieces as specified in ANSI/AHAM DW–1 (Incorporated by reference, see §430.22), using the test load specified in section 2.7 of this Appendix.

1.14 *Standby mode* means the lowest power consumption mode which cannot be switched off or influenced by the user and that may persist for an indefinite time when the dishwasher is connected to the main electricity supply and used in accordance with the manufacturer's instructions.

1.15 *Truncated normal cycle* means the normal cycle interrupted to eliminate the power-dry feature after the termination of the last rinse operation.

1.16 *Truncated sensor heavy response* means the sensor heavy response interrupted to eliminate the power-dry feature after the termination of the last rinse operation.

1.17 *Truncated sensor light response* means the sensor light response interrupted to eliminate the power-dry feature after the termination of the last rinse operation.

1.18 *Truncated sensor medium response* means the sensor medium response interrupted to eliminate the power-dry feature

after the termination of the last rinse operation.

1.19 *Water-heating dishwasher* means a dishwasher which, as recommended by the manufacturer, is designed for heating cold inlet water (nominal 50 °F) or designed for heating water with a nominal inlet temperature of 120 °F. Any dishwasher designated as water-heating (50 °F or 120 °F inlet water) must provide internal water heating to above 120 °F in at least one wash phase of the normal cycle.

2. Testing conditions:

2.1 *Installation Requirements.* Install the dishwasher according to the manufacturer's instructions. A standard or compact undercounter or under-sink dishwasher must be tested in a rectangular enclosure constructed of nominal 0.374 inch (9.5 mm) plywood painted black. The enclosure must consist of a top, a bottom, a back, and two sides. If the dishwasher includes a counter top as part of the appliance, omit the top of the enclosure. Bring the enclosure into the closest contact with the appliance that the configuration of the dishwasher will allow.

2.2 *Electrical energy supply.*

2.2.1 *Dishwashers that operate with an electrical supply of 115 volts.* Maintain the electrical supply to the dishwasher at 115 volts ±2 percent and within 1 percent of the nameplate frequency as specified by the manufacturer.

2.2.2 *Dishwashers that operate with an electrical supply of 240 volts.* Maintain the electrical supply to the dishwasher at 240 volts ±2 percent and within 1 percent of its nameplate frequency as specified by the manufacturer.

2.3 *Water temperature.* Measure the temperature of the water supplied to the dishwasher using a temperature measuring device as specified in section 3.1 of this Appendix.

2.3.1 *Dishwashers to be tested at a nominal 140 °F inlet water temperature.* Maintain the water supply temperature at 140° ±2 °F.

2.3.2 *Dishwashers to be tested at a nominal 120 °F inlet water temperature.* Maintain the water supply temperature at 120° ±2 °F.

2.3.3 *Dishwashers to be tested at a nominal 50 °F inlet water temperature.* Maintain the water supply temperature at 50° ±2 °F.

2.4 *Water pressure.* Using a water pressure gauge as specified in section 3.4 of this Appendix, maintain the pressure of the water supply at 35 ±2.5 pounds per square inch gauge (psig) when the water is flowing.

2.5 *Ambient and machine temperature.* Using a temperature measuring device as specified in section 3.1 of this Appendix, maintain the room ambient air temperature at 75° ±5 °F, and ensure that the dishwasher and the test load are at room ambient temperature at the start of each test cycle.

2.6 *Test Cycle and Load.*

2.6.1 *Non-soil-sensing dishwashers to be tested at a nominal inlet temperature of 140 °F.* These units must be tested on the normal cycle and truncated normal cycle without a test load if the dishwasher does not heat water in the normal cycle.

2.6.2 *Non-soil-sensing dishwashers to be tested at a nominal inlet temperature of 50 °F or 120 °F.* These units must be tested on the normal cycle with a clean load of eight place settings plus six serving pieces, as specified in section 2.7 of this Appendix. If the capacity of the dishwasher, as stated by the manufacturer, is less than eight place settings, then the test load must be the stated capacity.

2.6.3 *Soil-sensing dishwashers to be tested at a nominal inlet temperature of 50 °F, 120 °F, or 140 °F.* These units must be tested first for the sensor heavy response, then tested for the sensor medium response, and finally for the sensor light response with the following combinations of soiled and clean test loads.

2.6.3.1 For tests of the sensor heavy response, as defined in section 1.9 of this Appendix:

(A) For standard dishwashers, the test unit is to be loaded with a total of eight place settings plus six serving pieces as specified in section 2.7 of this Appendix. Four of the eight place settings must be soiled according to ANSI/AHAM DW–1 (Incorporated by reference, *see* § 430.22) while the remaining place settings, serving pieces, and all flatware are not soiled.

(B) For compact dishwashers, the test unit is to be loaded with four place settings plus six serving pieces as specified in section 2.7 of this Appendix. Two of the four place settings must be soiled according to ANSI/AHAM DW–1 (Incorporated by reference, *see* § 430.22) while the remaining place settings, serving pieces, and all flatware are not soiled.

2.6.3.2 For tests of the sensor medium response, as defined in section 1.11 of this Appendix:

(A) For standard dishwashers, the test unit is to be loaded with a total of eight place settings plus six serving pieces as specified in section 2.7 of this Appendix. Two of the eight place settings must be soiled according to ANSI/AHAM DW–1 (Incorporated by reference, *see* § 430.22) while the remaining place settings, serving pieces, and all flatware are not soiled.

(B) For compact dishwashers, the test unit is to be loaded with four place settings plus six serving pieces as specified in section 2.7 of this Appendix. One of the four place settings must be soiled according to ANSI/AHAM DW–1 (Incorporated by reference, *see* § 430.22) while the remaining place settings, serving pieces and all flatware are not soiled.

2.6.3.3 For tests of the sensor light response, as defined in section 1.10 of this Appendix:

(A) For standard dishwashers, the test unit is to be loaded with a total of eight place settings plus six serving pieces as specified in section 2.7 of this Appendix. One of the eight place settings must be soiled with half of the soil load specified for a single place setting according to ANSI/AHAM DW–1 (Incorporated by reference, *see* §430.22) while the remaining place settings, serving pieces, and all flatware are not soiled.

(B) For compact dishwashers, the test unit is to be loaded with four place settings plus six serving pieces as specified in section 2.7 of this Appendix. One of the four place settings must be soiled with half of the soil load specified for a single place setting according to the ANSI/AHAM DW–1 (Incorporated by reference, *see* §430.22) while the remaining place settings, serving pieces, and all flatware are not soiled.

2.7 *Test Load.*

Dishware/glassware/flatware item	Primary source	Description	Primary No.	Alternate source	Alternate source No.
Dinner Plate	Corning Comcor®/Corelle®.	10 inch Dinner Plate	6003893		
Bread and Butter Plate	Corning Comcor®/Corelle®.	6.75 inch Bread & Butter.	6003887	Arzberg	8500217100
Fruit Bowl	Corning Comcor®/Corelle®.	10 oz. Dessert Bowl	6003899	Arzberg	3820513100
Cup	Corning Comcor®/Corelle®.	8 oz. Ceramic Cup	6014162	Arzberg	3824732100
Saucer	Corning Comcor®/Corelle®.	6 inch Saucer	6010972	Arzberg	3824731100
Serving Bowl	Corning Comcor®/Corelle®.	1 qt. Serving Bowl	6003911		
Platter	Corning Comcor®/Corelle®.	9.5 inch Oval Platter	6011655		
Glass-Iced Tea	Libbey		551 HT		
Flatware—Knife	Oneida®—Accent		2619KPVF		
Flatware—Dinner Fork	Oneida®—Accent		2619FRSF		
Flatware—Salad Fork	Oneida®—Accent		2619FSLF		
Flatware—Teaspoon	Oneida®—Accent		2619STSF		
Flatware—Serving Fork.	Oneida®—Flight		2865FCM		
Flatware—Serving Spoon.	Oneida®—Accent		2619STBF		

2.8 *Detergent.* Use half the quantity of detergent specified according to ANSI/AHAM DW–1 (Incorporated by reference, *see* §430.22).

2.9 *Testing requirements.* Provisions in this Appendix pertaining to dishwashers that operate with a nominal inlet temperature of 50 °F or 120 °F apply only to water-heating dishwashers as defined in section 1.19 of this Appendix.

2.10 *Preconditioning requirements.* Precondition the dishwasher by establishing the testing conditions set forth in sections 2.1 through 2.5 of this Appendix. Set the dishwasher to the preconditioning cycle as defined in section 1.8 of this Appendix, without using a test load, and initiate the cycle.

3. *Instrumentation*

Test instruments must be calibrated annually.

3.1 *Temperature measuring device.* The device must have an error no greater than ±1 °F over the range being measured.

3.2 *Timer.* Time measurements for each monitoring period shall be accurate to within 2 seconds.

3.3 *Water meter.* The water meter must have a resolution of no larger than 0.1 gallons and a maximum error no greater than ±1.5 percent of the measured flow rate for all water temperatures encountered in the test cycle.

3.4 *Water pressure gauge.* The water pressure gauge must have a resolution of one pound per square inch (psi) and must have an error no greater than 5 percent of any measured value over the range of 35 ±2.5 psig.

3.5 *Watt-hour meter.* The watt-hour meter must have a resolution of 1 watt-hour or less and a maximum error of no more than 1 percent of the measured value for any demand greater than 50 watts.

3.6 *Standby wattmeter.* The standby wattmeter must have a resolution of 0.1 watt or less, a maximum error of no more than 1 percent of the measured value, and must be capable of operating within the stated tolerances for input voltages up to 5 percent total harmonic distortion. The standby wattmeter must be capable of operating at frequencies from 47 hertz through 63 hertz. Power measurements must have a crest factor of 3 or more at currents of 2 amps RMS or less.

3.7 *Standby watt-hour meter.* The standby watt-hour meter must meet all the requirements of the standby wattmeter and must accumulate watt-hours at a minimum power level of 20 milliwatts.

4. Test Cycle and Measurements

4.1 *Test cycle.* Perform a test cycle by establishing the testing conditions set forth in section 2 of this Appendix, setting the dishwasher to the cycle type to be tested, initiating the cycle, and allowing the cycle to proceed to completion.

4.2 *Machine electrical energy consumption.* Measure the machine electrical energy consumption, M, expressed as the number of kilowatt-hours of electricity consumed by the machine during the entire test cycle, using a water supply temperature as set forth in section 2.3 of this Appendix and using a watt-hour meter as specified in section 3.5 of this Appendix.

4.3 *Water consumption.* Measure the water consumption, V, expressed as the number of gallons of water delivered to the machine during the entire test cycle, using a water meter as specified in section 3.3 of this Appendix.

4.4 *Standby power.* Connect the dishwasher to a standby wattmeter or a standby watt-hour meter as specified in sections 3.6 and 3.7, respectively, of this Appendix. Select the conditions necessary to achieve operation in the standby mode as defined in section 1.14 of this Appendix. Monitor the power consumption but allow the dishwasher to stabilize for at least 5 minutes. Then monitor the power consumption for at least an additional 5 minutes. If the power level does not change by more than 5 percent from the maximum observed value during the later 5 minutes and there is no cyclic or pulsing behavior of the load, the load can be considered stable. For stable operation, standby power, S_m, can be recorded directly from the standby watt meter in watts or accumulated using the standby watt-hour meter over a period of at least 5 minutes. For unstable operation, the energy must be accumulated using the standby watt-hour meter over a period of at least 5 minutes and must capture the energy use over one or more complete cycles. Calculate the average standby power, S_m, expressed in watts by dividing the accumulated energy consumption by the duration of the measurement period.

5. Calculation of Derived Results From Test Measurements

5.1 *Machine energy consumption.*

5.1.1 *Machine energy consumption for non-soil-sensing electric dishwashers.* Take the value recorded in section 4.2 of this Appendix as the per-cycle machine electrical energy consumption. Express the value, M, in kilowatt-hours per cycle.

5.1.2 *Machine energy consumption for soil-sensing electric dishwashers.* The machine energy consumption for the sensor normal cycle, M, is defined as:

$$M = (M_{hr} \times F_{hr}) + (M_{mr} \times F_{mr}) + (M_{lr} \times F_{lr})$$

where,

M_{hr} = the value recorded in section 4.2 of this Appendix for the test of the sensor heavy response, expressed in kilowatt-hours per cycle,

M_{mr} = the value recorded in section 4.2 of this Appendix for the test of the sensor medium response, expressed in kilowatt-hours per cycle,

M_{lr} = the value recorded in section 4.2 of this Appendix for the test of the sensor light response, expressed in kilowatt-hours per cycle,

F_{hr} = the weighting factor based on consumer use of heavy response = 0.05,

F_{mr} = the weighting factor based on consumer use of medium response = 0.33,

F_{lr} = the weighting factor based on consumer use of light response = 0.62.

5.2 Drying energy.

5.2.1 *Drying energy consumption for non-soil-sensing electric dishwashers.* Calculate the amount of energy consumed using the power-dry feature after the termination of the last rinse option of the normal cycle. Express the value, E_D, in kilowatt-hours per cycle.

5.2.2 *Drying energy consumption for soil-sensing electric dishwashers.* The drying energy consumption, E_D, for the sensor normal cycle is defined as:

$$E_D = (E_{Dhr} + E_{Dmr} + E_{Dlr})/3$$

Where,

E_{Dhr} = energy consumed using the power-dry feature after the termination of the last rinse option of the sensor heavy response, expressed in kilowatt-hours per cycle,

E_{Dmr} = energy consumed using the power-dry feature after the termination of the last rinse option of the sensor medium response, expressed in kilowatt-hours per cycle,

E_{Dlr} = energy consumed using the power-dry feature after the termination of the last rinse option of the sensor light response, expressed in kilowatt-hours per cycle.

5.3 *Water consumption.*

5.3.1 *Water consumption for non-soil-sensing dishwashers using electrically heated, gas-heated, or oil-heated water.*

Take the value recorded in section 4.3 of this Appendix as the per-cycle water energy consumption. Express the value, V, in gallons per cycle.

5.3.2 *Water consumption for soil-sensing dishwashers using electrically heated, gas-heated, or oil-heated water.*

The water consumption for the sensor normal cycle, V, is defined as:

$$V = (V_{hr} \times F_{hr}) + (V_{mr} \times F_{mr}) + (V_{lr} \times F_{lr})$$

Where,

V_{hr} = the value recorded in section 4.3 of this Appendix for the test of the sensor heavy response, expressed in gallons per cycle,

V_{mr} = the value recorded in section 4.3 of this Appendix for the test of the sensor medium response, expressed in gallons per cycle,

V_{lr} = the value recorded in section 4.3 of this Appendix for the test of the sensor light response, expressed in gallons per cycle,
F_{hr} = the weighting factor based on consumer use of heavy response = 0.05,
F_{mr} = the weighting factor based on consumer use of medium response = 0.33,
F_{lr} = the weighting factor based on consumer use of light response = 0.62.

5.4 *Water energy consumption for non-soil-sensing or soil-sensing dishwashers using electrically heated water.*

5.4.1 *Dishwashers that operate with a nominal 140 °F inlet water temperature, only.* For the normal and truncated normal test cycle, calculate the water energy consumption, W, expressed in kilowatt-hours per cycle and defined as:

$W = V \times T \times K$

Where,

V = water consumption in gallons per cycle, as determined in section 5.3.1 of this Appendix,
T = nominal water heater temperature rise = 90 °F,
K = specific heat of water in kilowatt-hours per gallon per degree Fahrenheit = 0.0024.

5.4.2 *Dishwashers that operate with a nominal inlet water temperature of 120 °F.* For the normal and truncated normal test cycle, calculate the water energy consumption, W, expressed in kilowatt-hours per cycle and defined as:

$W = V \times T \times K$

Where,

V = water consumption in gallons per cycle, as determined in section 5.3.1 of this Appendix,
T = nominal water heater temperature rise = 70 °F,
K = specific heat of water in kilowatt-hours per gallon per degree Fahrenheit = 0.0024.

5.5 *Water energy consumption per cycle using gas-heated or oil-heated water.*

5.5.1 *Dishwashers that operate with a nominal 140 °F inlet water temperature, only.*

For each test cycle, calculate the water energy consumption using gas-heated or oil-heated water, W_g, expressed in Btu's per cycle and defined as:

$W_g = V \times T \times C/e$

Where,
V = reported water consumption in gallons per cycle, as determined in section 5.3.2 of this Appendix,
T = nominal water heater temperature rise = 90 °F,
C = specific heat of water in Btu's per gallon per degree Fahrenheit = 8.2,
e = nominal gas or oil water heater recovery efficiency = 0.75.

5.5.2 *Dishwashers that operate with a nominal inlet water temperature of 120 °F.* For each test cycle, calculate the water energy consumption using gas heated or oil heated water, W_g, expressed in Btu's per cycle and defined as:

$Wg = V \times T \times C/e$

Where,

V = reported water consumption in gallons per cycle, as determined in section 5.3.2 of this Appendix,
T = nominal water heater temperature rise = 70 °F,
C = specific heat of water in Btu's per gallon per degree Fahrenheit = 8.2,
e = nominal gas or oil water heater recovery efficiency = 0.75.

5.6 *Annual standby energy consumption.* Calculate the estimated annual standby energy consumption. First determine the number of standby hours per year, H_s, defined as:

$H_s = H - (N \times L)$.

Where,

H = the total number of hours per year = 8766 hours per year,
N = the representative average dishwasher use of 215 cycles per year,
L = the average of the duration of the normal cycle and truncated normal cycle, for non-soil-sensing dishwashers with a truncated normal cycle; the duration of the normal cycle, for non-soil-sensing dishwashers without a truncated normal cycle; the average duration of the sensor light response, truncated sensor light response, sensor medium response, truncated sensor medium response, sensor heavy response, and truncated sensor heavy response, for soil-sensing dishwashers with a truncated cycle option; the average duration of the sensor light response, sensor medium response, and sensor heavy response, for soil-sensing dishwashers without a truncated cycle option.

Then calculate the estimated annual standby power use, S, expressed in kilowatt-hours per year and defined as:

$S = S_m \times ((H_s)/1000)$

Where,

S_m = the average standby power in watts as determined in section 4.4 of this Appendix.

[68 FR 51900, Aug. 29, 2003]

APPENDIX D TO SUBPART B OF PART 430—UNIFORM TEST METHOD FOR MEASURING THE ENERGY CONSUMPTION OF CLOTHES DRYERS

1. Definitions

1.1 ''AHAM'' means the Association of Home Appliance Manufacturers.

1.2 ''Bone dry'' means a condition of a load of test clothes which has been dried in a dryer at maximum temperature for a minimum of 10 minutes, removed and weighed before cool down, and then dried again for 10-

minute periods until the final weight change of the load is 1 percent or less.

1.3 ''Compact'' or compact size'' means a clothes dryer with a drum capacity of less than 4.4 cubic feet.

1.4 ''Cool down'' means that portion of the clothes drying cycle when the added gas or electric heat is terminated and the clothes continue to tumble and dry within the drum.

1.5 ''Cycle'' means a sequence of operation of a clothes dryer which performs a clothes drying operation, and may include variations or combinations of the functions of heating, tumbling and drying.

1.6 ''Drum capacity'' means the volume of the drying drum in cubic feet.

1.7 ''HLD–1'' means the test standard promulgated by AHAM and titled ''AHAM Performance Evaluation Procedure for Household Tumble Type Clothes Dryers'', June 1974, and designated as HLD–1.

1.8 ''HLD–2EC'' means the test standard promulgated by AHAM and titled ''Test Method for Measuring Energy Consumption of Household Tumble Type Clothes Dryers,'' December 1975, and designated as HLD–2EC.

1.9 ''Standard size'' means a clothes dryer with a drum capacity of 4.4 cubic feet or greater.

1.10 ''Moisture content'' means the ratio of the weight of water contained by the test load to the bone-dry weight of the test load, expressed as a percent.

1.11 ''Automatic termination control'' means a dryer control system with a sensor which monitors either the dryer load temperature or its moisture content and with a controller which automatically terminates the drying process. A mark or detent which indicates a preferred automatic termination control setting must be present if the dryer is to be classified as having an ''automatic termination control.'' A mark is a visible single control setting on one or more dryer controls.

1.12 ''Temperature sensing control'' means a system which monitors dryer exhaust air temperature and automatically terminates the dryer cycle.

1.13 ''Moisture sensing control'' means a system which utilizes a moisture sensing element within the dryer drum that monitors the amount of moisture in the clothes and automatically terminates the dryer cycle.

2. Testing Conditions

2.1 *Installation*. Install the clothes dryer in accordance with manufacturer's instructions. The dryer exhaust shall be restricted by adding the AHAM exhaust simulator described in 3.3.5 of HLD–1. All external joints should be taped to avoid air leakage. Disconnect all console light or other lighting systems on the clothes dryer which do not consume more than 10 watts during the clothes dryer test cycle.

2.2 *Ambient temperature and humidity*. Maintain the room ambient air temperature at 75 ±3 °F and the room relative humidity at 50±10 percent relative humidity.

2.3 Energy supply.

2.3.1 *Electrical supply*. Maintain the electrical supply at the clothes dryer terminal block within 1 percent of 120/240 or 120/208Y or 120 volts as applicable to the particular terminal block wiring system and within 1 percent of the nameplate frequency as specified by the manufacturer. If the dryer has a dual voltage conversion capability, conduct test at the highest voltage specified by the manufacturer.

2.3.2 *Gas supply*.

2.3.2.1 *Natural gas*. Maintains the gas supply to the clothes dryer at a normal inlet test pressure immediately ahead of all controls at 7 to 10 inches of water column. If the clothes dryer is equipped with a gas appliance pressure regulator, the regulator outlet pressure at the normal test pressure shall be approximately that recommended by the manufacturer. The hourly Btu rating of the burner shall be maintained within ±5 percent of the rating specified by the manufacturer. The natural gas supplied should have a heating value of approximately 1,025 Btu's per standard cubic foot. The actual heating value, H_n2, in Btu's per standard cubic foot, for the natural gas to be used in the test shall be obtained either from measurements made by the manufacturer conducting the test using a standard continuous flow calorimeter as described in 2.4.6 or by the purchase of bottled natural gas whose Btu rating is certified to be at least as accurate a rating as could be obtained from measurements with a standard continuous flow calorimeter as described in 2.4.6.

2.3.2.2 *Propane gas*. Maintain the gas supply to the clothes dryer at a normal inlet test pressure immediately ahead of all controls at 11 to 13 inches of water column. If the clothes dryer is equipped with a gas appliance pressure regulator, the regulator outlet pressure at the normal test pressure shall be approximately that recommended by the manufacturer. The hourly Btu rating of the burner shall be maintained within ±5 percent of the rating specified by the manufacturer. The propane gas supplied should have a heating value of approximately 2,500 Btu's per standard cubic foot. The actual heating value, H_p, in Btu's per standard cubic foot, for the propane gas to be used in the test shall be obtained either from measurements made by the manufacturer conducting the test using a standard continuous flow calorimeter as described in 2.4.6 or by the purchase of bottled gas whose Btu rating is certified to be at least as accurate a rating as could be obtained from measurement with a standard continuous calorimeter as described in 2.4.6.

2.4 *Instrumentation*. Perform all test measurements using the following instruments as appropriate.

2.4.1 *Weighing scale for test cloth*. The scale shall have a range of 0 to a maximum of 30 pounds with a resolution of at least 0.2 ounces and a maximum error no greater than 0.3 percent of any measured value within the range of 3 to 15 pounds.

2.4.1.2 *Weighing scale for drum capacity measurements*. The scale should have a range of 0 to a maximum of 500 pounds with resolution of 0.50 pounds and a maximum error no greater than 0.5 percent of the measured value.

2.4.2 *Kilowatt-hour meter*. The kilowatt-hour meter shall have a resolution of 0.001 kilowatt-hours and a maximum error no greater than 0.5 percent of the measured value.

2.4.3 *Gas meter*. The gas meter shall have a resolution of 0.001 cubic feet and a maximum error no greater than 0.5 percent of the measured value.

2.4.4 *Dry and wet bulb psychrometer*. The dry and wet bulb psychrometer shall have an error no greater than ±1 °F.

2.4.5 *Temperature*. The temperature sensor shall have an error no greater than ±1 °F.

2.4.6 *Standard Continuous Flow Calorimeter*. The Calorimeter shall have an operating range of 750 to 3,500 Btu per cubic feet. The maximum error of the basic calorimeter shall be no greater than 0.2 percent of the actual heating value of the gas used in the test. The indicator readout shall have a maximum error no greater than 0.5 percent of the measured value within the operating range and a resolution of 0.2 percent of the full scale reading of the indicator instrument.

2.5 *Lint trap*. Clean the lint trap thoroughly before each test run.

2.6 *Test cloths*.

2.6.1 *Energy test cloth*. The energy test cloth shall be clean and consist of the following:

(a) Pure finished bleached cloth, made with a momie or granite weave, which is a blended fabric of 50 percent cotton and 50 percent polyester and weighs within +10 percent of 5.75 ounces per square yard after test cloth preconditioning and has 65 ends on the warp and 57 picks on the fill. The individual warp and fill yarns are a blend of 50 percent cotton and 50 percent polyester fibers.

(b) Cloth material that is 24 inches by 36 inches and has been hemmed to 22 inches by 34 inches before washing. The maximum shrinkage after five washes shall not be more than four percent on the length and width.

(c) The number of test runs on the same energy test cloth shall not exceed 25 runs.

2.6.2 *Energy stuffer cloths*. The energy stuffer cloths shall be made from energy test cloth material and shall consist of pieces of material that are 12 inches by 12 inches and have been hemmed to 10 inches by 10 inches before washing. The maximum shrinkage after five washes shall not be more than four percent on the length and width. The number of test runs on the same energy stuffer cloth shall not exceed 25 runs after test cloth preconditioning.

2.6.3 *Test Cloth Preconditioning*.

A new test cloth load and energy stuffer cloths shall be treated as follows:

(1) Bone dry the load to a weight change of ±1 percent, or less, as prescribed in Section 1.2.

(2) Place test cloth load in a standard clothes washer set at the maximum water fill level. Wash the load for 10 minutes in soft water (17 parts per million hardness or less), using 6.0 grams of AHAM Standard Test Detergent, IIA, per gallon of water. Wash water temperature is to controlled at 140°±5 °F (60°±2.7 °C). Rinse water temperature is to be controlled at 100°±5 °F (37.7±2.7 °C).

(3) Rinse the load again at the same water temperature.

(4) Bone dry the load as prescribed in Section 1.2 and weigh the load.

(5) This procedure is repeated until there is a weight change of one percent or less.

(6) A final cycle is to be a hot water wash with no detergent, followed by two warm water rinses.

2.7 *Test loads*.

2.7.1 *Compact size dryer load*. Prepare a bone-dry test load of energy cloths which weighs 3.00 pounds ±.03 pounds. Adjustments to the test load to achieve the proper weight can be made by the use of energy stuffer cloths, with no more than five stuffer cloths per load. Dampen the load by agitating it in water whose temperature is 100° ±5 °F and consists of 0 to 17 parts per million hardness for approximately two minutes in order to saturate the fabric. Then, extract water from the wet test load by spinning the load until the moisture content of the load is between 66.5 percent to 73.5 percent of the bone-dry weight of the test load.

2.7.2 *Standard size dryer load*. Prepare a bone-dry test load of energy cloths which weighs 7.00 pounds ±.07 pounds. Adjustments to the test load to achieve the proper weight can be made by the use of energy stuffer cloths, with no more than five stuffer cloths per load. Dampen the load by agitating it in water whose temperature is 100° ±5 °F and consists of 0 to 17 parts per million hardness for approximately two minutes in order to saturate the fabric. Then, extract water from the wet test load by spinning the load until the moisture content of the load is between 66.5 percent to 73.5 percent of the bone-dry weight of the test load.

2.7.3 *Method of loading*. Load the energy test cloths by grasping them in the center, shaking them to hang loosely and then dropping them in the dryer at random.

2.8 *Clothes dryer preconditioning*. Before any test cycle, operate the dryer without a test load in the non-heat mode for 15 minutes or until the discharge air temperature is varying less than 1 °F for 10 minutes, which ever is longer, in the test installation location with the ambient conditions within the specified rest condition tolerances of 2.2.

3. Test Procedures and Measurements

3.1 *Drum capacity*. Measure the drum capacity by sealing all openings in the drum except the loading port with a plastic bag, and ensure that all corners and depressions are filled and that there are no extrusions of the plastic bag through the opening in the drum. Support the dryer's rear drum surface on a platform scale to prevent deflection of the dryer, and record the weight of the empty dryer. Fill the drum with water to a level determined by the intersection of the door plane and the loading port. Record the temperature of the water and then the weight of the dryer with the added water and then determine the mass of the water in pounds. Add or subtract the appropriate volume depending on whether or not the plastic bag protrudes into the drum interior. The drum capacity is calculated as follows:

$C=w/d$

C= capacity in cubic feet.

w= weight of water in pounds.

d= density of water at the measured temperature in pounds per cubic feet.

3.2 *Dryer loading*. Load the dryer as specified in 2.7.

3.3 *Test cycle*. Operate the clothes dryer at the maximum temperature setting and, if equipped with a timer, at the maximum time setting and dry the test load until the moisture content of the test load is between 2.5 percent to 5.0 percent of the bone-dry weight of the test load, but do not permit the dryer to advance into cool down. If required, reset the timer or automatic dry control.

3.4 *Data recording*. Record for each test cycle:

3.4.1 Bone-dry weight of the test load described in 2.7.

3.4.2 Moisture content of the wet test load before the test, as described in 2.7.

3.4.3 Moisture content of the dry test load obtained after the test described in 3.3.

3.4.4 Test room conditions, temperature and percent relative humidity described in 2.2.

3.4.5 For electric dryers—the total kilowatt-hours of electric energy, E_t, consumed during the test described in 3.3.

3.4.6 For gas dryers:

3.4.6.1 Total kilowatt-hours of electrical energy, E_{te}, consumed during the test described in 3.3.

3.4.6.2 Cubic feet of gas per cycle, E_{tg}, consumed during the test described in 3.3.

3.4.6.3 On gas dryers using a continuously burning pilot light—the cubic feet of gas, E_{pg}, consumed by the gas pilot light in one hour.

3.4.6.4 Correct the gas heating value, GEF, as measured in 2.3.2.1 and 2.3.2.2, to standard pressure and temperature conditions in accordance with U.S. Bureau of Standards, circular C417, 1938. A sample calculation is illustrated in Appendix E of HLD–1.

3.5 *Test for automatic termination field use factor credits*. Credit for automatic termination can be claimed for those dryers which meet the requirements for either temperature-sensing control, 1.12, or moisture sensing control, 1.13, and having present the appropriate mark or detent feed defined in 1.11.

4. Calculation of Derived Results From Test Measurements

4.1 *Total per-cycle electric dryer energy consumption*. Calculate the total electric dryer energy consumption per cycle, E_{ce} expressed in kilowatt-hours per cycle and defined as:

$E_{ce}=[66/W_w-W_d)]\times E_{tt}\times FU$

E_t=the energy recorded in 3.4.5.

66=an experimentally established value for the percent reduction in the moisture content of the test load during a laboratory test cycle expressed as a percent.

FU=Field use factor.

=1.18 for time termination control systems.

=1.04 for automatic control systems which meet the requirements of the definitions for automatic termination controls in 1.11.1, 1.12 and 1.13.

W_w=the moisture content of the wet test load as recorded in 3.4.2.

W_d=the moisture content of the dry test load as recorded in 3.4.3.

4.2 *Per-cycle gas dryer electrical energy consumption*. Calculate the gas dryer electrical energy consumption per cycle, E_{ge}, expressed in kilowatt-hours per cycle and defined as:

$E_{GE}=[66/(W_w-W_d)]\times E_{te}\times FU$

E_{TE}=the energy recorded in 3.4.6.1

FU, 66, W_w, W_d as defined in 4.1

4.3 *Per-cycle gas dryer gas energy consumption*. Calculate the gas dryer gas energy consumption per cycle, $E_{ge.}$ expressed in Btu's per cycle as defined as:

$E_{GG}=[66/(W_w-W_d)]\times E_{tg}\times FU\times GEF$

E_{TG}=the energy recorded in 3.4.6.2

GEF=corrected gas heat value (Btu per cubic feet) as defined in 3.4.6.4

FU, 66, W_w W_d as defined in 4.1

4.4 *Per-cycle gas dryer continuously burning pilot light gas energy consumption*. Calculate the gas dryer continuously burning pilot light gas energy consumption per cycle, E_{up} expressed in Btu's per cycle and defined as:

$E_{up}=E_{pg}\times(8760-140/416)\times GEF$

E_{pg}=the energy recorded in 3.4.6.3

8760=number of hours in a year

416=representative average number of clothes dryer cycles in a year

140=estimated number of hours that the continuously burning pilot light is on during the operation of the clothes dryer for the representative average use cycle for clothes dryers (416 cycles per year)

GEF as defined in 4.3

4.5 *Total per-cycle gas dryer gas energy consumption expressed in Btu's.* Calculate the total gas dryer energy consumption per cycle, E_g, expressed in Btu's per cycle and defined as:

$E_g=E_{gg}+E_{up}$

E_{gg} as defined in 4.3

E_{up} as defined in 4.4

4.6 *Total per-cycle gas dryer energy consumption expressed in kilowatt-hours.* Calculate the total gas dryer energy consumption per cycle, E_{cg}, expressed in kilowatt-hours per cycle and defined as:

$E_{cg}=E_{ge}+(E_g/3412\ Btu/k\ Wh)$

E_{ge} as defined in 4.2

E_g as defined in 4.5

[46 FR 27326, May 19, 1981]

APPENDIX E TO SUBPART B OF PART 430—UNIFORM TEST METHOD FOR MEASURING THE ENERGY CONSUMPTION OF WATER HEATERS

1. Definitions

1.1 *Cut-in* means the time when or water temperature at which a water heater control or thermostat acts to increase the energy or fuel input to the heating elements, compressor, or burner.

1.2 *Cut-out* means the time when or water temperature at which a water heater control or thermostat acts to reduce to a minimum the energy or fuel input to the heating elements, compressor, or burner.

1.3 *Design Power Rating* means the nominal power rating that a water heater manufacturer assigns to a particular design of water heater, expressed in kilowatts or Btu (kJ) per hour as appropriate.

1.4 *Energy Factor* means a measure of water heater overall efficiency.

1.5 *First-Hour Rating* means an estimate of the maximum volume of ''hot'' water that a storage-type water heater can supply within an hour that begins with the water heater fully heated (i.e., with all thermostats satisfied). It is a function of both the storage volume and the recovery rate.

1.6 *Heat Trap* means a device which can be integrally connected or independently attached to the hot and/or cold water pipe connections of a water heater such that the device will develop a thermal or mechanical seal to minimize the recirculation of water due to thermal convection between the water heater tank and its connecting pipes.

1.7 *Instantaneous Water Heaters*

1.7.1 *Electric Instantaneous Water Heater* Reserved.

1.7.2 *Gas Instantaneous Water Heater* means a water heater that uses gas as the energy source, initiates heating based on sensing water flow, is designed to deliver water at a controlled temperature of less than 180 °F (82 °C), has an input greater than 50,000 Btu/h (53 MJ/h) but less than 200,000 Btu/h (210 MJ/h), and has a manufacturer's specified storage capacity of less than 2 gallons (7.6 liters). The unit may use a fixed or variable burner input.

1.8 *Maximum gpm (L/min) Rating* means the maximum gallons per minute (liters per minute) of hot water that can be supplied by an instantaneous water heater while maintaining a nominal temperature rise of 77 °F (42.8 °C) during steady state operation.

1.9 *Rated Storage Volume* means the water storage capacity of a water heater, in gallons (liters), as specified by the manufacturer.

1.10 *Recovery Efficiency* means the ratio of energy delivered to the water to the energy content of the fuel consumed by the water heater.

1.11 *Standby* means the time during which water is not being withdrawn from the water heater. There are two standby time intervals used within this test procedure: $\tau_{stby,1}$ represents the elapsed time between the time at which the maximum mean tank temperature is observed after the sixth draw and subsequent recovery and the end of the 24-hour test; $\tau_{stby,2}$ represents the total time during the 24-hour simulated use test when water is not being withdrawn from the water heater.

1.12 *Storage-type Water Heaters*

1.12.1 *Electric Storage-type Water Heater* means a water heater that uses electricity as the energy source, is designed to heat and store water at a thermostatically controlled temperature of less than 180 °F (82 °C), has a nominal input of 12 kilowatts (40,956 Btu/h) or less, and has a rated storage capacity of not less than 20 gallons (76 liters) nor more than 120 gallons (450 liters).

1.12.2 *Gas Storage-type Water Heater* means a water heater that uses gas as the energy source, is designed to heat and store water at a thermostatically controlled temperature of less than 180 °F (82 °C), has a nominal input of 75,000 Btu (79 MJ) per hour or less, and has a rated storage capacity of not less than 20 gallons (76 liters) nor more than 100 gallons (380 liters).

1.12.3 *Heat Pump Water Heater* means a water heater that uses electricity as the energy source, is designed to heat and store water at a thermostatically controlled temperature of less than 180 °F (82 °C), has a maximum current rating of 24 amperes (including the compressor and all auxiliary equipment such as fans, pumps, controls, and, if on the same circuit, any resistive elements) for an input voltage of 250 volts or

less, and, if the tank is supplied, has a manufacturer's rated storage capacity of 120 gallons (450 liters) or less. Resistive elements used to provide supplemental heating may use the same circuit as the compressor if (1) an interlocking mechanism prevents concurrent compressor operation and resistive heating or (2) concurrent operation does not result in the maximum current rating of 24 amperes being exceeded. Otherwise, the resistive elements and the heat pump components must use separate circuits. A heat pump water heater may be sold by the manufacturer with or without a storage tank.

a. Heat Pump Water Heater with Storage Tank means an air-to-water heat pump sold by the manufacturer with an insulated storage tank as a packaged unit. The tank and heat pump can be an integral unit or they can be separated.

b. Heat Pump Water Heater without Storage Tank (also called Add-on Heat Pump Water Heater) means an air-to-water heat pump designed for use with a storage-type water heater or a storage tank that is not specified or supplied by the manufacturer.

1.12.4 *Oil Storage-type Water Heater* means a water heater that uses oil as the energy source, is designed to heat and store water at a thermostatically controlled temperature of less than 180 °F (82 °C), has a nominal energy input of 105,000 Btu/h (110 MJ/h) or less, and has a manufacturer's rated storage capacity of 50 gallons (190 liters) or less.

1.12.5 *Storage-type Water Heater of More than 2 Gallons (7.6 Liters) and Less than 20 Gallons (76 Liters)*. Reserved.

1.13 *ASHRAE Standard 41.1–86* means the standard published in 1986 by the American Society of Heating, Refrigerating and Air-Conditioning Engineers, Inc., and titled Standard Measurement Guide: Section on Temperature Measurements.

1.14 *ASTM–D–2156–80* means the test standard published in 1980 by the American Society for Testing and Measurements and titled ''Smoke Density in Flue Gases from Burning Distillate Fuels, Test Method for''.

1.15 *Symbol Usage* The following identity relationships are provided to help clarify the symbology used throughout this procedure:

C_p specific heat capacity of water

E_{annual} annual energy consumption of a water heater

E_f energy factor of a water heater

F_{hr} first-hour rating of a storage-type water heater

F_{max} maximum gpm (L/min) rating of an instantaneous water heater rated at a temperature rise of 77 °F (42.8 °C) across the heater

i a subscript to indicate an ith draw during a test

M_i mass of water removed during the ith draw (i=1 to 6) of the 24-hr simulated use test

M^*_i for storage-type water heaters, mass of water removed during the ith draw (i=1 to n) during the first-hour rating test

M_{10m} for instantaneous water heaters, mass of water removed continuously during a 10-minute interval in the maximum gpm (L/min) rating test

n for storage-type water heaters, total number of draws during the first-hour rating test

Q total fossil fuel and/or electric energy consumed during the entire 24-hr simulated use test

Q_d daily water heating energy consumption adjusted for net change in internal energy

Q_{da} adjusted daily water heating energy consumption with adjustment for variation of tank to ambient air temperature difference from nominal value

Q_{dm} overall adjusted daily water heating energy consumption including Q_{da} and Q_{HWD}

Q_{hr} hourly standby losses

Q_{HW} daily energy consumption to heat water over the measured average temperature rise across the water heater

Q_{HWD} adjustment to daily energy consumption, Q_{hw}, due to variation of the temperature rise across the water heater not equal to the nominal value of 77 °F (42.8 °C)

Q_r energy consumption of fossil fuel or heat pump water heaters between thermostat (or burner) cut-out prior to the first draw and cut-out following the first draw of the 24-hr simulated use test

$Q_{r,\ max}$ energy consumption of a modulating instantaneous water heater between cut-out (burner) prior to the first draw and cut-out following the first draw of the 24-hr simulated use test

$Q_{r,\ min}$ energy consumption of a modulating instantaneous water heater from immediately prior to the fourth draw to burner cut-out following the fourth draw of the 24-hr simulated use test

Q_{stby} total energy consumed by the water heater during the standby time interval $\tau_{stby,\ 1}$

Q_{su} total fossil fueled and/or electric energy consumed from the beginning of the first draw to the thermostat (or burner) cut-out following the completion of the sixth draw during the 24-hr simulated use test

T_{min} for modulating instantaneous water heaters, steady state outlet water temperature at the minimum fuel input rate

$\bar{T}_0$ mean tank temperature at the beginning of the 24-hr simulated use test

$\bar{T}_{24}$ mean tank temperature at the end of the 24-hr simulated use test

$\bar{T}_{a,\ stby}$ average ambient air temperature during standby periods of the 24-hr use test

$\bar{T}_{del}$ for instantaneous water heaters, average outlet water temperature during a 10-minute continuous draw interval in the maximum gpm (L/min) rating test

$\bar{T}_{del,\ i}$ average outlet water temperature during the *i*th draw of the 24-hr simulated use test

$\bar{T}_{in}$ for instantaneous water heaters, average inlet water temperature during a 10-minute continuous draw interval in the maximum gpm (L/min) rating test

$\bar{T}_{in,\ i}$ average inlet water temperature during the *i*th draw of the 24-hr simulated use test

$\bar{T}_{max,\ 1}$ maximum measured mean tank temperature after cut-out following the first draw of the 24-hr simulated use test

$\bar{T}_{stby}$ average storage tank temperature during the standby period $\tau_{stby,\ 2}$ of the 24-hr use test

$\bar{T}_{su}$ maximum measured mean tank temperature after cut-out following the sixth draw of the 24-hr simulated use test

$\bar{T}_{t,\ stby}$ average storage tank temperature during the standby period τ_{stby}, 1 of the 24-hr use test

$\bar{T}^*_{del,\ i}$ for storage-type water heaters, average outlet water temperature during the *i*th draw (i=1 to n) of the first-hour rating test

$T^*_{max,\ i}$ for storage-type water heaters, maximum outlet water temperature observed during the *i*th draw (i=1 to n) of the first-hour rating test

$T^*_{min,\ i}$ for storage-type water heaters, minimum outlet water temperature to terminate the *i*th draw during the first-hour rating test

UA standby loss coefficient of a storage-type water heater

V_i volume of water removed during the *i*th draw (i=1 to 6) of the 24-hr simulated use test

V^*_i volume of water removed during the *i*th draw (i=1 to n) during the first-hour rating test

V_{10m} for instantaneous water heaters, volume of water removed continuously during a 10-minute interval in the maximum gpm (L/min) rating test

V_{max} steady state water flow rate of an instantaneous water heater at the rated input to give a discharge temperature of 135 °F ±5 °F (57.2 °C ±2.8 °C)

V_{min} steady state water flow rate of a modulating instantaneous water heater at the minimum input to give a discharge temperature of T_{min} up to 135 °F ±5 °F (57.2 °C ±2.8 °C)

V_{st} measured storage volume of the storage tank

W_f weight of storage tank when completely filled with water

W_t tare weight of storage tank when completely empty of water

η_r recovery efficiency

ρ density of water

$\tau_{stby,\ 1}$ elapsed time between the time the maximum mean tank temperature is observed after the sixth draw and the end of the 24-hr simulated use test

$\tau_{stby,\ 2}$ overall standby periods when no water is withdrawn during the 24-hr simulated use test

1.16 *Tabletop water heater* means a water heater in a rectangular box enclosure designed to slide into a kitchen countertop space with typical dimensions of 36 inches high, 25 inches deep and 24 inches wide.

2. Test Conditions

2.1 *Installation Requirements*. Tests shall be performed with the water heater and instrumentation installed in accordance with Section 4 of this appendix.

2.2 *Ambient Air Temperature*. The ambient air temperature shall be maintained between 65.0 °F and 70.0 °F (18.3 °C and 21.1 °C) on a continuous basis. For heat pump water heaters, the dry bulb temperature shall be maintained at 67.5 °F ±1 °F (19.7 °C ±0.6 °C) and, in addition, the relative humidity shall be maintained between 49% and 51%.

2.3 *Supply Water Temperature*. The temperature of the water being supplied to the water heater shall be maintained at 58 °F ±2 °F (14.4 °C ±1.1 °C) throughout the test.

2.4 *Storage Tank Temperature*. The average temperature of the water within the storage tank shall be set to 135 °F ±5 °F (57.2 °C ±2.8 °C).

2.5 *Supply Water Pressure*. During the test when water is not being withdrawn, the supply pressure shall be maintained between 40 psig (275 kPa) and the maximum allowable pressure specified by the water heater manufacturer.

2.6 *Electrical and/or Fossil Fuel Supply*.

2.6.1 *Electrical*. Maintain the electrical supply voltage to within ±1% of the center of the voltage range specified by the water heater and/or heat pump manufacturer.

2.6.2 *Natural Gas*. Maintain the supply pressure in accordance with the manufacturer's specifications. If the supply pressure is not specified, maintain a supply pressure of 7–10 inches of water column (1.7–2.5 kPa). If the water heater is equipped with a gas appliance pressure regulator, the regulator outlet pressure shall be within ±10% of the manufacturer's specified manifold pressure. For all tests, use natural gas having a heating value of approximately 1,025 Btu per standard cubic foot (38,190 kJ per standard cubic meter).

2.6.3 *Propane Gas*. Maintain the supply pressure in accordance with the manufacturer's specifications. If the supply pressure is not specified, maintain a supply pressure of 11–13 inches of water column (2.7–3.2 kPa). If the water heater is equipped with a gas appliance pressure regulator, the regulator outlet pressure shall be within ±10% of the manufacturer's specified manifold pressure. For all tests, use propane gas with a heating value of approximately 2,500 Btu per standard cubic foot (93,147 kJ per standard cubic meter).

2.6.4 *Fuel Oil Supply*. Maintain an uninterrupted supply of fuel oil. Use fuel oil having a heating value of approximately 138,700 Btu per gallon (38,660 kJ per liter).

3. Instrumentation

3.1 *Pressure Measurements*. Pressure-measuring instruments shall have an error no greater than the following values:

Item measured	Instrument accuracy	Instrument precision
Gas pressure	±0.1 inch of water column (±0.025 kPa)	±0.05 inch of water column (±0.012 kPa).
Atmospheric pressure	±0.1 inch of mercury column (±0.34 kPa)	±0.05 inch of mercury column (±0.17 kPa).
Water pressure	±1.0 pounds per square inch (±6.9 kPa)	±0.50 pounds per square inch (±3.45 kPa).

3.2 *Temperature Measurement*

3.2.1 *Measurement*. Temperature measurements shall be made in accordance with the Standard Measurement Guide: Section on Temperature Measurements, ASHRAE Standard 41.1–86.

3.2.2 *Accuracy and Precision*. The accuracy and precision of the instruments, including their associated readout devices, shall be within the following limits:

Item measured	Instrument accuracy	Instrument precision
Air dry bulb temperature	±0.2 °F (±0.1 °C)	±0.1 °F (±0.06 °C)
Air wet bulb temperature	±0.2 °F (±0.1 °C)	±0.1 °F (±0.06 °C)
Inlet and outlet water temperatures	±0.2 °F (±0.1 °C)	±0.1 °F (±0.06 °C)
Storage tank temperatures	±0.5 °F (±0.3 °C)	±0.25 °F (±0.14 °C)

3.2.3 *Scale Division*. In no case shall the smallest scale division of the instrument or instrument system exceed 2 times the specified precision.

3.2.4 *Temperature Difference*. Temperature difference between the entering and leaving water may be measured with any of the following:

a. A thermopile
b. Calibrated resistance thermometers
c. Precision thermometers
d. Calibrated thermistors
e. Calibrated thermocouples
f. Quartz thermometers

3.2.5 *Thermopile Construction*. If a thermopile is used, it shall be made from calibrated thermocouple wire taken from a single spool. Extension wires to the recording device shall also be made from that same spool.

3.2.6 *Time Constant*. The time constant of the instruments used to measure the inlet and outlet water temperatures shall be no greater than 5 seconds.

3.3 *Liquid Flow Rate Measurement*. The accuracy of the liquid flow rate measurement, using the calibration if furnished, shall be equal to or less than ±1% of the measured value in mass units per unit time.

3.4 *Electric Energy*. The electrical energy used shall be measured with an instrument and associated readout device that is accurate within ±1% of the reading.

3.5 *Fossil Fuels*. The quantity of fuel used by the water heater shall be measured with an instrument and associated readout device that is accurate within ±1% of the reading.

3.6 *Mass Measurements*. For mass measurements greater than or equal to 10 pounds (4.5 kg), a scale that is accurate within ±1% of the reading shall be used to make the measurement. For mass measurements less than 10 pounds (4.5 kg), the scale shall provide a measurement that is accurate within ±0.1 pound (0.045 kg).

3.7 *Heating Value*. The higher heating value of the natural gas, propane, or fuel oil shall be measured with an instrument and associated readout device that is accurate within ±1% of the reading. The heating value of natural gas and propane must be corrected for local temperature and pressure conditions.

3.8 *Time*. The elapsed time measurements shall be measured with an instrument that is accurate within ±0.5 seconds per hour.

3.9 *Volume*. Volume measurements shall be measured with an accuracy of ±2% of the total volume.

4. Installation

4.1 *Water Heater Mounting*. A water heater designed to be freestanding shall be placed on a ¾ inch (2 cm) thick plywood platform supported by three 2 × 4 inch (5 cm × 10 cm) runners. If the water heater is not approved for installation on combustible flooring, suitable non-combustible material shall be placed between the water heater and the platform. Counter-top water heaters shall be placed against a simulated wall section. Wall-mounted water heaters shall be supported on a simulated wall in accordance

with the manufacturer-published installation instructions. When a simulated wall is used, the recommended construction is 2 × 4 inch (5 cm × 10 cm) studs, faced with ¾ inch (2 cm) plywood. For heat pump water heaters that are supplied with a storage tank, the two components, if not delivered as a single package, shall be connected in accordance with the manufacturer-published installation instructions and the overall system shall be placed on the above-described plywood platform. If installation instructions are not provided by the heat pump manufacturer, uninsulated 8 foot (2.4 m) long connecting hoses having an inside diameter of ⅝ inch (1.6 cm) shall be used to connect the storage tank and the heat pump water heater. With the exception of using the storage tank described in 4.10, the same requirements shall apply for heat pump water heaters that are supplied without a storage tank from the manufacturer. The testing of the water heater shall occur in an area that is protected from drafts.

4.2 *Water Supply*. Connect the water heater to a water supply capable of delivering water at conditions as specified in Sections 2.3 and 2.5 of this appendix.

4.3 *Water Inlet and Outlet Configuration*. For freestanding water heaters that are taller than 36 inches (91.4 cm), inlet and outlet piping connections shall be configured in a manner consistent with Figures 1 and 2. Inlet and outlet piping connections for wall-mounted water heaters shall be consistent with Figure 3. For freestanding water heaters that are 36 inches or less in height and not supplied as part of a counter-top enclosure (commonly referred to as an under-the-counter model), inlet and outlet piping shall be installed in a manner consistent with Figures 4, 5, and 6. For water heaters that are supplied with a counter-top enclosure, inlet and outlet piping shall be made in a manner consistent with Figures 7A and 7B, respectively. The vertical piping noted in Figures 7A and 7B shall be located (whether inside the enclosure or along the outside in a recessed channel) in accordance with the manufacturer-published installation instructions.

All dimensions noted in Figures 1 through 7 shall be achieved. All piping between the water heater and the inlet and outlet temperature sensors, noted as T_{IN} and T_{OUT} in the figures, shall be Type ''L'' hard copper having the same diameter as the connections on the water heater. Unions may be used to facilitate installation and removal of the piping arrangements. A pressure gauge and diaphragm expansion tank shall be installed in the supply water piping at a location upstream of the inlet temperature sensor. An appropriately rated pressure and temperature relief valve shall be installed on all water heaters at the port specified by the manufacturer. Discharge piping for the relief valve shall be non-metallic. If heat traps, piping insulation, or pressure relief valve insulation are supplied with the water heater, they shall be installed for testing. Except when using a simulated wall, clearance shall be provided such that none of the piping contacts other surfaces in the test room.

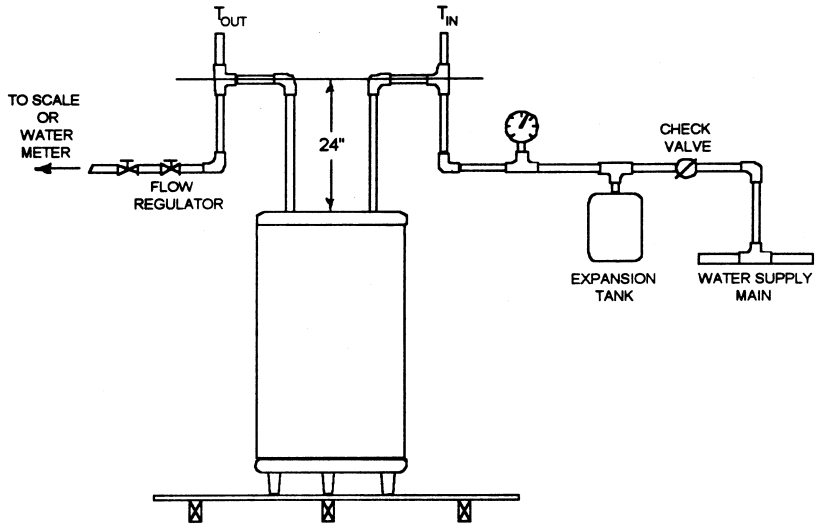

Figure 1.

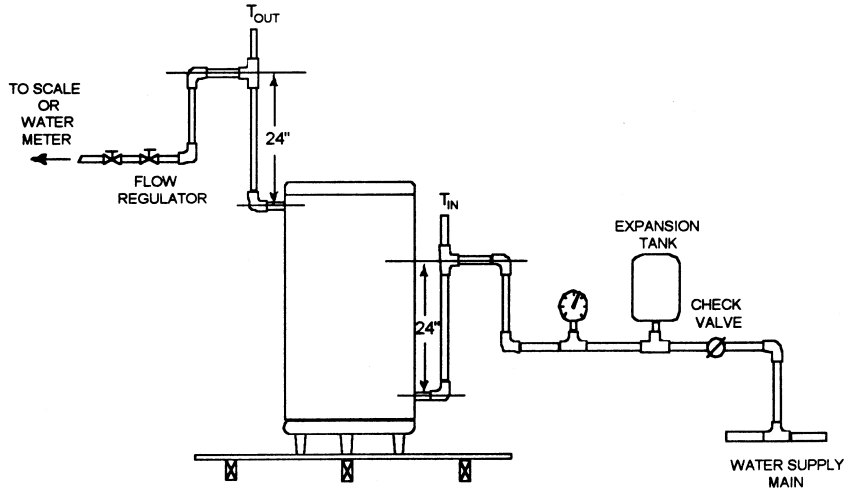

Figure 2.

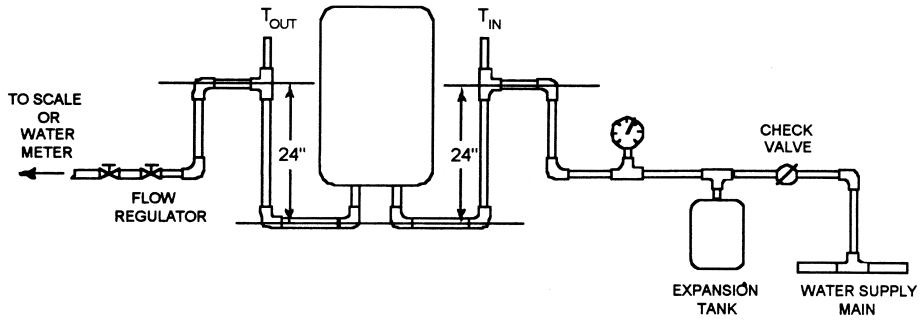

Figure 3.

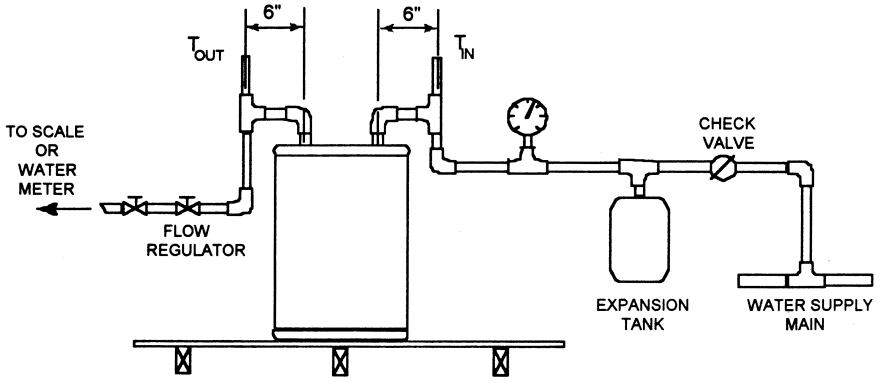

Figure 4.

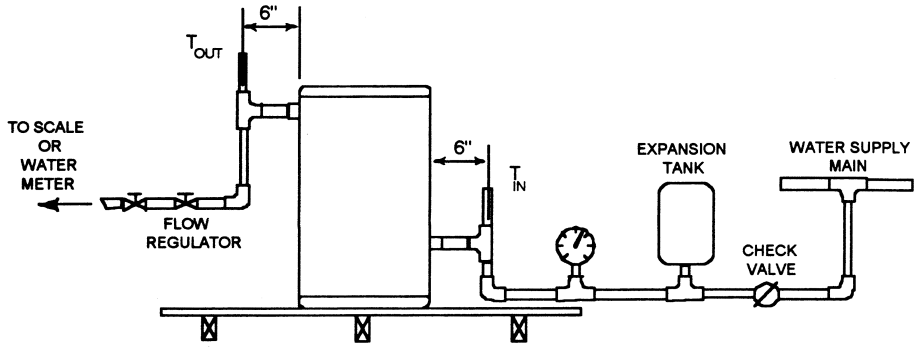

Figure 5.

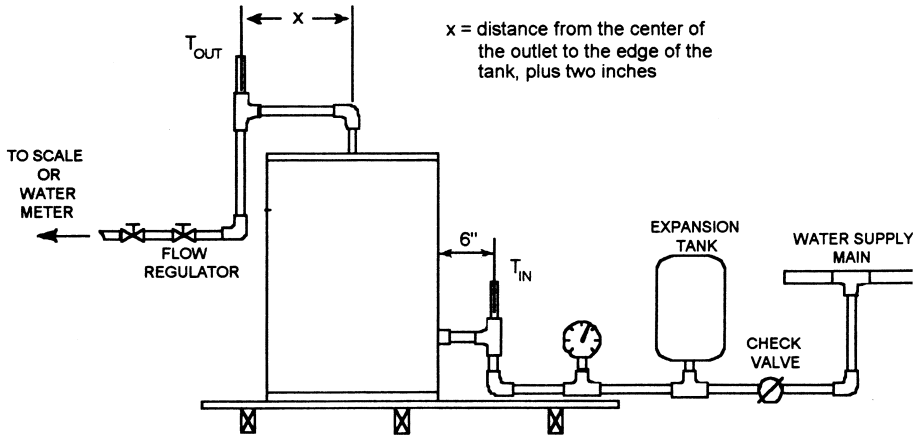

Figure 6.

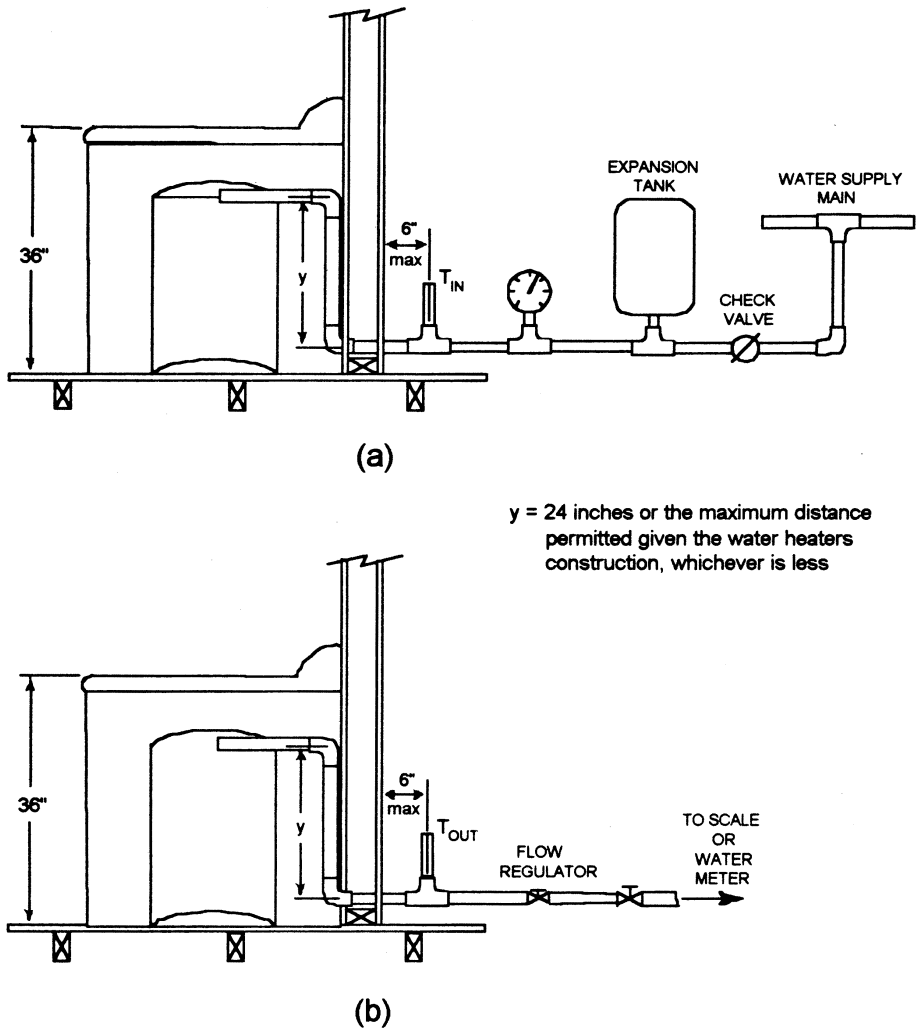

Figure 7.

4.4 *Fuel and/or Electrical Power and Energy Consumption.* Install one or more instruments which measure, as appropriate, the quantity and rate of electrical energy and/or fossil fuel consumption in accordance with Section 3. For heat pump water heaters that use supplemental resistive heating, the electrical energy supplied to the resistive element(s) shall be metered separately from the electrical energy supplied to the entire appliance or to the remaining components (e.g., compressor, fans, pumps, controls).

4.5 *Internal Storage Tank Temperature Measurements.* Install six temperature measurement sensors inside the water heater tank with a vertical distance of at least 4 inches (100 mm) between successive sensors. A temperature sensor shall be positioned at the vertical midpoint of each of the six equal

volume nodes within the tank. Nodes designate the equal volumes used to evenly partition the total volume of the tank. As much as is possible, the temperature sensor should be positioned away from any heating elements, anodic protective devices, tank walls, and flue pipe walls. If the tank cannot accommodate six temperature sensors and meet the installation requirements specified above, install the maximum number of sensors which comply with the installation requirements. The temperature sensors shall be installed either through (1) the anodic device opening; (2) the relief valve opening; or (3) the hot water outlet. If installed through the relief valve opening or the hot water outlet, a tee fitting or outlet piping, as applicable, shall be installed as close as possible to its original location. If the relief valve temperature sensor is relocated, and it no longer extends into the top of the tank, a substitute relief valve that has a sensing element that can reach into the tank shall be installed. If the hot water outlet includes a heat trap, the heat trap shall be installed on top of the tee fitting. Added fittings shall be covered with thermal insulation having an R value between 4 and 8 $h \div ft^{2} \div$ °F/Btu (0.7 and 1.4 $m^{2} \div$ °C/W).

4.6 *Ambient Air Temperature Measurement.* Install an ambient air temperature sensor at the vertical mid-point of the water heater and approximately 2 feet (610 mm) from the surface of the water heater. The sensor shall be shielded against radiation.

4.7 *Inlet and Outlet Water Temperature Measurements.* Install temperature sensors in the cold-water inlet pipe and hot-water outlet pipe as shown in Figures 1, 2, 3, 4, 5, 6, 7a and 7b, as applicable.

4.8 *Flow Control.* A valve shall be installed to provide flow as specified in sections 5.1.4.1 for storage tank water heaters and 5.2.1 for instantaneous water heaters.

4.9 *Flue Requirements.*

4.9.1 *Gas-Fired Water Heaters.* Establish a natural draft in the following manner. For gas-fired water heaters with a vertically discharging draft hood outlet, a 5-foot (1.5-meter) vertical vent pipe extension with a diameter equal to the largest flue collar size of the draft hood shall be connected to the draft hood outlet. For gas-fired water heaters with a horizontally discharging draft hood outlet, a 90-degree elbow with a diameter equal to the largest flue collar size of the draft hood shall be connected to the draft hood outlet. A 5-foot (1.5-meter) length of vent pipe shall be connected to the elbow and oriented to discharge vertically upward. Direct vent gas-fired water heaters shall be installed with venting equipment specified in the manufacturer's instructions using the minimum vertical and horizontal lengths of vent pipe recommended by the manufacturer.

4.9.2 *Oil-Fired Water Heaters.* Establish a draft at the flue collar at the value specified in the manufacturer's instructions. Establish the draft by using a sufficient length of vent pipe connected to the water heater flue outlet, and directed vertically upward. For an oil-fired water heater with a horizontally discharging draft hood outlet, a 90-degree elbow with a diameter equal to the largest flue collar size of the draft hood shall be connected to the draft hood outlet. A length of vent pipe sufficient to establish the draft shall be connected to the elbow fitting and oriented to discharge vertically upward. Direct-vent oil-fired water heaters should be installed with venting equipment as specified in the manufacturer's instructions, using the minimum vertical and horizontal lengths of vent pipe recommended by the manufacturer.

4.10 *Heat Pump Water Heater Storage Tank.* The tank to be used for testing a heat pump water heater without a tank supplied by the manufacturer (see Section 1.12.3b) shall be an electric storage-type water heater having a measured volume of 47.0 gallons ±1.0 gallon (178 liters ±3.8 liters); two 4.5 kW heating elements controlled in such a manner as to prevent both elements from operating simultaneously; and an energy factor greater than or equal to the minimum energy conservation standard (as determined in accordance with Section 6.1.7) and less than or equal to the sum of the minimum energy conservation standard and 0.02.

5. Test Procedures

5.1 *Storage-type Water Heaters, Including Heat Pump Water Heaters.*

5.1.1 *Determination of Storage Tank Volume.* Determine the storage capacity, V_{st}, of the water heater under test, in gallons (liters), by subtracting the tare weight—measured while the tank is empty—from the gross weight of the storage tank when completely filled with water (with all air eliminated and line pressure applied as described in section 2.5) and dividing the resulting net weight by the density of water at the measured temperature.

5.1.2 *Setting the Thermostat.*

5.1.2.1 *Single Thermostat Tanks.* Starting with a tank at the supply water temperature, initiate normal operation of the water heater. After cut-out, determine the mean tank temperature every minute until the maximum value is observed. Determine whether this maximum value for the mean tank temperature is within the range of 135 °F±5 °F (57.2 °C±2.8 °C). If not, turn off the water heater, adjust the thermostat, drain and refill the tank with supply water. Then, once again, initiate normal operation of the water heater, and determine the maximum mean tank temperature after cut-out. Repeat this sequence until the maximum mean

tank temperature after cut-out is 135 °F±5 °F (57.2 °C±2.8 °C).

5.1.2.2 *Tanks with Two or More Thermostats.* Follow the same sequence as for a single thermostat tank, i.e. start at the supply water temperature, operate normally until cutout. Determine if the thermostat that controls the uppermost heating element yields a maximum water temperature of 135 °F±5 °F (57.2 °C±2.8 °C), as measured by the in-tank sensors that are positioned above the uppermost heating element. If the tank temperature at the thermostat is not within 135 °F±5 °F (57.2 °C±2.8 °C), turn off the water heater, adjust the thermostat, drain and refill the tank with supply water. The thermostat that controls the heating element positioned next highest in the tank shall then be set to yield a maximum water temperature of 135 °F±5 °F (57.2 °C±2.8 °C). This process shall be repeated until the thermostat controlling the lowest element is correctly adjusted. When adjusting the thermostat that controls the lowest element, the maximum mean tank temperature after cut-out, as determined using all the in-tank sensors, shall be 135 °F±5 °F (57.2 °C±2.8 °C). When adjusting all other thermostats, use only the in-tank temperature sensors positioned above the heating element in question to evaluate the maximum water temperature after cut-out.

For heat pump water heaters that control an auxiliary resistive element, the thermostat shall be set in accordance with the manufacturer's installation instructions.

5.1.3 *Power Input Determination.* For all water heaters except electric types having immersed heating elements, initiate normal operation and determine the power input, P, to the main burners (including pilot light power, if any) after 15 minutes of operation. If the water heater is equipped with a gas appliance pressure regulator, the regulator outlet pressure shall be set within ±10% of that recommended by the manufacturer. For oil-fired water heaters the fuel pump pressure shall be within ±10% of the manufacturer's specified pump pressure. All burners shall be adjusted to achieve an hourly Btu (kJ) rating that is within ±2% of the value specified by the manufacturer. For an oil-fired water heater, adjust the burner to give a CO_2 reading recommended by the manufacturer and an hourly Btu (kJ) rating that is within ±2% of that specified by the manufacturer. Smoke in the flue may not exceed No. 1 smoke as measured by the procedure in ASTM–D–2156–80.

5.1.4 *First-Hour Rating Test.*

5.1.4.1 *General.* During hot water draws, remove water at a rate of 3.0±0.25 gallons per minute (11.4±0.95 liters per minute). Collect the water in a container that is large enough to hold the volume removed during an individual draw and suitable for weighing at the termination of each draw. Alternatively, a water meter may be used to directly measure the water volume(s) withdrawn.

5.1.4.2 *Draw Initiation Criteria.* Begin the first-hour rating test by imposing a draw on the storage-type water heater. After completion of this first draw, initiate successive draws based on the following criteria. For gas-and oil-fired water heaters, initiate successive draws when the thermostat acts to reduce the supply of fuel to the main burner. For electric water heaters having a single element or multiple elements that all operate simultaneously, initiate successive draws when the thermostat acts to reduce the electrical input supplied to the element(s). For electric water heaters having two or more elements that do not operate simultaneously, initiate successive draws when the applicable thermostat acts to reduce the electrical input to the element located vertically highest in the storage tank. For heat pump waters heaters that do not use supplemental resistive heating, initiate successive draws immediately after the electrical input to the compressor is reduced by the action of the water heater's thermostat. For heat pump waters heaters that use supplemental resistive heating, initiate successive draws immediately after the electrical input to the compressor or the uppermost resistive element is reduced by the action of the applicable water heater thermostat. This draw initiation criterion for heat pump water heaters that use supplemental resistive heating, however, shall only apply when the water located above the thermostat at cut-out is heated to 135 °F±5 °F (57.2 °C±2.8 °C).

5.1.4.3 *Test Sequence.* Establish normal water heater operation. If the water heater is not presently operating, initiate a draw. The draw may be terminated anytime after cut-in occurs. After cut-out occurs (i.e., all thermostats are satisfied), monitor the internal storage tank temperature sensors described in section 4.5 every minute.

Initiate a draw after a maximum mean tank temperature has been observed following cut-out. Record the time when the draw is initiated and designate it as an elapsed time of zero ($\tau^* = 0$). (The superscript * is used to denote variables pertaining to the first-hour rating test.) Record the outlet water temperature beginning 15 seconds after the draw is initiated and at 5-second intervals thereafter until the draw is terminated. Determine the maximum outlet temperature that occurs during this first draw and record it as $T^*_{max,\ 1}$. For the duration of this first draw and all successive draws, in addition, monitor the inlet temperature to the water heater to ensure that the required 58 °F±2 °F (14.4 °C±1.1 °C) test condition is met. Terminate the hot water draw when the outlet temperature decreases to $T^*_{max,1} - 25$ °F ($T^*_{max,1} - 13.9$ °C). Record this temperature as

$T^*_{min,1}$. Following draw termination, determine the average outlet water temperature and the mass or volume removed during this first draw and record them as $\bar{T}^*_{del,1}$ and M^*_1 or V^*_1, respectively.

Initiate a second and, if applicable, successive draw each time the applicable draw initiation criteria described in section 5.1.4.2 are satisfied. As required for the first draw, record the outlet water temperature 15 seconds after initiating each draw and at 5-second intervals thereafter until the draw is terminated. Determine the maximum outlet temperature that occurs during each draw and record it as $T^*_{max,\ i}$, where the subscript i refers to the draw number. Terminate each hot water draw when the outlet temperature decreases to $T^*_{max,\ i}-25$ °F ($T^*_{max,\ i}-13.9$ °C). Record this temperature as $T^*_{min,\ i}$. Calculate and record the average outlet temperature and the mass or volume removed during each draw ($\bar{T}^*_{del,\ i}$ and M^*_i or V^*_i, respectively). Continue this sequence of draw and recovery until one hour has elapsed, then shut off the electrical power and/or fuel supplied to the water heater.

If a draw is occurring at an elapsed time of one hour, continue this draw until the outlet temperature decreases to $T^*_{max,\ n}-25$ °F ($T^*_{max,\ n}-13.9$ °C), at which time the draw shall be immediately terminated. (The subscript n shall be used to denote quantities associated with the final draw.) If a draw is not occurring at an elapsed time of one hour, a final draw shall be imposed at one hour. This draw shall be immediately terminated when the outlet temperature first indicates a value less than or equal to the cut-off temperature used for the previous draw ($T^*_{min,\ n}-1$). For cases where the outlet temperature is close to $T^*_{min,\ n}-1$, the final draw shall proceed for a minimum of 30 seconds. If an outlet temperature greater than $T^*_{min,\ n}-1$ is not measured within 30 seconds, the draw shall be immediately terminated and zero additional credit shall be given towards first-hour rating (i.e., $M^*_n = 0$ or $V^*_n = 0$). After the final draw is terminated, calculate and record the average outlet temperature and the mass or volume removed during the draw ($\bar{T}^*_{del,\ n}$ and M^*_n or V^*_n, respectively).

5.1.5 *24-Hour Simulated Use Test.* During the simulated use test, a total of 64.±3 1.0 gallons (243±3.8 liters) shall be removed. This value is referred to as the daily hot water usage in the following text.

With the water heater turned off, fill the water heater with supply water and apply pressure as described in section 2.5. Turn on the water heater and associated heat pump unit, if present. After the cut-out occurs, the water heater may be operated for up to three cycles of drawing until cut-in, and then operating until cut-out, prior to the start of the test.

At this time, record the mean tank temperature ($\bar{T}_o$), and the electrical and/or fuel measurement readings, as appropriate. Begin the 24-hour simulated use test by withdrawing a volume from the water heater that equals one-sixth of the daily hot water usage. Record the time when this first draw is initiated and assign it as the test elapsed time (τ) of zero (0). Record the average storage tank and ambient temperature every 15 minutes throughout the 24-hour simulated use test unless a recovery or a draw is occurring. At elapsed time intervals of one, two, three, four, and five hours from $\tau = 0$, initiate additional draws, removing an amount of water equivalent to one-sixth of the daily hot water usage with the maximum allowable deviation for any single draw being ±0.5 gallons (1.9 liters). The quantity of water withdrawn during the sixth draw shall be increased or decreased as necessary such that the total volume of water withdrawn equals 64.3 gallons ±1.0 gallon (243.4 liters ±3.8 liters).

All draws during the simulated use test shall be made at flow rates of 3.0 gallons ±0.25 gallons per minute (11.4 liters ±0.95 liters per minute). Measurements of the inlet and outlet temperatures shall be made 15 seconds after the draw is initiated and at every subsequent 5-second interval throughout the duration of each draw. The arithmetic mean of the hot water discharge temperature and the cold water inlet temperature shall be determined for each draw ($\bar{T}_{del,\ i}$ and $\bar{T}_{in,\ i}$). Determine and record the net mass or volume removed (M_i or V_i), as appropriate, after each draw.

At the end of the recovery period following the first draw, record the maximum mean tank temperature observed after cut-out, $\bar{T}_{max,\ 1}$, and the energy consumed by an electric resistance, gas or oil-fired water heater, Q_r. For heat pump water heaters, the total electrical energy consumed during the first recovery by the heat pump (including compressor, fan, controls, pump, etc.) and, if applicable, by the resistive element(s) shall be recorded as Q_r.

At the end of the recovery period that follows the sixth draw, determine and record the total electrical energy and/or fossil fuel consumed since the beginning of the test, Q_{su}. In preparation for determining the energy consumed during standby, record the reading given on the electrical energy (watt-hour) meter, the gas meter, and/or the scale used to determine oil consumption, as appropriate. Record the maximum value of the mean tank temperature after cut-out as $\bar{T}_{su}$. Except as noted below, allow the water heater to remain in the standby mode until 24 hours have elapsed from the start of the test (i.e., since = 0). Prevent the water heater from beginning a recovery cycle during the last hour of the test by turning off the electric power to the electrical heating elements and heat pump, if present, or by turning down the fuel supply to the main burner at

an elapsed time of 23 hours. If a recovery is taking place at an elapsed time of 23 hours, wait until the recovery is complete before reducing the electrical and/or fuel supply to the water heater. At 24 hours, record the mean tank temperature, $\bar{T}_{24}$, and the electric and/or fuel instrument readings. Determine the total fossil fuel or electrical energy consumption, as appropriate, for the entire 24-hour simulated use test, Q. Record the time interval between the time at which the maximum mean tank temperature is observed after the sixth draw and the end of the 24-hour test as $_{stby,\ 1}$. Record the time during which water is not being withdrawn from the water heater during the entire 24-hour period as $_{stby,\ 2}$.

5.2 *Instantaneous Gas and Electric Water Heaters*

5.2.1 *Setting the Outlet Discharge Temperature.* Initiate normal operation of the water heater at the full input rating for electric instantaneous water heaters and at the maximum firing rate specified by the manufacturer for gas instantaneous water heaters. Monitor the discharge water temperature and set to a value of 135 °F ±5 °F (57.2 °C ±2.8 °C) in accordance with the manufacturer's instructions. If the water heater is not capable of providing this discharge temperature when the flow rate is 3.0 gallons ±0.25 gallons per minute (11.4 liters ±0.95 liters per minute), then adjust the flow rate as necessary to achieve the specified discharge water temperature. Record the corresponding flow rate as V_{max}.

5.2.2 *Additional Requirements for Variable Input Instantaneous Gas Water Heaters.* If the instantaneous water heater incorporates a controller that permits operation at a reduced input rate, adjust the flow rate as necessary to achieve a discharge water temperature of 135 °F ±5 °F (57.2 °C ±2.8 °C) while maintaining the minimum input rate. Record the corresponding flow rate as V_{min}. If an outlet temperature of 135 °F ±5 °F (57.2 °C ±2.8 °C) cannot be achieved at the minimum flow rate permitted by the instantaneous water heater, record the flow rate as V_{min} and the corresponding outlet temperature as T_{min}.

5.2.3 *Maximum GPM Rating Test for Instantaneous Water Heaters.* Establish normal water heater operation at the full input rate for electric instantaneous water heaters and at the maximum firing rate for gas instantaneous water heaters with the discharge water temperature set in accordance with Section 5.2.1. During the 10-minute test, either collect the withdrawn water for later measurement of the total mass removed, or alternatively, use a water meter to directly measure the water volume removed.

After recording the scale or water meter reading, initiate water flow throughout the water heater, record the inlet and outlet water temperatures beginning 15 seconds after the start of the test and at subsequent 5-second intervals throughout the duration of the test. At the end of 10 minutes, turn off the water. Determine the mass of water collected, M_{10m}, in pounds (kilograms), or the volume of water, V_{10m}, in gallons (liters).

5.2.4 *24-hour Simulated Use Test for Gas Instantaneous Water Heaters.*

5.2.4.1 *Fixed Input Instantaneous Water Heaters.* Establish normal operation with the discharge water temperature and flow rate set to values of 135 °F ±5 °F (57.2 °C ±2.8 °C) and V_{max} per Section 5.2.1, respectively. With no draw occurring, record the reading given by the gas meter and/or the electrical energy meter as appropriate. Begin the 24-hour simulated use test by drawing an amount of water out of the water heater equivalent to one-sixth of the daily hot water usage. Record the time when this first draw is initiated and designate it as an elapsed time, τ, of 0. At elapsed time intervals of one, two, three, four, and five hours from $\tau = 0$, initiate additional draws, removing an amount of water equivalent to one-sixth of the daily hot water usage, with the maximum allowable deviation for any single draw being ±0.5 gallons (1.9 liters). The quantity of water drawn during the sixth draw shall be increased or decreased as necessary such that the total volume of water withdrawn equals 64.3 gallons ±1.0 gallons (243.4 liters ±3.8 liters).

Measurements of the inlet and outlet water temperatures shall be made 15 seconds after the draw is initiated and at every 5-second interval thereafter throughout the duration of the draw. The arithmetic mean of the hot water discharge temperature and the cold water inlet temperature shall be determined for each draw. Record the scale used to measure the mass of the withdrawn water or the water meter reading, as appropriate, after each draw. At the end of the recovery period following the first draw, determine and record the fossil fuel or electrical energy consumed, Q_r. Following the sixth draw and subsequent recovery, allow the water heater to remain in the standby mode until exactly 24 hours have elapsed since the start of the test (i.e., since $\tau = 0$). At 24 hours, record the reading given by the gas meter and/or the electrical energy meter as appropriate. Determine the fossil fuel or electrical energy consumed during the entire 24-hour simulated use test and designate the quantity as Q.

5.2.4.2 *Variable Input Instantaneous Water Heaters.* If the instantaneous water heater incorporates a controller that permits continuous operation at a reduced input rate, the first three draws shall be conducted using the maximum flow rate, V_{max}, while removing an amount of water equivalent to one-sixth of the daily hot water usage, with the maximum allowable deviation for any one of the three draws being ±0.5 gallons (1.9 liters).

The second three draws shall be conducted at V_{min}. If an outlet temperature of 135 °F ±5 °F (57.2 °C ±2.8 °C) could not be achieved at the minimum flow rate permitted by the instantaneous water heater, the last three draws should be lengthened such that the volume removed is:

$$V_{4,5,6} = \frac{64.3\ \text{gal}}{6} \times \left[\frac{77°\text{F}}{(T_{min} - 58°\text{F})} \right]$$

or

$$V_{4,5,6} = \frac{243\ \text{L}}{6} \times \left[\frac{42.8°\text{C}}{(T_{min} - 14.4°\text{C})} \right]$$

where T_{min} is the outlet water temperature at the flow rate V_{min} as determined in Section 5.2.1, and where the maximum allowable variation for any one of the three draws is ±0.5 gallons (1.9 liters). The quantity of water withdrawn during the sixth draw shall be increased or decreased as necessary such that the total volume of water withdrawn equals $(32.15 + 3 \div V_{4,5,6})$ ±1.0 gallons

$((121.7 + 3 \div V_{4,5,6})$ ±3.8 liters).

Measurements of the inlet and outlet water temperatures shall be made 5 seconds after a draw is initiated and at every 5-second interval thereafter throughout the duration of the draw. Determine the arithmetic mean of the hot water discharge temperature and the cold water inlet temperature for each draw. Record the scale used to measure the mass of the withdrawn water or the water meter reading, as appropriate, after each draw. At the end of the recovery period following the first draw, determine and record the fossil fuel or electrical energy consumed, $Q_{r,\ max}$. Likewise, record the reading of the meter used to measure fossil fuel or electrical energy consumption prior to the fourth draw and at the end of the recovery period following the fourth draw, and designate the difference as $Q_{r,min}$. Following the sixth draw and subsequent recovery, allow the water heater to remain in the standby mode until exactly 24 hours have elapsed since the start of the test (i.e., since τ=0). At 24 hours, record the reading given by the gas meter and/or the electrical energy meter, as appropriate. Determine the fossil fuel or electrical energy consumed during the entire 24-hour simulated use test and designate the quantity as Q.

6. Computations

6.1 *Storage Tank and Heat Pump Water Heaters.*

6.1.1 *Storage Tank Capacity.* The storage tank capacity is computed using the following:

$$V_{st} = \frac{(W_f - W_t)}{\rho}$$

Where:

V_{st} = the storage capacity of the water heater, gal (L).

W_f = the weight of the storage tank when completely filled with water, lb (kg).

W_t = the (tare) weight of the storage tank when completely empty, lb (kg).

ρ = the density of water used to fill the tank measured at the temperature of the water, lb/gal (kg/L).

6.1.2. *First-Hour Rating Computation.* For the case in which the final draw is initiated at or prior to an elapsed time of one hour, the first-hour rating shall be computed using,

$$F_{hr} = \sum_{i=1}^{n} V_i^*$$

Where:

n = the number of draws that are completed during the first-hour rating test.

V^*_i = the volume of water removed during the *ith* draw of the first-hour rating test, gal (L)

or, if the mass of water is being measured,

$$V_i^* = \frac{M_i^*}{\rho}$$

Where:

M^*_i = the mass of water removed during the ith draw of the first-hour rating test, lb (kg).

ρ = the water density corresponding to the average outlet temperature measured during the *ith* draw, ($\bar{T}^*_{del,\ i}$), lb/gal (kg/L).

For the case in which a draw is not in progress at the elapsed time of one hour and a final draw is imposed at the elapsed time of one hour, the first-hour rating shall be calculated using

$$F_{hr} = \sum_{i=1}^{n-1} V_i^* + V_n^* \left(\frac{\bar{T}^*_{del,\ n} - T^*_{min,\ n-1}}{\bar{T}^*_{del,\ n-1} - T^*_{min,\ n-1}} \right)$$

where *n* and V^*_i are the same quantities as defined above, and

V^*_n = the volume of water drawn during the nth (final) draw of the first-hour rating test, gal (L)

$\bar{T}^*_{del,n-1}$ = the average water outlet temperature measured during the *(n−1)*th draw of the first-hour rating test, °F (°C).

$\bar{T}^*_{del,n}$ = the average water outlet temperature measured during the *n*th (final) draw of the first-hour rating test, °F (°C).

$\bar{T}^*_{min,n-1}$ = the minimum water outlet temperature measured during the $(n-1)$th draw of the first-hour rating test, °F (°C).

6.1.3 *Recovery Efficiency*. The recovery efficiency for gas, oil, and heat pump storage-type water heaters is computed as:

$$\eta_r = \frac{M_1 C_{p1}\left(\overline{T}_{del,1} - \overline{T}_{in,1}\right)}{Q_r} + \frac{V_{st}\rho_2 C_{p2}\left(\overline{T}_{max,1} - \overline{T}_o\right)}{Q_r}$$

Where:

M_1 = total mass removed during the first draw of the 24-hour simulated use test, lb (kg), or, if the volume of water is being measured,

$M_1 = V_1 \rho_1$

Where:

V_1 = total volume removed during the first draw of the 24-hour simulated use test, gal (L).

ρ_1 = density of the water at the water temperature measured at the point where the flow volume is measured, lb/gal (kg/L).

C_{p1} = specific heat of the withdrawn water, $(\bar{T}_{del,1} + \bar{T}_{in,1})$ 2, Btu/lb °F (kJ/kg °C).

$\bar{T}_{del,1}$ = average water outlet temperature measured during the first draw of the 24-hour simulated use test, °F (°C).

$\bar{T}_{in,1}$ = average water inlet temperature measured during the first draw of the 24-hour simulated use test, °F (°C).

V_{st} = as defined in section 6.1.1.

ρ_2 = density of stored hot water, $(\bar{T}_{max,1} + \bar{T}_o)/2$, lb/gal (kg/L).

C_{p2} = specific heat of stored hot water evaluated at $(\bar{T}_{max,1} + \bar{T}_o)$ / 2, Btu/lb °F (kJ/kg$_2$ °C).

$\bar{T}_{max,1}$ = maximum mean tank temperature recorded after cut-out following the first draw of the 24-hour simulated use test, °F (°C).

$\bar{T}_o$ = maximum mean tank temperature recorded prior to the first draw of the 24-hour simulated use test, °F (°C).

Q_r = the total energy used by the water heater between cut-out prior to the first draw and cut-out following the first draw, including auxiliary energy such as pilot lights, pumps, fans, etc., Btu (kJ). (Electrical auxiliary energy shall be converted to thermal energy using the following conversion: 1 kWh = 3,412 Btu.)

The recovery efficiency for electric water heaters with immersed heating elements is assumed to be 98%.

6.1.4 *Hourly Standby Losses*. The hourly standby energy losses are computed as:

$$Q_{hr} = \frac{Q_{stby} - \dfrac{V_{st}\rho C_p\left(\overline{T}_{24} - \overline{T}_{su}\right)}{\eta_r}}{\tau_{stby,1}}$$

Where:

Q_{hr} = the hourly standby energy losses of the water heater, Btu/h (kJ/h).

Q_{stby} = the total energy consumed by the water heater between the time at which the maximum mean tank temperature is observed after the sixth draw and the end of the 24-hour test period, Btu (kJ).

V_{st} = as defined in section 6.1.1.

ρ = density of stored hot water, $(\bar{T}_{24} + \bar{T}_{su})$ / 2, lb/gal (kg/L).

C_p = specific heat of the stored water, $(\bar{T}_{24} + \bar{T}_{su})$ / 2, Btu/lb÷°F (kJ/kg÷°C).

$\bar{T}_{24}$ = the mean tank temperature at the end of the 24-hour simulated use test, °F (°C).

$\bar{T}_{su}$ = the maximum mean tank temperature observed after the sixth draw, °F (°C).

η_r = as defined in section 6.1.3.

$\tau_{stby,\ 1}$ = elapsed time between the time at which the maximum mean tank temperature is observed after the sixth draw and the end of the 24-hour simulated use test, h.

The standby heat loss coefficient for the tank is computed as:

$$UA = \frac{Q_{hr}}{\overline{T}_{t,\,stby,1} - \overline{T}_{a,\,stby,1}}$$

Where:

UA = standby heat loss coefficient of the storage tank, Btu/h÷°F (kJ/h÷°C).

Q_{hr} = as defined in this section.

$\bar{T}_{t,\ stby,1}$= overall average storage tank temperature between the time when the maximum mean tank temperature is observed after the sixth draw and the end of the 24-hour simulated use test, °F (°C).

$\bar{T}_{a,\ stby,1}$= overall average ambient temperature between the time when the maximum mean tank temperature is observed after the sixth draw and the end of the 24-hour simulated use test, °F (°C).

6.1.5 *Daily Water Heating Energy Consumption*. The daily water heating energy consumption, Q_d, is computed as:

$$Q_d = Q - \frac{V_{st}\rho C_p\left(\overline{T}_{24} - \overline{T}_o\right)}{\eta_r}$$

Where:

Q = total energy used by the water heater during the 24-hour simulated use test including auxiliary energy such as pilot lights, pumps, fans, etc., Btu (kJ). (Electrical auxiliary energy shall be converted to thermal energy using the following conversion: 1 kWh = 3,412 Btu.)

V_{st} = as defined in section 6.1.1.

ρ= density of the stored hot water, $(\bar{T}_{24} + \bar{T}_o) / 2$, lb/gal (kg/L).

C_p = specific heat of the stored water, $(\bar{T}_{24} + \bar{T}_o) / 2$, Btu/lb÷°F (kJ/kg÷°C).

$\bar{T}_{24}$ = mean tank temperature at the end of the 24-hour simulated use test, °F (°C).

$\bar{T}_o$ = mean tank temperature at the beginning of the 24-hour simulated use test, recorded one minute before the first draw is initiated, °F (°C).

η_r = as defined in section 6.1.3.

6.1.6 *Adjusted Daily Water Heating Energy Consumption*. The adjusted daily water heating energy consumption, Q_{da}, takes into account that the temperature difference between the storage tank and surrounding ambient air may not be the nominal value of 67.5 °F (135 °F–67.5 °F) or 37.5 °C (57.2 °C–19.7 °C) due to the 10 °F (5.6 °C) allowable variation in storage tank temperature, 135 °F ±5 °F (57.2 °C ±2.8 °C), and the 5 °F (2.8 °C) allowable variation in surrounding ambient temperature 65 °F (18.3 °C) to 70 °F (21.1 °C). The adjusted daily water heating energy consumption is computed as:

$Q_{da} = Q_D - [(\bar{T}_{stby,\ 2} - \bar{T}_{a,\ stby,2}) - (135\ °F - 67.5\ °F)]\ UA\tau_{stby,\ 2}$

or $Q_{da} = Q_D - [(\bar{T}_{stby,\ 2} - \bar{T}_{a,\ stby,\ 2}) - (57.2\ °C - 19.7\ °C)]\ UA\tau_{stby,\ 2}$

Where:

Q_{da} = the adjusted daily water heating energy consumption, Btu (kJ).

Q_d = as defined in section 6.1.5.

$\bar{T}_{stby,\ 2}$ = the mean tank temperature during the total standby portion, $\tau_{stby,\ 2}$, of the 24-hour test, °F (°C).

$\bar{T}_{a,\ stby,\ 2}$ = the average ambient temperature during the total standby portion, $\tau_{stby,\ 2}$, of the 24-hour test, °F (°C).

UA = as defined in section 6.1.4.

$\tau_{stby,\ 2}$ = the number of hours during the 24-hour simulated test when water is not being withdrawn from the water heater.

A modification is also needed to take into account that the temperature difference between the outlet water temperature and supply water temperature may not be equivalent to the nominal value of 77 °F (135 °F–58 °F) or 42.8 °C (57.2 °C–14.4 °C). The following equations adjust the experimental data to a nominal 77 °F (42.8 °C) temperature rise.

The energy used to heat water, Btu/day (kJ/day), may be computed as:

$$Q_{HW} = \sum_{i=1}^{6} \frac{M_i C_{pi}\left(\overline{T}_{del,\,i} - \overline{T}_{in,\,i}\right)}{\eta_r}$$

Where:

M_i = the mass withdrawn for the *i*th draw (i = 1 to 6), lb (kg).

C_{pi} = the specific heat of the water of the *i*th draw, Btu/lb÷ °F (kJ/kg÷ °C).

$\bar{T}_{del,\ i}$ = the average water outlet temperature measured during the *i*th draw (i=1 to 6), °F (°C).

$\bar{T}_{in,\ i}$ = the average water inlet temperature measured during the *i*th draw (i=1 to 6), °F (°C).

η_r = as defined in section 6.1.3.

The energy required to heat the same quantity of water over a 77 °F (42.8 °C) temperature rise, Btu/day (kJ/day), is:

$$Q_{HW,\,77°F} = \sum_{i=1}^{6} \frac{M_i C_{pi}(135°F - 58°F)}{\eta_r}$$

$$\text{or } Q_{HW,\,42.8°C} = \sum_{i=1}^{6} \frac{M_i C_{pi}(57.2°C - 14.4°C)}{\eta_r}$$

The difference between these two values is:

$Q_{HWD} = Q_{HW,\ 77°-F} - Q_{HW}$

or $Q_{HWD} = Q_{HW,42.8°-F} - Q_{HW}$

which must be added to the adjusted daily water heating energy consumption value. Thus, the daily energy consumption value which takes into account that the temperature difference between the storage tank and ambient temperature may not be 67.5 °F (37.5 °C) and that the temperature rise across the storage tank may not be 77 °F (42.8 °C) is:

$Q_{dm} = Q_{da} + Q_{HWD}$

6.1.7 Energy Factor. The energy factor, Ef, is computed as:

$$E_f = \sum_{i=1}^{6} \frac{M_i C_{pi}(135°F - 58°F)}{Q_{dm}}$$

or

$$E_f = \sum_{i=1}^{6} \frac{M_i C_{pi}(57.2°C - 14.4°C)}{Q_{dm}}$$

Where:

Q_{dm} = the modified daily water heating energy consumption as computed in accordance with section 6.1.6, Btu (kJ).

M_i = the mass withdrawn for the ith draw (i = 1 to 6), lb (kg).

C_{pi} = the specific heat of the water of the ith draw, Btu/lb °F (kJ/kg °C).

6.1.8 *Annual Energy Consumption*. The annual energy consumption for storage-type and heat pump water heaters is computed as:

$E_{annual} = 365 \times Q_{dm}$

Where:

Q_{dm} = the modified daily water heating energy consumption as computed in accordance with section 6.1.6, Btu (kJ).

365 = the number of days in a year.

6.2 *Instantaneous Water Heaters.*

6.2.1 *Maximum GPM (L/min) Rating Computation.* Compute the maximum gpm (L/min) rating as:

$$F_{max} = \frac{M_{10m}\left(\overline{T}_{del} - \overline{T}_{in}\right)}{10(\rho)(135°F - 58°F)}$$

$$\text{or } F_{max} = \frac{M_{10m}\left(\overline{T}_{del} - \overline{T}_{in}\right)}{10(\rho)(57.2°C - 14.4°C)}$$

which may be expressed as:

$$F_{max} = \frac{M_{10m}\left(\overline{T}_{del} - \overline{T}_{in}\right)}{10(\rho)(77°F)}$$

$$\text{or } F_{max} = \frac{M_{10m}\left(\overline{T}_{del} - \overline{T}_{in}\right)}{10(\rho)(42.8°C)}$$

Where:

M_{10m} = the mass of water collected during the 10-minute test, lb (kg).

$\bar{T}_{del}$ = the average delivery temperature, °F (°C).

$\bar{T}_{in}$ = the average inlet temperature, °F (°C).

ρ = the density of water at the average delivery temperature, lb/gal (kg/L).

If a water meter is used the maximum gpm (L/min) rating is computed as:

$$F_{max} = \frac{V_{10m}\left(\overline{T}_{del} - \overline{T}_{in}\right)}{10(77°F)}$$

$$\text{or } F_{max} = \frac{V_{10m}\left(\overline{T}_{del} - \overline{T}_{in}\right)}{10(42.8°C)}$$

Where:

V_{10m} = the volume of water measured during the 10-minute test, gal (L).

$\bar{T}_{del}$ = as defined in this section.

$\bar{T}_{in}$ = as defined in this section.

6.2.2 *Recovery Efficiency*

6.2.2.1 *Fixed Input Instantaneous Water Heaters.* The recovery efficiency is computed as:

$$\eta_r = \frac{M_1 C_{p1}\left(\overline{T}_{del,1} - \overline{T}_{in,1}\right)}{Q_r}$$

Where:

M_1 = total mass removed during the first draw of the 24-hour simulated use test, lb (kg), or, if the volume of water is being measured,

$M_1 = V_1 \cdot \rho$

Where:

V_1 = total volume removed during the first draw of the 24-hour simulated use test, gal (L).

ρ= density of the water at the water temperature measured at the point where the flow volume is measured, lb/gal (kg/L).

C_{p1} = specific heat of the withdrawn water, $(\bar{T}_{del,1} + T_{in,1}) / 2$, Btu/lb °F (kJ/kg °C).

$\bar{T}_{del,\ 1}$ = average water outlet temperature measured during the first draw of the 24-hour simulated use test, °F (°C).

$\bar{T}_{in,\ 1}$ = average water inlet temperature measured during the first draw of the 24-hour simulated use test, °F (°C).

Q_r = the total energy used by the water heater between cut-out prior to the first draw and cut-out following the first draw, including auxiliary energy such as pilot lights, pumps, fans, etc., Btu (kJ). (Electrical auxiliary energy shall be converted to thermal energy using the following conversion: 1 kWh = 3,412 Btu.)

6.2.2.2 *Variable Input Instantaneous Water Heaters.* For instantaneous water heaters that have a variable firing rate, two recovery efficiency values are computed, one at the maximum input rate and one at the minimum input rate. The recovery efficiency used in subsequent computations is taken as the average of these two values. The maximum recovery efficiency is computed as:

$$\eta_{r,\,max} = \frac{M_1 C_{p1}\left(\overline{T}_{del,1} - \overline{T}_{in,1}\right)}{Q_{r,\,max}}$$

Where:

M_1 = as defined in section 6.2.2.1.

C_{p1} = as defined in section 6.2.2.1.

$\bar{T}_{del,\ 1}$ = as defined in section 6.2.2.1.

$\bar{T}_{in,\ 1}$ = as defined in section 6.2.2.1.

$Q_{r,\ max}$ = the total energy used by the water heater between burner cut-out prior to the first draw and burner cut-out following the first draw, including auxiliary energy such as pilot lights, Btu (kJ).

The minimum recovery efficiency is computed as:

$$\eta_{r,\,min} = \frac{M_4 C_{p4}\left(\overline{T}_{del,4} - \overline{T}_{in,4}\right)}{Q_{r,\,min}}$$

Where:

M_4 = the mass withdrawn during the fourth draw, lb (kg), or, if the volume of water is being measured,

$M_4 = V_4\ \rho$

Where:

V_4 = total volume removed during the first draw of the 24-hour simulated use test, gal (L).

ρ = as defined in 6.2.2.1

C_{p4} = the specific heat of water, Btu/lb °F (kJ/kg °C).

$\bar{T}_{del,\ 4}$ = the average delivery temperature for the fourth draw, °F (°C).
$\bar{T}_{in,\ 4}$ = the average inlet temperature for the fourth draw, °F (°C).
$Q_{r,\ min}$ = the total energy consumed between the beginning of the fourth draw and burner cut-out following the fourth draw, including auxiliary energy such as pilot lights, Btu (kJ).

The recovery efficiency is computed as:

$$\eta_r = \frac{\eta_{r,\max} + \eta_{r,\min}}{2}$$

Where:

$\eta_{r,max}$ = as calculated above.
$\eta_{r,min}$ = as calculated above.

6.2.3 *Daily Water Heating Energy Consumption*. The daily water heating energy consumption, Q_d, is computed as:

$Q_d = Q$

Where:

Q = the energy used by the instantaneous water heater during the 24-hr simulated use test.

A modification is needed to take into account that the temperature difference between the outlet water temperature and supply water temperature may not be equivalent to the nominal value of 77 °F (135 °F − 58 °F) or 42.8 °C (57.2 °C − 14.4 °C). The following equations adjust the experimental data to a nominal 77 °F (42.8 °C) temperature rise.

The energy used to heat water may be computed as:

$$Q_{HW} = \sum_{i=1}^{6} \frac{M_i C_{pi}\left(\bar{T}_{del,\,i} - \bar{T}_{in,\,i}\right)}{\eta_r}$$

Where:

M_i = the mass withdrawn during the ith draw, lb (kg).
C_{pi} = the specific heat of water of the ith draw, Btu/lb °F (kJ/kg (°C).
$\bar{T}_{del,i}$ = the average delivery temperature of the ith draw, °F (°C).
$\bar{T}_{in,i}$ = the average inlet temperature of the ith draw, °F (°C).
η_r = as calculated in section 6.2.2.2.

The energy required to heat the same quantity of water over a 77 °F (42.8 °C) temperature rise is:

$$Q_{HW,\,77°F} = \sum_{i=1}^{6} \frac{M_i C_{pi}(135°F - 58°F)}{\eta_r}$$

$$\text{or } Q_{HW,\,42.8°C} = \sum_{i=1}^{6} \frac{M_i C_{pi}(57.2°C - 14.4°C)}{\eta_r}$$

Where:

M_i = the mass withdrawn during the *i*th draw, lb (kg).
C_{pi} = the specific heat of water of the ith draw, Btu/lb °F (kJ/kg (°C).
η_r = as calculated above.

The difference between these two values is:

$Q_{HWD} = Q_{HW,\ 77\ °F} - Q_{HW}$
or $Q_{HWD} = Q_{HW,\ 42.8\ °C} - Q_{HW}$

which much be added to the daily water heating energy consumption value. Thus, the daily energy consumption value which takes into account that the temperature rise across the storage tank may not be 77 °F (42.8 °C) is:

$Q_{dm} = Q_d + Q_{HWD}$

6.2.4 *Energy Factor*. The energy factor, E_f, is computed as:

$$E_f = \sum_{i=1}^{6} \frac{M_i C_{pi}(135°F - 58°F)}{Q_{dm}}$$

$$\text{or } E_f = \sum_{i=1}^{6} \frac{M_i C_{pi}(57.2°C - 14.4°C)}{Q_{dm}}$$

Where:

Q_{dm} = the daily water heating energy consumption as computed in accordance with section 6.2.3, Btu (kJ).
M_i = the mass associated with the *i*th draw, lb (kg).
C_{pi} = the specific heat of water computed at a temperature of (58 °F + 135 °F) / 2, Btu/lb °F [(14.4 °C + 57.2 °C) / 2, kJ/kg °C].

6.2.5 *Annual Energy Consumption*. The annual energy consumption for instantaneous type water heaters is computed as:

$E_{annual} = 365 \times Q_{dm}$

Where:

Q_{dm} = the modified daily energy consumption, Btu/day (kJ/day).
365 = the number of days in a year.

7. Ratings for Untested Models

In order to relieve the test burden on manufacturers who offer water heaters which differ only in fuel type or power input, ratings for untested models may be established in accordance with the following procedures. In lieu of the following procedures a manufacturer may elect to test the unit for which a rating is sought.

7.1 *Gas Water Heaters*. Ratings obtained for gas water heaters using natural gas can be used for an identical water heater which utilizes propane gas if the input ratings are within ±10%.

7.2 *Electric Water Heaters*

7.2.1 *First-Hour Rating*. If an electric storage-type water heater is available with more than one input rating, the manufacturer

shall designate the standard input rating, and the water heater need only be tested with heating elements at the designated standard input ratings. The first-hour ratings for units having power input rating less than the designated standard input rating shall be assigned a first-hour rating equivalent to the first draw of the first-hour rating for the electric water heater with the standard input rating. For units having power inputs greater than the designated standard input rating, the first-hour rating shall be equivalent to that measured for the water heater with the standard input rating.

7.2.2 *Energy Factor*. The energy factor for identical electric storage-type water heaters, with the exception of heating element wattage, may use the energy factor obtained during testing of the water heater with the designated standard input rating.

[63 FR 26008, May 11, 1998; 63 FR 38738, July 20, 1998, as amended at 66 FR 4497, Jan. 17, 2001]

APPENDIX F TO SUBPART B OF PART 430—UNIFORM TEST METHOD FOR MEASURING THE ENERGY CONSUMPTION OF ROOM AIR CONDITIONERS

1. *Test method*. The test method for testing room air conditioners shall consist of application of the methods and conditions in American National Standard (ANS) Z234.1–1972, ''Room Air Conditioners,'' sections 4, 5, 6.1, and 6.5, and in American Society of Heating, Refrigerating and Air Conditioning in Engineers (ASHRAE) Standard 16–69, ''Method of Testing for Rating Room Air Conditioners.''

2. *Test conditions*. Establish the test conditions described in sections 4 and 5 of ANS Z234.1–1972 and in accordance with ASHRAE Standard 16–69.

3. *Measurements*. Measure the quantities delineated in section 5 of ANS Z234.1–1972.

4. *Calculations*. 4.1 Calculate the cooling capacity (expressed in Btu/hr) as required in section 6.1 of ANS Z234.1–1972 and in accordance with ASHRAE Standard 16–69.

4.2 Determine the electrical power input (expressed in watts) as required by section 6.5 of ANS Z234.1–1972 and in accordance with ASHRAE Standard 16–69.

[42 FR 27898, June 1, 1977. Redesignated and amended at 44 FR 37938, June 29, 1979]

APPENDIX G TO SUBPART B OF PART 430—UNIFORM TEST METHOD FOR MEASURING THE ENERGY CONSUMPTION OF UNVENTED HOME HEATING EQUIPMENT

1. Testing conditions.

1.1 *Installation*.

1.1.1 *Electric heater*. Install heater according to manufacturer's instructions. Heaters shall be connected to an electrical supply circuit of nameplate voltage with a wattmeter installed in the circuit. The wattmeter shall have a maximum error not greater than one percent.

1.1.2 *Unvented gas heater*. Install heater according to manufacturer's instructions. Heaters shall be connected to a gas supply line with a gas displacement meter installed between the supply line and the heater according to manufacturer's specifications. The gas displacement meter shall have a maximum error not greater than one percent. Gas heaters with electrical auxiliaries shall be connected to an electrical supply circuit of nameplate voltage with a wattmeter installed in the circuit. The wattmeter shall have a maximum error not greater than one percent.

1.1.3 *Unvented oil heater*. Install heater according to manufacturer's instructions. Oil heaters with electric auxiliaries shall be connected to an electrical supply circuit of nameplate voltage with a wattmeter installed in the circuit. The wattmeter shall have a maximum error not greater than one percent.

1.2 *Temperature regulating controls*. All temperature regulating controls shall be shorted out of the circuit or adjusted so that they will not operate during the test period.

1.3 *Fan controls*. All fan controls shall be set at the highest fan speed setting.

1.4 *Energy supply*.

1.4.1 *Electrical supply*. Supply power to the heater within one percent of the nameplate voltage.

1.4.2 *Natural gas supply*. For an unvented gas heater utilizing natural gas, maintain the gas supply to the heater with a normal inlet test pressure immediately ahead of all controls at 7 to 10 inches of water column. The regulator outlet pressure at normal supply test pressure shall be approximately that recommended by the manufacturer. The natural gas supplied should have a higher heating value within ±5 percent of 1,025 Btu's per standard cubic foot. Determine the higher heating value, in Btu's per standard cubic foot, for the natural gas to be used in the test, with an error no greater than one percent. Alternatively, the test can be conducted using ''bottled'' natural gas of a higher heating value within ±5 percent of 1,025 Btu's per standard cubic foot as long as the actual higher heating value of the bottled natural gas has been determined with an error no greater than one percent as certified by the supplier.

1.4.3 *Propane gas supply*. For an unvented gas heater utilizing propane, maintain the gas supply to the heater with a normal inlet test pressure immediately ahead of all controls at 11 to 13 inches of water column. The regulator outlet pressure at normal supply

test pressure shall be that recommended by the manufacturer. The propane supplied should have a higher heating value of within±5 percent of 2,500 Btu's per standard cubic foot. Determine the higher heating value in Btu's per standard foot, for the propane to be used in the test, with an error no greater than one percent. Alternatively, the test can be conducted using ''bottled'' propane of a higher heating value within ±5 percent of 2,500 Btu's per standard cubic foot as long as the actual higher heating value of the bottled propane has been determined with an error no greater than one percent as certified by the supplier.

1.4.4 *Oil supply*. For an unvented oil heater utilizing kerosene, determine the higher heating value in Btu's per gallon with an error no greater than one percent. Alternatively, the test can be conducted using a tested fuel of a higher heating value within ±5 percent of 137,400 Btu's per gallon as long as the actual higher heating value of the tested fuel has been determined with an error no greater than one percent as certified by the supplier.

1.5 *Energy flow instrumentation*. Install one or more energy flow instruments which measure, as appropriate and with an error no greater than one percent, the quantity of electrical energy, natural gas, propane gas, or oil supplied to the heater.

2. Testing and measurements.

2.1 *Electric power measurement*. Establish the test conditions set forth in section 1 of this appendix. Allow an electric heater to warm up for at least five minutes before recording the maximum electric power measurement from the wattmeter. Record the maximum electric power (P_E) expressed in kilowatts.

Allow the auxiliary electrical system of a forced air unvented gas, propane, or oil heater to operate for at least five minutes before recording the maximum auxiliary electric power measurement from the wattmeter. Record the maximum auxiliary electric power (P_A) expressed in kilowatts.

2.2 *Natural gas, propane, and oil measurement*. Establish the test conditions as set forth in section 1 of this appendix. A natural gas, propane, or oil heater shall be operated for one hour. Using either the nameplate rating or the energy flow instrumentation set forth in section 1.5 of this appendix and the fuel supply rating set forth in sections 1.4.2, 1.4.3, or 1.4.4 of this appendix, as appropriate, determine the maximum fuel input (P_F) of the heater under test in Btu's per hour. The energy flow instrumentation shall measure the maximum fuel input with an error no greater than one percent.

3. Calculations.

3.1 *Annual energy consumption for primary electric heaters*. For primary electric heaters, calculate the annual energy consumption (E_E) expressed in kilowatt-hours per year and defined as:

E_E=2080(0.77)DHR

where:

2080=national average annual heating load hours
0.77=adjustment factor
DHR=design heating requirement and is equal to P_E/1.2 in kilowatts.
P_E=as defined in 2.1 of this appendix
1.2=typical oversizing factor for primary electric heaters

3.2 *Annual energy consumption for primary electric heaters by geographic region of the United States*. For primary electric heaters, calculate the annual energy consumption by geographic region of the United States (E_R) expressed in kilowatt-hours per year and defined as:

E_R=HLH(0.77) (DHR)

where:

HLH=heating load hours for a specific region determined from Figure 1 of this appendix in hours
0.77=as defined in 3.1 of this appendix
DHR=as defined in 3.1 of this appendix

3.3 *Rated output for electric heaters*. Calculate the rated output (Q_{out}) for electric heaters, expressed in Btu's per hour, and defined as:

Q_{out}=P_E (3,412 Btu/kWh)

where:

P_E=as defined in 2.1 of this appendix

3.4 *Rated output for unvented heaters using either natural gas, propane, or oil*. For unvented heaters using either natural gas, propane, or oil equipped without auxiliary electrical systems, the rated output (Q_{out}), expressed in Btu's per hour, is equal to P_F, as determined in section 2.2 of this appendix.

For unvented heaters using either natural gas, propane, or oil equipped with auxiliary electrical systems, calculate the rated output (Q_{out}), expressed in Btu's per hour, and defined as:

Q_{out}=P_F+P_A (3,412 Btu/kWh)

where:

P_F=as defined in 2.2 of this appendix in Btu/hr
P_A=as defined in 2.1 of this appendix in Btu/hr

FIGURE I

Heating Load Hours (HLH) for the United States and Territories

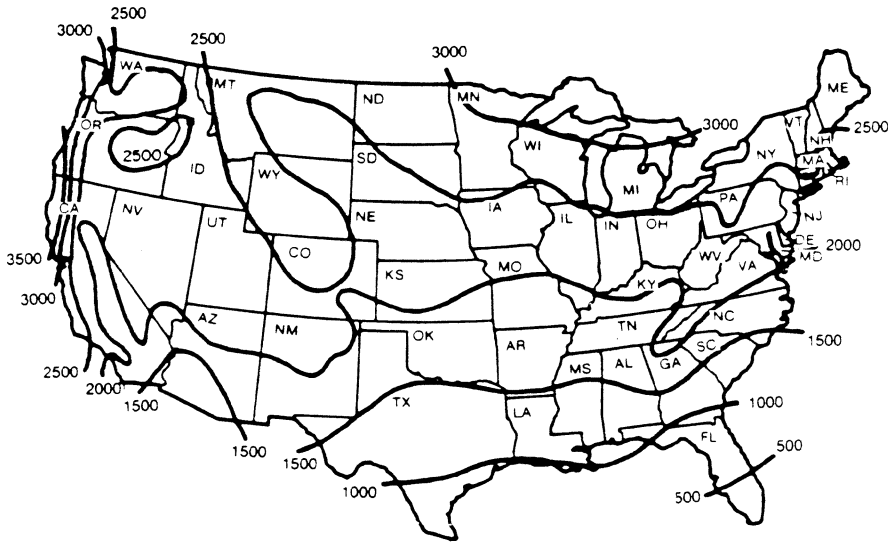

This map is reasonably accurate for most parts of the United States but is necessarily highly generalized and consequently not too accurate in mountainous regions, particularly in the Rockies

Alaska — 3500 HLH
Hawaii and Territories — O HLH

(Energy Policy and Conservation Act, Pub. L. 94–163, as amended by Pub. L. 94–385; Federal Energy Administration Act of 1974, Pub. L. 93–275, as amended by Pub. L. 94–385; Department of Energy Organization Act, Pub. L. 95–91; E.O. 11790, 39 FR 23185)

[43 FR 20132, May 10, 1978. Redesignated and amended at 44 FR 37938, June 29, 1979; 49 FR 12157, Mar. 28, 1984]

APPENDIX H TO SUBPART B OF PART 430—UNIFORM TEST METHOD FOR MEASURING THE ENERGY CONSUMPTION OF TELEVISION SETS

1. DEFINITIONS

1.1 ''IRE-unit flat field'' means a specific video electrical signal which results in a particular level of brightness of the television screen as established by the Institute of Radio Engineers.

1.2 ''Filament keep-warm'' means a feature that provides a voltage to keep vacuum tube and/or picture tube filaments warm for the purpose of allowing almost instantaneous response to the power control switch.

1.3 ''Operating time'' (t_o) means the hours per year during which the television set is operating with power control turned on.

1.4 ''Remote control'' means an optional feature which allows the user to control the television set from more than one location by a hand held device.

1.5 ''Standby power consumption'' (P_s) means the minimum amount of energy consumed with the power control switch turned off.

1.6 ''Standby time'' (t_s) means the hours per year during which the television set is

connected to a power outlet with the power control switch turned off.

1.7 ''Vacation switch or master on-off switch'' means an optional energy saving feature incorporated into the design of a television set that permits the user to disconnect the filament keep-warm circuit(s).

1.8 ''Remote control defeat switch'' means a switch which permits the user to disconnect all standby power to a television set.

2. Testing Conditions and Measurements

2.1 *Test equipment and test signals.* The following equipment and test signals shall be used for testing of television sets.

2.1.1 Regulated power source capable of supplying 120 volts (±1.2 volts) alternating current.

2.1.2 Signal generator capable of producing radio frequency (RF) television test signals, at a convenient very high frequency (VHF) channel, modulated with, National Television System Committee composite video as follows:

2.1.2.1 Standard White Pattern, RF signal modulated to 87 percent with a 100 IRE-unit flat field.

2.1.2.2 Standard Black Pattern, all adjustments as for 2.1.2.1 except modulated with a zero IRE-unit flat field.

2.1.2.3 The test signals in 2.1.2.1 and 2.1.2.2, supplied by a source whose impedance equals the design antenna impedance of the television set under test, shall be adjusted to a level of 70 decibels (dB) ±3dB, referred to a zero dB level of one femtowatt (1×10^{-15} watt) available power. (For a 300 ohm source, 70 dB referred to one femtowatt corresponds to an open-circuit voltage of 3.5 millivolts. For the calculation of ''available power'' use American National Standard C.16.13–1961, Method of Testing Monochrome Television Broadcast Receivers.)

2.1.3 Wattmeter capable of measuring the average power consumption of the television set under test. The wattmeter shall be accurate to within 1 percent of the full scale value. All measurements shall be made on the upper half of the scale of the wattmeter.

2.2 *Initial set-up of television set.*

2.2.1 Remove all batteries from television sets designed for both battery and alternating current operation. Deactivate all present or automatic controls affecting brightness which are customer options. Adjust all non-customer controls according to the manufacturer's service procedure.

2.2.2 Apply power to the television set under test from the power source specified in 2.1.1 through the wattmeter specified in 2.1.3. Adjust the volume control to the lowest possible setting.

2.2.3 Connect the output of the signal generator as specified in 2.1.2 to the VHF antenna terminals of the television set. Tune the television set to the channel of the RF signal.

2.3 *Measurement of operating power consumption (P_o)*

2.3.1 Turn on the television set and allow at least five minutes warm-up time. With the synchronization controls adjusted for a stable test pattern, apply the standard white pattern specified in 2.1.2.1 to the television set. Adjust any customer controls other than the volume or synchronization controls for maximum power consumption as indicated by the wattmeter specified in 2.1.3. Illuminate any room illuminance sensor which has not been deactivated, to produce maximum power consumption. Record the white pattern consumption (P_w) as indicated by the wattmeter in watts.

2.3.2 Change the signal source to the standard black pattern specified in 2.1.2.2. Adjust any customer controls, other than the volume or synchronization controls, for the minimum power consumption as indicated by the wattmeter. Cover any room illuminance sensor which has not been deactivated. Record the black pattern power consumption (P_b) as indicated by the wattmeter in watts.

2.3.3 Compute the operating power consumption (p_o) as follows:

$$P_o=(P_w+P_b/2)$$

where

P_o=operating power consumption in watts
P_w=as determined from 2.3.1
P_b=as determined from 2.3.2

2.2 *Measurements of standby power consumption (P_s)*

2.4.1 For television sets without either a vacation switch or a remote control defeat switch, turn the power switch off and after two minutes measure the standby power consumption (P).

2.4.2 For a television set equipped with a remote control defeat switch, a vacation switch or both, turn the power switch, any vacation switch, and any remote er consumptions, (P_{max}). The standby power is then calculated from the equation:

$$P_s=[(P_{\max}-P_{\min})/2]+P_{\min}$$

where

P_s=standby power consumption in watts
$P_{\max}$=power consumption, in watts, measured with the television set power switch off and the vacation switch and remote control defeat switch in the highest energy consuming position.
$P_{\min}$=power consumption, in watts, measured with the television set power switch off and the vacation switch and remote control defeat switch in the lowest energy consuming position.

3.0 *Average Annual Energy Consumption*

$$E=(P_o t_o/1{,}000)+(P_s t_s/1{,}000)=2.2P_o+6.56P_s$$

where

E=total average energy consumed by the television set (kilowatt-hour per year)

P_o=operating power consumption as computed in 2.3.3

t_o=operating time, 2,200 h/yr

P_s=standby power consumption computed in 2.4

t_s=standby time, 6,560 h/yr

[42 FR 46154, Sept. 14, 1977. Redesignated and amended at 44 FR 37938, June 29, 1979]

APPENDIX I TO SUBPART B OF PART 430—UNIFORM TEST METHOD FOR MEASURING THE ENERGY CONSUMPTION OF CONVENTIONAL RANGES, CONVENTIONAL COOKING TOPS, CONVENTIONAL OVENS, AND MICROWAVE OVENS

1. Definitions

1.1 *Built-in* means the product is supported by surrounding cabinetry, walls, or other similar structures.

1.2 *Drop-in* means the product is supported by horizontal surface cabinetry.

1.3 *Forced convection* means a mode of conventional oven operation in which a fan is used to circulate the heated air within the oven compartment during cooking.

1.4 *Freestanding* means the product is not supported by surrounding cabinetry, walls, or other similar structures.

1.5 *IEC 705* refers to the test standard published by the International Electrotechnical Commission, entitled ''Method for Measuring the Performance of Microwave Ovens for Household and Similar Purposes,'' Publication 705–1988 and Amendment 2—1993. (See 10 CFR 430.22)

1.6 *Normal nonoperating temperature* means the temperature of all areas of an appliance to be tested are within 5 °F (2.8 °C) of the temperature that the identical areas of the same basic model of the appliance would attain if it remained in the test room for 24 hours while not operating with all oven doors closed and with any gas pilot lights on and adjusted in accordance with manufacturer's instructions.

1.7 *Primary energy consumption* means either the electrical energy consumption of a conventional electric oven or the gas energy consumption of a conventional gas oven.

1.8 *Secondary energy consumption* means any electrical energy consumption, other than clock energy consumption, of a conventional gas oven.

1.9 *Standard cubic foot (L) of gas* means that quantity of gas that occupies 1 cubic foot (L) when saturated with water vapor at a temperature of 60 °F (15.6 °C) and a pressure of 30 inches of mercury (101.6 kPa) (density of mercury equals 13.595 grams per cubic centimeter).

1.10 *Thermocouple* means a device consisting of two dissimilar metals which are joined together and, with their associated wires, are used to measure temperature by means of electromotive force.

1.11 *Symbol Usage.* The following identity relationships are provided to help clarify the symbology used throughout this procedure.

A—Number of Hours in a Year
B—Number of Hours Pilot Light Contributes to Cooking
C—Specific Heat
E—Energy Consumed
Eff—Cooking Efficiency
H—Heating Value of Gas
K—Conversion for Watt-hours to Kilowatt hours
K_e—3.412 Btu/Wh, Conversion for Watt-hours to Btu's
M—Mass
n—Number of Units
O—Annual Useful Cooking Energy Output
P—Power
Q—Gas Flow Rate
R—Energy Factor, Ratio of useful Cooking Energy Output to Total Energy Input
S—Number of Self Cleaning Operations per Year
T—Temperature
t—Time
V—Volume of Gas Consumed
W—Weight of Test Block

2. Test Conditions

2.1 *Installation.* A free standing kitchen range shall be installed with the back directly against, or as near as possible to, a vertical wall which extends at least 1 foot above and on either side of the appliance. There shall be no side walls. A drop-in, built-in or wall-mounted appliance shall be installed in an enclosure in accordance with the manufacturer's instructions. These appliances are to be completely assembled with all handles, knobs, guards and the like mounted in place. Any electric resistance heaters, gas burners, baking racks, and baffles shall be in place in accordance with the manufacturer's instructions; however, broiler pans are to be removed from the oven's baking compartment. Disconnect any electrical clock which uses energy continuously, except for those that are an integral part of the timing or temperature controlling circuit of the oven, cooktop, or microwave oven. Do not disconnect or modify the circuit to any other electrical devices or features.

2.1.1 *Conventional electric ranges, ovens, and cooking tops.* These products shall be connected to an electrical supply circuit with voltage as specified in Section 2.2.1 with a watt-hour meter installed in the circuit. The watt-hour meter shall be as described in Section 2.9.1.1.

2.1.2 *Conventional gas ranges, ovens, and cooking tops.* These products shall be connected to a gas supply line with a gas meter installed between the supply line and the appliance being tested, according to manufacturer's specifications. The gas meter shall be as described in Section 2.9.2. Conventional gas ranges, ovens and cooking tops with electrical ignition devices or other electrical components shall be connected to an electrical supply circuit of nameplate voltage with a watt-hour meter installed in the circuit. The watt-hour meter shall be as described in Section 2.9.1.1.

2.1.3 *Microwave ovens.* Install the microwave oven in accordance with the manufacturer's instructions and connect to an electrical supply circuit with voltage as specified in Section 2.2.1. A watt-hour meter and watt meter shall be installed in the circuit and shall be as described in Section 2.9.1.1 and 2.9.1.2. If trial runs are needed to set the ''on'' time for the test, the test measurements are to be separated according to Section 4, Paragraph 12.6 of IEC 705 Amendment 2. (See 10 CFR 430.22)

2.2 *Energy supply.*

2.2.1 *Electrical supply.* Maintain the electrical supply to the conventional range, conventional cooking top, and conventional oven being tested at 240/120 volts except that basic models rated only at 208/120 volts shall be tested at that rating. Maintain the voltage within 2 percent of the above specified voltages. For the microwave oven testing, however, maintain the electrical supply to a microwave oven at 120 volts ±1 volt and at 60 hertz.

2.2.2 *Gas supply.*

2.2.2.1 *Gas burner adjustments.* Conventional gas ranges, ovens, and cooking tops shall be tested with all of the gas burners adjusted in accordance with the installation or operation instructions provided by the manufacturer. In every case, the burner must be adjusted with sufficient air flow to prevent a yellow flame or a flame with yellow tips.

2.2.2.2 *Natural gas.* For testing convertible cooking appliances or appliances which are designed to operate using only natural gas, maintain the natural gas pressure immediately ahead of all controls of the unit under test at 7 to 10 inches of water column (1743.6 to 2490.8 Pa). The regulator outlet pressure shall equal the manufacturer's recommendation. The natural gas supplied should have a heating value of approximately 1,025 Btu's per standard cubic foot (38.2 kJ/L). The actual gross heating value, H_n, in Btu's per standard cubic foot (kJ/L), for the natural gas to be used in the test shall be obtained either from measurements made by the manufacturer conducting the test using equipment that meets the requirements described in Section 2.9.4 or by the use of bottled natural gas whose gross heating value is certified to be at least as accurate a value that meets the requirements in Section 2.9.4.

2.2.2.3 *Propane.* For testing convertible cooking appliances with propane or for testing appliances which are designed to operate using only LP-gas, maintain the propane pressure immediately ahead of all controls of the unit under test at 11 to 13 inches of water column (2740 to 3238 Pa). The regulator outlet pressure shall equal the manufacturer's recommendation. The propane supplied should have a heating value of approximately 2,500 Btu's per standard cubic foot (93.2 kJ/L). The actual gross heating value, H_p, in Btu's per standard cubic foot (kJ/L), for the propane to be used in the test shall be obtained either from measurements made by the manufacturer conducting the test using equipment that meets the requirements described in Section 2.9.4 or by the use of bottled propane whose gross heating value is certified to be at least as accurate a value that meets the requirements described in Section 2.9.4.

2.2.2.4 *Test gas.* A basic model of a convertible cooking appliance shall be tested with natural gas, but may also be tested with propane. Any basic model of a conventional range, conventional cooking top, or conventional oven which is designed to operate using only natural gas as the energy source must be tested with natural gas. Any basic model of a conventional range, conventional cooking top, or conventional oven which is designed to operate using only LP gas as the gas energy source must be tested with propane gas.

2.3 *Air circulation.* Maintain air circulation in the room sufficient to secure a reasonably uniform temperature distribution, but do not cause a direct draft on the unit under test.

2.4 *Setting the conventional oven thermostat.*

2.4.1 *Conventional electric oven.* Install a thermocouple approximately in the center of the usable baking space. Provide a temperature indicator system for measuring the oven's temperature with an accuracy as indicated in Section 2.9.3.2. If the oven thermostat does not cycle on and off, adjust or determine the conventional electric oven thermostat setting to provide an average internal temperature which is 325°±5 °F (180.6° ±2.8 °C) higher than the room ambient air temperature. If the oven thermostat operates by cycling on and off, adjust or determine the conventional electric oven thermostat setting to provide an average internal temperature which is 325° ±5 °F (180.6°±2.8 °C) higher than the room ambient air temperature. This shall be done by measuring the maximum and minimum temperatures in any three consecutive cut-off/cut-on actions of the electric resistance heaters, excluding the initial cut-off/cut-on action, by the thermostat after the temperature rise of 325°±5 °F

(180.6° ±2.8 °C) has been attained by the conventional electric oven. Remove the thermocouple after the thermostat has been set.

2.4.2 *Conventional gas oven*. Install five parallel-connected weighted thermocouples, one located at the center of the conventional gas oven's usable baking space and the other four equally spaced between the center and the corners of the conventional gas oven on the diagonals of a horizontal plane through the center of the conventional gas oven. Each weighted thermocouple shall be constructed of a copper disc that is 1-inch (25.4 mm) in diameter and ⅛-inch (3.2 mm) thick. The two thermocouple wires shall be located in two holes in the disc spaced ½-inch (12.7 mm) apart, with each hole being located ¼-inch (6.4 mm) from the center of the disc. Both thermocouple wires shall be silver-soldered to the copper disc. Provide a temperature indicator system for measuring the oven's temperature with an accuracy as indicated in Section 2.9.3.2. If the oven thermostat does not cycle on or off, adjust or determine the conventional gas oven thermostat setting to provide an average internal temperature which is 325 °±5 °F (180.6 °±2.8 °C) higher than the room ambient air temperature. If the oven thermostat operates by cycling on and off, adjust or determine the conventional gas oven thermostat setting to provide an average internal temperature which is 325°±5 °F (180.6±2.8 °C) higher than the room ambient air temperature. This shall be done by measuring the maximum and minimum temperatures in any three consecutive cut-off/cut-on actions of the gas burners, excluding the initial cut-off/cut-on action, by the thermostat after the temperature rise of 325°±5 °F (180.6 °±2.8 °C) has been attained by the conventional gas oven. Remove the thermocouples after the thermostat has been set.

2.5 *Ambient room air temperature*. During the test, maintain an ambient room air temperature, T_R, of 77°±9 °F (25°±5 °C) for conventional ovens and cooking tops, or as indicated in Section 4, Paragraph 12.4 of IEC 705 Amendment 2 for microwave ovens, as measured at least 5 feet (1.5 m) and not more than 8 feet (2.4 m) from the nearest surface of the unit under test and approximately 3 feet (0.9 m) above the floor. The temperature shall be measured with a thermometer or temperature indicating system with an accuracy as specified in Section 2.9.3.1.

2.6 *Normal nonoperating temperature*. All areas of the appliance to be tested shall attain the normal nonoperating temperature, as defined in Section 1.6, before any testing begins. The equipment for measuring the applicable normal nonoperating temperature shall be as described in Sections 2.9.3.1, 2.9.3.2, 2.9.3.3, 2.9.3.4, and 2.9.3.5, as applicable.

2.7 *Test blocks for conventional oven and cooking top*. The test blocks shall be made of aluminum alloy No. 6061, with a specific heat of 0.23 Btu/lb- °F (0.96 kJ/[kg ÷ °C]) and with any temper that will give a czoefficient of thermal conductivity of 1073.3 to 1189.1 Btu-in/h-ft²- °F (154.8 to 171.5 W/[m ÷ °C]). Each block shall have a hole at its top. The hole shall be 0.08 inch (2.03 mm) in diameter and 0.80 inch (20.3 mm) deep. The manufacturer conducting the test may provide other means which will ensure that the thermocouple junction is installed at this same position and depth.

The bottom of each block shall be flat to within 0.002 inch (0.051 mm) TIR (total indicator reading). Determine the actual weight of each test block with a scale with an accuracy as indicated in Section 2.9.5.

2.7.1 *Conventional oven test block*. The test block for the conventional oven, W_1, shall be 6.25±0.05 inches (158.8±1.3 mm) in diameter, approximately 2.8 inches (71 mm) high and shall weigh 8.5±0.1 lbs (3.86±0.05 kg). The block shall be finished with an anodic black coating which has a minimum thickness of 0.001 inch (0.025 mm) or with a finish having the equivalent absorptivity.

2.7.2 *Small test block for conventional cooking top*. The small test block, W_2, shall be 6.25±0.05 inches (158.8±1.3 mm) in diameter, approximately 2.8 inches (71 mm) high and shall weigh 8.5±0.1 lbs (3.86±0.05 kg).

2.7.3 *Large test block for conventional cooking top*. The large test block for the conventional cooking top, W_3, shall be 9±0.05 inches (228.6±1.3 mm) in diameter, approximately 3.0 inches (76 mm) high and shall weigh 19±0.1 lbs (8.62±0.05 kg).

2.7.4 *Thermocouple installation*. Install the thermocouple such that the thermocouple junction (where the thermocouple contacts the test block) is at the bottom of the hole provided in the test block and that the thermocouple junction makes good thermal contact with the aluminum block. If the test blocks are to be water cooled between tests the thermocouple hole should be sealed, or other steps taken, to insure that the thermocouple hole is completely dry at the start of the next test. Provide a temperature indicator system for measuring the test block temperature with an accuracy as indicated in Section 2.9.3.3.

2.7.5 *Initial test block temperature*. Maintain the initial temperature of the test blocks, T_I, within ±4 °F (±2.2 °C) of the ambient room air temperature as specified in Section 2.5. If the test block has been cooled (or heated) to bring it to room temperature, allow the block to stabilize for at least 2 minutes after removal from the cooling (or heating) source, before measuring its initial temperature.

2.8 *Microwave oven test load*.

2.8.1 *Test container*. The test container shall be as specified in Section 4, Paragraph 12.2 of IEC 705 Amendment 2.

2.8.2 *Test water load*. The test water load shall be as specified in Section 4, Paragraph 12.1 of IEC 705 Amendment 2.

2.8.2.1 *Test water load and test container temperature*. Before the start of the test, the oven and the test container shall be at ambient temperature as specified in Section 4, Paragraph 12.4 of IEC 705 Amendment 2. The test water load shall be contained in a chiller (not the test container) and maintained at 18° ±1.8 °F (10° ±1 °C) below the ambient room temperature.

2.9 *Instrumentation*. Perform all test measurements using the following instruments, as appropriate:

2.9.1 *Electrical Measurements*.

2.9.1.1 *Watt-hour meter*. The watt-hour meter for measuring the electrical energy consumption of conventional ovens and cooking tops shall have a resolution of 1 watt-hour (3.6 kJ) or less and a maximum error no greater than 1.5 percent of the measured value for any demand greater than 100 watts. The watt-hour meter for measuring the energy consumption of microwave ovens shall have a resolution of 0.1 watt-hour (0.36 kJ) or less and a maximum error no greater than 1.5 percent of the measured value.

2.9.1.2 *Watt meter*. The watt meter used to measure the conventional oven, conventional range, range clock power or the power input of the microwave oven shall have a resolution of 0.2 watt (0.2 J/s) or less and a maximum error no greater than 5 percent of the measured value.

2.9.2 *Gas Measurements*.

2.9.2.1 *Positive displacement meters*. The gas meter to be used for measuring the gas consumed by the gas burners of the oven or cooking top shall have a resolution of 0.01 cubic foot (0.28 L) or less and a maximum error no greater than 1 percent of the measured value for any demand greater than 2.2 cubic feet per hour (62.3 L/h). If a positive displacement gas meter is used for measuring the gas consumed by the pilot lights, it shall have a resolution of at least 0.01 cubic foot (0.28 L) or less and have a maximum error no greater than 2 percent of the measured value.

2.9.2.2 *Flow meter*. If a gas flow meter is used for measuring the gas consumed by the pilot lights, it shall be calibrated to have a maximum error no greater than 1.5 percent of the measured value and a resolution of 1 percent or less of the measured value.

2.9.3 *Temperature measurement equipment*.

2.9.3.1 *Room temperature indicating system*. The room temperature indicating system shall be as specified in Section 4, Paragraph 12.3 of IEC 705 Amendment 2 for microwave ovens and Section 2.9.3.5 for ranges, ovens and cooktops.

2.9.3.2 *Temperature indicator system for measuring conventional oven temperature*. The equipment for measuring the conventional oven temperature shall have an error no greater than ±4 °F (±2.2 °C) over the range of 65° to 500 °F (18 °C to 260 °C).

2.9.3.3 *Temperature indicator system for measuring test block temperature*. The system shall have an error no greater than ±2 °F (±1.1 °C) when measuring specific temperatures over the range of 65° to 330 °F (18.3 °C to 165.6 °C). It shall also have an error no greater than ±2 °F (±1.1 °C) when measuring any temperature difference up to 240 °F (133.3 °C) within the above range.

2.9.3.4 *Test load temperatures*. The thermometer or other temperature measuring instrument used to measure the test water load temperature shall be as specified in Section 4, Paragraph 12.3 of IEC 705 Amendment 2. Use only one thermometer or other temperature measuring device throughout the entire test procedure.

2.9.3.5 *Temperature indicator system for measuring surface temperatures*. The temperature of any surface of an appliance shall be measured by means of a thermocouple in firm contact with the surface. The temperature indicating system shall have an error no greater than ±1 °F (±0.6°C) over the range 65° to 90 °F (18 °C to 32 °C).

2.9.4 *Heating Value*. The heating value of the natural gas or propane shall be measured with an instrument and associated readout device that has a maximum error no greater than ±0.5% of the measured value and a resolution of ±0.2% or less of the full scale reading of the indicator instrument. The heating value of natural gas or propane must be corrected for local temperature and pressure conditions.

2.9.5 *Scale*. The scale used for weighing the test blocks shall have a maximum error no greater than 1 ounce (28.4 g). The scale used for weighing the microwave oven test water load shall be as specified in Section 4, paragraph 12.3 of IEC 705 Amendment 2.

3. Test Methods and Measurements

3.1 *Test methods*.

3.1.1 *Conventional oven*. Perform a test by establishing the testing conditions set forth in Section 2, ''TEST CONDITIONS,'' of this Appendix, and adjust any pilot lights of a conventional gas oven in accordance with the manufacturer's instructions and turn off the gas flow to the conventional cooking top, if so equipped. Before beginning the test, the conventional oven shall be at its normal nonoperating temperature as defined in Section 1.6 and described in Section 2.6. Set the conventional oven test block W_1 approximately in the center of the usable baking space. If there is a selector switch for selecting the mode of operation of the oven, set it for normal baking. If an oven permits baking by either forced convection by using a fan, or without forced convection, the oven is to be tested in each of those two modes. The oven shall remain on for at least one complete

thermostat ''cut-off/cut-on'' of the electrical resistance heaters or gas burners after the test block temperature has increased 234 °F (130 °C) above its initial temperature.

3.1.1.1 *Self-cleaning operation of a conventional oven.* Establish the test conditions set forth in Section 2, ''TEST CONDITIONS,'' of this Appendix. Adjust any pilot lights of a conventional gas oven in accordance with the manufacturer's instructions and turn off the gas flow to the conventional cooking top. The temperature of the conventional oven shall be its normal nonoperating temperature as defined in Section 1.6 and described in Section 2.6. Then set the conventional oven's self-cleaning process in accordance with the manufacturer's instructions. If the self-cleaning process is adjustable, use the average time recommended by the manufacturer for a moderately soiled oven.

3.1.1.2 *Continuously burning pilot lights of a conventional gas oven.* Establish the test conditions set forth in Section 2, ''TEST CONDITIONS,'' of this Appendix. Adjust any pilot lights of a conventional gas oven in accordance with the manufacturer's instructions and turn off the gas flow to the conventional cooking top. If a positive displacement gas meter is used the, test duration shall be sufficient to measure a gas consumption which is at least 200 times the resolution of the gas meter.

3.1.2 *Conventional cooking top.* Establish the test conditions set forth in Section 2, ''TEST CONDITIONS,'' of this Appendix. Adjust any pilot lights of a conventional gas cooking top in accordance with the manufacturer's instructions and turn off the gas flow to the conventional oven(s), if so equipped. The temperature of the conventional cooking top shall be its normal nonoperating temperature as defined in Section 1.6 and described in Section 2.6. Set the test block in the center of the surface unit under test. The small test block, W_2, shall be used on electric surface units of 7 inches (178 mm) or less in diameter. The large test block, W_3, shall be used on electric surface units over 7 inches (177.8 mm) in diameter and on all gas surface units. Turn on the surface unit under test and set its energy input rate to the maximum setting. When the test block reaches 144 °F (80 °C) above its initial test block temperature, immediately reduce the energy input rate to 25±5 percent of the maximum energy input rate. After 15±0.1 minutes at the reduced energy setting, turn off the surface unit under test.

3.1.2.1 *Continuously burning pilot lights of a conventional gas cooking top.* Establish the test conditions set forth in Section 2, ''TEST CONDITIONS,'' of this Appendix. Adjust any pilot lights of a conventional gas cooking top in accordance with the manufacturer's instructions and turn off the gas flow to the conventional oven(s). If a positive displacement gas meter is used, the test duration shall be sufficient to measure a gas consumption which is at least 200 times the resolution of the gas meter.

3.1.3 *Microwave oven.*

3.1.3.1 *Microwave oven test energy or power output.* Establish the testing conditions set forth in Section 2, ''TEST CONDITIONS,'' of this Appendix. Follow the test procedure as specified in Section 4, Paragraph 12.4 of IEC 705 Amendment 2.

3.2 *Test measurements.*

3.2.1 *Conventional oven test energy consumption.* If the oven thermostat controls the oven temperature without cycling on and off, measure the energy consumed, E_O, when the temperature of the block reaches T_O (T_O is 234 °F (130 °C) above the initial block temperature, T_I). If the oven thermostat operates by cycling on and off, make the following series of measurements: Measure the block temperature, T_A, and the energy consumed, E_A, or volume of gas consumed, V_A, at the end of the last ''ON'' period of the conventional oven before the block reaches T_O. Measure the block temperature, T_B, and the energy consumed, E_B, or volume of gas consumed, V_B, at the beginning of the next ''ON'' period. Measure the block temperature, T_C, and the energy consumed, E_C, or volume of gas consumed, V_C, at the end of that ''ON'' period. Measure the block temperature, T_D, and the energy consumed, E_D, or volume of gas consumed, V_D, at the beginning of the following ''ON'' period. Energy measurements for E_O, E_A, E_B, E_C and E_D, should be expressed in watt-hours (kJ) for conventional electric ovens and volume measurements for V_A, V_B, V_C and V_D should be expressed in standard cubic feet (L) of gas for conventional gas ovens. For a gas oven, measure in watt-hours (kJ) any electrical energy, E_{IO}, consumed by an ignition device or other electrical components required for the operation of a conventional gas oven while heating the test block to T_O. The energy consumed by a continuously operating clock that is an integral part of the timing or temperature control circuit and cannot be disconnected during the test may be subtracted from the oven test energy to obtain the test energy consumption, E_O or E_{IO}.

3.2.1.1 *Conventional oven average test energy consumption.* If the conventional oven permits baking by either forced convection or without forced convection and the oven thermostat does not cycle on and off, measure the energy consumed with the forced convection mode, $(E_O)_1$, and without the forced convection mode, $(E_O)_2$, when the temperature of the block reaches T_O (T_O is 234 °F (130 °C) above the initial block temperature, T_I). If the conventional oven permits baking by either forced convection or without forced convection and the oven thermostat operates by cycling on and off, make the following series of measurements with and without the forced convection mode: Measure the block

temperature, T_A, and the energy consumed, E_A, or volume of gas consumed, V_A, at the end of the last ''ON'' period of the conventional oven before the block reaches T_O. Measure the block temperature, T_B, and the energy consumed, E_B, or volume of gas consumed, V_B, at the beginning of the next ''ON'' period. Measure the block temperature, T_C, and the energy consumed, E_C, or volume of gas consumed, V_C, at the end of that ''ON'' period. Measure the block temperature, T_D, and the energy consumed, E_D, or volume of gas consumed, V_D, at the beginning of the following ''ON'' period. Energy measurements for E_O, E_A, E_B, E_C and E_D should be expressed in watt-hours (kJ) for conventional electric ovens and volume measurements for V_A, V_B, V_C and V_D should be expressed in standard cubic feet (L) of gas for conventional gas ovens. For a gas oven that can be operated with or without forced convection, measure in watt-hours (kJ) any electrical energy consumed by an ignition device or other electrical components required for the operation of a conventional gas oven while heating the test block to T_O using the forced convection mode, $(E_{IO})_1$, and without using the forced convection mode, $(E_{IO})_2$. The energy consumed by a continuously operating clock that is an integral part of the timing or temperature control circuit and cannot be disconnected during the test may be subtracted from the oven test energy to obtain the test energy consumption, $(E_O)_1$ and $(E_O)_2$ or $(E_{IO})_1$ and $(E_{IO})_2$.

3.2.1.2 *Energy consumption of self-cleaning operation.* Measure the energy consumption, E_S, in watt-hours (kJ) of electricity or the volume of gas consumption, V_S, in standard cubic feet (L) during the self-cleaning test set forth in Section 3.1.1.1. For a gas oven, also measure in watt-hours (kJ) any electrical energy, E_{IS}, consumed by ignition devices or other electrical components required during the self-cleaning test. The energy consumed by a continuously operating clock that is an integral part of the timing or temperature control circuit and cannot be disconnected during the test may be subtracted from the self-cleaning test energy to obtain the energy consumption, E_S or E_{IS}

3.2.1.3 *Gas consumption of continuously burning pilot lights.* Measure the gas consumption of the pilot lights, V_{OP}, in standard cubic feet (L) of gas and the test duration, t_{OP}, in hours for the test set forth in Section 3.1.1.2. If a gas flow rate meter is used, measure the flow rate, Q_{OP}, in standard cubic feet per hour (L/h).

3.2.1.4 *Clock power.* If the conventional oven or conventional range includes an electric clock which is on continuously, and the power rating in watts (J/s) of this feature is not known, measure the clock power, P_{CL}, in watts (J/s.) The power rating or measurement of continuously operating clocks, that are an integral part of the timing or temperature control circuits and cannot be disconnected during testing, shall be multiplied by the applicable test period to calculate the clock energy consumption, in watt-hours (kJ), during a test. The energy consumed by the clock during the test may then be subtracted from the test energy to obtain the specified test energy consumption value.

3.2.2 *Conventional surface unit test energy consumption.* For the surface unit under test, measure the energy consumption, E_{CT}, in watt-hours (kJ) of electricity or the volume of gas consumption, V_{CT}, in standard cubic feet (L) of gas and the test block temperature, T_{CT}, at the end of the 15 minute (reduced input setting) test interval for the test specified in Section 3.1.2 and the total time, t_{CT}, in hours, that the unit is under test. Measure any electrical energy, E_{IC}, consumed by an ignition device of a gas heating element in watt-hours (kJ). The energy consumed by a continuously operating clock that is an integral part of the timing or temperature control circuit and cannot be disconnected during the test may be subtracted from the cooktop test energy to obtain the test energy consumption, E_{CT} or E_{IC}.

3.2.2.1 *Gas consumption of continuously burning pilot lights.* If the conventional gas cooking top under test has one or more continuously burning pilot lights, measure the gas consumed during the test by the pilot lights, V_{CP}, in standard cubic feet (L) of gas, and the test duration, t_{CP}, in hours as specified in Section 3.1.2.1. If a gas flow rate meter is used, measure the flow rate, Q_{CP}, in standard cubic feet per hour (L/h).

3.2.3 *Microwave oven test energy consumption and power input.* Measurements are to be made as specified in Section 4, Paragraphs 12.4 and 13 of IEC 705 and Amendment 2. Measure the electrical input energy, E_M, in watt-hours (kJ) consumed by the microwave oven during the test. Repeat the tests three times unless the power output value resulting from the second measurement is within 1.5% of the value obtained from the first measurement as stated in Section 4, Paragraphs 12.6 of IEC 705 Amendment 2. (See 10 CFR 430.22.)

3.3 *Recorded values.*

3.3.1 Record the test room temperature, T_R, at the start and end of each range, oven or cooktop test, as determined in Section 2.5.

3.3.2 Record measured test block weights W_1, W_2, and W_3 in pounds (kg).

3.3.3 Record the initial temperature, T_1, of the test block under test.

3.3.4 For a conventional oven with a thermostat which operates by cycling on and off, record the conventional oven test measurements T_A, E_A, T_B, E_B, T_C, E_C, T_D, and E_D for conventional electric ovens or T_A, V_A, T_B, V_B, T_C, V_C, T_D, and V_D for conventional gas ovens. If the thermostat controls the oven temperature without cycling on and off, record E_O. For a gas oven which also uses

electrical energy for the ignition or operation of the oven, also record E_{IO}.

3.3.5 For a conventional oven that can be operated with or without forced convection and the oven thermostat controls the oven temperature without cycling on and off, measure the energy consumed with the forced convection mode, $(E_O)_1$, and without the forced convection mode, $(E_O)_2$. If the conventional oven operates with or without forced convection and the thermostat controls the oven temperature by cycling on and off, record the conventional oven test measurements T_A, E_A, T_B, E_B, T_C, E_C, T_D, and E_D for conventional electric ovens or T_A, V_A, T_B, V_B, T_C, V_C, T_D, and V_D for conventional gas ovens. For a gas oven that can be operated with or without forced convection, measure any electrical energy consumed by an ignition device or other electrical components used during the forced convection mode, $(E_{IO})_1$, and without using the forced convection mode, $(E_{IO})_2$.

3.3.6 Record the measured energy consumption, E_S, or gas consumption, V_S, and for a gas oven, any electrical energy, E_{IS}, for the test of the self-cleaning operation of a conventional oven.

3.3.7 Record the gas flow rate, Q_{OP}; or the gas consumption, V_{OP}, and the elapsed time, t_{OP}, that any continuously burning pilot lights of a conventional oven are under test.

3.3.8 Record the clock power measurement or rating, P_{CL}, in watts (J/s), except for microwave oven tests.

3.3.9 For the surface unit under test, record the electric energy consumption, E_{CT}, or the gas volume consumption, V_{CT}, the final test block temperature, T_{CT}, the total test time, t_{CT}. For a gas cooking top which uses electrical energy for ignition of the burners, also record E_{IC}.

3.3.10 Record the gas flow rate, Q_{CP}; or the gas consumption, V_{CP}, and the elapsed time, t_{CP}, that any continuously burning pilot lights of a conventional gas cooking top are under test.

3.3.11 Record the heating value, H_n, as determined in Section 2.2.2.2 for the natural gas supply.

3.3.12 Record the heating value, H_p, as determined in Section 2.2.2.3 for the propane supply.

3.3.13 Record the electrical input energy and power input, E_M and P_M, for the microwave oven test; the initial and final temperature, T_1 and T_2, of the test water load; the mass of the test container before filling with the test water load and the mass of the test water load, M_C and M_W respectively; and the measured room temperature, T_0; as determined in Section 3.2.3.

4. Calculation of Derived Results From Test Measurements

4.1 *Conventional oven.*

4.1.1 *Test energy consumption.* For a conventional oven with a thermostat which operates by cycling on and off, calculate the test energy consumption, E_O, expressed in watt-hours (kJ) for electric ovens and in Btu's (kJ) for gas ovens, and defined as:

$$E_O = E_{AB} + \left[\left(\frac{T_O - T_{AB}}{T_{CD} - T_{AB}}\right) \times \left(E_{CD} - E_{AB}\right)\right]$$

for electric ovens, and,

$$E_O = \left(V_{AB} \times H\right) + \left[\left(\frac{T_O - T_{AB}}{T_{CD} - T_{AB}}\right) \times \left(V_{CD} - V_{AB}\right) \times H\right]$$

For gas ovens

Where:

H = either H_n or H_p, the heating value of the gas used in the test as specified in Section 2.2.2.2 and Section 2.2.2.3, expressed in Btu's per standard cubic foot (kJ/L).

T_O = 234 °F (130 °C) plus the initial test block temperature.

and,

$$E_{AB} = \frac{(E_A + E_B)}{2}, \quad E_{CD} = \frac{(E_C + E_D)}{2}$$

$$V_{AB} = \frac{(V_A + V_B)}{2}, \quad V_{CD} = \frac{(V_C + V_D)}{2}$$

$$T_{AB} = \frac{(T_A + T_B)}{2}, \quad T_{CD} = \frac{(T_C + T_D)}{2}$$

Where:

T_A = block temperature in °F (°C) at the end of the last ''ON'' period of the conventional oven before the test block reaches T_O.

T_B = block temperature in °F (°C) at the beginning of the ''ON'' period following the measurement of T_A.

T_C = block temperature in °F (°C) at the end of the ''ON'' period which starts with T_B.

T_D = block temperature in °F (°C) at the beginning of the ''ON'' period which follows the measurement of T_C.

E_A = electric energy consumed in Wh (kJ) at the end of the last ''ON'' period before the test block reaches T_O.

E_B = electric energy consumed in Wh (kJ) at the beginning of the ''ON'' period following the measurement of T_A.

E_C = electric energy consumed in Wh (kJ) at the end of the ''ON'' period which starts with T_B.

E_D = electric energy consumed in Wh (kJ) at the beginning of the ''ON'' period which follows the measurement of T_C.

V_A = volume of gas consumed in standard cubic feet (L) at the end of the last ''ON'' period before the test block reaches T_O.

V_B = volume of gas consumed in standard cubic feet (L) at the beginning of the ''ON'' period following the measurement of T_A.

V_C = volume of gas consumed in standard cubic feet (L) at the end of the ''ON'' period which starts with T_B.

V_D = volume of gas consumed in standard cubic feet (L) at the beginning of the ''ON'' period which follows the measurement of T_C.

The energy consumed by a continuously operating clock that cannot be disconnected during the test may be subtracted from the oven test energy to obtain the oven test energy consumption, E_O.

4.1.1.1 *Average test energy consumption.* If the conventional oven can be operated with or without forced convection, determine the average test energy consumption, E_O and E_{IO}, in watt-hours (kJ) for electric ovens and Btu's (kJ) for gas ovens using the following equations:

$$E_O = \frac{(E_O)_1 + (E_O)_2}{2}$$

$$E_{IO} = \frac{(E_{IO})_1 + (E_{IO})_2}{2}$$

Where:

$(E_O)_1$=test energy consumption using the forced convection mode in watt-hours (kJ) for electric ovens and in Btu's (kJ) for gas ovens as measured in Section 3.2.1.1.

$(E_O)_2$=test energy consumption without using the forced convection mode in watt-hours (kJ) for electric ovens and in Btu's (kJ) for gas ovens as measured in Section 3.2.1.1.

$(E_{IO})_1$=electrical energy consumption in watt-hours (kJ) of a gas oven in forced convection mode as measured in Section 3.2.1.1. $(E_{IO})_2$=electrical energy consumption in watt-hours (kJ) of a gas oven without using the forced convection mode as measured in Section 3.2.1.1.

The energy consumed by a continuously operating clock that cannot be disconnected during the test may be subtracted from the oven test energy to obtain the average test energy consumption E_O and E_{IO}.

4.1.2 *Conventional oven annual energy consumption.*

4.1.2.1. *Annual cooking energy consumption.*

4.1.2.1.1. *Annual primary energy consumption.* Calculate the annual primary energy consumption for cooking, E_{CO}, expressed in kilowatt-hours (kJ) per year for electric ovens and in Btu's (kJ) per year for gas ovens, and defined as:

$$E_{CO} = \frac{E_O \times K_e \times O_O}{W_l \times C_p \times T_S} \text{ for electric ovens,}$$

Where:

E_O=test energy consumption as measured in Section 3.2.1 or as calculated in Section 4.1.1 or Section 4.1.1.1.

K_e=3.412 Btu/Wh (3.6 kJ/Wh,) conversion factor of watt-hours to Btu's.

O_O=29.3 kWh (105,480 kJ) per year, annual useful cooking energy output of conventional electric oven.

W_l=measured weight of test block in pounds (kg).

C_p=0.23 Btu/lb-°F (0.96 kJ/kg ÷ °C), specific heat of test block.

T_S=234 °F (130 °C), temperature rise of test block.

$$E_{CO} = \frac{E_O \times O_O}{W_l \times C_p \times T_S} \text{ for gas ovens,}$$

Where:

E_O=test energy consumption as measured in Section 3.2.1. or as calculated in Section 4.1.1 or Section 4.1.1.1.

O_O=88.8 kBtu (93,684 kJ) per year, annual useful cooking energy output of conventional gas oven.

W_l, C_p and T_S are the same as defined above.

4.1.2.1.2 *Annual secondary energy consumption for cooking of gas ovens.* Calculate the annual secondary energy consumption for cooking, E_{SO}, expressed in kilowatt-hours (kJ) per year and defined as:

$$E_{SO} = \frac{E_{IO} \times K_e \times O_O}{W_l \times C_p \times T_S},$$

Where:

E_{IO}=electrical test energy consumption as measured in Section 3.2.1 or as calculated in Section 4.1.1.1.

O_O=29.3 kWh (105,480 kJ) per year, annual useful cooking energy output.

K_e, W_l, C_p, and T_S are as defined in Section 4.1.2.1.1.

4.1.2.2 *Annual energy consumption of any continuously burning pilot lights.* Calculate the annual energy consumption of any continuously burning pilot lights, E_{PO}, expressed in Btu's (kJ) per year and defined as:

$E_{PO}=Q_{OP}\times H\times(A-B)$,

or,

$$E_{PO} = \frac{V_{OP}}{t_{OP}} \times H \times (A - B)$$

Where:

Q_{OP}=pilot gas flow rate in standard cubic feet per hour (L/h), as measured in Section 3.2.1.3.

V_{OP}=standard cubic feet (L) of gas consumed by any continuously burning pilot lights, as measured in Section 3.2.1.3.

t_{OP}=elapsed test time in hours for any continuously burning pilot lights tested, as measured in Section 3.2.1.3.

$H=H_n$ or H_p, the heating value of the gas used in the test as specified in Section 2.2.2.2 and Section 2.2.2.3 in Btu's per standard cubic foot (kJ/L).

A=8,760, number of hours in a year.

B=300, number of hours per year any continuously burning pilot lights contribute to the heating of an oven for cooking food.

4.1.2.3 *Annual conventional oven self-cleaning energy.*

4.1.2.3.1 *Annual primary energy consumption.* Calculate the annual primary energy consumption for conventional oven self-cleaning operations, E_{SC}, expressed in kilowatt-hours (kJ) per year for electric ovens and in Btu's (kJ) for gas ovens, and defined as:

$E_{SC}=E_S\times S_e\times K$, for electric ovens,

Where:

E_S=energy consumption in watt-hours, as measured in Section 3.2.1.2.

S_e=4, average number of times a self-cleaning operation of a conventional electric oven is used per year.

K=0.001 kWh/Wh conversion factor for watt-hours to kilowatt-hours.

or

$E_{SC}=V_S\times H\times S_g$, for gas ovens,

Where:

V_S=gas consumption in standard cubic feet (L), as measured in Section 3.2.1.2.

$H=H_n$ or H_p, the heating value of the gas used in the test as specified in Section 2.2.2.2 and Section 2.2.2.3 in Btu's per standard cubic foot (kJ/L).

S_g=4, average number of times a self-cleaning operation of a conventional gas oven is used per year.

The energy consumed by a continuously operating clock that cannot be disconnected during the self-cleaning test procedure may be subtracted from the test energy to obtain the test energy consumption, E_{SC}.

4.1.2.3.2 *Annual secondary energy consumption for self-cleaning operation of gas ovens.* Calculate the annual secondary energy consumption for self-cleaning operations of a gas oven, E_{SS}, expressed in kilowatt-hours (kJ) per year and defined as:

$E_{SS}=E_{IS} \times S_g \times K$,

Where:

E_{IS}=electrical energy consumed during the self-cleaning operation of a conventional gas oven, as measured in Section 3.2.1.2.

S_g=4, average number of times a self-cleaning operation of a conventional gas oven is used per year.

K=0.001 kWh/Wh conversion factor for watt-hours to kilowatt-hours.

4.1.2.4 *Annual clock energy consumption.* Calculate the annual energy consumption of any constantly operating electric clock, E_{CL}, expressed in kilowatt-hours (kJ) per year and defined as:

$E_{CL} = P_{CL} \times A \times K$,

Where:

P_{CL}=power rating of clock which is on continuously, in watts, as measured in Section 3.2.1.4.

A=8,760, number of hours in a year.

K=0.001 kWh/Wh conversion factor for watt-hours to kilowatt-hours.

4.1.2.5 *Total annual energy consumption of a single conventional oven.*

4.1.2.5.1 *Conventional electric oven energy consumption.* Calculate the total annual energy consumption of a conventional electric oven, E_{AO}, expressed in kilowatt-hours (kJ) per year and defined as:

$E_{AO}=E_{CO}+E_{SC}+E_{CL}$,

Where:

E_{CO}=annual primary cooking energy consumption as determined in Section 4.1.2.1.1.

E_{SC}=annual primary self-cleaning energy consumption as determined in Section 4.1.2.3.1.

E_{CL}=annual clock energy consumption as determined in Section 4.1.2.4.

4.1.2.5.2 *Conventional gas oven energy consumption.* Calculate the total annual gas energy consumption of a conventional gas oven, E_{AOG}, expressed in Btu's (kJ) per year and defined as:

$E_{AOG}=E_{CO}+E_{SC}+E_{PO}$,

Where:

E_{CO}=annual primary cooking energy consumption as determined in Section 4.1.2.1.1.

E_{PO}=annual pilot light energy consumption as determined in Section 4.1.2.2.

E_{SC}=annual primary self-cleaning energy consumption as determined in Section 4.1.2.3.1.

If the conventional gas oven uses electrical energy, calculate the total annual electrical energy consumption, E_{AOE}, expressed in kilowatt-hours (kJ) per year and defined as:

$E_{AOE}=E_{SO}+E_{SS}+E_{CL}$,

Where:

E_{SO}=annual secondary cooking energy consumption as determined in Section 4.1.2.1.2.

E_{SS}=annual secondary self-cleaning energy consumption as determined in Section 4.1.2.3.2.

E_{CL}=annual clock energy consumption as determined in Section 4.1.2.4.

4.1.2.6. *Total annual energy consumption of multiple conventional ovens.* If the cooking appliance includes more than one conventional oven, calculate the total annual energy consumption of the conventional ovens using the following equations:

4.1.2.6.1 *Conventional electric oven energy consumption.* Calculate the total annual energy consumption, ETO, in kilowatt-hours (kJ) per year and defined as:

$E_{TO} = E_{ACO} + E_{ASC} + E_{CL}$,

Where:

$$E_{ACO} = \frac{1}{n}\sum_{i=1}^{n}\left(E_{CO}\right)_i,$$

is the average annual primary energy consumption for cooking,

and where:

n = number of conventional ovens in the basic model.

E_{CO} = annual primary energy consumption for cooking as determined in Section 4.1.2.1.1.

$$E_{ASC} = \frac{1}{n}\sum_{i=1}^{n}\left(E_{SC}\right)_i,$$

average annual self-cleaning energy consumption,

Where:

n = number of self-cleaning conventional ovens in the basic model.

E_{SC} = annual primary self-cleaning energy consumption as determined according to Section 4.1.2.3.1.

E_{CL} = clock energy consumption as determined according to Section 4.1.2.4.

4.1.2.6.2 *Conventional gas oven energy consumption.* Calculate the total annual gas energy consumption, E_{TOG}, in Btu's (kJ) per year and defined as:

$E_{TOG} = E_{ACO} + E_{ASC} + E_{TPO}$,

Where:

E_{ACO} = average annual primary energy consumption for cooking in Btu's (kJ) per year and is calculated as:

$$E_{ACO} = \frac{1}{n}\sum_{i=1}^{n}\left(E_{CO}\right)_i,$$

Where:

n = number of conventional ovens in the basic model.

E_{CO} = annual primary energy consumption for cooking as determined in Section 4.1.2.1.1.

and,

E_{ASC} = average annual self-cleaning energy consumption in Btu's (kJ) per year and is calculated as:

$$E_{ASC} = \frac{1}{n}\sum_{i=1}^{n}\left(E_{SC}\right)_i,$$

Where:

n = number of self-cleaning conventional ovens in the basic model.

E_{SC} = annual primary self-cleaning energy consumption as determined according to Section 4.1.2.3.1.

$$E_{TPO} = \sum_{i=1}^{n}\left(E_{PO}\right)_i,$$

total energy consumption of any pilot lights,

Where:

E_{PO} = annual energy consumption of any continuously burning pilot lights determined according to Section 4.1.2.2.

n = number of pilot lights in the basic model.

If the oven also uses electrical energy, calculate the total annual electrical energy consumption, E_{TOE}, in kilowatt-hours (kJ) per year and defined as:

$E_{TOE} = E_{ASO} + E_{AAS} + E_{CL}$,

Where:

$$E_{ASO} = \frac{1}{n}\sum_{i=1}^{n}\left(E_{SO}\right)_i,$$

is the average annual secondary energy consumption for cooking,

Where:

n=number of conventional ovens in the basic model.

E_{SO}=annual secondary energy consumption for cooking of gas ovens as determined in Section 4.1.2.1.2.

$$E_{AAS} = \frac{1}{n}\sum_{i=1}^{n}\left(E_{SS}\right)_i,$$

is the average annual secondary self-cleaning energy consumption,

Where:

n=number of self-cleaning ovens in the basic model.

E_{SS}=annual secondary self-cleaning energy consumption of gas ovens as determined in Section 4.1.2.3.2.

E_{CL}=annual clock energy consumption as determined in Section 4.1.2.4.

4.1.3 *Conventional oven cooking efficiency*.

4.1.3.1 *Single conventional oven*. Calculate the conventional oven cooking efficiency, Eff_{AO}, using the following equations:

For electric ovens:

$$Eff_{AO} = \frac{W_l \times C_p \times T_S}{E_O \times K_e},$$

and,

For gas ovens:

$$Eff_{AO} = \frac{W_l \times C_p \times T_S}{E_O + \left(E_{IO} \times K_e\right)},$$

Where:

W_l=measured weight of test block in pounds (kg).

C_p=0.23 Btu/lb-°F (0.96 kJ/kg÷ °C), specific heat of test block.

T_S=234 °F (130 °C), temperature rise of test block.

E_O=test energy consumption as measured in Section 3.2.1 or calculated in Section 4.1.1 or Section 4.1.1.1.

K_e=3.412 Btu/Wh (3.6 kJ/Wh), conversion factor for watt-hours to Btu's.

E_{IO}=electrical test energy consumption according to Section 3.2.1 or as calculated in Section 4.1.1.1.

4.1.3.2 *Multiple conventional ovens*. If the cooking appliance includes more than one conventional oven, calculate the cooking efficiency for all of the conventional ovens in the appliance, Eff_{TO}, using the following equation:

$$Eff_{TO} = \frac{n}{\sum_{i=1}^{n}\left(\frac{1}{Eff_{AO}}\right)_i},$$

Where:

n=number of conventional ovens in the cooking appliance.

Eff_{AO}=cooking efficiency of each oven determined according to Section 4.1.3.1.

4.1.4 *Conventional oven energy factor*. Calculate the energy factor, or the ratio of useful cooking energy output to the total energy input, R_O, using the following equations:

$$R_O = \frac{O_O}{E_{AO}},$$

For electric ovens,

Where:

O_O=29.3 kWh (105,480 kJ) per year, annual useful cooking energy output.

E_{AO}=total annual energy consumption for electric ovens as determined in Section 4.1.2.5.1.

For gas ovens:

$$R_O = \frac{O_O}{E_{AOG} + \left(E_{AOE} \times K_e\right)},$$

Where:

O_O=88.8 kBtu (93,684 kJ) per year, annual useful cooking energy output.

E_{AOG}=total annual gas energy consumption for conventional gas ovens as determined in Section 4.1.2.5.2.

E_{AOE}=total annual electrical energy consumption for conventional gas ovens as determined in Section 4.1.2.5.2.

K_e=3,412 Btu/kWh (3,600 kJ/kWh), conversion factor for kilowatt-hours to Btu's.

4.2 *Conventional cooking top*

4.2.1 *Conventional cooking top cooking efficiency*

4.2.1.1 *Electric surface unit cooking efficiency*. Calculate the cooking efficiency,

Eff_{SU}, of the electric surface unit under test, defined as:

$$Eff_{SU} = W \times C_p \times \left(\frac{T_{SU}}{K_e \times E_{CT}} \right),$$

Where:

W=measured weight of test block, W_2 or W_3, expressed in pounds (kg).

C_p=0.23 Btu/lb-°F (0.96 kJ/kg÷ °C), specific heat of test block.

T_{SU}=temperature rise of the test block: final test block temperature, T_{CT}, as determined in Section 3.2.2, minus the initial test block temperature, T_I, expressed in °F (°C) as determined in Section 2.7.5.

K_e=3.412 Btu/Wh (3.6 kJ/Wh), conversion factor of watt-hours to Btu's.

E_{CT}=measured energy consumption, as determined according to Section 3.2.2, expressed in watt-hours (kJ).

The energy consumed by a continuously operating clock that cannot be disconnected during the cooktop test may be subtracted from the energy consumption, E_{CT}, as determined in Section 3.2.2.

4.2.1.2 *Gas surface unit cooking efficiency*. Calculate the cooking efficiency, Eff_{SU}, of the gas surface unit under test, defined as:

$$Eff_{SU} = \frac{W_3 \times C_P \times T_{SU}}{E},$$

Where:

W_3=measured weight of test block as measured in Section 3.3.2, expressed in pounds (kg).

C_p and T_{SU} are the same as defined in Section 4.2.1.1.

and,

$E=[V_{CT} - V_{CP} \times H] + (E_{IC} \times K_e)$,

Where:

V_{CT}=total gas consumption in standard cubic feet (L) for the gas surface unit test as measured in Section 3.2.2.

E_{IC}=electrical energy consumed in watt-hours (kJ) by an ignition device of a gas surface unit as measured in Section 3.2.2.

K_e=3.412 Btu/Wh (3.6 kJ/Wh), conversion factor of watt-hours to Btu's.

H=either H_n or H_p, the heating value of the gas used in the test as specified in Section 2.2.2.2 and Section 2.2.2.3, expressed in Btu's per standard cubic foot (kJ/L) of gas.

$V_{CP}=Q_{CP} \times t_{CT}$, pilot consumption, in standard cubic feet (L), during unit test,

Where:

t_{CT}=the elapsed test time as defined in Section 3.2.2.

and

$$Q_{CP} = \frac{V_{CP}}{t_{CP}},$$

(pilot flow in standard cubic feet per hour)

Where:

V_{CP}=any pilot lights gas consumption defined in Section 3.2.2.1.

t_{CP}=elapsed time of the cooking top pilot lights test as defined in Section 3.2.2.1.

4.2.1.3 *Conventional cooking top cooking efficiency*. Calculate the conventional cooking top cooking efficiency, Eff_{CT}, using the following equation:

$$Eff_{CT} = \frac{1}{n} \sum_{i=1}^{n} \left(Eff_{SU} \right)_i,$$

Where:

n=number of surface units in the cooking top.

Eff_{SU}=the efficiency of each of the surface units, as determined according to Section 4.2.1.1 or Section 4.2.1.2.

4.2.2 *Conventional cooking top annual energy consumption*.

4.2.2.1 *Conventional electric cooking top energy consumption*. Calculate the annual energy consumption of an electric cooking top, E_{CA}, in kilowatt-hours (kJ) per year, defined as:

$$E_{CA} = \frac{O_{CT}}{Eff_{CT}},$$

Where:

O_{CT}=173.1 kWh (623,160 kJ) per year, annual useful cooking energy output.

Eff_{CT}=conventional cooking top cooking efficiency as defined in Section 4.2.1.3.

4.2.2.2 *Conventional gas cooking top*

4.2.2.2.1 *Annual cooking energy consumption*. Calculate the annual energy consumption for cooking, E_{CC}, in Btu's (kJ) per year for a gas cooking top, defined as:

$$E_{CC} = \frac{O_{CT}}{Eff_{CT}},$$

Where:

O_{CT}=527.6 kBtu (556,618 kJ) per year, annual useful cooking energy output.

Eff_{CT}=the gas cooking top efficiency as defined in Section 4.2.1.3.

4.2.2.2.2 *Annual energy consumption of any continuously burning gas pilots*. Calculate the annual energy consumption of any continuously burning gas pilot lights of the cooking top, E_{PC}, in Btu's (kJ) per year, defined as:

$E_{PC}=Q_{CP} \times A \times H$,

Where:

Q_{CP}=pilot light gas flow rate as measured in Section 3.2.2.1.

A=8,760 hours, the total number of hours in a year.

H=either H_n or H_p, the heating value of the gas used in the test as specified in Section 2.2.2.2. and Section 2.2.2.3, expressed in Btu's per standard cubic foot (kJ/L) of gas.

4.2.2.2.3 *Total annual energy consumption of a conventional gas cooking top*. Calculate the total annual energy consumption of a conventional gas cooking top, E_{CA}, in Btu's (kJ) per year, defined as:

$E_{CA}=E_{CC} + E_{PC}$,

Where:

E_{CC}=energy consumption for cooking as determined in Section 4.2.2.2.1.

E_{PC}=annual energy consumption of the pilot lights as determined in Section 4.2.2.2.2.

4.2.3 *Conventional cooking top energy factor*. Calculate the energy factor or ratio of useful cooking energy output for cooking to the total energy input, R_{CT}, as follows:

For an electric cooking top, the energy factor is the same as the cooking efficiency as determined according to Section 4.2.1.3.

For gas cooking tops,

$$R_{CT} = \frac{O_{CT}}{E_{CA}},$$

Where:

O_{CT}=527.6 kBtu (556,618 kJ) per year, annual useful cooking energy output of cooking top.

E_{CA}=total annual energy consumption of cooking top determined according to Section 4.2.2.2.3.

4.3 *Combined components*. The annual energy consumption of a kitchen range, e.g. a cooktop and oven combined, shall be the sum of the annual energy consumption of each of its components. The annual energy consumption for other combinations of ovens, cooktops and microwaves will also be treated as the sum of the annual energy consumption of each of its components. The energy factor of a combined component is the sum of the annual useful cooking energy output of each component divided by the sum of the total annual energy consumption of each component.

4.4 *Microwave oven*.

4.4.1 *Microwave oven test energy output*. Calculate the microwave oven test energy output, E_T, in watt-hour's (kJ). The calculation is repeated two or three times as required in section 3.2.3. The average of the E_T's is used for a calculation in section 4.4.3. For calculations specified in units of energy [watt-hours (kJ)], use the equation below:

$$E_T = \frac{C_p M_W (T_2 - T_1) + C_C M_C (T_2 - T_0)}{K_e}$$

Where:

M_W=the measured mass of the test water load, in pounds (g).

M_C=the measured mass of the test container before filling with test water load, in pounds (g).

T_1=the initial test water load temperature, in °F (°C).

T_2=the final test water load temperature, in °F (°C).

T_0=the measured ambient room temperature, in °F (°C).

C_C=0.210 Btu/lb−°F (0.88 kJ/kg · °C), specific heat of test container.

C_p=1.0 Btu/lb−°F (4.187 kJ/kg · °C), specific heat of water.

K_e=3,412 Btu/kWh (3,600 kJ/kWh) conversion factor of kilowatt-hours to Btu's.

4.4.2 *Microwave oven test power output*. Calculate the microwave oven test power output, P_T, in watts (J/s) as specified in Section four, paragraph 12.5 of IEC 705 Amendment 2 See Section 430.22. The calculation is repeated for each test as required in section 3.2.3. The average of the two or three P_T's is used for calculations in section 4.4.4. (See 10 CFR 430.22)

4.4.3 *Microwave oven annual energy consumption*. Calculate the microwave oven annual energy consumption, E_{mo}, in KWh's per year, defined as:

$$E_{MO} = \frac{E_M \times O_M}{E_T}$$

Where:

E_M=the energy consumption as defined in Section 3.2.3.

O_M=79.8 kWh (287,280 kJ) per year, the microwave oven annual useful cooking energy output.

E_T=the test energy as calculated in Section 4.4.1.

4.4.4 *Microwave oven cooking efficiency*. Calculate the microwave oven cooking efficiency, Eff_{MO}, as specified in Section four, paragraph 14 of IEC 705.

4.4.5 *Microwave oven energy factor*. Calculate the energy factor or the ratio of the useful cooking energy output to total energy input on a yearly basis, R_{MO}, defined as:

$$R_{MO} = \frac{O_M}{E_{MO}},$$

Where:

O_M=79.8 kWh (287,280 kJ) per year, annual useful cooking energy output.

E_{MO}=annual total energy consumption as determined in Section 4.4.3.

[62 FR 51981, Oct. 3, 1997]

APPENDIX J TO SUBPART B OF PART 430—UNIFORM TEST METHOD FOR MEASURING THE ENERGY CONSUMPTION OF AUTOMATIC AND SEMI-AUTOMATIC CLOTHES WASHERS

The provisions of this appendix J shall apply to products manufactured after April 13, 2001. The procedures and calculations in sections 3.3, 4.3, and 4.4 of this Appendix need not be performed to determine compliance with the energy conservation standards for clothes washers.

1. Definitions

1.1 *Adaptive control system* means a clothes washer control system, other than an adaptive water fill control system, which is capable of automatically adjusting washer operation or washing conditions based on characteristics of the clothes load placed in the clothes container, without allowing or requiring consumer intervention or actions. The automatic adjustments may, for example, include automatic selection, modification, or control of any of the following: wash water temperature, agitation or tumble cycle time, number of rinse cycles, and spin speed. The characteristics of the clothes load, which could trigger such adjustments, could, for example, consist of or be indicated by the presence of either soil, soap, suds, or any other additive laundering substitute or complementary product.

NOTE: Appendix J does not provide a means for determining the energy consumption of a clothes washer with an adaptive control system. Therefore, pursuant to 10 CFR 430.27, a waiver must be obtained to establish an acceptable test procedure for each such clothes washer.

1.2 *Adaptive water fill control system* means a clothes washer water fill control system which is capable of automatically adjusting the water fill level based on the size or weight of the clothes load placed in the clothes container, without allowing or requiring consumer intervention and/or actions.

1.3 *Bone-dry* means a condition of a load of test cloth which has been dried in a dryer at maximum temperature for a minimum of 10 minutes, removed and weighed before cool down, and then dried again for 10-minute periods until the final weight change of the load is 1 percent or less.

1.4 *Clothes container* means the compartment within the clothes washer that holds the clothes during operation of the machine.

1.5 *Compact* means a clothes washer which has a clothes container capacity of less than 1.6 ft^3 (45 L).

1.6 *Deep rinse cycle* means a rinse cycle in which the clothes container is filled with water to a selected level and the clothes load is rinsed by agitating it or tumbling it through the water.

1.7 *Front-loader clothes washer* means a clothes washer which sequentially rotates or tumbles portions of the clothes load above the water level allowing the clothes load to fall freely back into the water. The principal axis of the clothes container is in a horizontal plane and the access to the clothes container is through the front of the machine.

1.8 *Lockout* means that at least one wash/rinse water temperature combination is not available in the normal cycle that is available in another cycle on the machine.

1.9 *Make-up water* means the amount of fresh water needed to supplement the amount of stored water pumped from the external laundry tub back into the clothes washer when the suds-return feature is activated in order to achieve the required water fill level in the clothes washer.

1.10 *Modified energy factor* means the quotient of the cubic foot (or liter) capacity of the clothes container divided by the total clothes washer energy consumption per cycle, with such energy consumption expressed as the sum of the machine electrical energy consumption, the hot water energy consumption, and the energy required for removal of the remaining moisture in the wash load.

1.11 *Most energy intensive cycle* means the non-normal cycle that uses the most energy for a given wash/rinse temperature combination.

1.12 *Non-normal cycle* means a cycle other than the normal cycle, but does not include any manually selected pre-wash, pre-soak, and extra-rinse option.

1.13 *Nonwater-heating clothes washer* means a clothes washer which does not have an internal water heating device to generate hot water.

1.14 *Normal cycle* means the cycle recommended by the manufacturer for washing cotton and/or linen clothes.

1.15 *Sensor filled* means a water fill control which automatically terminates the fill when the water reaches an appropriate level in the tub.

1.16 *Spray rinse cycle* means a rinse cycle in which water is sprayed onto the clothes load for a definite period of time without maintaining any specific water level in the clothes container.

1.17 *Standard* means a clothes washer which has a clothes container capacity of 1.6 ft^3 (45 L) or greater.

1.18 *Suds-return* means a feature or option on a clothes washer which causes the stored

wash water obtained by utilizing the suds-saver feature to be pumped from the external laundry tub back into the clothes washer.

1.19 *Suds-saver* means a feature or option on a clothes washer which allows the user to store used wash water in an external laundry tub for use with subsequent wash loads.

1.20 *Temperature use factor* means the percentage of the total number of washes a user would wash with a particular wash/rinse temperature setting.

1.21 *Thermostatically controlled water valves* means clothes washer controls that have the ability to sense and adjust the hot and cold supply water.

1.22 *Time filled* means a water fill control which uses a combination of water flow controls in conjunction with time to terminate the water fill cycle.

1.23 *Top-loader-horizontal-axis clothes washer* means a clothes washer which: rotates or tumbles portions of the clothes load above the water level allowing the clothes load to fall freely back into the water with the principal axis in a horizontal plane and has access to the clothes container through the top of the clothes washer.

1.24 *Top-loader-vertical-axis clothes washer* means a clothes washer that: flexes and oscillates the submerged clothes load through the water by means of mechanical agitation or other movement; has a clothes container with the principal axis in a vertical plane; and has access to the clothes container through the top of the clothes washer.

1.25 *Water consumption factor* means the quotient of the total weighted per-cycle water consumption divided by the capacity of the clothes washer.

1.26 *Water-heating clothes washer* means a clothes washer where some or all of the hot water for clothes washing is generated by a water heating device internal to the clothes washer.

2. Testing Conditions

2.1 *Installation*. Install the clothes washer in accordance with manufacturer's instructions.

2.2 *Electrical energy supply*. Maintain the electrical supply at the clothes washer terminal block within 2 percent of 120, 120/240 or 120/208Y volts as applicable to the particular terminal block wiring system as specified by the manufacturer. If the clothes washer has a dual voltage conversion capability, conduct the test at the highest voltage specified by the manufacturer.

2.3 *Supply water*. For nonwater-heating clothes washers not equipped with thermostatically controlled water valves, the temperature of the hot and cold water supply shall be maintained at 100 °F±10 °F (37.8 °C±5.5 °C). For nonwater-heating clothes washers equipped with thermostatically controlled water valves, the temperature of the hot water supply shall be maintained at 140 °F±5 °F (60.0 °C±2.8 °C) and the cold water supply shall be maintained at 60 °F±5 °F (15.6 °C±2.8 °C). For water-heating clothes washers, the temperature of the hot water supply shall be maintained at 140 °F±5 °F (60.0 °C±2.8 °C) and the cold water supply shall not exceed 60 °F (15.6 °C). Water meters shall be installed in both the hot and cold water lines to measure water consumption.

2.3.1 *Supply water requirements for water and energy consumption testing*. For nonwater-heating clothes washers not equipped with thermostatically controlled water valves, the temperature of the hot and cold water supply shall be maintained at 100° ±10 °F (37.8 °C ±5.5 °C). For nonwater-heating clothes washers equipped with thermostatically controlled water valves, the temperature of the hot water supply shall be maintained at 140 °F ±5 °F (60.0 °C ±2.8 °C) and the cold water supply shall be maintained at 60 °F ±5F° (15.6 °C ±2.8 °C). For water-heating clothes washers, the temperature of the hot water supply shall be maintained at 140 °F ±5 °F (60.0 °C ±2.8 °C) and the cold water supply shall not exceed 60 °F (15.6 °C). Water meters shall be installed in both the hot and cold water lines to measure water consumption.

2.3.2 *Supply water requirements for remaining moisture content testing*. For nonwater-heating clothes washers not equipped with thermostatically controlled water valves, the temperature of the hot water supply shall be maintained at 140 °F ±5 °F and the cold water supply shall be maintained at 60 °F ±5 °F. All other clothes washers shall be connected to water supply temperatures as stated in 2.3.1 of this appendix.

2.4 *Water pressure*. The static water pressure at the hot and cold water inlet connections of the machine shall be maintained during the test at 35 pounds per square inch gauge (psig)±2.5 psig (241.3 kPa±17.2 kPa). The static water pressure for a single water inlet connection shall be maintained during the test at 35 psig±2.5 psig (241.3 kPa±17.2 kPa). Water pressure gauges shall be installed in both the hot and cold water lines to measure water pressure.

2.5 *Instrumentation*. Perform all test measurements using the following instruments, as appropriate:

2.5.1 *Weighing scales*.

2.5.1.1 *Weighing scale for test cloth*. The scale shall have a resolution no larger than 0.2 oz (5.7 g) and a maximum error no greater than 0.3 percent of the measured value.

2.5.1.2 *Weighing scale for clothes container capacity measurements*. The scale should have a resolution no larger than 0.50 lbs (0.23 kg) and a maximum error no greater than 0.5 percent of the measured value.

2.5.2 *Watt-hour meter*. The watt-hour meter shall have a resolution no larger than 1 Wh (3.6 kJ) and a maximum error no greater than 2 percent of the measured value for any demand greater than 50 Wh (180.0 kJ).

2.5.3 *Temperature measuring device*. The device shall have an error no greater than ±1 °F (±0.6 °C) over the range being measured.

2.5.4 *Water meter*. The water meter shall have a resolution no larger than 0.1 gallons (0.4 liters) and a maximum error no greater than 2 percent for all water flow rates from 1 gal/min (3.8 L/min) to 5 gal/min (18.9 L/min).

2.5.5 *Water pressure gauge*. The water pressure gauge shall have a resolution no larger than 1 psig (6.9 kPa) and shall have an error no greater than 5 percent of any measured value over the range of 32.5 psig (224.1 kPa) to 37.5 psig (258.6 kPa).

2.6 *Test cloths*.

2.6.1 *Energy test cloth*. The energy test cloth shall be clean and consist of the following:

2.6.1.1 Pure finished bleached cloth, made with a momie or granite weave, which is 50 percent cotton and 50 percent polyester and weighs 5.75 oz/yd^2 (195.0 g/m^2) and has 65 ends on the warp and 57 picks on the fill.

2.6.1.2 Cloth material that is 24 in by 36 in (61.0 cm by 91.4 cm) and has been hemmed to 22 in by 34 in (55.9 cm by 86.4 cm) before washing. The maximum shrinkage after five washes shall not be more than four percent on the length and width.

2.6.1.3 The number of test runs on the same energy test cloth shall not exceed 60 test runs. All energy test cloth must be permanently marked identifying the lot number of the material. Mixed lots of material shall not be used for testing the clothes washers.

2.6.2 *Energy Stuffer Cloth*. The energy stuffer cloths shall be made from energy test cloth material and shall consist of pieces of material that are 12 inches by 12 inches (30.5 cm by 30.5 cm) and have been hemmed to 10 inches by 10 inches (25.4 cm by 25.4 cm) before washing. The maximum shrinkage after five washes shall not be more than four percent on the length and width. The number of test runs on the same energy suffer cloth shall not exceed 60 test runs. All energy stuffer cloth must be permanently marked identifying the lot number of the material. Mixed lots of material shall not be used for testing the clothes washers.

2.7 *Composition of test loads*.

2.7.1 *Seven pound test load*. The seven pound test load shall consist of bone-dry energy test cloths which weigh 7 lbs ±0.07 lbs (3.18 kg ±0.03 kg). Adjustments to the test load to achieve the proper weight can be made by the use of energy stuffer cloths.

2.7.2 *Three pound test load*. The three pound test load shall consist of bone-dry energy test cloths which weigh 3 lbs ±0.03 lbs (1.36 kg ±0.014 kg). Adjustments to the test load to achieve the proper weight can be made by the use of energy stuffer cloths.

2.8 *Use of test loads*.

2.8.1 For a standard size clothes washer, a seven pound load, as described in section 2.7.1, shall be used to test the maximum water fill and a three pound test load, as described in section 2.7.2, shall be used to test the minimum water fill.

2.8.2 For a compact size clothes washer, a three pound test load as described in section 2.7.2 shall be used to test the maximum and minimum water fill levels.

2.8.3 A vertical-axis clothes washer without adaptive water fill control system also shall be tested without a test load for purposes of calculating the energy factor.

2.8.4 The test load sizes to be used to measure remaining moisture content (RMC) are specified in section 3.3.2.

2.8.5 Load the energy test cloths by grasping them in the center, shaking them to hang loosely and then dropping them into the clothes container prior to activating the clothes washer.

2.9 *Preconditioning*. If the clothes washer has not been filled with water in the preceding 96 hours, pre-condition it by running it through a cold rinse cycle and then draining it to ensure that the hose, pump, and sump are filled with water.

2.10 *Wash time (period of agitation or tumble) setting*. If the maximum available wash time in the normal cycle is greater than 9.75 minutes, the wash time shall be not less than 9.75 minutes. If the maximum available wash time in the normal cycle is less than 9.75 minutes, the wash time shall be the maximum available wash time.

2.11 *Agitation speed and spin speed settings*. Where controls are provided for agitation speed and spin speed selections, set them as follows:

2.11.1 For energy and water consumption tests, set at the normal cycle settings. If settings at the normal cycle are not offered, set the control settings to the maximum speed permitted on the clothes washer.

2.11.2 For remaining moisture content tests, see section 3.3.

3. Test Measurements

3.1 *Clothes container capacity*. Measure the entire volume which a dry clothes load could occupy within the clothes container during washer operation according to sections 3.1.1 through 3.1.5.

3.1.1 Place the clothes washer in such a position that the uppermost edge of the clothes container opening is leveled horizontally, so that the container will hold the maximum amount of water.

3.1.2 Line the inside of the clothes container with 2 mil (0.051 mm) plastic sheet. All clothes washer components which occupy space within the clothes container and which are recommended for use with the energy test cycle shall be in place and shall be lined with 2 mil (0.051 mm) plastic sheet to prevent water from entering any void space.

3.1.3 Record the total weight of the machine before adding water.

3.1.4 Fill the clothes container manually with either 60 °F ±5 °F (15.6 °C ±2.8 °C) or 100 °F ±10 °F (37.8 °C ±5.5 °C) water to its uppermost edge. Measure and record the weight of water, W, in pounds.

3.1.5 The clothes container capacity is calculated as follows:

C=W/d.

where:

C=Capacity in cubic feet (or liters).
W=Mass of water in pounds (or kilograms).
d=Density of water (62.0 lbs/ft^3 for 100 °F (993 kg/m^3 for 37.8 °C) or 62.3 lbs/ft^3 for 60 °F (998 kg/m^3 for 15.6 °C)).

3.2 *Test cycle.* Establish the test conditions set forth in section 2 of this Appendix.

3.2.1 A clothes washer that has infinite temperature selections shall be tested at the following temperature settings: hottest setting available on the machine, hot (a minimum of 140 °F (60.0 °C) and a maximum of 145 °F (62.8 °C)), warm (a minimum of 100 °F (37.8 °C) and a maximum of 105 °F (40.6 °C)), and coldest setting available on the machine. These temperatures must be confirmed by measurement using a temperature measuring device. If the measured final water temperature is not within the specified range, stop testing, adjust the temperature selector accordingly, and repeat the procedure.

3.2.2 *Clothes washers with adaptive water fill control system and/or unique temperature selections.*

3.2.2.1 *Clothes washers with adaptive water fill control system.* When testing a clothes washer that has adaptive water fill control, the maximum and the minimum test loads as specified in 2.8.1 and 2.8.2 shall be used. The amount of water fill shall be determined by the control system. If the clothes washer provides consumer selection of variable water fill amounts for the adaptive water fill control system, two complete sets of tests shall be conducted. The first set of tests shall be conducted with the adaptive water fill control system set in the setting that will use the greatest amount of energy. The second set of tests shall be conducted with the adaptive water fill control system set in the setting that will use the smallest amount of energy. Then, the results from these two tests shall be averaged to determine the adaptive water fill energy consumption value. If a clothes washer with an adaptive water fill control system allows consumer selection of manual controls as an alternative, both the manual and adaptive modes shall be tested and the energy consumption values, E_T, M_E, and D_E (if desired), calculated in section 4 for each mode, shall be averaged between the manual and adaptive modes.

3.2.2.2 *Clothes washers with multiple warm wash temperature combination selections.*

3.2.2.2.1 If a clothes washer's temperature combination selections are such that the temperature of each warm wash setting that is above the mean warm wash temperature (the mean temperature of the coldest and warmest warm settings) is matched by a warm wash setting that is an equal distance below the mean, then the energy test shall be conducted at the mean warm wash temperature if such a selection is provided, or if there is no position on the control that permits selection of the mean temperature, the energy test shall be conducted with the temperature selection set at the next hotter temperature setting that is available above the mean.

3.2.2.2.2 If the multiple warm wash temperature combination selections do not meet criteria in section 3.2.2.2.1, the energy test shall be conducted with the temperature selection set at the warm wash temperature setting that gives the next higher water temperature than the mean temperature of the coldest and warmest warm settings.

3.2.2.3 *Clothes washers with multiple temperature settings within a temperature combination selection.* When a clothes washer is provided with a secondary control that can modify the wash or rinse temperature within a temperature combination selection, the secondary control shall be set to provide the hottest wash temperature available and the hottest rinse temperature available. For instance, when the temperature combination selection is set for the middle warm wash temperature and a secondary control exists which allows this temperature to be increased or decreased, the secondary control shall be set to provide the hottest warm wash temperature available for the middle warm wash setting.

3.2.3 *Clothes washers that do not lockout any wash/rinse temperature combinations in the normal cycle.* Test in the normal cycle all temperature combination selections that are required to be tested.

3.2.3.1 *Hot water consumption, cold water consumption, and electrical energy consumption at maximum fill.* Set the water level selector at maximum fill available on the clothes washer, if manually controlled, and insert the appropriate test load, if applicable. Activate the normal cycle of the clothes washer and also any suds-saver switch.

3.2.3.1.1 For automatic clothes washers, set the wash/rinse temperature selector to the hottest temperature combination setting. For semi-automatic clothes washers, open the hot water faucet valve completely and close the cold water faucet valve completely to achieve the hottest temperature combination setting.

3.2.3.1.2 Measure the electrical energy consumption of the clothes washer for the complete cycle.

3.2.3.1.3 Measure the respective number of gallons (or liters) of hot and cold water used to fill the tub for the wash cycle.

3.2.3.1.4 Measure the respective number of gallons (or liters) of hot and cold water used for all deep rinse cycles.

3.2.3.1.5 Measure the respective gallons (or liters) of hot and cold water used for all spray rinse cycles.

3.2.3.1.6 For non-water-heating automatic clothes washers repeat sections 3.2.3.1.3 through 3.2.3.1.5 for each of the other wash/rinse temperature selections available that uses heated water and is required to be tested. For water-heating clothes washers, repeat sections 3.2.3.1.2 through 3.2.3.1.5 for each of the other wash/rinse temperature selections available that uses heated water and is required to be tested. (When calculating water consumption under section 4.3 for any machine covered by the previous two sentences, also test the cold wash/cold rinse selection.) For semi-automatic clothes washers, repeat sections 3.2.3.1.3 through 3.2.3.1.5 for the other wash/rinse temperature settings in section 6 with the following water faucet valve adjustments:

	Faucet position	
	Hot valve	Cold valve
Hot	Completely open	Closed.
Warm	Completely open	Completely open.
Cold	Closed	Completely open.

3.2.3.1.7 If the clothes washer is equipped with a suds-saver cycle, repeat sections 3.2.3.1.2 to 3.2.3.1.5 with suds-saver switch set to suds return for the Warm/Cold temperature setting.

3.2.3.2 *Hot water consumption, cold water consumption, and electrical energy consumption with the water level selector at minimum fill.* Set the water level selector at minimum fill, if manually controlled, and insert the appropriate test load, if applicable. Activate the normal cycle of the clothes washer and also any suds-saver switch. Repeat sections 3.2.3.1.1 through 3.2.3.1.7.

3.2.3.3 *Hot and cold water consumption for clothes washers that incorporate a partial fill during the rinse cycle.* For clothes washers that incorporate a partial fill during the rinse cycle, activate any suds-saver switch and operate the clothes washer for the complete normal cycle at both the maximum water fill level and the minimum water fill level for each of the wash/rinse temperature selections available. Measure the respective hot and cold water consumed during the complete normal cycle.

3.2.4 *Clothes washers that lockout any wash/rinse temperature combinations in the normal cycle.* In addition to the normal cycle tests in section 3.2.3, perform the following tests on non-normal cycles for each wash/rinse temperature combination selection that is locked out in the normal cycle.

3.2.4.1 Set the cycle selector to a non-normal cycle which has the wash/rinse temperature combination selection that is locked out. Set the water level selector at maximum fill and insert the appropriate test load, if applicable. Activate the cycle of the clothes washer and also any suds-saver switch. Set the wash/rinse temperature selector to the temperature combination setting that is locked out in the normal cycle and repeat sections 3.2.3.1.2 through 3.2.3.1.5.

3.2.4.2 Repeat section 3.2.4.1 under the same temperature combination setting for all other untested non-normal cycles on the machine that have the wash/rinse temperature combination selection that is locked out.

3.2.4.3 Total the measured hot water consumption of the wash, deep rinse, and spray rinse of each non-normal cycle tested in sections 3.2.4.1 through 3.2.4.2 and compare the total for each cycle. The cycle that has the highest hot water consumption shall be the most energy intensive cycle for that particular wash/rinse temperature combination setting.

3.2.4.4 Set the water level selector at minimum fill and insert the appropriate test load, if applicable. Activate the most energy intensive cycle, as determined in section 3.2.4.3, of the clothes washer and also any suds-saver switch. Repeat tests as described in section 3.2.4.1.

3.3 *Remaining Moisture Content (RMC).*

3.3.1 The wash temperature shall be the same as the rinse temperature for all testing. Cold rinse is the coldest rinse temperature available on the machine. Warm rinse is the hottest rinse temperature available on the machine.

3.3.2 Determine the test load as shown in the following table:

Container volume		Test load	
cu. ft. ≥ <	liter ≥ <	lb	kg
0–0.80	0–22.7	3.00	1.36
0.80–0.90	22.7–25.5	3.50	1.59
0.90–1.00	25.5–28.3	3.90	1.77
1.00–1.10	28.3–31.1	4.30	1.95
1.10–1.20	31.1–34.0	4.70	2.13
1.20–1.30	34.0–36.8	5.10	2.31

Container volume		Test load	
cu. ft. ≥ <	liter ≥ <	lb	kg
1.30–1.40	36.8–39.6	5.50	2.49
1.40–1.50	39.6–42.5	5.90	2.68
1.50–1.60	42.5–45.3	6.40	2.90
1.60–1.70	45.3–48.1	6.80	3.08
1.70–1.80	48.1–51.0	7.20	3.27
1.80–1.90	51.0–53.8	7.60	3.45
1.90–2.00	53.8–56.6	8.00	3.63
2.00–2.10	56.6–59.5	8.40	3.81
2.10–2.20	59.5–62.3	8.80	3.99
2.20–2.30	62.3–65.1	9.20	4.17
2.30–2.40	65.1–68.0	9.60	4.35
2.40–2.50	68.0–70.8	10.00	4.54
2.50–2.60	70.8–73.6	10.50	4.76
2.60–2.70	73.6–76.5	10.90	4.94
2.70–2.80	76.5–79.3	11.30	5.13
2.80–2.90	79.3–82.1	11.70	5.31
2.90–3.00	82.1–85.0	12.10	5.49
3.00–3.10	85.0–87.8	12.50	5.67
3.10–3.20	87.8–90.6	12.90	5.85
3.20–3.30	90.6–93.4	13.30	6.03
3.30–3.40	93.4–96.3	13.70	6.21
3.40–3.50	96.3–99.1	14.10	6.40
3.50–3.60	99.1–101.9	14.60	6.62
3.60–3.70	101.9–104.8	15.00	6.80
3.70–3.80	104.8–107.6	15.40	6.99

NOTES: (1) All test load weights are bone dry weights.
(2) Allowable tolerance on the test load weights are ±0.10 lbs (0.05 kg).

3.3.3 For clothes washers with cold rinse only.

3.3.3.1 Record the actual bone dry weight of the test load (WI), then place the test load in the clothes washer.

3.3.3.2 Set water level selector to maximum fill.

3.3.3.3 Run the normal cycle.

3.3.3.4 Record the weight of the test load immediately after completion of the normal cycle (WC).

3.3.3.5 Calculate the remaining moisture content of the test load, RMC, expressed as a percentage and defined as:

$$RMC=[(WC-WI)/WI]\times 100\%$$

3.3.4 For clothes washers with cold and warm rinse options.

3.3.4.1 Complete steps 3.3.3.1 through 3.3.3.4 for the cold rinse. Calculate the remaining moisture content of the test load for cold rinse, RMC_{COLD}, expressed as a percentage and defined as:

$$RMC_{COLD}=[(WC-WI)/WI]\times 100\%$$

3.3.4.2 Complete steps 3.3.3.1 through 3.3.3.4 for the warm rinse. Calculate the remaining moisture content of the test load for warm rinse, RMC_{WARM}, expressed as a percentage and defined as:

$$RMC_{WARM}=[(WC-WI)/WI]\times 100\%$$

3.3.4.3 Calculate the remaining moisture content of the test load, RMC, expressed as a percentage and defined as:

$$RMC=0.73\times RMC_{COLD}+0.27\times RMC_{WARM}$$

3.3.5 Clothes washers which have options that result in different RMC values, such as multiple selection of spin speeds or spin times that are available in the normal cycle, shall be tested at the maximum and minimum settings of the available options, excluding any ''no spin'' (zero spin speed) settings, in accordance with requirements in 3.3.3 or 3.3.4. The calculated $RMC_{max\ extraction}$ and $RMC_{min\ extraction}$ at the maximum and minimum settings, respectively, shall be combined as follows and the final RMC to be used in section 4.2 shall be:

$$RMC=0.75\times RMC_{max\ extraction}+0.25\times RMC_{min\ extraction}$$

3.4 *Data recording*. Record for each test cycle in sections 3.2.1 through 3.3.5.

3.4.1 For non-water-heating clothes washers, record the kilowatt-hours of electrical energy, M_E, consumed during the test to operate the clothes washer in section 3.2.3.1.2. For water-heating clothes washers record the kilowatt-hours of electrical energy, Eh_i consumed at maximum fill in sections 3.2.3.1.2 and 3.2.3.1.6, and Eh_j consumed at minimum fill in section 3.2.3.2.

3.4.2 Record the individual gallons (or liters) of hot and cold water consumption, Vh_i and Vc_i, measured at maximum fill level for each wash/rinse temperature combination setting tested in section 3.2.3, or in both 3.2.3 and 3.2.4, excluding any fresh make-up water required to complete the fill during a suds-return cycle.

3.4.3 Record the individual gallons (or liters) of hot and cold water consumption, Vh_j and Vc_j, measured at minimum fill level for each wash/rinse temperature combination setting tested in section 3.2.3, or in both 3.2.3 and 3.2.4, excluding any fresh make-up water required to complete the fill during a suds-return cycle.

3.4.4 Record the individual gallons (or liters) of hot and cold water, Sh_H and Sc_H, measured at maximum fill for the suds-return cycle.

3.4.5 Record the individual gallons (or liters) of hot and cold water, Sh_L and Sc_L, measured at minimum fill for the suds-return cycle.

3.4.6 Data recording requirements for RMC tests are listed in sections 3.3.3 through 3.3.5.

4. Calculation of Derived Results From Test Measurements

4.1 *Energy consumption*.

4.1.1 *Per-cycle temperature-weighted hot water consumption for maximum and minimum water fill levels*. Calculate for the cycle under test the per-cycle temperature weighted hot water consumption for the maximum water fill level, Vh_{max}, and for the minimum water fill level, Vh_{min}, expressed in gallons per cycle (or liters per cycle) and defined as:

$$Vh_{max} = X_1 \sum_{i=1}^{n} \left[\left(Vh_i \times L \right) \times TUF_i \right] + X_2 \left[TUF_W \times Sh_H \right]$$

$$Vh_{min} = X_1 \sum_{j=1}^{n} \left[\left(Vh_j \times L \right) \times TUF_j \right] + X_2 \left[TUF_W \times Sh_L \right]$$

where:

Vh_i=reported hot water consumption in gallons per cycle (or liters per cycle) at maximum fill for each wash/rinse temperature combination setting, as provided in section 3.4.2. If a clothes washer is equipped with two or more different wash/rinse temperature selections that have the same basic temperature combination selection label (for example, one of them has its water temperature controlled by thermostatically controlled valves and the other one does not), then the largest Vh_i shall be used for this calculation. If a clothes washer has lockout(s), there will be ''Vh_i's'' for wash/rinse temperature combination settings available in the normal cycle and ''Vh_i's'' for wash/rinse temperature combination settings in the most energy intensive cycle.

Vh_j=reported hot water consumption in gallons per cycle (or liters per cycle) at minimum fill for each wash/rinse temperature combination setting, as provided in section 3.4.3. If a clothes washer is equipped with two or more different wash/rinse temperature selections that have the same basic temperature combination selection label (for example, one of them has its water temperature controlled by thermostatically controlled valves and the other one does not), then the largest Vh_j shall be used for the calculation. If a clothes washer has lockouts, there will be ''Vh_j's'' for wash/rinse temperature combination settings available in the normal cycle and ''Vh_j's'' for wash/rinse temperature combination settings in the most energy intensive cycle.

L=lockout factor to be applied to the reported hot water consumption. For wash/rinse temperature combination settings that are not locked out in the normal cycle, L=1. For each wash/rinse temperature combination setting that is locked out in the normal cycle, L=0.32 in the normal cycle and L=0.68, in the most energy intensive cycle.

TUF_i=applicable temperature use factor in section 5 or 6.

TUF_j=applicable temperature use factor in section 5 or 6.

n=number of wash/rinse temperature combination settings available to the user for the clothes washer under test. For clothes washers that lockout temperature selections in the normal cycle, n=the number of wash/rinse temperature combination settings on the washers plus the number of wash/rinse temperature combination settings that lockout the temperature selections in the normal cycle.

TUF_w=temperature use factor for warm wash setting.

For clothes washers equipped with the suds-saver feature:

X_1=frequency of use without the suds-saver feature=0.86.

X_2=frequency of use with the suds-saver feature=0.14.

Sh_H=fresh make-up water measured during suds-return cycle at maximum water fill level.

Sh_L=fresh hot make-up water measured during suds-return cycle at minimum water fill level.

For clothes washers not equipped with the suds-saver feature:

X_1=1.0

X_2=0.0

4.1.2 *Total per-cycle hot water energy consumption for maximum and minimum water fill levels.* Calculate the total per-cycle hot water energy consumption for the maximum water fill level, E_{max} and for the minimum water fill level, E_{min}, expressed in kilowatt-hours per cycle and defined as:

$E_{max}=[Vh_{max} \times T \times K \times MF]$

$E_{min}=[Vh_{min} \times T \times K \times MF]$

where:

T=temperature rise=90 °F (50 °C).

K=water specific heat=0.00240 kWh/(gal– °F) [0.00114kWh/(L– °C)].

Vh_{max}=as defined in section 4.1.1.

Vh_{min}=as defined in section 4.1.1.

MF=multiplying factor to account for absence of test load=0.94 for top-loader vertical axis clothes washers that are sensor filled, 1.0 for all other clothes washers.

4.1.3 *Total weighted per-cycle hot water energy consumption expressed in kilowatt-hours.* Calculate the total weighted per cycle hot water energy consumption, E_T, expressed in kilowatt-hours per cycle and defined as:

$E_T=[E_{max} \times F_{max}]+[E_{min} \times F_{min}]$

where:

F_{max}=usage fill factor=0.72.
F_{min}=usage fill factor=0.28.
E_{max}=as defined in section 4.1.2.
E_{min}=as defined in section 4.1.2.

4.1.4 *Per-cycle water energy consumption using gas-heated or oil-heated water*. Calculate for the normal cycle the per-cycle energy consumption, E_{TG}, using gas-heated or oil-heated water, expressed in Btu per cycle (or megajoules per cycle) and defined as:

$$E_{TG} = E_T \times \frac{1}{e} \times \left[\frac{3412\ \text{Btu}}{\text{kWh}}\right] \text{ or } E_{TG} = E_T \times \frac{1}{e} \times \left[\frac{3.6\ \text{MJ}}{\text{kWh}}\right]$$

where:

e=nominal gas or oil water heater efficiency=0.75.
E_T=as defined in section 4.1.3.

4.1.5 *Per-cycle machine electrical energy consumption*.

4.1.5.1 *Non-water-heating clothes washers*. The electrical energy value recorded for the maximum fill in section 3.4.1 is the per-cycle machine electrical energy consumption, M_E, expressed in kilowatt-hours per cycle.

4.1.5.2 *Water-heating clothes washers*.

4.1.5.2.1 Calculate for the cycle under test the per-cycle temperature weighted electrical energy consumption for the maximum water fill level, Eh_{max}, and for the minimum water fill level, Eh_{min}, expressed in kilowatt-hours per cycle and defined as:

$$Eh_{max} = \sum_{i=1}^{n} \left[Eh_i \times TUF_i\right]$$

where:

Eh_i=reported electrical energy consumption in kilowatt-hours per cycle at maximum fill for each wash/cycle temperature combination setting, as provided in section 3.4.1.
TUF_i=applicable temperature use factor in section 5 or 6.
n=number of wash/rinse temperature combination settings available to the user for the clothes washer under test.

and

$$Eh_{min} = \sum_{j=1}^{n} \left[Eh_j \times TUF_j\right]$$

where:

Eh_j=reported electrical energy consumption in kilowatt-hours per cycle at minimum fill for each wash/rinse temperature combination setting, as provided in section 3.4.1.
TUF_j=applicable temperature use factor in section 5 or 6.
n=as defined above in this section.

4.1.5.2.2 *Weighted per-cycle machine electrical energy consumption*. Calculate the weighted per cycle machine energy consumption, M_E, expressed in kilowatt-hours per cycle and defined as:

$M_E=[Eh_{max} \times F_{max}]+[Eh_{min} \times F_{min}]$

where:

F_{max}=as defined in section 4.1.3.
F_{min}=as defined in section 4.1.3.
Eh_{max}=as defined in section 4.1.5.2.1.
Eh_{min}=as defined in section 4.1.5.2.1

4.1.6 *Total per-cycle energy consumption when electrically heated water is used*. Calculate for the normal cycle the total per-cycle energy consumption, E_{TE}, using electrically heated water, expressed in kilowatt-hours per cycle and defined as:

$E_{TE}=E_T+M_E$

where:

E_T=as defined in section 4.1.3.
M_E=as defined in section 4.1.5.1 or 4.1.5.2.2.

4.2 *Per-cycle energy consumption for removal of RMC*. Calculate the amount of energy per cycle required to remove RMC. Such amount is D_E, expressed in kilowatt-hours per cycle and defined as:

D_E=(LAF)×(test load weight)×(RMC−4%)×(DEF)×(DUF)

where:

LAF=load adjustment factor=0.52.
Test load weight=as shown in test load table in 3.3.2 expressed in lbs/cycle.
RMC=as defined in 3.3.3.5, 3.3.4.3, or 3.3.5.
DEF=nominal energy required for a clothes dryer to remove moisture from clothes=0.5 kWh/lb (1.1 kWh/kg).
DUF=dryer usage factor, percentage of washer loads dried in a clothes dryer=0.84.

4.3 *Water consumption*.

4.3.1 *Per-cycle temperature-weighted water consumption for maximum and minimum water fill levels*. To determine these amounts, calculate for the cycle under test the per-cycle temperature-weighted total water consumption for the maximum water fill level, Q_{max}, and for the minimum water fill level, Q_{min},

expressed in gallons per cycle (or liters per cycle) and defined as:

$$Q_{max} = X_1 \sum_{i=1}^{n} \left[\left(Vh_i + Vc_i \right) \times TUF_i \right] + X_2 \left[TUF_w \times \left(Sh_H + Sc_H \right) \right]$$

where:

Vh_i=hot water consumption in gallons per-cycle at maximum fill for each wash/rinse temperature combination setting, as provided in section 3.4.2.

Vc_i=total cold water consumption in gallons per-cycle at maximum fill for each wash/rinse temperature combination setting, cold wash/cold rinse cycle, as provided in section 3.4.2.

TUF_i=applicable temperature use factor in section 5 or 6.

n=number of wash/rinse temperature combination settings available to the user for the clothes washer under test.

TUF_w=temperature use factor for warm wash setting.

For clothes washers equipped with suds-saver feature:

X_1=frequency of use without suds-saver feature=0.86

X_2=frequency of use with suds-saver feature=0.14

Sh_H=fresh hot water make-up measured during suds-return cycle at maximum water fill level.

Sc_H=fresh cold water make-up measured during suds-return cycle at maximum water fill level.

For clothes washers not equipped with suds-saver feature:

X_1=1.0

X_2=0.0

and

$$Q_{min} = X_1 \sum_{j=1}^{n} \left[\left(Vh_j + Vc_j \right) \times TUF_j \right] + X_2 \left[TUF_w \times \left(Sh_L + Sc_L \right) \right]$$

where:

Vh_j=hot water consumption in gallons per cycle (or liters per cycle) at minimum fill for each wash/rinse temperature combination setting, as provided in section 3.4.3.

Vc_j=cold water consumption in gallons per cycle (or liters per cycle) at minimum fill for each wash/rinse temperature combination setting, cold wash/cold rinse cycle, as provided in section 3.4.3.

TUF_j=applicable temperature use factor in section 5 or 6.

Sh_L=fresh hot make-up water measured during suds-return cycle at minimum water fill level.

Sc_L=fresh cold make-up water measured during suds-return cycle at minimum water fill level.

n=as defined above in this section.

TUF_w=as defined above in this section.

X_1=as defined above in this section.

X_2=as defined above in this section.

4.3.2 *Total weighted per-cycle water consumption*. To determine this amount, calculate the total weighted per cycle water consumption, Q_T, expressed in gallons per cycle (or liters per cycle) and defined as:

$Q_T=[Q_{max} \times F_{max}]+[Q_{min} \times F_{min}]$

where:

F_{max}=as defined in section 4.1.3.

F_{min}=as defined in section 4.1.3.

Q_{max}=as defined in section 4.3.1.

Q_{min}=as defined in section 4.3.1.

4.3.3 *Water consumption factor*. The following calculates the water consumption factor, WCF, expressed in gallon per cycle per cubic foot (or liter per cycle per liter):

$WCF=Q_T/C$

where:

C=as defined in section 3.1.5.

Q_T=as defined in section 4.3.2.

4.4 *Modified energy factor*. The following calculates the modified energy factor, MEF, expressed in cubic feet per kilowatt-hours per cycle (or liters per kilowatt-hours per cycle):

$$MEF = \frac{C}{\left(M_E + E_T + D_E \right)}$$

where:

C=as defined in section 3.1.5.
M_E=as defined in section 4.1.5.1 or 4.1.5.2.2.
E_T=as defined in section 4.1.3.
D_E=as defined in section 4.2.

4.5 *Energy factor*. Calculate the energy factor, EF, expressed in cubic feet per kilowatt-hours per cycle (or liters per kilowatt-hours per cycle), as:

$$EF = \frac{C}{(M_E + E_T)}$$

where:

C=as defined in section 3.1.5.
M_E=as defined in section 4.1.5.1 or 4.1.5.2.2.
E_T=as defined in section 4.1.3.

5. Applicable Temperature Use Factors for Determining Hot Water Usage for Various Wash/Rinse Temperature Selections for All Automatic Clothes Washers

5.1 *Clothes washers with discrete temperature selections.*

5.1.1 *Five-temperature selection (n=5).*

Wash/rinse temperature setting	Temperature Use Factor (TUF)
Hot/Warm	0.18
Hot/Cold	.12
Warm/Warm	.30
Warm/Cold	.25
Cold/Cold	.15

5.1.2 *Four-temperature selection (n=4).*

Wash/rinse temperature setting	Temperature Use Factor (TUF)
Alternate I:	
Hot/Warm	0.18
Hot/Cold	.12
Warm/Cold	.55
Cold/Cold	.15
Alternate II:	
Hot/Warm	0.18
Hot/Cold	.12
Warm/Warm	.30
Warm/Cold	.40
Alternate III:	
Hot/Cold	0.12
Warm/Warm	.18
Warm/Cold	.55
Cold/Cold	.15

5.1.3 *Three-temperature selection (n=3).*

Wash/rinse temperature setting	Temperature Use Factor (TUF)
Alternate I:	
Hot/Warm	0.30
Warm/Cold	.55
Cold/Cold	.15
Alternate II:	
Hot/Cold	0.30
Warm/Cold	.55
Cold/Cold	.15
Alternate III:	
Hot/Cold	0.30
Warm/Warm	.55
Cold/Cold	.15

5.1.4 *Two-temperature selection (n=2).*

Wash/rinse temperature setting	Temperature Use Factor (TUF)
Any heated water/Cold	0.85
Cold/Cold	.15

5.1.5 *One-temperature selection (n=1).*

Wash/rinse temperature setting	Temperature Use Factor (TUF)
Any	1.00

5.2 *Clothes washers with infinite temperature selections.*

Wash/rinse temperature setting	Temperature Use Factor (TUF)	
	≤ 140 °F (60 °C) (n=3)	> 140 °F (60 °C) (n=4)
Extra-hot	.....	0.05
Hot	0.30	0.25
Warm	0.55	0.55
Cold	0.15	0.15

6. Applicable Temperature Use Factors for Determining Hot Water Usage for Various Wash/Rinse Temperature Settings for All Semi-Automatic, Non-Water-Heating, Clothes Washers

6.1 *Six-temperature settings (n=6).*

Wash/rinse temperature setting	Temperature Use Factor (TUF)
Hot/Hot	0.15
Hot/Warm	.09
Hot/Cold	.06
Warm/Warm	.42
Warm/Cold	.13
Cold/Cold	.15

7. Waivers and Field Testing

7.1 *Waivers and Field Testing for Non-conventional Clothes Washers.* Manufacturers of non-conventional clothes washers, such as clothes washers with adaptive control systems, must submit a petition for waiver pursuant to 10 CFR 430.27 to establish an acceptable test procedure for that clothes washer. For these and other clothes washers that have controls or systems such that the DOE test procedures yield results that are so unrepresentative of the clothes washer's true energy consumption characteristics as to provide materially inaccurate comparative

data, field testing may be appropriate for establishing an acceptable test procedure. The following are guidelines for field testing which may be used by manufacturers in support of petitions for waiver. These guidelines are not mandatory and the Department may determine that they do not apply to a particular model. Depending upon a manufacturer's approach for conducting field testing, additional data may be required. Manufacturers are encouraged to communicate with the Department prior to the commencement of field tests which may be used to support a petition for waiver. Section 7.3 provides an example of field testing for a clothes washer with an adaptive water fill control system. Other features, such as the use of various spin speed selections, could be the subject of field tests.

7.2 *Non-conventional Wash System Energy Consumption Test.* The field test may consist of a minimum of 10 of the nonconventional clothes washers (''test clothes washers'') and 10 clothes washers already being distributed in commerce (''base clothes washers''). The tests should include a minimum of 50 normal test cycles per clothes washer. The test clothes washers and base clothes washers should be identical in construction except for the controls or systems being tested. Equal numbers of both the test clothes washer and the base clothes washer should be tested simultaneously in comparable settings to minimize seasonal and/or consumer laundering conditions and/or variations. The clothes washers should be monitored in such a way as to accurately record the total energy consumption per cycle. At a minimum, the following should be measured and recorded throughout the test period for each clothes washer: Hot water usage in gallons (or liters), electrical energy usage in kilowatt-hours, and the cycles of usage. The field test results would be used to determine the best method to correlate the rating of the test clothes washer to the rating of the base clothes washer. If the base clothes washer is rated at A kWh per year, but field tests at B kWh per year, and the test clothes washer field tests at D kWh per year, the test unit would be rated as follows:

$A \times (D/B) = G$ kWh per year

7.3 *Adaptive water fill control system field test.* Section 3.2.2.1 defines the test method for measuring energy consumption for clothes washers which incorporate control systems having both adaptive and alternate manual selections. Energy consumption calculated by the method defined in section 3.2.2.1 assumes the adaptive cycle will be used 50 percent of the time. This section can be used to develop field test data in support of a petition for waiver when it is believed that the adaptive cycle will be used more than 50 percent of the time. The field test sample size should be a minimum of 10 test clothes washers. The test clothes washers should be totally representative of the design, construction, and control system that will be placed in commerce. The duration of field testing in the user's house should be a minimum of 50 normal test cycles, for each unit. No special instructions as to cycle selection or product usage should be given to the field test participants, other than inclusion of the product literature pack which should be shipped with all units, and instructions regarding filling out data collection forms, use of data collection equipment, or basic procedural methods. Prior to the test clothes washers being installed in the field test locations, baseline data should be developed for all field test units by conducting laboratory tests as defined by section 1 through section 6 of these test procedures to determine the energy consumption values. The following data should be measured and recorded for each wash load during the test period: wash cycle selected, the mode of the clothes washer (adaptive or manual), clothes load dry weight (measured after the clothes washer and clothes dryer cycles are completed) in pounds, and type of articles in the clothes load (i.e., cottons, linens, permanent press, etc.). The wash loads used in calculating the in-home percentage split between adaptive and manual cycle usage should be only those wash loads which conform to the definition of the normal test cycle.

Calculate:

T=The total number of normal test cycles run during the field test

T_a=The total number of adaptive control normal test cycles

T_m=The total number of manual control normal test cycles

The percentage weighting factors:

$P_a=(T_a/T) \times 100$ (the percentage weighting for adaptive control selection)

$P_m=(T_m/T) \times 100$ (the percentage weighting for manual control selection)

Energy consumption values, E_T, M_E, and D_E (if desired) calculated in section 4 for the manual and adaptive modes, should be combined using P_a and P_m as the weighting factors.

8. Sunset

The provisions of this appendix J expire on December 31, 2003.

[62 FR 45501, Aug. 27, 1997, as amended at 66 FR 3330, Jan. 12, 2001; 66 FR 8745, Feb. 2, 2001]

APPENDIX J1 TO SUBPART B OF PART 430—UNIFORM TEST METHOD FOR MEASURING THE ENERGY CONSUMPTION OF AUTOMATIC AND SEMI-AUTOMATIC CLOTHES WASHERS

The provisions of this appendix J1 shall apply to products manufactured beginning January 1, 2004.

1. Definitions and Symbols

1.1 *Adaptive control system* means a clothes washer control system, other than an adaptive water fill control system, which is capable of automatically adjusting washer operation or washing conditions based on characteristics of the clothes load placed in the clothes container, without allowing or requiring consumer intervention or actions. The automatic adjustments may, for example, include automatic selection, modification, or control of any of the following: wash water temperature, agitation or tumble cycle time, number of rinse cycles, and spin speed. The characteristics of the clothes load, which could trigger such adjustments, could, for example, consist of or be indicated by the presence of either soil, soap, suds, or any other additive laundering substitute or complementary product.

NOTE: Appendix J1 does not provide a means for determining the energy consumption of a clothes washer with an adaptive control system. Therefore, pursuant to 10 CFR 430.27, a waiver must be obtained to establish an acceptable test procedure for each such clothes washer.

1.2 *Adaptive water fill control system* means a clothes washer water fill control system which is capable of automatically adjusting the water fill level based on the size or weight of the clothes load placed in the clothes container, without allowing or requiring consumer intervention or actions.

1.3 *Bone-dry* means a condition of a load of test cloth which has been dried in a dryer at maximum temperature for a minimum of 10 minutes, removed and weighed before cool down, and then dried again for 10 minute periods until the final weight change of the load is 1 percent or less.

1.4 *Clothes container* means the compartment within the clothes washer that holds the clothes during the operation of the machine.

1.5 *Compact* means a clothes washer which has a clothes container capacity of less than 1.6 ft^3 (45 L).

1.6 *Deep rinse cycle* means a rinse cycle in which the clothes container is filled with water to a selected level and the clothes load is rinsed by agitating it or tumbling it through the water.

1.7 *Energy test cycle* for a basic model means (A) the cycle recommended by the manufacturer for washing cotton or linen clothes, and includes all wash/rinse temperature selections and water levels offered in that cycle, and (B) for each other wash/rinse temperature selection or water level available on that basic model, the portion(s) of other cycle(s) with that temperature selection or water level that, when tested pursuant to these test procedures, will contribute to an accurate representation of the energy consumption of the basic model as used by consumers. Any cycle under (A) or (B) shall include the agitation/tumble operation, spin speed(s), wash times, and rinse times applicable to that cycle, including water heating time for water heating clothes washers.

1.8 *Load use factor* means the percentage of the total number of wash loads that a user would wash a particular size (weight) load.

1.9 *Manual control system* means a clothes washer control system which requires that the consumer make the choices that determine washer operation or washing conditions, such as, for example, wash/rinse temperature selections, and wash time before starting the cycle.

1.10 *Manual water fill control system* means a clothes washer water fill control system which requires the consumer to determine or select the water fill level.

1.11 *Modified energy factor* means the quotient of the cubic foot (or liter) capacity of the clothes container divided by the total clothes washer energy consumption per cycle, with such energy consumption expressed as the sum of the machine electrical energy consumption, the hot water energy consumption, and the energy required for removal of the remaining moisture in the wash load.

1.12 *Non-water-heating clothes washer* means a clothes washer which does not have an internal water heating device to generate hot water.

1.13 *Spray rinse cycle* means a rinse cycle in which water is sprayed onto the clothes for a period of time without maintaining any specific water level in the clothes container.

1.14 *Standard* means a clothes washer which has a clothes container capacity of 1.6 ft^3 (45 L) or greater.

1.15 *Temperature use factor* means, for a particular wash/rinse temperature setting, the percentage of the total number of wash loads that an average user would wash with that setting.

1.16 *Thermostatically controlled water valves* means clothes washer controls that have the ability to sense and adjust the hot and cold supply water.

1.17 *Uniformly distributed warm wash temperature selection(s)* means (A) multiple warm wash selections for which the warm wash water temperatures have a linear relationship with all discrete warm wash selections when the water temperatures are plotted against equally spaced consecutive warm wash selections between the hottest warm

wash and the coldest warm wash. If the warm wash has infinite selections, the warm wash water temperature has a linear relationship with the distance on the selection device (e.g. dial angle or slide movement) between the hottest warm wash and the coldest warm wash. The criteria for a linear relationship as specified above is that the difference between the actual water temperature at any warm wash selection and the point where that temperature is depicted on the temperature/selection line formed by connecting the warmest and the coldest warm selections is less than ±5 percent. In all cases, the mean water temperature of the warmest and the coldest warm selections must coincide with the mean of the ''hot wash'' (maximum wash temperature ≤135 °F (57.2 °C)) and ''cold wash'' (minimum wash temperature) water temperatures within ±3.8 °F (±2.1 °C); or (B) on a clothes washer with only one warm wash temperature selection, a warm wash temperature selection with a water temperature that coincides with the mean of the ''hot wash'' (maximum wash temperature ≤135 °F (57.2 °C)) and ''cold wash'' (minimum wash temperature) water temperatures within ±3.8 °F (±2.1 °C).

1.18 *Warm wash* means all wash temperature selections that are below the hottest hot, less than 135 °F (57.2 °C), and above the coldest cold temperature selection.

1.19 *Water consumption factor* means the quotient of the total weighted per-cycle water consumption divided by the cubic foot (or liter) capacity of the clothes washer.

1.20 *Water-heating clothes washer* means a clothes washer where some or all of the hot water for clothes washing is generated by a water heating device internal to the clothes washer.

1.21 *Symbol usage*. The following identity relationships are provided to help clarify the symbology used throughout this procedure.

E—Electrical Energy Consumption
H—Hot Water Consumption
C—Cold Water Consumption
R—Hot Water Consumed by Warm Rinse
ER—Electrical Energy Consumed by Warm Rinse
TUF—Temperature Use Factor
HE—Hot Water Energy Consumption
F—Load Usage Factor
Q—Total Water Consumption
ME—Machine Electrical Energy Consumption
RMC—Remaining Moisture Content
WI—Initial Weight of Dry Test Load
WC—Weight of Test Load After Extraction
m—Extra Hot Wash (maximum wash temp. >135 °F (57.2 °C.))
h—Hot Wash (maximum wash temp. ≤135 °F (57.2 °C.))
w—Warm Wash
c—Cold Wash (minimum wash temp.)
r—Warm Rinse (hottest rinse temp.)
x or max—Maximum Test Load
a or avg—Average Test Load
n or min—Minimum Test Load

The following examples are provided to show how the above symbols can be used to define variables:

Em_x=''Electrical Energy Consumption'' for an ''Extra Hot Wash'' and ''Maximum Test Load''
R_a=''Hot Water Consumed by Warm Rinse'' for the ''Average Test Load''
TUF_m=''Temperature Use Factor'' for an ''Extra Hot Wash''
HE_{min}=''Hot Water Energy Consumption'' for the ''Minimum Test Load''

1.22 *Cold rinse* means the coldest rinse temperature available on the machine (and should be the same rinse temperature selection tested in 3.7 of this appendix).

1.23 *Warm rinse* means the hottest rinse temperature available on the machine (and should be the same rinse temperature selection tested in 3.7 of this appendix).

2. Testing Conditions

2.1 *Installation*. Install the clothes washer in accordance with manufacturer's instructions.

2.2 *Electrical energy supply*. Maintain the electrical supply at the clothes washer terminal block within 2 percent of 120, 120/240, or 120/208Y volts as applicable to the particular terminal block wiring system and within 2 percent of the nameplate frequency as specified by the manufacturer. If the clothes washer has a dual voltage conversion capability, conduct test at the highest voltage specified by the manufacturer.

2.3 *Supply Water*.

2.3.1 *Clothes washers in which electrical energy consumption or water energy consumption are affected by the inlet water temperature. (For example, water heating clothes washers or clothes washers with thermostatically controlled water valves.)*. The temperature of the hot water supply at the water inlets shall not exceed 135 °F (57.2 °C) and the cold water supply at the water inlets shall not exceed 60 °F (15.6 °C). A water meter shall be installed in both the hot and cold water lines to measure water consumption.

2.3.2 *Clothes washers in which electrical energy consumption and water energy consumption are not affected by the inlet water temperature*. The temperature of the hot water supply shall be maintained at 135 °F±5 °F (57.2 °C±2.8 °C) and the cold water supply shall be maintained at 60 °F±5 °F (15.6 °C±2.8 °C). A water meter shall be installed in both the hot and cold water lines to measure water consumption.

2.4 *Water pressure*. The static water pressure at the hot and cold water inlet connection of the clothes washer shall be maintained at 35 pounds per square inch gauge (psig) ±2.5 psig (241.3 kPa±17.2 kPa) during

the test. The static water pressure for a single water inlet connection shall be maintained at 35 psig±2.5 psig (241.3 kPa±17.2 kPa) during the test. A water pressure gauge shall be installed in both the hot and cold water lines to measure water pressure.

2.5 *Instrumentation*. Perform all test measurements using the following instruments, as appropriate:

2.5.1 *Weighing scales*.

2.5.1.1 *Weighing scale for test cloth*. The scale shall have a resolution of no larger than 0.2 oz (5.7 g) and a maximum error no greater than 0.3 percent of the measured value.

2.5.1.2 *Weighing scale for clothes container capacity measurements*. The scale should have a resolution no larger than 0.50 lbs (0.23 kg) and a maximum error no greater than 0.5 percent of the measured value.

2.5.2 *Watt-hour meter*. The watt-hour meter shall have a resolution no larger than 1 Wh (3.6 kJ) and a maximum error no greater than 2 percent of the measured value for any demand greater than 50 Wh (180.0 kJ).

2.5.3 *Temperature measuring device*. The device shall have an error no greater than ±1 °F (±0.6 °C) over the range being measured.

2.5.4 *Water meter*. The water meter shall have a resolution no larger than 0.1 gallons (0.4 liters) and a maximum error no greater than 2 percent for the water flow rates being measured.

2.5.5 *Water pressure gauge*. The water pressure gauge shall have a resolution of 1 pound per square inch gauge (psig) (6.9 kPa) and shall have an error no greater than 5 percent of any measured value.

2.6 *Test cloths*.

2.6.1 *Energy Test Cloth*. The energy test cloth shall be made from energy test cloth material, as specified in 2.6.4, that is 24 inches by 36 inches (61.0 cm by 91.4 cm) and has been hemmed to 22 inches by 34 inches (55.9 cm by 86.4 cm) before washing. The energy test cloth shall be clean and shall not be used for more than 60 test runs (after preconditioning as specified in 2.6.3 of this appendix). All energy test cloth must be permanently marked identifying the lot number of the material. Mixed lots of material shall not be used for testing the clothes washers.

2.6.1.1 The energy test cloth shall not be used for more than 25 test runs and shall be clean and consist of the following:

(A) Pure finished bleached cloth, made with a momie or granite weave, which is 50 percent cotton and 50 percent polyester and weighs 5.75 ounces per square yard (195.0 g/m^2) and has 65 ends on the warp and 57 picks on the fill; and

(B) Cloth material that is 24 inches by 36 inches (61.0 cm by 91.4 cm) and has been hemmed to 22 inches by 34 inches (55.9 cm by 86.4 cm) before washing. The maximum shrinkage after five washes shall not be more than four percent on the length and width.

2.6.1.2 The new test cloths, including energy test cloths and energy stuffer cloths, shall be pre-conditioned in a clothes washer in the following manner:

2.6.1.2.1 Wash the test cloth using a commercially available clothes washing detergent that is suitable for 135 °F (57.2 °C) wash water as recommended by the manufacturer, with the washer set on maximum water level. Place detergent in washer and then place the new load to be conditioned in the washer. Wash the load for ten minutes in soft water (17ppm or less). Wash water is to be hot, and controlled at 135 °F±5 °F (57.2 °C ±2.8 °C). Rinse water temperature is to be cold, and controlled at 60 °F ±5 °F (15.6 °C ±2.8 °C). Rinse the load through a second rinse using the same water temperature (if an optional second rinse is available on the clothes washer, use it).

2.6.1.2.2 Dry the load.

2.6.1.2.3 A final cycle is to be hot water wash with no detergent followed by two cold water rinses.

2.6.1.2.4 Dry the load.

2.6.2 *Energy Stuffer Cloth*. The energy stuffer cloth shall be made from energy test cloth material, as specified in 2.6.4, and shall consist of pieces of material that are 12 inches by 12 inches (30.5 cm by 30.5 cm) and have been hemmed to 10 inches by 10 inches (25.4 cm by 25.4 cm) before washing. The energy stuffer cloth shall be clean and shall not be used for more than 60 test runs (after preconditioning as specified in 2.6.3 of this appendix). All energy stuffer cloth must be permanently marked identifying the lot number of the material. Mixed lots of material shall not be used for testing the clothes washers.

2.6.3 *Preconditioning of Test Cloths*. The new test cloths, including energy test cloths and energy stuffer cloths, shall be pre-conditioned in a clothes washer in the following manner:

2.6.3.1 Perform 5 complete normal wash-rinse-spin cycles, the first two with AHAM Standard detergent 2A and the last three without detergent. Place the test cloth in a clothes washer set at the maximum water level. Wash the load for ten minutes in soft water (17 ppm hardness or less) using 6.0 grams per gallon of water of AHAM Standard detergent 2A. The wash temperature is to be controlled to 135 °F ±5 °F (57.2 °C ±2.8 °C) and the rinse temperature is to be controlled to 60 °F ±5 °F (15.6 °C ±2.8 °C). Repeat the cycle with detergent and then repeat the cycle three additional times without detergent, bone drying the load between cycles (total of five wash and rinse cycles).

2.6.4 *Energy test cloth material*. The energy test cloths and energy stuffer cloths shall be made from fabric meeting the following specifications. The material should come from a roll of material with a width of approximately 63 inches and approximately 500

yards per roll, however, other sizes maybe used if they fall within the specifications.

2.6.4.1 *Nominal fabric type.* Pure finished bleached cloth, made with a momie or granite weave, which is nominally 50 percent cotton and 50 percent polyester.

2.6.4.2 The fabric weight shall be 5.60 ounces per square yard (190.0 g/m^2), ±5 percent.

2.6.4.3 The thread count shall be 61 × 54 per inch (warp × fill), ±2 percent.

2.6.4.4 The warp yarn and filling yarn shall each have fiber content of 50 percent ±4 percent cotton, with the balance being polyester, and be open end spun, 15/1 ±5 percent cotton count blended yarn.

2.6.4.5 Water repellent finishes, such as fluoropolymer stain resistant finishes shall not be applied to the test cloth. The absence of such finishes shall be verified by:

2.6.4.5.1 American Association of Textile Chemists and Colorists (AATCC) Test Method 118—1997, *Oil Repellency: Hydrocarbon Resistance Test* (reaffirmed 1997), of each new lot of test cloth (when purchased from the mill) to confirm the absence of Scotchguard™ or other water repellent finish (required scores of ''D'' across the board).

2.6.4.5.2 American Association of Textile Chemists and Colorists (AATCC) Test Method 79–2000, *Absorbency of Bleached Textiles* (reaffirmed 2000), of each new lot of test cloth (when purchased from the mill) to confirm the absence of Scotchguard™ or other water repellent finish (time to absorb one drop should be on the order of 1 second).

2.6.4.5.3 The standards listed in 2.6.4.5.1 and 2.6.4.5.2 of this appendix which are not otherwise set forth in this part 430 are incorporated by reference. The material listed in this paragraph has been approved for incorporation by reference by the Director of the Federal Register in accordance with 5 U.S.C. 552(a) and 1 CFR Part 51. Any subsequent amendment to a standard by the standard-setting organization will not affect the DOE test procedures unless and until amended by DOE. Material is incorporated as it exists on the date of the approval and notice of any change in the material will be published in the FEDERAL REGISTER. The standards incorporated by reference are the American Association of Textile Chemists and Colorists Test Method 118–1997, *Oil Repellency: Hydrocarbon Resistance Test* (reaffirmed 1997) and Test Method 79–2000, *Absorbency of Bleached Textiles* (reaffirmed 2000).

(a) The above standards incorporated by reference are available for inspection at:

(i) National Archives and Records Administration (NARA). For information on the availability of this material at NARA, call 202–741–6030, or go to: *http://www.archives.gov/federal_register/code_of_federal_regulations/ibr_locations.html*.

(ii) U.S. Department of Energy, Office of Energy Efficiency and Renewable Energy, Hearings and Dockets, ''Energy Conservation Program for Consumer Products: Clothes Washer Energy Conservation Standards,'' Docket No. EE—RM–94–403, Forrestal Building, 1000 Independence Avenue, SW, Washington, DC.

(b) Copies of the above standards incorporated by reference can be obtained from the American Association of Textile Chemists and Colorists, P.O. Box 1215, Research Triangle Park, NC 27709, telephone (919) 549–8141, telefax (919) 549–8933, or electronic mail: *orders@aatcc.org*.

2.6.4.6 The moisture absorption and retention shall be evaluated for each new lot of test cloth by the Standard Extractor Remaining Moisture Content (RMC) Test specified in 2.6.5 of this appendix.

2.6.4.6.1 Repeat the Standard Extractor RMC Test in 2.6.5 of this appendix three times.

2.6.4.6.2 An RMC correction curve shall be calculated as specified in 2.6.6 of this appendix.

2.6.5 *Standard Extractor RMC Test Procedure.* The following procedure is used to evaluate the moisture absorption and retention characteristics of a lot of test cloth by measuring the RMC in a standard extractor at a specified set of conditions. Table 2.6.5 of this appendix is the matrix of test conditions. The 500g requirement will only be used if a clothes washer design can achieve spin speeds in the 500g range. When this matrix is repeated 3 times, a total of 48 extractor RMC test runs are required. For the purpose of the extractor RMC test, the test cloths may be used for up to 60 test runs (after preconditioning as specified in 2.6.3 of this appendix).

TABLE 2.6.5—MATRIX OF EXTRACTOR RMC TEST CONDITIONS

"g Force"	Warm soak		Cold soak	
	15 min. spin	4 min. spin	15 min. spin	4 min. spin
100	.....	.....	.....	.....
200	.....	.....	.....	.....
350	.....	.....	.....	.....
500	.....	.....	.....	.....

2.6.5.1 The standard extractor RMC tests shall be run in a Bock Model 215 extractor (having a basket diameter of 19.5 inches, length of 12 inches, and volume of 2.1 ft^3), with a variable speed drive (Bock Engineered Products, P.O. Box 5127, Toledo, OH 43611) or an equivalent extractor with same basket design (*i.e.* diameter, length, volume, and hole configuration) and variable speed drive.

2.6.5.2 *Test Load.* Test cloths shall be preconditioned in accordance with 2.6.3 of this appendix. The load size shall be 8.4 lbs., consistent with 3.8.1 of this appendix.

2.6.5.3 *Procedure.*

2.6.5.3.1 Record the ''bone-dry'' weight of the test load (WI).

2.6.5.3.2 Soak the test load for 20 minutes in 10 gallons of soft (<17 ppm) water. The entire test load shall be submerged. The water temperature shall be 100 °F ±5 °F.

2.6.5.3.3 Remove the test load and allow water to gravity drain off of the test cloths. Then manually place the test cloths in the basket of the extractor, distributing them evenly by eye. Spin the load at a fixed speed corresponding to the intended centripetal acceleration level (measured in units of the acceleration of gravity, g) ±1 g for the intended time period ±5 seconds.

2.6.5.3.4 Record the weight of the test load immediately after the completion of the extractor spin cycle (WC).

2.6.5.3.5 Calculate the RMC as (WC-WI)/WI.

2.6.5.3.6 The RMC of the test load shall be measured at three (3) g levels: 100g; 200g; and 350g, using two different spin times at each g level: 4 minutes; and 15 minutes. If a clothes washer design can achieve spin speeds in the 500g range then the RMC of the test load shall be measured at four (4) g levels: 100g; 200g; 350g; and 500g, using two different spin times at each g level: 4 minutes; and 15 minutes.

2.6.5.4 Repeat 2.6.5.3 of this appendix using soft (<17 ppm) water at 60 °F ±5 °F.

2.6.6 *Calculation of RMC correction curve.*

2.6.6.1 Average the values of 3 test runs and fill in table 2.6.5 of this appendix. Perform a linear least-squares fit to relate the standard RMC ($RMC_{standard}$) values (shown in table 2.6.6.1 of this appendix) to the values measured in 2.6.5 of this appendix:

(RMC_{cloth}): $RMC_{standard} \sim A * RMC_{cloth} + B$

Where A and B are coefficients of the linear least-squares fit.

TABLE 2.6.6.1—STANDARD RMC VALUES (RMC STANDARD)

''g Force''	RMC %			
	Warm soak		Cold soak	
	15 min. spin	4 min. spin	15 min. spin	4 min. spin
100	45.9	49.9	49.7	52.8
200	35.7	40.4	37.9	43.1
350	29.6	33.1	30.7	35.8
500	24.2	28.7	25.5	30.0

2.6.6.2. Perform an analysis of variance test using two factors, spin speed and lot, to check the interaction of speed and lot. Use the values from Table 2.6.5 and Table 2.6.6.1 in the calculation. The ''P'' value in the variance analysis shall be greater than or equal to 0.1. If the ''P'' value is less than 0.1 the test cloth is unacceptable. ''P'' is a theoretically based probability of interaction based on an analysis of variance.

2.6.7 *Application of RMC correction curve.*

2.6.7.1 Using the coefficients A and B calculated in 2.6.6.1 of this appendix:

$RMC_{corr} = A * RMC + B$

2.6.7.2 Substitute RMC_{corr} values in calculations in 3.8 of this appendix.

2.7 *Test Load Sizes.* Maximum, minimum, and, when required, average test load sizes shall be determined using Table 5.1 and the clothes container capacity as measured in 3.1.1 through 3.1.5. Test loads shall consist of energy test cloths, except that adjustments to the test loads to achieve proper weight can be made by the use of energy stuffer cloths with no more than 5 stuffer clothes per load.

2.8 *Use of Test Loads.* Table 2.8 defines the test load sizes and corresponding water fill settings which are to be used when measuring water and energy consumptions. Adaptive water fill control system and manual water fill control system are defined in section 1 of this appendix:

TABLE 2.8—TEST LOAD SIZES AND WATER FILL SETTINGS REQUIRED

Manual water fill control system		Adaptive water fill control system	
Test load size	Water fill setting	Test load size	Water fill setting
Max Min	Max Min	Max Avg Min	As determined by the Clothes Washer.

2.8.1 The test load sizes to be used to measure RMC are specified in section 3.8.1.

2.8.2 Test loads for energy and water consumption measurements shall be bone dry prior to the first cycle of the test, and dried

to a maximum of 104 percent of bone dry weight for subsequent testing.

2.8.3 Load the energy test cloths by grasping them in the center, shaking them to hang loosely and then put them into the clothes container prior to activating the clothes washer.

2.9 *Pre-conditioning.*

2.9.1 *Nonwater-heating clothes washer.* If the clothes washer has not been filled with water in the preceding 96 hours, pre-condition it by running it through a cold rinse cycle and then draining it to ensure that the hose, pump, and sump are filled with water.

2.9.2 *Water-heating clothes washer.* If the clothes washer has not been filled with water in the preceding 96 hours, or if it has not been in the test room at the specified ambient conditions for 8 hours, pre-condition it by running it through a cold rinse cycle and then draining it to ensure that the hose, pump, and sump are filled with water.

2.10 *Wash time setting.* If one wash time is prescribed in the energy test cycle, that shall be the wash time setting; otherwise, the wash time setting shall be the higher of either the minimum, or 70 percent of the maximum wash time available in the energy test cycle.

2.11 *Test room temperature for water-heating clothes washers.* Maintain the test room ambient air temperature at 75 °F±5 °F (23.9 °C±2.8 °C).

3. Test Measurements

3.1 *Clothes container capacity.* Measure the entire volume which a dry clothes load could occupy within the clothes container during washer operation according to the following procedures:

3.1.1 Place the clothes washer in such a position that the uppermost edge of the clothes container opening is leveled horizontally, so that the container will hold the maximum amount of water.

3.1.2 Line the inside of the clothes container with 2 mil (0.051 mm) plastic sheet. All clothes washer components which occupy space within the clothes container and which are recommended for use with the energy test cycle shall be in place and shall be lined with 2 mil (0.051 mm) plastic sheet to prevent water from entering any void space.

3.1.3 Record the total weight of the machine before adding water.

3.1.4 Fill the clothes container manually with either 60 °F±5 °F (15.6 °C±2.8 °C) or 100 °F±10 °F (37.8 °C±5.5 °C) water to its uppermost edge. Measure and record the weight of water, W, in pounds.

3.1.5 The clothes container capacity is calculated as follows:

$$C=W/d.$$

where:

C=Capacity in cubic feet (liters).

W=Mass of water in pounds (kilograms).

d=Density of water (62.0 lbs/ft^3 for 100 °F (993 kg/m^3 for 37.8 °C) or 62.3 lbs/ft^3 for 60 °F (998 kg/m^3 for 15.6 °C)).

3.2 *Procedure for measuring water and energy consumption values on all automatic and semi-automatic washers.* All energy consumption tests shall be performed under the energy test cycle(s), unless otherwise specified. Table 3.2 defines the sections below which govern tests of particular clothes washers, based on the number of wash/rinse temperature selections available on the model, and also, in some instances, method of water heating. The procedures prescribed are applicable regardless of a clothes washer's washing capacity, loading port location, primary axis of rotation of the clothes container, and type of control system.

3.2.1 *Inlet water temperature and the wash/rinse temperature settings.*

3.2.1.1 For automatic clothes washers set the wash/rinse temperature selection control to obtain the wash water temperature desired (extra hot, hot, warm, or cold) and cold rinse, and open both the hot and cold water faucets.

3.2.1.2 For semi-automatic washers: (1) For hot water temperature, open the hot water faucet completely and close the cold water faucet; (2) for warm inlet water temperature, open both hot and cold water faucets completely; (3) for cold water temperature, close the hot water faucet and open the cold water faucet completely.

3.2.1.3 *Determination of warm wash water temperature(s) to decide whether a clothes washer has uniformly distributed warm wash temperature selections.* The wash water temperature, Tw, of each warm water wash selection shall be calculated or measured.

For non-water-heating clothes washers, calculate Tw as follows:

$$Tw(\,°F)=((Hw\times 135\,°F)+(Cw\times 60\,°F))/(Hw+Cw)$$

or

$$Tw(\,°C)=((Hw\times 57.2\,°C)+(Cw\times 15.6\,°C))/(Hw+Cw)$$

where:

Hw=Hot water consumption of a warm wash

Cw=Cold water consumption of a warm wash

For water-heating clothes washers, measure and record the temperature of each warm wash selection after fill.

3.2.2 Total water consumption during the energy test cycle shall be measured, including hot and cold water consumption during wash, deep rinse, and spray rinse.

3.2.3 *Clothes washers with adaptive water fill/manual water fill control systems*

3.2.3.1 *Clothes washers with adaptive water fill control system and alternate manual water fill control systems.* If a clothes washer with an adaptive water fill control system allows consumer selection of manual controls as an alternative, then both manual and adaptive

modes shall be tested and, for each mode, the energy consumption (HE_T, ME_T, and D_E) and water consumption (Q_T), values shall be calculated as set forth in section 4. Then the average of the two values (one from each mode, adaptive and manual) for each variable shall be used in section 4 for the clothes washer.

3.2.3.2 *Clothes washers with adaptive water fill control system.*

3.2.3.2.1. Not user adjustable. The maximum, minimum, and average water levels as defined in the following sections shall be interpreted to mean that amount of water fill which is selected by the control system when the respective test loads are used, as defined in Table 2.8. The load usage factors which shall be used when calculating energy consumption values are defined in Table 4.1.3.

3.2.3.2.2 User adjustable. Four tests shall be conducted on clothes washers with user adjustable adaptive water fill controls which affect the relative wash water levels. The first test shall be conducted with the maximum test load and with the adaptive water fill control system set in the setting that will give the most energy intensive result. The second test shall be conducted with the minimum test load and with the adaptive water fill control system set in the setting that will give the least energy intensive result. The third test shall be conducted with the average test load and with the adaptive water fill control system set in the setting that will give the most energy intensive result for the given test load. The fourth test shall be conducted with the average test load and with the adaptive water fill control system set in the setting that will give the least energy intensive result for the given test load. The energy and water consumption for the average test load and water level, shall be the average of the third and fourth tests.

3.2.3.3 *Clothes washers with manual water fill control system.* In accordance with Table 2.8, the water fill selector shall be set to the maximum water level available on the clothes washer for the maximum test load size and set to the minimum water level for the minimum test load size. The load usage factors which shall be used when calculating energy consumption values are defined in Table 4.1.3.

TABLE 3.2—TEST SECTION REFERENCE

Max. Wash Temp. Available	≤135 °F (57.2 °C)		>135 °F (57.2 °C)[2]		
Number of Wash Temp. Selections	1	2	>2	3	>3
Test Sections Required to be Followed	.....	.....	.....	3.3	3.3
	.....	3.4	3.4	.....	3.4
	.....	.....	3.5	3.5	3.5
	3.6	3.6	3.6	3.6	3.6
	[1] 3.7	[1] 3.7	[1] 3.7	[1] 3.7	[1] 3.7
	3.8	3.8	3.8	3.8	3.8

[1] Only applicable to machines with warm rinse in any cycle.
[2] This only applies to water hearting clothes washers on which the maximum wash temperature available exceeds 135 °F (57.2 °C)

3.3 *''Extra Hot Wash'' (Max Wash Temp >135 °F (57.2 °C)) for water heating clothes washers only.* Water and electrical energy consumption shall be measured for each water fill level and/or test load size as specified in 3.3.1 through 3.3.3 for the hottest wash setting available.

3.3.1 *Maximum test load and water fill.* Hot water consumption (Hm_x), cold water consumption (Cm_x), and electrical energy consumption (Em_x) shall be measured for an extra hot wash/cold rinse energy test cycle, with the controls set for the maximum water fill level. The maximum test load size is to be used and shall be determined per Table 5.1.

3.3.2 *Minimum test load and water fill.* Hot water consumption (Hm_n), cold water consumption (Cm_n), and electrical energy consumption (Em_n) shall be measured for an extra hot wash/cold rinse energy test cycle, with the controls set for the minimum water fill level. The minimum test load size is to be used and shall be determined per Table 5.1.

3.3.3 *Average test load and water fill.* For clothes washers with an adaptive water fill control system, measure the values for hot water consumption (Hm_a), cold water consumption (Cm_a), and electrical energy consumption (Em_a) for an extra hot wash/cold rinse energy test cycle, with an average test load size as determined per Table 5.1.

3.4 *''Hot Wash'' (Max Wash Temp≤135 °F (57.2 °C)).* Water and electrical energy consumption shall be measured for each water fill level or test load size as specified in 3.4.1 through 3.4.3 for a 135 °F (57.2 °C)) wash, if available, or for the hottest selection less than 135 °F (57.2 °C)).

3.4.1 *Maximum test load and water fill.* Hot water consumption (Hh_x), cold water consumption (Ch_x), and electrical energy consumption (Eh_x) shall be measured for a hot wash/cold rinse energy test cycle, with the controls set for the maximum water fill

level. The maximum test load size is to be used and shall be determined per Table 5.1.

3.4.2 *Minimum test load and water fill.* Hot water consumption (Hh_n), cold water consumption (Ch_n), and electrical energy consumption (Eh_n) shall be measured for a hot wash/cold rinse energy test cycle, with the controls set for the minimum water fill level. The minimum test load size is to be used and shall be determined per Table 5.1.

3.4.3 *Average test load and water fill.* For clothes washers with an adaptive water fill control system, measure the values for hot water consumption (Hh_a), cold water consumption (Ch_a), and electrical energy consumption (Eh_a) for a hot wash/cold rinse energy test cycle, with an average test load size as determined per Table 5.1.

3.5 *''Warm Wash.''* Water and electrical energy consumption shall be determined for each water fill level and/or test load size as specified in 3.5.1 through 3.5.2.3 for the applicable warm water wash temperature(s).

3.5.1 *Clothes washers with uniformly distributed warm wash temperature selection(s).* The reportable values to be used for the warm water wash setting shall be the arithmetic average of the measurements for the hot and cold wash selections. This is a calculation only, no testing is required.

3.5.2 *Clothes washers that lack uniformly distributed warm wash temperature selections.* For a clothes washer with fewer than four discrete warm wash selections, test all warm wash temperature selections. For a clothes washer that offers four or more warm wash selections, test at all discrete selections, or test at 25 percent, 50 percent, and 75 percent positions of the temperature selection device between the hottest hot (≤135 °F (57.2 °C)) wash and the coldest cold wash. If a selection is not available at the 25, 50 or 75 percent position, in place of each such unavailable selection use the next warmer setting. Each reportable value to be used for the warm water wash setting shall be the arithmetic average of all tests conducted pursuant to this section.

3.5.2.1 *Maximum test load and water fill.* Hot water consumption (Hw_x), cold water consumption (Cw_x), and electrical energy consumption (Ew_x) shall be measured with the controls set for the maximum water fill level. The maximum test load size is to be used and shall be determined per Table 5.1.

3.5.2.2 *Minimum test load and water fill.* Hot water consumption (Hw_n), cold water consumption (Cw_n), and electrical energy consumption (Ew_n) shall be measured with the controls set for the minimum water fill level. The minimum test load size is to be used and shall be determined per Table 5.1.

3.5.2.3 *Average test load and water fill.* For clothes washers with an adaptive water fill control system, measure the values for hot water consumption (Hw_a), cold water consumption (Cw_a), and electrical energy consumption (Ew_a) with an average test load size as determined per Table 5.1.

3.6 *''Cold Wash'' (Minimum Wash Temperature Selection).* Water and electrical energy consumption shall be measured for each water fill level or test load size as specified in 3.6.1 through 3.6.3 for the coldest wash temperature selection available.

3.6.1 *Maximum test load and water fill.* Hot water consumption (Hc_x), cold water consumption (Cc_x), and electrical energy consumption (Ec_x) shall be measured for a cold wash/cold rinse energy test cycle, with the controls set for the maximum water fill level. The maximum test load size is to be used and shall be determined per Table 5.1.

3.6.2 *Minimum test load and water fill.* Hot water consumption (Hc_n), cold water consumption (Cc_n), and electrical energy consumption (Ec_n) shall be measured for a cold wash/cold rinse energy test cycle, with the controls set for the minimum water fill level. The minimum test load size is to be used and shall be determined per Table 5.1.

3.6.3 *Average test load and water fill.* For clothes washers with an adaptive water fill control system, measure the values for hot water consumption (Hc_a), cold water consumption (Cc_a), and electrical energy consumption (Ec_a) for a cold wash/cold rinse energy test cycle, with an average test load size as determined per Table 5.1.

3.7 *Warm Rinse.* Tests in sections 3.7.1 and 3.7.2 shall be conducted with the hottest rinse temperature available. If multiple wash temperatures are available with the hottest rinse temperature, any ''warm wash'' temperature may be selected to conduct the tests.

3.7.1 For the rinse only, measure the amount of hot water consumed by the clothes washer including all deep and spray rinses, for the maximum (R_x), minimum (R_n), and, if required by section 3.5.2.3, average (R_a) test load sizes or water fill levels.

3.7.2 Measure the amount of electrical energy consumed by the clothes washer to heat the rinse water only, including all deep and spray rinses, for the maximum (ER_x), minimum (ER_n), and, if required by section 3.5.2.3, average (ER_a), test load sizes or water fill levels.

3.8 *Remaining Moisture Content:*

3.8.1 The wash temperature will be the same as the rinse temperature for all testing. Use the maximum test load as defined in Table 5.1 and section 3.1 for testing.

3.8.2 *For clothes washers with cold rinse only:*

3.8.2.1 Record the actual 'bone dry' weight of the test load (WI_{max}), then place the test load in the clothes washer.

3.8.2.2 Set water level selector to maximum fill.

3.8.2.3 Run the energy test cycle.

3.8.2.4 Record the weight of the test load immediately after completion of the energy test cycle (WC_{max}).

3.8.2.5 Calculate the remaining moisture content of the maximum test load, RMC_{MAX}, expressed as a percentage and defined as:

$$RMC_{max}=((WC_{max}-WI_{max})/WI_{max})\times 100\%$$

3.8.3 *For clothes washers with cold and warm rinse options:*

3.8.3.1 Complete steps 3.8.2.1 through 3.8.2.4 for cold rinse. Calculate the remaining moisture content of the maximum test load for cold rinse, RMC_{COLD}, expressed as a percentage and defined as:

$$RMC_{COLD}=((WC_{max}-WI_{max})/WI_{max})\times 100\%$$

3.8.3.2 Complete steps 3.8.2.1 through 3.8.2.4 for warm rinse. Calculate the remaining moisture content of the maximum test load for warm rinse, RMC_{WARM}, expressed as a percentage and defined as:

$$RMC_{WARM}=((WC_{max}-WI_{max})/WI_{max})\times 100\%$$

3.8.3.3 Calculate the remaining moisture content of the maximum test load, RMC_{max}, expressed as a percentage and defined as:

$$RMC_{max}=RMC_{COLD}\times(1-TUF_r)+RMC_{WARM}\times(TUF_r).$$

where:

TUF_r is the temperature use factor for warm rinse as defined in Table 4.1.1.

3.8.4 Clothes washers which have options that result in different RMC values, such as multiple selection of spin speeds or spin times, that are available in the energy test cycle, shall be tested at the maximum and minimum extremes of the available options, excluding any ''no spin'' (zero spin speed) settings, in accordance with requirements in 3.8.2 or 3.8.3. The calculated $RMC_{max\ extraction}$ and $RMC_{min\ extraction}$ at the maximum and minimum settings, respectively, shall be combined as follows and the final RMC to be used in section 4.3 shall be:

$$RMC = 0.75\times RMC_{max\ extraction}+0.25\times RMC_{min\ extraction}$$

4. Calculation of Derived Results From Test Measurements

4.1 *Hot water and machine electrical energy consumption of clothes washers.*

4.1.1 *Per-cycle temperature-weighted hot water consumption for maximum, average, and minimum water fill levels using each appropriate load size as defined in section 2.8 and Table 5.1.* Calculate for the cycle under test the per-cycle temperature weighted hot water consumption for the maximum water fill level, Vh_x, the average water fill level, Vh_a, and the minimum water fill level, Vh_n, expressed in gallons per cycle (or liters per cycle) and defined as:

(a) $Vh_x=[Hm_x\times TUF_m]+[Hh_x\times TUF_h]+[Hw_x\times TUF_w]+[Hc_x\times TUF_c]+[R_x\times TUF_r]$

(b) $Vh_a=[Hm_a\times TUF_m]+[Hh_a\times TUF_h]+[Hw_a\times TUF_w]+[Hc_a\times TUF_c]+[R_a\times TUF_r]$

(c) $Vh_n=[Hm_n\times TUF_m]+[Hh_n\times TUF_h]+[Hw_n\times TUF_w]+[Hc_n\times TUF_c]+[R_n\times TUF_r]$

where:

Hm_x, Hm_a, and Hm_n, are reported hot water consumption values, in gallons per-cycle (or liters per cycle), at maximum, average, and minimum water fill, respectively, for the extra-hot wash cycle with the appropriate test loads as defined in section 2.8.

Hh_x, Hh_a, and Hh_n, are reported hot water consumption values, in gallons per-cycle (or liters per cycle), at maximum, average, and minimum water fill, respectively, for the hot wash cycle with the appropriate test loads as defined in section 2.8.

Hw_x, Hw_a, and Hw_n, are reported hot water consumption values, in gallons per-cycle (or liters per cycle), at maximum, average, and minimum water fill, respectively, for the warm wash cycle with the appropriate test loads as defined in section 2.8.

Hc_x, Hc_a, and Hc_n, are reported hot water consumption values, in gallons per-cycle (or liters per cycle), at maximum, average, and minimum water fill, respectively, for the cold wash cycle with the appropriate test loads as defined in section 2.8.

R_x, R_a, and R_n are the reported hot water consumption values, in gallons per-cycle (or liters per cycle), at maximum, average, and minimum water fill, respectively, for the warm rinse cycle and the appropriate test loads as defined in section 2.8.

TUF_m, TUF_h, TUF_w, TUF_c, and TUF_r are temperature use factors for extra hot wash, hot wash, warm wash, cold wash, and warm rinse temperature selections, respectively, and are as defined in Table 4.1.1.

TABLE 4.1.1—TEMPERATURE USE FACTORS

Max Wash Temp Available ..	≤135 °F (57.2 °C)	≤135 °F (57.2 °C)	≤135 °F (57.2 °C)	>135 °F (57.2 °C)	>135 °F (57.2 °C)
No. Wash Temp Selections	Single	2 Temps	>2 Temps	3 Temps	>3 Temps
TUF_m (extra hot)	NA	NA	NA	0.14	0.05
TUF_h (hot)	NA	0.63	0.14	NA	0.09
TUF_w (warm)	NA	NA	0.49	0.49	0.49
TUF_c (cold)	1.00	0.37	0.37	0.37	0.37

TABLE 4.1.1—TEMPERATURE USE FACTORS—Continued

TUF_r (warm rinse)	0.27	0.27	0.27	0.27	0.27

4.1.2 *Total per-cycle hot water energy consumption for all maximum, average, and minimum water fill levels tested.* Calculate the total per-cycle hot water energy consumption for the maximum water fill level, HE_{max}, the minimum water fill level, HE_{min}, and the average water fill level, HE_{avg}, expressed in kilowatt-hours per cycle and defined as:

(a) HE_{max} = $[Vh_x \times T \times K]$=Total energy when a maximum load is tested.
(b) HE_{avg} = $[Vh_a \times T \times K]$=Total energy when an average load is tested.
(c) HE_{min} = $[Vh_n \times T \times K]$=Total energy when a minimum load is tested.

where:

T=Temperature rise=75 °F (41.7 °C).
K=Water specific heat in kilowatt-hours per gallon degree F=0.00240 (0.00114 kWh/L-°C).
Vh_x Vh_a, and Vh_n, are as defined in 4.1.1.

4.1.3 *Total weighted per-cycle hot water energy consumption.* Calculate the total weighted per cycle hot water energy consumption, HE_T, expressed in kilowatt-hours per cycle and defined as:

$HE_T=[HE_{max} \times F_{max}]+[HE_{avg} \times F_{avg}]+[HE_{mn} \times F_{min}]$

where:

HE_{max}, HE_{avg}, and HE_{min} are as defined in 4.1.2.
F_{max}, F_{avg}, and F_{min} are the load usage factors for the maximum, average, and minimum test loads based on the size and type of control system on the washer being tested. The values are as shown in table 4.1.3.

TABLE 4.1.3—LOAD USAGE FACTORS

Water fill control system	Manual	Adaptive
F_{max} = ...	0.72 [1]	0.12 [2]
F_{avg} = ...	.....	0.74 [2]
F_{min}=	0.28 [1]	0.14 [2]

[1] Reference 3.2.3.3.
[2] Reference 3.2.3.2.

4.1.4 *Total per-cycle hot water energy consumption using gas-heated or oil-heated water.* Calculate for the energy test cycle the per-cycle hot water consumption, HE_{TG}, using gas heated or oil-heated water, expressed in Btu per cycle (or megajoules per cycle) and defined as:

$HE_{TG}=H_T \times 1/e \times 3412$ Btu/kWh or $HE_{TG}=HE_T \times 1/e \times 3.6$ MJ/kWh

where:

e=Nominal gas or oil water heater efficiency=0.75.
HE_T=As defined in 4.1.3.

4.1.5 *Per-cycle machine electrical energy consumption for all maximum, average, and minimum test load sizes.* Calculate the total per-cycle machine electrical energy consumption for the maximum water fill level, ME_{max}, the minimum water fill level, ME_{min}, and the average water fill level, ME_{avg}, expressed in kilowatt-hours per cycle and defined as:

(a)ME_{max}= $[Em_x \times TUF_m]$+ $[Eh_x \times TUF_h]$+ $[Ew_x \times TUF_w]$+ $[Ec_x \times TUF_c]$+ $[ER_x \times TUF_r]$
(b) ME_{avg}= $[Em_a \times TUF_m]$+ $[Eh_a \times TUF_h]$+ $[Ew_a \times TUF_w]$+ $[Ec_a \times TUF_c]$+ $[ER_a \times TUF_r]$
(c) ME_{min}= $[Em_n \times TUF_m]$+ $[Eh_n \times TUF_h]$+ $[Ew_n \times TUF_w]$+ $[Ec_n \times xTUF_c]$+ $[ER_n \times TUF_r]$

where:

Em_x, Em_a, and Em_n, are reported electrical energy consumption values, in kilowatt-hours per cycle, at maximum, average, and minimum test loads, respectively, for the extra-hot wash cycle.
Eh_x, Eh_a, and Eh_n, are reported electrical energy consumption values, in kilowatt-hours per cycle, at maximum, average, and minimum test loads, respectively, for the hot wash cycle.
Ew_x, Ew_a, and Ew_n, are reported electrical energy consumption values, in kilowatt-hours per cycle, at maximum, average, and minimum test loads, respectively, for the warm wash cycle.
Ec_x, Ec_a, and Ec_n, are reported electrical energy consumption values, in kilowatt-hours per cycle, at maximum, average, and minimum test loads, respectively, for the cold wash cycle.
ER_x, ER_a, ER_n, are reported electrical energy consumption values, in kilowatt-hours per cycle, at maximum, average, and minimum test loads, respectively, for the warm rinse cycle per definitions in 3.7.2 of this appendix.
TUF_m, TUF_h, TUF_w, TUF_c, and TUF_r are as defined in Table 4.1.1.

4.1.6 *Total weighted per-cycle machine electrical energy consumption.* Calculate the total per cycle load size weighted energy consumption, ME_T, expressed in kilowatt-hours per cycle and defined as:

$ME_T=[ME_{max} \times F_{max}]+[ME_{avg} \times F_{avg}]+[ME_{min} \times F_{min}]$

where:

ME_{max}, ME_{avg}, and ME_{min} are as defined in 4.1.5.
F_{max}, F_{avg}, and F_{min} are as defined in Table 4.1.3.

4.1.7 *Total per-cycle energy consumption when electrically heated water is used*. Calculate for the energy test cycle the total per-cycle energy consumption, E_{TE}, using electrical heated water, expressed in kilowatt-hours per cycle and defined as:

$E_{TE}=HE_T+ME_T$

where:

ME_T=As defined in 4.1.6.
HE_T=As defined in 4.1.3.

4.2 *Water consumption of clothes washers*. (The calculations in this Section need not be performed to determine compliance with the energy conservation standards for clothes washers.)

4.2.1 *Per-cycle water consumption*. Calculate the maximum, average, and minimum total water consumption, expressed in gallons per cycle (or liters per cycle), for the cold wash/cold rinse cycle and defined as:

$Q_{max}=[Hc_x+Cc_x]$
$Q_{avg}=[Hc_a+Cc_a]$
$Q_{min}=[Hc_n+Cc_n]$

where:

Hc_x, Cc_x, Hc_a, Cc_a, Hc_n, and Cc_n are as defined in 3.6.

4.2.2 *Total weighted per-cycle water consumption*. Calculate the total weighted per cycle consumption, Q_T, expressed in gallons per cycle (or liters per cycle) and defined as:

$Q_T=[Q_{max}\times F_{max}]+[Q_{avg}\times F_{avg}]+[Q_{min}\times F_{min}]$

where:

Q_{max}, Q_{avg}, and Q_{min} are as defined in 4.2.1.
F_{max}, F_{avg}, and F_{min} are as defined in table 4.1.3.

4.2.3 *Water consumption factor*. Calculate the water consumption factor, WCF, expressed in gallon per cycle per cubic feet (or liter per cycle per liter), as:

$WCF=Q_T / C$

where:

Q_T=as defined in section 4.2.2.
C = as defined in section 3.1.5.

4.3 *Per-cycle energy consumption for removal of moisture from test load*. Calculate the per-cycle energy required to remove the moisture of the test load, D_E, expressed in kilowatt-hours per cycle and defined as

D_E=(LAF)×(Maximum test load weight)×(RMC—4%)×(DEF)×(DUF)

where:

LAF=Load adjustment factor=0.52.
Test load weight=As required in 3.8.1, expressed in lbs/cycle.
RMC=As defined in 3.8.2.5, 3.8.3.3 or 3.8.4.
DEF=nominal energy required for a clothes dryer to remove moisture from clothes=0.5 kWh/lb (1.1 kWh/kg).
DUF=dryer usage factor, percentage of washer loads dried in a clothes dryer=0.84.

4.4 *Modified energy factor*. Calculate the modified energy factor, MEF, expressed in cubic feet per kilowatt-hour per cycle (or liters per kilowatt-hour per cycle) and defined as:

$MEF=C/(E_{TE} + D_E)$

where:

C=As defined in 3.1.5.
E_{TE}=As defined in 4.1.7.
D_E=As defined in 4.3.

4.5 *Energy factor*. Calculate the energy factor, EF, expressed in cubic feet per kilowatt-hour per cycle (or liters per kilowatt-hour per cycle) and defined as:

$EF=C/E_{TE}$

where:

C=As defined in 3.1.5.
E_{TE}=As defined in 4.1.7.

5. Test Loads

TABLE 5.1—TEST LOAD SIZES

Container volume		Minimum load		Maximum load		Average load	
cu. ft. ≥ <	(liter) ≥ <	lb	(kg)	lb	(kg)	lb	(kg)
0–0.8	0–22.7	3.00	1.36	3.00	1.36	3.00	1.36
0.80–0.90	22.7–25.5	3.00	1.36	3.50	1.59	3.25	1.47
0.90–1.00	25.5–28.3	3.00	1.36	3.90	1.77	3.45	1.56
1.00–1.10	28.3–31.1	3.00	1.36	4.30	1.95	3.65	1.66
1.10–1.20	31.1–34.0	3.00	1.36	4.70	2.13	3.85	1.75
1.20–1.30	34.0–36.8	3.00	1.36	5.10	2.31	4.05	1.84
1.30–1.40	36.8–39.6	3.00	1.36	5.50	2.49	4.25	1.93
1.40–1.50	39.6–42.5	3.00	1.36	5.90	2.68	4.45	2.02
1.50–1.60	42.5–45.3	3.00	1.36	6.40	2.90	4.70	2.13
1.60–1.70	45.3–48.1	3.00	1.36	6.80	3.08	4.90	2.22
1.70–1.80	48.1–51.0	3.00	1.36	7.20	3.27	5.10	2.31
1.80–1.90	51.0–53.8	3.00	1.36	7.60	3.45	5.30	2.40
1.90–2.00	53.8–56.6	3.00	1.36	8.00	3.63	5.50	2.49
2.00–2.10	56.6–59.5	3.00	1.36	8.40	3.81	5.70	2.59
2.10–2.20	59.5–62.3	3.00	1.36	8.80	3.99	5.90	2.68
2.20–2.30	62.3–65.1	3.00	1.36	9.20	4.17	6.10	2.77

TABLE 5.1—TEST LOAD SIZES—Continued

Container volume		Minimum load		Maximum load		Average load	
cu. ft. ≥ <	(liter) ≥ <	lb	(kg)	lb	(kg)	lb	(kg)
2.30–2.40	65.1–68.0	3.00	1.36	9.60	4.35	6.30	2.86
2.40–2.50	68.0–70.8	3.00	1.36	10.00	4.54	6.50	2.95
2.50–2.60	70.8–73.6	3.00	1.36	10.50	4.76	6.75	3.06
2.60–2.70	73.6–76.5	3.00	1.36	10.90	4.94	6.95	3.15
2.70–2.80	76.5–79.3	3.00	1.36	11.30	5.13	7.15	3.24
2.80–2.90	79.3–82.1	3.00	1.36	11.70	5.31	7.35	3.33
2.90–3.00	82.1–85.0	3.00	1.36	12.10	5.49	7.55	3.42
3.00–3.10	85.0–87.8	3.00	1.36	12.50	5.67	7.75	3.52
3.10–3.20	87.8–90.6	3.00	1.36	12.90	5.85	7.95	3.61
3.20–3.30	90.6–93.4	3.00	1.36	13.30	6.03	8.15	3.70
3.30–3.40	93.4–96.3	3.00	1.36	13.70	6.21	8.35	3.79
3.40–3.50	96.3–99.1	3.00	1.36	14.10	6.40	8.55	3.88
3.50–3.60	99.1–101.9	3.00	1.36	14.60	6.62	8.80	3.99
3.60–3.70	101.9–104.8	3.00	1.36	15.00	6.80	9.00	4.08
3.70–3.80	104.8–107.6	3.00	1.36	15.40	6.99	9.20	4.17

NOTES: (1) All test load weights are bone dry weights.
(2) Allowable tolerance on the test load weights are ±0.10 lbs (0.05 kg).

6. Waivers and Field Testing

6.1 *Waivers and Field Testing for Non-conventional Clothes Washers.* Manufacturers of nonconventional clothes washers, such as clothes washers with adaptive control systems, must submit a petition for waiver pursuant to 10 CFR 430.27 to establish an acceptable test procedure for that clothes washer. For these and other clothes washers that have controls or systems such that the DOE test procedures yield results that are so unrepresentative of the clothes washer's true energy consumption characteristics as to provide materially inaccurate comparative data, field testing may be appropriate for establishing an acceptable test procedure. The following are guidelines for field testing which may be used by manufacturers in support of petitions for waiver. These guidelines are not mandatory and the Department may determine that they do not apply to a particular model. Depending upon a manufacturer's approach for conducting field testing, additional data may be required. Manufacturers are encouraged to communicate with the Department prior to the commencement of field tests which may be used to support a petition for waiver. Section 6.3 provides an example of field testing for a clothes washer with an adaptive water fill control system. Other features, such as the use of various spin speed selections, could be the subject of field tests.

6.2 *Nonconventional Wash System Energy Consumption Test.* The field test may consist of a minimum of 10 of the nonconventional clothes washers (''test clothes washers'') and 10 clothes washers already being distributed in commerce (''base clothes washers''). The tests should include a minimum of 50 energy test cycles per clothes washer. The test clothes washers and base clothes washers should be identical in construction except for the controls or systems being tested. Equal numbers of both the test clothes washer and the base clothes washer should be tested simultaneously in comparable settings to minimize seasonal or consumer laundering conditions or variations. The clothes washers should be monitored in such a way as to accurately record the total energy consumption per cycle. At a minimum, the following should be measured and recorded throughout the test period for each clothes washer: Hot water usage in gallons (or liters), electrical energy usage in kilowatt-hours, and the cycles of usage.

The field test results would be used to determine the best method to correlate the rating of the test clothes washer to the rating of the base clothes washer. If the base clothes washer is rated at A kWh per year, but field tests at B kWh per year, and the test clothes washer field tests at D kWh per year, the test unit would be rated as follows:

$A \times (D/B) = G$ kWh per year

6.3 *Adaptive water fill control system field test.* Section 3.2.3.1 defines the test method for measuring energy consumption for clothes washers which incorporate control systems having both adaptive and alternate cycle selections. Energy consumption calculated by the method defined in section 3.2.3.1 assumes the adaptive cycle will be used 50 percent of the time. This section can be used to develop field test data in support of a petition for waiver when it is believed that the adaptive cycle will be used more than 50 percent of the time. The field test sample size should be a minimum of 10 test clothes washers. The test clothes washers should be totally representative of the design, construction, and control system that will be placed in commerce. The duration of field testing in the user's house should be a

minimum of 50 energy test cycles, for each unit. No special instructions as to cycle selection or product usage should be given to the field test participants, other than inclusion of the product literature pack which would be shipped with all units, and instructions regarding filling out data collection forms, use of data collection equipment, or basic procedural methods. Prior to the test clothes washers being installed in the field test locations, baseline data should be developed for all field test units by conducting laboratory tests as defined by section 1 through section 5 of these test procedures to determine the energy consumption, water consumption, and remaining moisture content values. The following data should be measured and recorded for each wash load during the test period: wash cycle selected, the mode of the clothes washer (adaptive or manual), clothes load dry weight (measured after the clothes washer and clothes dryer cycles are completed) in pounds, and type of articles in the clothes load (e.g., cottons, linens, permanent press). The wash loads used in calculating the in-home percentage split between adaptive and manual cycle usage should be only those wash loads which conform to the definition of the energy test cycle.

Calculate:

T=The total number of energy test cycles run during the field test

T_a=The total number of adaptive control energy test cycles

T_m=The total number of manual control energy test cycles

The percentage weighting factors:

$P_a=(T_a/T)\times100$ (the percentage weighting for adaptive control selection)

$P_m=(T_m/T)\times100$ (the percentage weighting for manual control selection)

Energy consumption (HE_T, ME_T, and D_E) and water consumption (Q_T), values calculated in section 4 for the manual and adaptive modes, should be combined using P_a and P_m as the weighting factors.

[62 FR 45508, Aug. 27, 1997; 63 FR 16669, Apr. 6, 1998, as amended at 66 FR 3330, Jan. 12, 2001; 68 FR 62204, Oct. 31, 2003; 69 FR 18803, Apr. 9, 2004]

APPENDIXES K–L TO SUBPART B OF PART 430 [RESERVED]

APPENDIX M TO SUBPART B OF PART 430—UNIFORM TEST METHOD FOR MEASURING THE ENERGY CONSUMPTION OF CENTRAL AIR CONDITIONERS

1. Definitions

1.1 ''Annual performance factor'' means the total heating and cooling done by a heat pump in a particular region in one year divided by the total electric power used in one year.

1.2 ''ARI'' means Air-Conditioning and Refrigeration Institute.

1.3 ''ARI Standard 210–79'' means the test standard published in 1979 by the ARI and titled ''Standard for Unitary Air-Conditioning Equipment''.

1.4 ''ARI Standard 240–77'' means the test standard published in 1977 by the ARI and titled ''Standard for Air-Source Unitary Heat Pump Equipment''.

1.5 ''ARI Standard 320–76'' means the test standard published in 1976 by the ARI and titled ''Standard for Water-Source Heat Pumps''. The single number HSPF energy conservation standard for central air conditioning heat pumps specified in section 325(d)(2) (A) and (B) is based on Region IV and the standardized DHR found in section 6 of this appendix, nearest the capacity measured in the 47 °F test.

1.6 ''ASHRAE'' means the American Society of Heating, Refrigeration and Air-Conditioning Engineers, Inc.

1.7 ''ASHRAE Standard 37–78'' means the test standard published by ASHRAE in 1978 and titled ''Methods of Testing for Rating Unitary Air-Conditioning and Heat Pump Equipment.''

1.8 ''Continuously recorded'' means a method of recording measurements in intervals no greater than 5 seconds.

1.9 ''Cooling load factor (CLF)'' means the ratio of the total cooling done in a complete cycle of a specified time period, consisting of an ''on'' time and ''off'' time, to the steady-state cooling done over the same period at constant ambient conditions.

1.10 ''Cyclic Test'' means a test where the indoor and outdoor conditions are held constant, but the unit is manually turned ''on'' and ''off'' for specific time periods to simulate part-load operation.

1.11 ''Degradation coefficient (C_D)'' means the measure of the efficiency loss due to the cycling of the unit.

1.12 ''Demand-defrost control system'' means a system which is designed to perform the defrost function on the outdoor coil of the heat pump only when a predetermined degradation of performance is measured.

1.13 ''Design heating requirement (DHR)'' is the amount of heating required to maintain a given indoor temperature at a particular outdoor design temperature.

1.14 ''Dry-coil test'' means a test conducted at a wet-bulb temperature and a dry-bulb temperature such that moisture will not condense on the evaporator coil of the unit.

1.15 ''Heating seasonal performance factor (HSPF)'' means the total heating output of a heat pump during its normal annual usage period for heating divided by the total electric power input during the same period.

1.16 ''Heating load factor (HLF)'' means the ratio of the total heating done in a complete cycle of a specified time period, consisting of an ''on'' time ''off'' time, to the steady state heating done over the same period at constant ambient conditions.

1.17 ''Latent cooling'' means the amount of cooling in Btu's necessary to remove water vapor from the air passing over the indoor coil by condensation during a period of time.

1.18 ''Part-load factor (PLF)'' means the ratio of the cyclic energy efficiency ratio to the steady-state energy efficiency ratio at identical ambient conditions.

1.19 ''Seasonal energy efficiency ratio (SEER)'' means the total cooling of a central air conditioner in Btu's during its normal annual usage period for cooling divided by the total electric power input in watt-hours during the same period.

1.20 ''Sensible cooling'' means the amount of cooling in Btu's performed by a unit over a period of time, excluding latent cooling.

1.21 ''Single package unit'' means any central air conditioner in which all the major assemblies are enclosed in one cabinet.

1.22 ''Split system'' means any central air conditioner in which one or more of the major assemblies are separate from the others.

1.23 ''Steady-state test'' means a test in which all indoor and outdoor conditions are held constant and the unit is in non-changing operating mode.

1.24 ''Temperature bin'' means a 5 °F increment over a dry-bulb temperature range of 65 °F through 104 °F for the cooling cycle and −25 °F through 64 °F for the heating cycle.

1.25 ''Time-temperature defrost control system'' means a system which automatically provides the defrost function at a predetermined time interval whenever the outdoor temperature drops below a level where frosting will occur.

1.26 ''Test condition tolerance'' means the maximum permissible variation of the average of the test observations from the standard or desired test condition as provided in 6.1.1, 6.2.1, 6.2.2, and 6.2.3 of this Appendix.

1.27 ''Test operating tolerance'' means the maximum permissible difference between the maximum and the minimum instrument observation during a test as provided in 6.1.1, 6.2.1, 6.2.2, and 6.2.3 of this Appendix.

1.28 ''Wet-coil test'' means a test conducted at a wet-bulb temperature and a dry-bulb temperature such that moisture will condense on the test unit evaporator coil.

2. Testing Required

2.1 *Testing required for air source cooling only units.* Two steady state wet coil tests required to be performed, test A and test B. Test A is to be conducted as an outdoor dry bulb temperature of 95 °F and test B at 82 °F. Test C and D are optional tests to be conducted when cyclic performance parameters are to be measured in order to determine the degradation coefficient, C^D Test C is a steady state dry coil test conducted at an outdoor dry bulb temperature of 82 °F. Test D is a cyclic test also conducted at an outdoor dry bulb temperature of 82 °F. In lieu of conducting tests C and D, an assigned value of 0.25 may be used for the degradation coefficient, C^D.

2.1.1 *Testing required for units with single speed compressors and single speed condenser fans.* Test A and test B shall be performed according to the test procedures outlined in 4.1 of this Appendix. In addition, the cyclic performance shall be evaluated by conducting test C and D according to the requirements outlined in 4.1 of this Appendix.

2.1.2 *Testing required for units with single speed compressors and multiple-speed condenser fans.* The test requirements for multiple-speed condenser fan units shall be the same as described in section 2.1.1 for single speed condensor fan units.

2.1.3 *Testing required for units with two-speed compressors, two compressors, or cylinder unloading.* The test requirements for two-speed compressor units, two compressor units, or units with cylinder unloading are the same as described in 2.1.1 of this Appendix except that test A and test B shall be performed at each compressor speed or at each compressor capacity.

2.1.4 *Testing required for units with two-speed compressors, two compressors, or cylinder unloading capable of varying the sensible to total (S/T) capacity ratio.* When a unit employing a two-speed compressor, two compressors, or cylinder unloading provides a method of varying the ratio of the sensible cooling capacity to the total cooling capacity, (S/T), the test requirements are the same as for two-speed compressor units as described in 2.1.3 of this Appendix.

2.1.5 *Testing required for units with triple-capacity compressors.* (Reserved)

2.1.6 *Testing required for units with variable-speed compressors.* The tests for variable-speed equipment consist of five (5) wet coil tests and two (2) dry coil tests. Two of the

wet coil tests, A and B, are conducted at the maximum speed. Two wet coil tests, B_2 and low temperature test, are conducted at the minimum speed. The fifth wet coil test is conducted at an intermediate speed. Dry coil tests, C and D, are conducted at the minimum speed if the coefficient of degradation (C_D) value of 0.25 is not adopted. The test conditions and procedures for the above are outlined in sections 3.1 and 4.1 of this Appendix.

2.1.7 *Testing required for split-type ductless systems*. The tests for split-type ductless systems are determined by the type of compressor installed in the outdoor unit. For the appropriate tests refer to sections 2.1.1, 2.1.2, 2.1.3, 2.1.4, 2.1.5, or 2.1.6 of this Appendix.

2.2 *Testing required for air source heating only units*. Four types of tests are required to be performed: High Temperature, Cyclic, Frost Accumulation, and Low Temperature. In lieu of conducting the Cyclic Test an assigned value of 0.25 may be used for the degradation coefficient, C^D.

2.2.1 *Testing required for units with single speed compressors*. Units with single speed compressors shall be subjected respectively to the High Temperature Test at 47 °F described in section 3.2.1.1, the Cyclic Test as described in section 3.2.1.2, the Frost Accumulation Test as described in section 3.2.1.3, and the Low Temperature Test as described in section 3.2.1.4.

2.2.2 *Testing required for units with two-speed compressors, two compressors, or cylinder unloading*. With the unit operating: at high compressors speed (two-speed compressor), with both compressors in operation (two-compressors), or at the maximum capacity (cylinder unloading); the following tests are required to be performed on all units; the High Temperature Test at 47 °F, the Frost Accumulation Test, and the Low Temperature Test. An additional test (cyclic at 47 °F) is required, with the unit operating at the high compressor speed (two-speed compressor), with both compressors in operation (two compressors), or at the maximum capacity (cylinder unloading); if the normal mode of operation requires cycling ''on'' and ''off'' of the compressor(s) at high speed or maximum capacity.

With the unit operating: at the low compressor speed (two-speed compressor), with the single compressor which normally operates at low loads (two compressors), or at the low compressor capacity (cylinder unloading); the following tests are required to be performed on all units: the High Temperature Test at 47 °F, the High Temperature Test at 62 °F, and the Cyclic Test. Additional tests, (Frost Accumulation Test and Low Temperature Test) are required, with the unit operating: on low compressor speed (two-speed compressor), with the single compressor which normally operates at low loads (two compressors) or at the low compressor capacity (cylinder unloading), if the unit's low speed, one compressor or low capacity performance at and below 40 °F is needed to calculate its seasonal performance.

2.2.3 *Testing required for units with triple-capacity compressors*. (Reserved)

2.2.4 *Testing required for units with variable-speed compressors*. There are seven basic tests and one optional test for variable-speed units. Three tests (high temperature test, low temperature test, and frost accumulation test) are performed at the maximum speed. Three tests (two high temperature and one cyclic test) are performed with the unit operating at minimum speed. A second frost accumulation test is performed at an intermediate speed. The intermediate speed is the same as in the cooling mode.

In lieu of the maximum speed frost accumulation test, two equations are provided in section 4.2 of this Appendix. In lieu of the cyclic test an assigned value of 0.25 may be used for the coefficient of degradation C_D. The optional test is a nominal capacity test applicable to units which have a heating mode maximum speed greater than the cooling mode maximum speed. The conditions and procedures for the above tests are described in sections 3.2 and 4.2 respectively, of this Appendix.

2.2.5 *Testing required for split-type ductless system*. The type of compressor installed in the outdoor unit determines the testing required, refer to previous sections 2.2.1, 2.2.2, 2.2.3, or 2.2.4. The conditions and procedures will be modified as indicated for the various types as stated in sections 3.2 and 4.2 respectively.

2.3 *Testing required for air source units which provide both heating and cooling*. The requirements for units which provide both heating and cooling shall be the same as the requirements in Section 2.1. and 2.2 of this Appendix.

3. Testing Conditions

3.1 *Testing conditions for air source cooling only units*. The test room requirement and equipment installation procedures are the same as those specified in sections 11.1 and 11.2 of ASHRAE Standard 37–78. Units designed for both horizontal and vertical installation shall be tested in the orientation in which they are most frequently installed. All tests shall be performed at the normal residential voltage and frequency for which the equipment is designed (either 115 or 230 volts and 60 hertz), the test installation shall be designed such that there will be no air flow through the cooling coil due to natural or forced convection while the indoor fan is ''off''. This shall be accomplished by installing dampers upstream and downstream of the test unit to block the off period air flow. Values of capacity for rating purposes are to be rounded off to the nearest 100 Btu/hour for capacities less than 20,000 Btu/hour; to the

nearest 200 Btu/hour for capacities between 20,000 and 37,999 Btu/hour; and to the nearest 500 Btu/hour for capacities between 38,000 and 64,999 Btu/hour.

The following conditions listed in ARI Standard 210.79 shall apply to all tests performed in Section 3.1 of this Appendix:

5.1.3.4 Cooling Coil Air Quantity.

5.1.3.6 Requirements for Separated Assemblies.

3.1.1 *Testing conditions for units with single speed compressors and single speed condenser fans.*

3.1.1.1 *Steady state wet-coil performance tests (Test A and Test B).* Test A and test B shall be performed with the air entering the indoor side of the unit having a dry-bulb temperature of 80 °F and a wet-bulb temperature of 87 °F. The dry-bulb temperature of the air entering the outdoor side of the unit shall be 95 °F in test A and 82 °F in test B. The temperature of the air surrounding the outdoor side of the unit in each test shall be the same as the outdoor entering air temperature except for units or sections thereof intended to be installed only indoors, in which case the dry-bulb temperature surrounding that indoor side of the unit shall be 80 °F. For those units which reject condensate to the condenser, located in the outdoor side of the unit, the outdoor wet-bulb temperature surrounding the outdoor side of the unit shall be 75 °F in test A and 65 °F in test B.

3.1.1.2 *Steady state dry coil performance test (Test C) and cyclic dry coil performance test (Test D).* Test C and test D shall be performed with the air entering the indoor side of the unit having a dry-bulb temperature of 80 °F and a wet-bulb temperature which does not result in formation of condensate on the indoor coil. (It is recommended that an indoor wet-bulb temperature of 57 °F or less be used.) The dry-bulb temperature of the air entering the outdoor portion of the unit shall be 82 °F. The outdoor portion of the unit shall be subject to the same conditions as the requirements for conducting test B as stated previously in section 3.1.1.1. Test C shall be conducted with the unit operating steadily. Test D shall be conducted by cycling the unit ''on'' and ''off'' by manual or automatic operation of the normal control circuit of the unit. The unit shall cycle with the compressor ''on'' for 6 minutes and ''off'' for 24 minutes. The indoor fan shall also cycle ''on'' and ''off'', the duration of the indoor fan ''on'' and ''off'' periods being governed by the automatic controls which the manufacturer normally supplies with the unit. The results of tests C and D shall be used to calculate a degradation coefficient, C_D by the procedures outlined in 5.1 of this Appendix.

3.1.2 *Testing conditions for units with single speed compressors and multiple-speed condenser fans.* The condenser fan speed to be used in test A shall be that speed which normally occurs at an outdoor dry-bulb temperature of 95 °F, and for test B, the fan speed shall be that which normally occurs at an outdoor dry-bulb temperature of 82 °F. If elected to be performed, tests C and D shall be conducted at the same condenser fan speed as in test B.

3.1.3 *Testing conditions for units with two-speed compressors, two compressors, or cylinder unloading.* The condenser fan speed used in conducting test A at each compressor speed shall be that which normally occurs at an outdoor dry-bulb temperature of 95 °F. For test B, the condenser fan speed at each compressor speed shall be that which normally occurs at an outdoor dry-bulb temperature of 82 °F. If elected to be performed, tests C and D shall be conducted at the low compressor speed with the same condenser fan speed as used in test B. For those two-speed units in which the normal mode of operation involves cycling the compressor ''on'' and ''off'' at high speed, tests C and D shall also be performed with the compressor operating at high speed and at a condenser fan speed that normally occurs at test A ambient conditions. Units consisting of two compressors are subject to the same requirements as those units containing two-speed compressors, except that when operated at high speed, both compressors shall be operating and when operating at low speed, only the compressor which normally operates at an outdoor dry-bulb temperature of 82 °F shall be operating.

In lieu of conducting tests C and D, an assigned value of 0.25 may be used for the degradation coefficient, C_D, at each compressor speed. If the assigned degradation coefficient is used for one compressor speed it must also be used for the other compressor speed.

In the case of units with cylinder unloading, the loaded and the unloaded conditions correspond to high and low compressor speed on two-speed units respectively.

3.1.4 *Testing conditions for units with two-speed compressors, two compressors, or cylinder unloading capable of varying the sensible to total (S/T) capacity ratio.* The mode of operation selected for controlling the S/T ratio in the performance of test A and test B at each compressor speed shall be such that it does not result in an operating configuration which is not typical of a normal residential installation. If elected to be performed, tests C and D shall be conducted at low compressor speed (single compressor operating) with the same S/T control mode as used in test B when performed at the low compressor speed. Likewise, tests C and D shall also be conducted at high compressor speed (two compressors operating) and with the same S/T control mode as in test A when performed at the high compressor speed.

In the case of units with cylinder unloading, the loaded and unloaded conditions correspond to high and low compressor speed on two-speed units respectively.

3.1.5 *Testing conditions for units with triple-capacity compressors.* (Reserved)

3.1.6 *Additional testing conditions for cooling-only units with variable-speed compressors.* For cooling-only units and air-source heat pumps with varaible-speed compressors, the air flow rate at fan speeds less than the maximum fan speed shall be determined by using the fan law for a fixed resistance system. The air flow rate is given by the ratio of the actual fan speed to the maximum fan speed multiplied by the air flow rate at the maximum fan speed. Minimum static pressure requirements only apply when the fan is running at the maximum speed.

3.1.6.1 *Testing conditions for steady-state wet coil tests.* Tests A and B shall be performed at the maximum speed at conditions specified in section 3.1.1 of this Appendix. Test B_2 and the low temperature test are performed at the minimum speed with outdoor dry bulb temperatures of 82 °F and 67 °F respectively. The intermediate speed wet coil test is performed at the outdoor dry bulb temperature of 87 °F. For units which reject condensate the outdoor wet bulb temperature shall be maintained at 75 °F for Test A, 65 °F for Tests B and B_2, 53.5 °F for the low temperature test and 69 °F for the intermediate test. The indoor conditions for all wet coil tests are the same as those given in section 3.1.1 of this Appendix.

3.1.6.2 *Test conditions for dry coil tests.* Dry coil Tests C and D are conducted at an outdoor dry bulb temperature of 67 °F. For units which reject condensate the outdoor wet bulb temperature shall be maintained at 53.5 °F. The indoor dry bulb temperature shall be 80 °F and the wet bulb temperature shall be sufficiently low so no condensation occurs on the evaporator (It is recommended that an indoor wet bulb temperature of 57 °F or less be used).

3.1.7 *Split-type ductless systems.* Test conditions shall be the same as those specified for the same single outdoor unit compressor type, assuming it was matched with a single indoor coil.

3.1.7.1 *Interconnection.* For split-type ductless systems, all standard rating tests shall be performed with a minimum length of 25 feet of interconnecting tubing between each indoor fan-coil unit and the common outdoor unit. Such equipment in which the interconnection tubing is furnished as an integral part of the machine not recommended for cutting to length shall be tested with complete length of tubing furnished, or with 25 feet of tubing, whichever is greater. At least 10 feet of the interconnection tubing shall be exposed to the outside conditions. The line sizes, insulation and details of installation shall be in accordance with the manufacturer's published recommendation.

3.1.7.2 *Control testing conditions for split-type ductless systems.* For split-type ductless systems, a single control circuit shall be substituted for any multiple thermostats in order to maintain a uniform cycling rate during test D and the high temperature heating cyclic test. During the steady-state tests, all thermostats shall be shunted resulting in all indoor fan-coil units being in operation.

3.1.7.3 *Split-type ductless systems with multiple coils or multiple discharge outlets shall have short plenums attached to each outlet.* Each plenum shall discharge into a single common duct section, the duct section in turn discharging into the air measuring device (or a suitable dampering device when direct air measurement is not employed). Each plenum shall have an adjustable restrictor located in the plane where the plenums enter the common duct section for the purpose of equalizing the static pressures in each plenum. The length of the plenum is a minimum of $2.5\times(A\times B)^{.5}$, A=width and B=height of duct or outlet. Static pressure readings are taken at a distance of $2\times(A\times B)^{.5}$ from the outlet.

3.2 *Testing conditions for air source heating only units.* The equipment under test shall be installed according to the requirements of Section 11.2 of ASHRAE Standard 37–78 and Section 5.1.4.5 of ARI Standard 240–77. Test chamber requirements are the same as given in Section 11.1 of ASHRAE Standard 37–78. Units designed for both horizontal and vertical installation shall be tested in the orientation in which they are most often installed. All tests shall be performed at the normal residential voltage and frequency for which the equipment is designed (either 115 or 230 volts and 60 hertz). Values of capacity for rating purposes are to be rounded off to the nearest 100 Btu/hour for capacities less than 20,000 Btu/hour; to the nearest 200 Btu/hour for capacities between 20,000 and 37,999 Btu/hour; and to the nearest 500 Btu/hour for capacities between 38,000 and 64,999 Btu/hour.

3.2.1 *Testing conditions for units with single speed compressors.*

3.2.1.1 *High temperature test conditions.* The High Temperature Test at 47 °F shall be conducted at an outdoor dry-bulb temperature of 47 °F and an outdoor wet-bulb temperature at 43 °F. The High Temperature Test at 62 °F shall be conducted at an outdoor dry-bulb temperature of 62 °F and an outdoor wet-bulb temperature of 56.5 °F. For both tests, the dry-bulb air temperature entering and surrounding the indoor portion of the unit shall be 70 °F and a maximum wet-bulb temperature of 60 °F. The duration of the tests shall be for a minimum of ½ hour.

3.2.1.2 *Cycling test conditions.* The Cycling Test at 47 °F shall be conducted at the same dry-bulb and wet-bulb temperature as the

High Temperature Test at 47 °F as described in 3.2.1.1. During the Cycling Test, the indoor fan shall cycle ''on'' and ''off'', as the compressor cycles ''on'' and ''off'', except that the indoor fan cycling times may be delayed due to controls that are normally installed with the unit. The compressor cycling times shall be 6 minutes ''On'' and 24 minutes ''off.'' The test installation shall be designed such that there will be no airflow through the indoor unit due to natural or forced convection while the indoor fan is ''off.'' This shall be accomplished by installing dampers upstream and downstream of the test unit to block the off period airflow.

3.2.1.3 *Frost accumulation test conditions.* The dry-bulb temperature and the resultant dew-point temperature of the air entering the outdoor portion of the unit shall be 35 °F and 30 °F respectively. The indoor dry-bulb temperature shall be 70 °F and the maximum indoor wet-bulb temperature shall be 60 °F. The Frost Accumulation Test requires that the unit undergo a defrost prior to the actual test. The test then begins at defrost termination and ends at the next defrost termination. Defrost termination occurs when the controls normally installed within the unit are actuated to cause it to change defrost operation to normal heating operation. During the test, auxiliary resistance heaters shall not be employed during either the heating or defrost portion of the test.

3.2.1.4 *Low temperature test conditions.* The Low Temperature Test shall be conducted at a dry-bulb temperature entering the outdoor portion of the unit of 17 °F and a wet-bulb temperature of 15 °F. The air entering the indoor portion of the unit shall have a dry-bulb temperature of 70 °F and a maximum wet-bulb temperature of 60 °F.

3.2.1.5 *Additional testing conditions.* All tests shall be conducted at the indoor-side air quantities specified in Sections 4.1.4.3 and 5.1.4.6 and Table 2 of ARI Standard 240–77. The following conditions listed in ARI Standard 240–77 shall apply to all tests performed in Section 3.2 of this Appendix.

3.2.3 *Testing conditions for units with triple-capacity compressors.* (Reserved)

3.2.4 *Testing conditions for units with variable-speed compressors.* The testing condition for variable-speed compressors shall be the same as those for single speed units as described in section 3.2.1 of this Appendix with the following exceptions; the cyclic test is performed with an outdoor dry bulb temperature of 62 °F and a wet bulb temperature of 56.5 °F. The optional, nominal capacity test shall be performed at the conditions specified for the 47 °F high temperature test.

3.2.5 *Testing conditions for split-type ductless system.* The testing conditions for split-type ductless systems shall be based on the type of compressor installed in the single outdoor unit. The heating mode shall have the same piping and control requirements as in 3.1.7.

5.4.4.4 Outdoor-Side Air Quantity; and

5.1.4.5 Requirements for Separated Assemblies.

In all tests, the specified dry-bulb temperature entering the outdoor portion of the unit also applies to the air temperature surrounding the outdoor portion of the unit. Similarly, models where portions are intended to be installed indoors shall have the air temperature surrounding that portion of the unit the same as the indoor air temperature.

3.2.2 *Testing conditions for units with two-speed compressors, two compressors or cylinder unloading.* The testing conditions for two-speed compressors, two compressors, or cylinder unloading shall be the same as those for single speed units as described in 3.2.1.

3.3 *Testing conditions for air source units which provide both heating and cooling.* The testing conditions for units which provide both heating and cooling shall be the same as the requirements in Sections 3.1 and 3.2 of this Appendix.

4.0 Testing procedures. Measure all electrical inputs as described in the procedures below. All electrical measurements during all ''on'' and ''off'' periods shall include auxiliary power or energy (controls, transformers, crankcase heaters, etc.) delivered to the unit.

4.1 *Test procedures for air source cooling-only units.* All steady-state wet- and dry-coil performance tests on single package units shall simultaneously employ the Air-Enthalpy Method (Section 3 of ASHRAE Standard 37–78) on the indoor side and one other method consisting of either the Air-Enthalpy Method or the Compressor Calibration Method (Section 4 of ASHRAE Standard 37–78 on the outdoor side. All steady-state wet- and dry-coil performance tests on split systems shall simultaneously employ the Air-Enthalpy Method or the Compressor Calibration Method on the indoor side and the Air-Enthalpy Method, the Compressor Calibration Method or the Volatile Refrigerant Flow Method (Section 5 of ASHRAE Standard 37–78) on the outside. All cyclic dry-coil performance tests shall employ the Air-Enthalpy Method, indoor side only. The values calculated from the two test methods must agree within 6 percent in order to constitute a valid test. Only the results from the Air-Enthalpy Method on the indoor side shall be used in the calculations in Section 5.1. Units shall be installed and tested in such a manner that when operated under steady-state conditions, the cooling coil and condenser coil air flows meet the requirements of Sections 5.1.3.4, 5.1.3.5, and 5.1.3.7 of ARI Standard 210.79.

4.1.1 *Test operating procedures.*

4.1.1.1 *Steady-state wet-coil performance tests (Test A and Test B).* Steady-state wet-

coil performance tests (A and B) shall be conducted in accordance with the conditions described in sections 3.1.1.1, 3.1.2, 3.1.3, 3.1.4, and 3.1.5 of this Appendix and the procedures described for cooling tests in Section 11.3 of ASHRAE standard 37–78 and evaluated in accordance with the cooling-related requirements of Section 12 of the ASHRAE Standard 37–78. The test room reconditioning apparatus and the equipment under test shall be operated until equilibrium conditions are attained.

4.1.1.2 *Steady-state and cyclic dry-coil performance tests (Test C and Test D).* The steady-state and cyclic dry-coil tests (C and D) shall be conducted as described below in accordance with the conditions described in sections 3.1.1.2, 3.1.2, 3.1.3, 3.1.4, and 3.1.5 of this Appendix. The results shall be evaluated in accordance with the cooling related requirements of Sections 12.1.5, 12.1.6, 12.1.7, of ASHRAE Standard 37.78. The test room reconditioning apparatus and the equipment under test shall be operated until equilibrium conditions are attained, but not for less than one hour before data for test C are recorded. For all equipment test methods including the Compressor Calibration Method, test C shall be performed with data recorded at 10-minute intervals until four consecutive sets of readings are attained with the tolerance prescribed in Section 11.6 of ASHRAE Standard 37–78. When the Air-Enthalpy Method is used on the outdoor side for test C, the requirements of this section shall apply to both the preliminary test and the regular equipment test; the requirements of Section 3.6 of ASHRAE Standard 37–78 shall also apply. Immediately after test C is completed the test unit shall be manually cycled ''off'' and ''on'' using the time periods from 3.1.1 of this Appendix until steadily repeating ambient conditions are again achieved in both the indoor and outdoor test chambers, but for not less than 2 complete ''off''/''on'' cycles. Without a break in the cycling pattern, the unit shall be run through an additional ''off''/''on'' cycle during which the test data required in 5.1 shall be recorded. During this last cycle, which is referred to as the test cycle, the indoor and outdoor test room ambient conditions shall remain within the tolerances specified in 4.1.3 of this Appendix during the cyclic dry-coil tests, all air moving equipment on the condenser side shall cycle ''on'' and ''off'' when the compressor cycles ''on'' and ''off''. The indoor air moving equipment shall also cycle ''off'' as governed by any automatic controls normally installed with the unit. This last requirement applies to units having an indoor fan time delay. Units not supplied with an indoor fan time delay shall have the indoor air moving equipment cycle ''on'' and ''off'' as the compressor cycles ''on'' and ''off.''

Cooling cyclic tests for variable-speed units shall be conducted by cycling the compressor 12 minutes ''on'' and 48 minutes ''off''. The capacity shall be measured for the integration time (θ), which is the compressor ''on'' time of 12 minutes or the ''on'' time as extended by fan delay, if so equipped. The electrical energy shall be measured for the total integration time (θ_{cyc}) of 60 minutes. In lieu of conducting C and D tests, an assigned value of 0.25 shall be used for the degradation coefficient for cooling, C_D.

4.1.1.3 *Testing procedures for triple-capacity compressors.* (Reserved)

4.1.1.4 *Intermediate cooling steady-state test for units with variable-speed compressors.* For units with variable-speed compressors, an intermediate cooling steady-state test shall be conducted in which the unit shall be operated at a constant, intermediate compressor speed (k=i) in which the dry/bulb and wet-bulb temperatures of the air entering the indoor coil are 80 $°F_{DB}$ and 67 $°F_{WB}$ and the outdoor coil are 87 $°_{DB}$ and 69 $°F_{WB}$. The tolerances for the dry-bulb and wet-bulb temperatures of the air entering the indoor and outdoor coils shall be the test operating tolerance and test condition tolerance specified in Table 6.1.1 of this Appendix. The intermediate compressor speed shall be the minimum compressor speed plus one-third the difference between the maximum and minimum speeds of the cooling mode. (Inter. speed=min. speed+⅓ (max. speed−min. speed.) A tolerance of plus five percent or the next higher inverter frequency step from that calculated is allowed.

4.1.1.5 *Testing procedures for split-type ductless systems.* Cyclic tests of ductless units will be conducted without dampers. The data cycle shall be preceded by a minimum of two cycles in which the indoor fan cycles on and off with the compressor. For the data cycle the indoor fan will operate three minutes prior to compressor cut-on and remain on for three minutes after compressor cut-off. The integration time for capacity and power shall be from compressor cut-on time to indoor fan cut-off time. The fan power for three minutes after compressor cut-off shall be added to the integrated cooling capacity.

4.1.2 *Test instrumentation.* The steady-state and cyclic performance tests shall have the same requirements pertaining to instrumentation and data as those specified in Section 10 and Table II of ASHRAE Standard 37.78. For the cyclic dry-coil performance tests, the dry-bulb temperature of the air entering and leaving the cooling coil, or the difference between these two dry-bulb temperatures, shall be continuously recorded with instrumentation accurate to within ±0.3 °F of indicated value and have a response time of 2.5 seconds or less. Response time in the time required for the instrumentation to obtain 63 percent of the final steady-state temperature difference when subjected to a step change in temperature difference of 15 °F or more. Electrical measurement devices

(watt-hour meters) used during all tests shall be accurate to within ±0.5 percent of indicated value.

4.1.3 *Test tolerances.* All steady-state wet- and dry-coil performance tests shall be performed within the applicable operating and test condition tolerances specified in Section 11.6 and Table III of ASHRAE Standard 37–78.

4.1.3.1 The indoor and outdoor average dry-bulb temperature for the cyclic dry coil test D shall both be within 1.0 °F of the indoor and outdoor average dry bulb temperature for the steady-state dry coil test C, respectively.

4.1.3.2 The test condition and test operating tolerances for conducting test D are stated in 6.1.1 of this Appendix. Variation in the test conditions greater than the tolerances prescribed in 6.1.1 of this Appendix shall invalidate the test. It is suggested that an electric resistance heater having a heating capacity approximately equal to the sum of the cooling capacity and compressor and condenser fan power should be installed in the outdoor test room and cycled ''off'' and ''on'' as the unit cycles ''on'' and ''off'' respectively to improve control in the outdoor test room. Similarly, an electric resistance heater having a heating capacity approximately equal to the cooling capacity of the unit could be installed in the indoor test room, and cycled ''on'' and ''off'' as the test unit cycles ''on'' and ''off'' to improve indoor room control.

4.2 *Testing procedures for air source heating only units.*

4.2.1 *Test operating procedures.* All High Temperature Tests, the Cyclic Test, the Frost Accumulation Test, and the low Temperature test shall have the performance evaluated by the Air-Enthalpy Method on the indoor side. In addition, the High Temperature Test and the Low Temperature Test shall have a simultaneous test method (as described in 4.1) used as a check. The values calculated from the two methods must agree within 6 percent in order to constitute a valid test. Only the results from the Air-Enthalpy Method on the indoor side shall be used in the calulations in section 5.2.

4.2.1.1 *Test procedure for high temperature test.* When the outdoor Air-Enthalpy Method is used, the outdoor chamber must not interfere with the normal air circulating pattern during the preliminary test. It is necessary to determine and adjust for system resistance when the outdoor air measuring apparatus is attached to the outdoor portion of the unit. The test room apparatus and test units must be operated for at least one hour with at least ½ hour at equilibrium and at the specified test conditions prior to starting the test. The High Temperature Test shall then be conducted for a minimum of ½ hour with intermittent data being recorded at 10-minute intervals. For all units, especially those having controls which periodically cause the unit to operate in defrost mode, attention should be given to prevent defrost during the High Temperature Test. Units which have undergone a defrost should operate in the heating mode for at least 10-minutes after defrost termination prior to the start of the test. When the outdoor Air-Enthalpy Method is used as a second test then a preliminary test must be conducted for a minimum of 30 minutes with 4 or more sets of data recorded at 10 minute intervals, all remaining requirements of Section 3.6.1 in the ASHRAE Standard 37–78 shall then apply in conducting the preliminary test for the outdoor air enthalpy method. For some units, at the ambient condition of the test, frost may accumulate on the outdoor coil. If the supply air temperature or the difference between the supply air temperature and the indoor air entering temperature has decreased by more than 1.5 °F at the end of the test, the unit shall be defrosted and the test restarted. Only the results of this second High Temperature Test shall be used in the heating seasonal performance calculation in section 5.2. Prior to beginning the High Temperature Test, a unit shall operate in the heating mode for at least 10 minutes after defrost termination to establish equilibrium conditions for the unit and the room reconditioning apparatus. The High Temperature Test may only begin when the test unit and room conditions are within the test condition tolerances specified in Section 6.2.1 of this Appendix.

4.2.1.2 *Test procedures for the cyclic test.* The cyclic test shall follow the High Temperature Test and by cycled ''on'' and ''off'' as specified in 3.2.1.2 until steadily repeating ambient conditions are achieved for both the indoor and outdoor test chambers, but for not less than 2 complete ''off''/''on'' cycles. Without a break in the cycling pattern, the unit shall be operated through an additional ''off''/''on'' cycle, during which the required test data shall be recorded. During the last cycle, which is referred to as the test cycle, the indoor and outdoor test room ambient conditions shall remain within the tolerance specified in section 6.2.2. of this Appendix. If, prior to the High Temperature Test, the unit underwent a defrost cycle to rid the outdoor coil of any accumulated frost, then prior to cycling the unit ''off'' and ''on'' it should be made to undergo a defrost. After defrost is completed and before starting the cycling process, the unit shall be operated continuously in the heating mode for a least 10 minutes to assure that equilibrium conditions have again been established for the unit and the room conditioning apparatus. Cycling the unit may begin when the test unit and room conditions are within the High Temperature Test condition tolerances specified in section 6.2.1 of this Appendix. Attention should be given to prevent defrost after the cycling process has begun.

The cycle times for variable-speed units is the same as the cyclic time in the cooling mode as specified in section 4.1.1.2 of this Appendix. Cyclic tests of split-type ductless units will be conducted without dampers, and the data cycle shall be preceded by a minimum of two cycles in which the indoor fan cycles on and off with the compressor. During the data cycle for the split type ductless units, the indoor fan will operate three minutes prior to compressor ''cut-on'' and remain on for three minutes after compressor ''cut-off''. The integration time for capacity and power will be from compressor ''cut-on'' time to indoor fan ''cut-off'' time. The fan power for the three minutes after compressor ''cut-off'' shall be subtracted from the integrated heating capacity. For split-type ductless systems which turn the indoor fan off during defrost, the indoor supply duct shall not be blocked.

4.2.1.3 *Test procedures for the frost accumulation test.* The defrost controls shall be set at the normal settings which most typify those encountered in Region IV as described in section 6.2.4 and 6.2.5 of this Appendix. The test room reconditioning equipment and the unit under test shall be operated for at least ½ hour prior to the start of a ''preliminary'' test period. The preliminary test period and the test period itself are to be conducted within the test tolerances given in section 4.2.3.3 of this Appendix. In some cases, the preliminary defrost cycle may be manually induced, however, it is important that the normally operating controls govern the defrost termination in all cases. For units containing defrost controls which are likely to cause defrost at intervals less than one hour when the unit is operating at the required test conditions, the preliminary test period shall start at the termination of a defrost cycle which automatically occurs and shall end at the termination of the next automatically occurring defrost cycle. For units containing defrost controls which are likely to cause defrost at intervals exceeding one hour when operating at the required test condition, the preliminary test period consists of ''heating-only'' preliminary operation for at least one hour, after which a defrost may be manually or automatically induced. The test period then begins at the termination of this defrost cycle and ends at the termination of the next automatically occurring defrost cycle. If the unit has not undergone a defrost after 12 hours, then the tests shall be concluded and the results calculated for this 12-hour period. For units which turn the indoor fan off during defrost the indoor supply duct shall be blocked during all defrost cycles to prevent natural or forced convection through the indoor unit. During defrost, resistance heaters normally installed with the unit shall be prevented from operating.

For units with variable-speed compressors, the frost accumulation test at the intermediate speed shall be conducted such that the unit will operate at a constant, intermediate compressor speed (k=i) as determined in section 4.1.1.4 of this Appendix. The following two equations may be used in lieu of the frost accumulation test for variable-speed.

$$\text{(a)}\ Q_{def}^{k=2}(35) = 0.90 * [Q_{ss}^{k=2}(17) + (Q_{ss}^{k=2}(47) - Q_{ss}^{k=2}(17))] * (35-17)/(47-17)$$

$$\text{(b)}\ E_{def}^{k=2}(35) = 0.985 * [E_{ss}^{k=2}(17) + (E_{ss}^{k=2}(47) - E_{ss}^{k=2}(17))] * (35-17)/(47-17)$$

4.2.1.4 *Test procedures for the low temperature test.* Where applicable, the High Temperature Test preparation and performance requirements shall also be used in the Low Temperature Test. The test room reconditioning equipment shall first be operated in a steady-state manner for at least one-half hour at equilibrium and at the specified test conditions. The unit shall then undergo a defrost, either automatic or manually induced. It is important that the unit terminate the defrost sequence by the action of its own defrost controls. The defrost controls are to remain at the same setting as specified in 4.2.1.3. At a time no earlier than 10 minutes after defrost termination, the test shall start. Test duration is one-half hour. For all units, defrost should be prevented during the one-half hour test period.

4.2.2 *Test instrumentation.*

4.2.2.1 *Test instrumentation for the high temperature test.* The indoor air flow rate shall be determined as described in Section 7.1 through 7.4 of ASHRAE Standard 37–78. This requires the construction of an air receiving chamber and discharge chamber separated by partition in which one or more nozzles are located. The receiving chamber is connected to the indoor air discharge side of the test specimen through a short plenum. The exhaust side of the air flow rate measuring device contains an exhaust fan with some

means to vary its capacity to obtain the desired external resistance to air flow rate. The exhaust side is then left open to the test room or is ducted through a conditioning apparatus and then back to the test specimen inlet. The static pressure across the nozzles, the velocity pressure, and the static pressure measurements at the nozzle throat shall be measured with manometers which will result in errors which are no greater than ±1.0 percent of indicated value and having minimum scale divisions not exceeding 2.0 percent of the reading. Static pressure and temperature measurements must be taken at the nozzle throat in order to obtain density of the air. The areas of the nozzles shall be determined by measuring their diameter with an error no greater than ±0.2 percent in four places approximately 45 degrees apart around the nozzle in each of two places through the nozzle throat, one at the outlets and the others in the straight section near the radius. The energy usage of the compressor, indoor and outdoor fan, and all other equipment components shall be measured with a watt-hour meter which is accurate to within ±0.5 percent of the quantity measured. Measurements of the air temperature entering and leaving the indoor coil or the difference between these two shall be made in accordance with the requirements of ASHRAE Standard 41 part 1. These temperatures shall be continuously recorded with instrumentation having a total system accuracy within ±0.3 °F of indicated value and a response time of 2.5 seconds or less. Temperature measurements are to be made upstream of the static pressure tap on the inlet and downstream of the static pressure taps on the outlet. The indoor and outdoor dry-bulb temperatures shall be continuously recorded with instrumentation which will result in an error no greater than ±0.3 °F of indicated value. The outdoor wet-bulb temperature shall be continuously recorded. Static pressure measurements in the ducts and across the unit shall be made in accordance with Section 8 of ASHRAE Standard 37–78 using equipment which will result in an error no greater than ±0.01 inch of water. Static pressure measurements shall be made and recorded at 5 minute intervals. All other data not continuously recorded shall be recorded at 10 minute intervals.

4.2.2.2 *Test instrumentation for the cycling test.* The air flow rate during the on-period of the Cyclic Test shall be the same agreed within ±1. percent as the air flow rate measured during the previously conducted High Temperature Test. All other instrumentation requirements are identical to 4.2.2.1 of this Appendix.

4.2.2.3 *Test instrumentation for the frost accumulation test.* The air flow rate for the Frost Accumulation Test shall be the same as described in 4.2.2.1. The indoor-side dry-bulb temperature and outdoor-side dry-bulb temperature shall be continuously recorded with instrumentation having a total system accuracy within ±0.3 °F of indicated value. The outdoor dew point temperature shall be determined with an error no greater than ±0.5 °F of indicated value using continuously recording instrumentation. All other data shall be recorded at 10 minute intervals during the heating cycle. Defrost initiation, termination and complete test cycle time (from defrost termination to defrost termination) shall be recorded. Defrost initiation is defined as the actuation (either automatically or manually) of the controls normally installed with the unit which cause it to alter its normal heating operation in order to eliminate possible accumulations of frost on the outdoor coil. Defrost termination occurs when the controls normally within the unit are actuated to change from defrost operation to normal heating operation. Provisions should be made so that instrumentation in capable of recording the cooling done during defrost as well as the total electrical energy usage during defrost. These data and the continuously recorded data need be the only data obtained during defrost.

4.2.2.4 *Test instrumentation for the low temperature test.* Instrumentation for the Low Temperature Test is identical to that of the High Temperature Test described in section 4.2.2.1 of this Appendix.

4.2.3 *Test tolerances.*

4.2.3.1 *Test tolerances for the high temperature test.* All tests shall be conducted within the tolerances specified in Section 6.2.1. Variation greater than those given shall invalidate the test. The heating capacity results by the indoor Air Enthalpy Method shall agree within 6 percent of the value determined by any other simultaneously conducted capacity test in order for the test to be valid.

4.2.3.2 *Test tolerances for the cyclic test.* The test condition tolerances and test operating tolerances for the on-period portion of the test cycle are specified in Section 6.2.2. Variation exceeding any specified test tolerance shall invalidate the test results.

4.2.3.3 *Test tolerances for the frost accumulation test.* Test condition and test operating tolerances for Frost Accumulation Tests are specified in Section 6.2.3. Test operating tolerances during heating applies when the unit is in the heating mode, except for the first 5 minutes after the termination of a defrost cycle. Test operating tolerance during defrost applies during a defrost cycle and during the first 5 minutes after defrost termination when the unit is operating in the heating mode. In determining whether the test condition tolerances are met, only the heating portion of the test period shall be used in calculating the average values. Variations exceeding the tolerances presented in Section 6.2.3 shall invalidate the test.

4.2.3.4 *Test tolerances for the low temperature test.* During the test period for the Low Temperature Test, the operating conditions shall be within the tolerances specified in Section 6.2.1 of this Appendix.

4.3 *Testing procedures for air source units which provide both heating and cooling.* The testing procedures for units which provide both heating and cooling shall be the same as those specified in Sections 4.1 and 4.2 of this Appendix. Also during the off-period of the dry-coil cooling test (test D), the switch-over valve shall remain in the cooling mode, unless the controls normally supplied with the unit are designed to reverse it, in which case the controls shall operate the valve. During the off-period of the cyclic heating test at 47 °F, the switch-over valve shall remain in the heating mode, unless the controls normally supplied with the unit are designed to reverse it, in which case the controls shall operate the valve.

5.0 Calculations for performance factors.

5.1 *Calculations of seasonal energy efficiency ratios (SEER) in air-source units.*

The testing data and results required to calculate the seasonal energy efficiency ratio (SEER) in Btu's per watt-hour shall include the following:

(i) Cooling capacities (Btu/hr) from tests A and B and, if applicable, the cooling capacity (Btu/hr) from test C and the total cooling done from test D (Btu's).

$\check{Q}_{ss}$ k (95F)
$\check{Q}_{ss}$ k (82F)
$\check{Q}_{ss}$, dry
$\check{Q}_{cyc}$, dry

(ii) Electrical power input to all components and controls (watts) from tests A, B, and if applicable the electrical power input to all components and controls (watts) from test C and the electrical usage (watt-hour) from test D.

$\check{E}_{ss}$ k (95F)
$\check{E}_{ss}$ k (82F)
$\check{E}_{ss}$ k, dry
$\check{E}_{cyc}$, dry

(iii) Indoor air flow rate (SCFM) and external resistance to indoor air flow (inches of water).

(iv) Air temperature (°F)
Outdoor dry bulb
Outdoor wet bulb
Indoor dry bulb
Indoor wet bulb

Where the cooling capacities $\check{Q}_{ss}$ k (95F), from test A, $\check{Q}_{ss}$ k (82), from test B, and Q_{ss}, dry, from test C, are calculated using the equations specified in section 3.7 of ASHRAE Standard 37–78. The total cooling done, Q_{cyc}, dry from test D, is calculated using equation (1) below.

Units which do not have indoor air circulating fans furnished as part of the model shall have their measured total cooling capacities adjusted by subtracting 1250 Btu/hr per 1,000 CFM of measured indoor air flow and adding to the total steady-state electrical power input 365 watts per 1,000 CFM of measured indoor air flow.

Energy efficiency ratios from tests A, B, and C, EER_A, EER_B, EER_{ss}, dry respectively, are each calculated as the ratio of the total cooling capacity in Btu/hr to the total electrical power input in watts.

Units which do not have indoor air circulating fans furnished as part of the model shall adjust their total cooling done and energy used in one complete cycle for the effect of circulating indoor air equipment power. The value to be used for the circulating indoor air equipment power shall be 1250 Btu/hr per 1,000 CFM of circulating indoor air. The energy usage required in one complete cycle required for indoor air circulation is the product of the circulating indoor air equipment power and the duration of time in one cycle that the circulating indoor air equipment is on. The total cooling done shall then be the measured cooling in one complete cycle minus the energy usage required for indoor air circulation in one complete cycle. The total electrical energy usage shall be the sum of the energy usage required for indoor air circulation in one complete cycle and the energy used by the remaining equipment components (compressor(s), outdoor fan, crankcase heater, transformer(s), etc.) in one complete test cycle.

Energy efficiency ratio from tests D, EER_{cyc} dry is calculated as the ratio of the total cooling done in Btu's to the total electrical energy usage in watt-hours.

The results of the cyclic and steady-state dry-coil performance tests shall be used in the following (4) equations:

$$(1) \qquad Q_{cyc,\,dry} = \frac{60 \times \dot{V} \times C_{pa} \times \Gamma}{[V_n' \times (1 + W_n)]}$$

where

$Q_{cyc,\,dry}$ = Total cooling over a cycle consisting of one compressor "off" period and one compressor "on" period (Btu's).

$\dot{V}$ = Indoor air flow rate (cfm) at the dry-bulb temperature, humidity ratio, and pressure existing in the region of measurement.

C_{pa} = Specific heat at constant pressure of air-water mixture per pound of dry air, (Btu/lb-°F).

V_n' = Specific volume of air-water mixture at the same dry-bulb temperature, humidity ratio, and pressure used in the determination of the indoor air flow rate (ft³/lb).

W_n = Humidity ratio (lb/lb).

and Γ (hr.-°F), which is described by the equation:

(2)

$$\Gamma = \int_{(\text{time indoor fan on})}^{(\text{time indoor fan off})} [T_{a1}(t) - T_{a2}(t)]\,dt$$

where

$T_{a1}(t)$ = Dry bulb temperature of air entering the indoor coil (°F) at time (t).

$T_{a2}(t)$ = Dry-bulb temperature of air leaving the indoor coil (°F) at time (t).

$$(3) \qquad CLF = \frac{Q_{cyc,\,dry}}{Q_{ss\,dry} \times \tau}$$

where

CLF = cooling load factor.

$Q_{ss\,dry}$ = Total steady-state cooling capacity from test C (Btu/hr).

τ = Duration of time (hours) for one complete cycle consisting of one compressor "on" time and one compressor "off" time.

The preceding equations are then used in the following equation to calculate a degradation coefficient C_D rounded to the nearest .01.

$$(4) \qquad C_D = \frac{1 - \dfrac{EER_{cyc,\,dry}}{EER_{ss,\,dry}}}{1 - CLF}$$

where

$EER_{ss,\,dry}$ = Energy efficiency ratio from test C, (Btu/watt-hr).

5.1.1 Method for calculating a SEER for units with single-speed compressor and single-speed condenser fans. The seasonal energy efficiency ratio for units employing single-speed compressors and single-speed condenser fans shall be based on the performance of test B and a method outlined in 2.1.1 and 3.1.1 of this Appendix to account for the cyclic performance.

The seasonal energy efficiency ratio in Btu's/watt-hour shall be determined by the equation:

$$SEER = PLF(0.5) \times EER_B$$

where

EER_B = Energy efficiency ratio determined from test B as outlined in 2.1.1.

$PLF(0.5)$ = Part-load performance factor when cooling load factor = 0.5 as determined from the equation:

$$PLF(0.5) = 1 - 0.5 \times C_D$$

where

C_D = Is the degradation coefficient described in 2.1.1 or as calculated in equation (4) above.

5.1.2 Method for calculating a SEER for units with single-speed compressors and multi-speed condenser fans. The seasonal energy efficiency ratio (SEER) for units employing single-speed compressors and multi-speed condenser fans shall be based on the energy efficiency ratio obtained for test B and the method outlined in 2.1.2 of this Appendix to account for the performance under cyclic conditions. The energy efficiency ratio for test B is obtained with the unit operating with the condenser fan speed which normally occurs at test B ambient conditions.

The seasonal energy efficiency ratio in Btu's/watt-hour shall be determined by the equation:

$$SEER = PLF(0.5) \times EER_B$$

where

EER_B = energy efficiency ratio determined from test B in 2.8

$PLF(0.5)$ = Part-load performance factor as determined from the equation:

$$PLF(0.5) = 1 - 0.5 \times C_D$$

where

C_D = The degradation coefficient described in 2.1.2 or as calculated in equation (4) above.

5.1.3 Method for calculating a SEER for units with two speed compressors or two compressors, or cylinder unloading. The calculation procedure described in this section shall be based on the performance of test A and B at each of the compressor speeds for two-speed compressor units, subject to the conditions on condenser fan speed described in 3.1.3.

Units operating with two compressors shall have the SEER calculated in the same manner as two-speed compressor units. The superscripted index $k = 1$ (and the term "low-speed") designates the compressor that normally operates at an outdoor dry-bulb temperature of 82° F and $k = 2$ (and the term "high speed") denotes operation with both compressors.

In order to evaluate the steady-state capacity $Q_{ss}^k(T_j)$, and power input, $E_{ss}^k(T_j)$, at temperature T_j for each compressor speed, $k=1$, $k=2$, the results of tests A and B from 5.1 shall be used in the following equation:

$$Q_{ss}^k(T_j)=Q_{ss}^k(95\text{ F})+\frac{Q_{ss}^k(82\text{ F})-Q_{ss}^k(95\text{ F})}{95-82}[33-(5\times j)]$$

where

$Q_{ss}^k(95\text{ F})$ = Steady-state capacity measured from test A as outlined in 2.1.3.

$Q_{ss}^k(82\text{ F})$ = Steady-state capacity measured from test B as outlined in 2.1.3.

$$E_{ss}^k(T_j)=E_{ss}^k(95\text{ F})+\frac{E_{ss}^k(82\text{ F})-E_{ss}^k(95\text{ F})}{95-82}[33-(5\times j)]$$

when

$E_{ss}^k(95\text{ F})$ = Electrical power input measured using test A as outlined in 2.1.3.

$E_{ss}^k(82\text{ F})$ = Electrical power input measured from using test A as outlined in 2.1.3.

The building cooling load $BL(T_j)$ for the four cases described in section 5.1.3.1 through 5.1.3.4 shall be obtained from the following equation:

$$BL(T_j)=\frac{(5\times j)-3}{95-65}\times\frac{Q_{ss}^{k=2}(95\text{ F})}{1.1}$$

where

$Q_{ss}^{k=2}(95\text{ F})$ = Steady-state capacity measured from test A in 2.9 at the high compressor speed.

The value of the degradation coefficient $C_D^{k=1}$ for low compressor speed cycling and $C_D^{k=2}$ for high speed on/off compressor cycling is determined as described in section 2.1.3, or as calculated above in equation (1).

5.1.3.1 Units operating at low compressor speed ($k=1$) for which the steady-state cooling capacity, $Q_{ss}^{k=1}(T_j)$, is greater than or equal to the building cooling load, $BL(T_j)$, evaluate the following equations:

(1) $$X^{k=1}=\frac{BL(T_j)}{Q_{ss}^{k=1}(T_j)}.$$

where

$X^{k=1}$ = Load factor.

$BL(T_j)$ = Building cooling load (Btu/hr) at temperature (T_j) from section 5.1.3.

$Q_{ss}^{k=1}(T_j)$ = Steady-state cooling capacity (Btu/hr) at temperatures (T_j) from section 5.1.3.

(2) $$\frac{Q(T_j)}{N}=X^{k=1}\times Q_{ss}^{k=1}(T_j)\times\frac{n_j}{N}$$

where

$\frac{Q(T_j)}{N}$ = ratio of total cooling (Btu) in temperature bin j to the number of temperature bin hours.

$\frac{n_j}{N}$ is the fractional number of hours in temperature bin j from 6.1.2.

(3) $$\frac{E(T_j)}{N}=\frac{X^{k=1}\times E_{ss}^{k=1}(T_j)}{PLF^{k=1}}\times\frac{n_j}{N}$$

where

$\frac{E(T_j)}{N}$ = ratio of Energy usage (watt-hr.) in temperature bin j to the number of temperature bin hours.

$$PLF^{k=1}=1-C_D^{k=1}(1-X^{k=1}).$$

Where C_D the degradation coefficient as described in section 2.1.3 or as calculated above in equation (1).

5.1.3.2 When a unit must alternate between high ($k=2$) and low ($k=1$) compressor speeds to satisfy the building cooling load at a temperature T_j, evaluate the following equations:

(1) $$X^{k=1}=\frac{Q_{ss}^{k=2}(T_j)-BL(T_j)}{Q_{ss}^{k=2}(T_j)-Q_{ss}^{k=1}(T_j)}$$

(2) $$X^{k=2}=1-X^{k=1}$$

(3) $$\frac{Q(T_j)}{N}=[X^{k=1}\times Q_{ss}^{k=1}(T_j)+X^{k=2}\times Q_{ss}^{k=2}(T_j)]\times\frac{n_j}{N}$$

(4) $$\frac{E(T_j)}{N}=[X^{k=1}\times E_{ss}^{k=1}(T_j)+X^{k=2}\times E_{ss}^{k=2}(T_j)]\times\frac{n_j}{N}$$

5.1.3.3 When a unit must cycle on and off at high compressor speed ($k=2$) in order to satisfy the building cooling load at a temperature T_j, evaluate the equations provided in section 5.1.3.1 replacing ($k=1$) data with the ($k=2$) data.

5.1.3.4 When a unit operates continuously at high compressor speed ($k=2$) at an outdoor temperature T_j evaluate the following equations:

(1) $$\frac{Q(T_j)}{N}=Q_{ss}^{k=2}(T_j)\times\frac{n_j}{N}$$

(2) $$\frac{E(T_j)}{N}=E_{ss}^{k=2}(T_j)\times\frac{n_j}{N}$$

5.1.3.5 Calculate the SEER in Btu's/watt-hr. using the values for the terms

$$\frac{Q(T_j)}{N}$$

and

$$\frac{E(T_j)}{N}$$

as determined at each temperature bin according to the applicable conditions described in sections 5.1.3.1 through 5.1.3.4 as follows:

$$SEER=\frac{\sum_{j=1}^{8}\frac{Q(T_j)}{N}}{\sum_{j=1}^{8}\frac{E(T_j)}{N}}$$

5.1.4 Method for calculating a SEER for units with two speed compressor, two compressor or cylinder unloading capable of varying the sensible to total capacity (S/T) ratio. Multi-speed compressor and two-speed compressor units capable of varying the sensible to total capacity ratio (S/T) shall have the seasonal energy efficiency ratio determined as described in section 5.1.3. For such units, the mode of operation selected to determine the steady-state capacities $Q_{ss}{}^{k}(95)$, $Q_{ss}{}^{k}(82)$, $E_{ss}{}^{k}(95)$, $E_{ss}{}^{k}(82)$, and power inputs at each compressor speed $k=1$, $k=2$, for tests A and B is outlined in section 2.10.

5.1.5 *Seasonal energy efficiency ratio for air-source units with triple-capacity compressors.* (Reserved)

5.1.6 *Seasonal energy efficiency ratio for air-source units with variable-speed compressors.* For air-source units with variable-speed compressors, the seasonal energy efficiency ratio (SEER), shall be defined as follows:

$$\text{SEER}=\frac{\sum_{j=1}^{8}\frac{Q(T_j)}{N}}{\sum_{j=1}^{8}\frac{E(T_j)}{N}}$$

where the number of hours in the jth temperature bin ($\frac{n_j}{N}$) is defined in Table 6.1.2 of this Appendix.

The SEER shall be determined by evaluating three cases of the compressor operation. Case I is the same as specified in 5.1.3.1 with the exception that the quantities $Q_{ss}^{k=1}(T_j)$ and $E_{ss}^{k=1}(T_j)$ shall be calculated by the following equations:

$$Q_{ss}^{k=1}(T_j)=Q_{ss}^{k=1}(82°F)+\frac{Q_{ss}^{k=1}(67°F)-Q_{ss}^{k=1}(82°F)}{82-67}*(82-T_j)$$

$$E_{ss}^{k=1}(T_j)=E_{ss}^{k=1}(82°F)+\frac{E_{ss}^{k=1}(67°F)-E_{ss}^{k=1}(82°F)}{82-67}*(82-T_j)$$

Case II is when the compressor operates at any intermediate (k=v) speed between the maximum (k=2) and minimum (k=1) speeds to satisfy the building cooling load. Evaluate the following equations:

$$Q_{ss}^{k=v}(T_j)=BL(T_j)$$

$$E_{ss}^{k=v}(T_j)=\frac{Q_{ss}^{k=v}(T_j)}{\text{EER}_{ss}^{k=v}(T_j)}$$

$$\frac{Q(T_j)}{N}=Q_{ss}^{k=v}(T_j)*\frac{n_j}{N}$$

$$\frac{E(T_j)}{N}=E_{ss}^{k=v}(T_j)*\frac{n_j}{N}$$

where

$E_{ss}^{k=v}(T_j)$=the electrical power input required by the unit to deliver capacity matching the building load at temperature T_j.

$Q_{ss}^{k=v}(T_j)$=the capacity delivered by the unit matching the building load at temperature T_j.

$EER_{ss}^{k=v}(T_j)$=the steady-state energy efficiency ratio at temperature T_j and an intermediate speed at which the unit capacity matches the building load.

Before the steady-state intermediate speed energy efficiency ratio, $EER_{ss}^{k=v}(T_j)$, can be calculated, the unit performance has to be evaluated at the compressor speed (k=i) at which the intermediate speed test was conducted. The capacity of the unit at any temperature T_j when the compressor operates at the intermediate speed (k=i) may be determined by:

$$Q_{ss}^{k=i}(T_j)=Q_{ss}^{k=i}(87)+M_Q(T_j-87)$$

where

$Q_{ss}^{k=i}(87)$=the capacity of the unit at 87°F determined by the intermediate cooling steady-state test.

M_Q = slope of the capacity curve for the intermediate compressor speed (k = i)

$$M_Q = \frac{Q_{ss}^{k=1}(82) - Q_{ss}^{k=1}(67)}{82-67} * (1 - N_Q) + N_Q * \frac{Q_{ss}^{k=2}(95) - Q_{ss}^{k=2}(82)}{95-82}$$

$$N_Q = \frac{Q_{ss}^{k=i}(87) - Q_{ss}^{k=1}(87)}{Q_{ss}^{k=2}(87) - Q_{ss}^{k=1}(87)}$$

Once the equation for $Q_{ss}^{k=i}(T_j)$ has been determined, the temperature where $Q_{ss}^{k=i}(T_j) = BL(T_j)$ can be found. This temperature is designated as (T_{vc}). The electrical power input for the unit operating at the intermediate compressor speed (k = i) and the temperature (T_{vc}) is determined by:

$$E_{ss}^{k=i}(T_{vc}) = E_{ss}^{k=i}(87) + M_E\,(T_{vc} - 87)$$

where

$E_{ss}^{k=i}(87)$ = the electrical power input of the unit at 87°F determined by the intermediate cooling steady-state test

M_E = slope of the electrical power input curve for the intermediate compressor speed (k = i)

$$M_E = \frac{E_{ss}^{k=1}(82) - E_{ss}^{k=1}(67)}{82-67} * (1 - N_E) + N_E \frac{E_{ss}^{k=2}(95) - E_{ss}^{k=2}(82)}{95-82}$$

$$N_E = \frac{E_{ss}^{k=i}(87) - E_{ss}^{k=1}(87)}{E_{ss}^{k=2}(87) - E_{ss}^{k=1}(87)}$$

The energy efficiency ratio of the unit, $EER_{ss}(T_{vc})$, at the intermediate speed (k = i) and temperature T_{vc} can be calculated by the equation:

$$EER_{ss}^{k=i}(T_{vc}) = \frac{Q_{ss}^{k=i}(T_{vc})}{E_{ss}^{k=i}(T_{vc})}$$

Similarly, energy efficiency ratios at temperatures T_1 and T_2 can be calculated by the equations:

$$EER_{ss}^{k=1}(T_1) = \frac{Q_{ss}^{k=1}(T_1)}{E_{ss}^{k=1}(T_1)}$$

$$EER_{ss}^{k=2}(T_2) = \frac{Q_{ss}^{k=2}(T_2)}{E_{ss}^{k=2}(T_2)}$$

where

T_1 = temperature at which the unit, operating at the minimum compressor speed, delivers capacity equal to the building load ($Q_{ss}^{k=1}(T_1) = BL(T_1)$), found by equating the capacity equation [$(Q_{ss}^{k=1}(T_j)$] and building load equation [$BL(T_j)$] in section 5.1.3 and solving for temperature.

T_2 = temperature at which the unit, operating at the maximum compressor speed, delivers capacity equal to the building load ($Q_{ss}^{k=2}(T_2) = BL(T_2)$), found by equating the capacity equation [$(Q_{ss}^{k=2}(T_j)$] and the building equation [$BL(T_j)$] in section 5.1.3 and solving for temperature.

$EER_{ss}^{k=1}(T_1)$ = the steady state energy efficiency ratio at the minimum compressor speed at temperature T_1.

$EER_{ss}^{k=2}(T_2)$ = the steady state energy efficiency ratio at the maximum compressor speed at temperature T_2.

$E_{ss}^{k=1}(T_1)$ = the electrical power input at the minimum compressor speed at temperature T_1, calculated by the equation in section 5.1.3.

$E_{ss}^{k=2}(T_2)$ = the electrical power input at the maximum compressor speed at temperature T_2, calculated by the equation in section 5.1.3.

The energy efficiency ratio, $EER_{ss}^{k=v}(T_j)$, shall be calculated by the following equation:

$$EER_{ss}^{k=v}(T_j) = A + B * T_j + C * T_j^{\,2}$$

where coefficients A, B, and C shall be evaluated using the following calculation steps:

$$D = \frac{T_2^{\,2} - T_1^{\,2}}{T_{vc}^{\,2} - T_1^{\,2}}$$

$$B=\frac{\mathrm{EER}_{ss}^{k=1}(T_1)-\mathrm{EER}_{ss}^{k=2}(T_2)-D(\mathrm{EER}_{ss}^{k=1}(T_1)-\mathrm{EER}_{ss}^{k=i}(T_{vc}))}{T_1-T_2-D^*(T_1-T_{vc})}$$

$$C=\frac{\mathrm{EER}_{ss}^{k=1}(T_1)-\mathrm{EER}_{ss}^{k=2}(T_2)-B^*(\mathrm{T}_1-\mathrm{T}_2)}{\mathrm{T}_1{}^2-\mathrm{T}_2{}^2}$$

$$A=\mathrm{EER}_{ss}^{k=2}(T_2)-B^*T_2-C^*T_2{}^2$$

Case III is the same as specified in 5.1.3.4. The quantities $Q_{ss}^{k=1}(T_j)$ and $E_{ss}^{k=2}(T_j)$ and $E_{ss}^{k=2}(T_j)$ shall be calculated by the equations prescribed in 5.1.3.

5.1.7. *Seasonal energy efficiency ratio for split-type ductless systems.* For split-type ductless systems, SEER shall be defined as specified in section 5.1.1 of this Appendix for each combination set of indoor coils to be used with a common outdoor unit.

5.2 *Calculation of Heating Seasonal Performance Factors (HSPF) for Air-Source Units.*

The testing data and results required to calculate the heating seasonal performance factor (HSPF), in Btu's per watt-hr, shall include the following:

(i) Heating capacities (Btu/hr) from the indoor air enthalpy method for the High Temperature Tests, and the total heating done (Btu's) for the cyclic and frost accumulation tests.

$\dot{Q}_{ss}(47)$ or $\dot{Q}_{ss}(62)$.
$\dot{Q}_{ss}(17)$.
$Q_{cyc}(47)$.
$Q_{DEF}(35)$.

(ii) Electrical power input to all components (watts) for the steady state tests, and the electrical usage (watt-hours) for the cyclic and frost accumulation tests

$\dot{E}_{ss}(47)$ or $\dot{E}_{ss}(62)$.
$\dot{E}_{ss}(17)$.
$E_{cyc}(47)$.
$E_{DEF}(35)$.

(iii) Indoor air flow rate (SCFM) and external resistance to indoor air flow (inches of water).

(iv) Air temperature (°F)
Outdoor dry bulb
Outdoor wet bulb or dew point
Indoor dry bulb and
Indoor wet bulb.

(v) Data as specified in Table II of ASHRAE Standard 37–78.

Where the heating capacities $\dot{Q}_{ss}(47)$, $\dot{Q}_{ss}(62)$ and $\dot{Q}_{ss}(17)$ and the indoor air flow rate are calculated using the equations specified in section 3.8.1 and 7.4 of ASHRAE standard 37–78. The total heating done, $Q_{cyc}(47)$ and $Q(_{DEF}35)$ are calculated using the equations below.

Units not having an indoor fan as part of the model tested shall add 1250 Btu/hr per 1,000 SCFM of indoor air handled to the measured capacity to obtain the total heating capacity, $\dot{Q}_{ss}(17)$, $\dot{Q}_{ss}(47)$ or $\dot{Q}_{ss}(62)$, and add 365 watts per 1,000 SCFM of indoor air handled to the measured power to obtain the total power input, $\dot{E}_{ss}(17)$, $\dot{E}_{ss}(47)$, or $\dot{E}_{ss}(62)$, to the unit.

The coefficients of performance (COP) for the High Temperature Tests $COP_{ss}(62)$ or $COP_{ss}(47)$, and Low Temperature Test, $COP_{ss}(17)$, are calculated as the ratio of the heating capacity in Btu/hr to the product of 3.413 and the power inputs to the indoor fan in watts and the power inputs to the remaining equipment components (including all controls) in watts.

Units which do not have indoor air circulating fans furnished as part of the model shall have their total heating done ($Q_{cyc}(47)$) and energy used $E_{cyc}(47)$ in one complete cycle adjusted for the effect of circulating indoor air equipment power. For units tested without an indoor fan as part of the model, $Q_{cyc}(47)$ shall be increased by a quantity of heat equal to the product of 1250 Btu/hr per 1,000 SCFM, the length of the on-period of the test cycle in hours, and the flow rate of indoor air circulated in units of 1,000 SCFM. The total energy usage, $E_{cyc}(47)$, shall be the sum of the energy usage required for air circulation during the test cycle and the energy used by the remaining equipment components (including all controls) during the test cycle. Units not having an indoor fan as part of the model tested, shall set the energy required for indoor air circulation equal to the quantity given by the product of 365 watts per 1000 SCFM, the length of the on-period of the test cycle in hours, and the rate of indoor air circulated in units of 1000 SCFM.

The cyclic coefficient of performance, $COP_{cyc}(47)$ is calculated as the ratio of the total heating done ($Q_{cyc}(47)$) in Btu's to the product of 3.413 Btu/watt-hour and the total energy usage ($E_{cyc}(47)$) in watt hours.

The net heating capacity, $\dot{Q}_{DEF}(35)$ (Btu/hr), is the total net heating done over the test period (including any credit for the indoor fan heat) divided by the total length of the test period, in hours.

For units tested without indoor fans, the value determined for $\dot{Q}_{DEF}(35)$ below shall be increased by a quantity of heat equal to the product of 1250 Btu/hr per 1000 SCFM, the length of time in hours during the Frost Accumulation Test that there was indoor air circulating, and the average flow rate of indoor air circulated in units of 1000 SCFM.

The total energy usage, $E_{DEF}(35)$ shall be the sum of the energy usage required for indoor-air circulation during the test period and the energy used by the remaining equipment components during the test period. Units not having an indoor fan as part of the model tested, shall set the energy required for indoor air circulation equal to the quantity given by the product of 365 watts per 1000 SCFM, the length of time in hours during the Frost Accumulation Test that there was indoor air circulating, and the average flow rate of indoor air circulated in units of 1000 SCFM.

The actual heating done during the Cyclic Test, $Q_{cyc}(47)$, shall be determined using the following equation:

$$(1) \qquad Q_{cyc}(47)=\frac{60\times\dot{V}\times C_{pa}\times\Gamma}{[V_n{}^1\times(1+W_n)]}$$

where

$\dot{V}$ = the flow rate during the on-period calculated in accordance with section 7.4 of ASHRAE Standard 37–78 in CFM.
C_{pa} = Specific heat at constant pressure of air-water mixture per pound of dry air, (Btu/lb-°F).
$V_n{}^1$ = Specific volume of air-water mixture at the same dry-bulb temperature, humidity ratio, and pressure used in the determination of the indoor air flow rate (ft³/lb).
W_n = Humidity ratio (lb/lb).

and Γ (hr-°F), which is described by the equation:

$$\Gamma=\int_{\text{(time indoor fan on)}}^{\text{(time indoor fan off)}}[T_{a2}(t)-T_{a1}(t)]dt$$

where

$T_{a1}(t)$ = Dry-bulb temperature of air entering the indoor coil (°F) at time (t).
$T_{a2}(t)$ = Dry-bulb temperature of air leaving the indoor coil (°F) at time (t).

The net heating, Q_{DEF} (35) in Btu's done during the test period shall be determined using the following equation:

$$(2) \qquad Q_{DEF}(35)=\frac{60\times\bar{\dot{V}}\times C_{pa}\times\Gamma}{[V_n{}^1\times(1+W_n)]}$$

where

$\bar{\dot{V}}$ = the average of the air flow rate calculated at four or more time intervals throughout the heating phase of the test using the equation in section 7.4 of ASHRAE Standard 37–78.
C_{pa} = Specific heat at constant pressure of air-water mixture per pound of dry air, (Btu/lb−°F).
$V_n{}^1$ = Specific volume of air-water mixture at the same dry-bulb temperature, humidity ratio, and pressure used in the determination of the indoor air flow rate (ft³/lb).
W_n = Humidity ratio (lb/lb).

and Γ (hr.−°F), which is described by the equation:

$$\Gamma=\int_{\text{(time of defrost termination}}^{\text{(time of next defrost termination)}}\times[T_{a2}(t)-T_{a1}(t)]dt$$

where

$T_a{}^1(t)$ = Dry-bulb temperature of air entering the indoor coil (°F) at time (t).
$T_a{}^2(t)$ = Dry-bulb temperature of air leaving the indoor coil (°F) at time (t).

The cyclic degradation coefficient shall be calculated as follows:

$$(3) \qquad C_D=\frac{1-\dfrac{COP_{cyc}(47)}{COP_{ss}(47)}}{1-HLF}$$

where

C_D = the cyclic degradation coefficient rounded to the nearest .01
$COP_{cyc}(47)$ as defined above
$COP_{ss}(47)$ as defined above
HLF is the heating load factor calculated as follows:

$$HLF=\frac{Q_{cyc}(47)}{\dot{Q}_{ss}(47)\times\tau}$$

where

$Q_{cyc}(47)$ as defined above
$\dot{Q}_{ss}(47)$ as defined above
τ = Duration of time (hours) for one complete cycle consisting of one compressor "on" time and one compressor "off" time.

For air-source units that are equipped with "demand defrost control systems", the value for HSPF, as determined above shall be multiplied by an enhancement factor F_{def} to compensate for improved performance not measured in the Frost Accumulation Test. The factor, F_{def} depends on the number of defrost cycles in a 12-hour period and should be calculated as follows:

$$F_{def}=1+0.03*(1-(T_{test}-90)/(T_{max}-90))$$

where

F_{def} = demand defrost credit (used as a multiplier to HSPF)

T_{test} = time between defrost terminations in minutes or 90 (whichever is greater)

T_{max} = maximum time between defrosts allowed by controls, in minutes or 720 (whichever is less)

5.2.1 Calculation of the heating seasonal performance factor (HSPF) for air-source heat pumps with single speed compressors.

For each climatic region listed in section 6.2.4, and for design heating requirements equal to both the standardized minimum and maximum design heating requirements defined below, calculate the HSPF defined as:

$$HSPF = \frac{\sum_j \frac{n_j}{N} BL(T_j)}{\left[\sum_j \frac{n_j}{N} \frac{X(T_j)}{PLF(X)} \delta(T_j) \dot{E}(T_j)(T_j) + \sum_j \frac{RH(T_j)}{N}\right]},$$

where

$j = 1,2,3, \ldots, n$ corresponds to the jth temperature bin.

n = total number of non-zero temperature bins in the climatic region.

$T_j = (67 - 5_j)$ is the representative temperature of the jth bin, (°F).

Σ_j = indicated the quantity following the symbol is to be summed over all temperature bins.

$\frac{RH(T_j)}{N}$ = supplementary resistance heat term at temperature T_j required in those cases where the heat pump automatically turns off ($T_j < T_{off}$) or when it is needed to meet the balance of the building heating requirements. (watts).

$\frac{n_j}{N}$ = is the number of hours in the jth temperature bin divided by $N \equiv \sum_j n_j$ and is referred to as the "fractional hours in j^{th} temperature bin".

3.413 = is a conversion factor which converts watt hours to Btu.

$BL(T_j)$ = building load at temperature T_j, (Btu/hr).

$\delta(T_j)$ = heat pump low temperature cut-out factor.

$X(T_j)$ = heat pump heating load factor.

$PLF(X)$ = heat pump part load factor.

The quantities $BLCT_j)$, $\delta(T_j)$, $X(T_j)$, $PLF(X)$ and

$$\frac{RH(T_j)}{N}$$

are defined by the following equations:

$$BL(T_j) = \left(\frac{65 - T_j}{65 - T_{OD}}\right)(C)(DHR)$$

where

(C) = 0.77 is a correction factor which tends to improve the agreement between calculated and measured building loads

(DHR) = the minimum and maximum design heating requirement which the heat pump is likely to encounter when installed in a residence, rounded off to the nearest standardized DHR in section 6.26 in Btu/hr

where

(minimum design heating requirement)

$$= \begin{cases} \dot{Q}_{ss}(47)\ \frac{(65 - T_{OD})}{60}, \text{ for regions I, II, III, IV, and VI} \\ \dot{Q}_{ss}(47), \text{ for region V} \end{cases}$$

and

maximum design heating requirement

$$= \begin{cases} 2\dot{Q}_{ss}(47)\ \frac{(65 - T_{OD})}{60}, \text{ for regions I, II, III, IV, and VI} \\ 2.2\dot{Q}_{ss}(47), \text{ for region V} \end{cases}$$

where

$\dot{Q}_{ss}$ (47) is the heat pump capacity measured during the High Temperature Test @ 47° F

T_{OD} is the outdoor design temperature given in section 6.2.4

$$\delta(T_j) = \begin{cases} 0;\ T_j \leq T_{OFF} \text{ or } \frac{\dot{Q}(T_j)}{(3.413)(\dot{E}(T_j))} < 1 \\ \frac{1}{2};\ T_{OFF} < T_j \leq T_{ON} \text{ and } \frac{\dot{Q}(T_j)}{(3.413)(\dot{E}(T_j))} \geq 1 \\ 1;\ T_j > T_{ON} \text{ and } \frac{\dot{Q}(T_j)}{(3.413)(\dot{E}(T_j))} \geq 1 \end{cases}$$

$$X(T_j) = \begin{cases} \frac{BL(T_j)}{\dot{Q}(T_j)};\ \dot{Q}(T_j) \geq BL(T_j) \\ 1;\ \dot{Q}(T_j) \leq BL(T_j) \end{cases}$$

$$PLF(X) = 1 - C_D(1 - X(Tj))$$

$$\frac{RH(T_j)}{N} = \frac{[BL(T_j) - \dot{Q}(T_j)X(T_j)\delta(T_j)]\frac{n_j}{N}}{3.413}$$

where

T_{OFF} = the outdoor temperature that the compressor is automatically shut off at (If no such temperature exists, T_j is always greater than T_{OFF} and T_{ON}.)

T_{ON} = the outdoor temperature that the compressor is automatically turned on (if applicable) if designed for low temperature automatic shut-off.

C_D = degradation factor determined described in section 5.2 and 2.2.1.

In using the above equation to calculate HSPF, the heat pump capacity in Btu/hr, $\dot{Q}$, and the power in watts, $\dot{E}$, shall be obtained as follows:

$$\dot{Q}(T_j)=\begin{cases}\dot{Q}_{ss}(17)+\dfrac{(\dot{Q}_{ss}(47)-\dot{Q}_{ss}(17))\times(T_j-17)}{30}, & T_j\geq 45°\text{F or } T_j\leq 17°\text{F}\\[2ex] \dot{Q}_{ss}(17)+\dfrac{(\dot{Q}_{DEF}(35)-\dot{Q}_{ss}(17))\times(T_j-17)}{18}, & 17°\text{F}<T_j<45°\text{F}\end{cases}$$

$$\dot{E}(T_j)=\begin{cases}\dot{E}_{ss}(17)+\dfrac{(\dot{E}_{ss}(47)-\dot{E}_{ss}(17))\times(T_j-17)}{30}, & T_j\geq 45°\text{F or } T_j\leq 17°\text{F}\\[2ex] \dot{E}_{ss}(17)+\dfrac{(\dot{E}_{DEF}(35)-\dot{E}_{ss}(17))\times(T_j-17)}{18}, & 17°\text{F}<T_j<45°\text{F}\end{cases}$$

where $\dot{Q}_{ss}(47)$ and $\dot{E}_{ss}(47)$ and $\dot{Q}_{DEF}(35)$ and $\dot{E}_{ss}(47)$ and $\dot{Q}_{ss}(17)$ and $\dot{E}_{ss}(17)$ are the capacities (in Btu/hr) and powers (in watts), measured during the High Temperature Test, the Frost Accumulation test, and the Low Temperature Test, respectively.

Once the maximum and minimum HSPF and operating cost values have been obtained for each region, the HSPF and operating cost shall be determined for each standardized design heating requirement (see section 6.2.6) between the maximum and minimum design heating requirements by means of interpolation.

5.2.2 Calculation of the heating seasonal performance factor (HSPF) for air source heat pumps with a two-speed compressor, two compressors, or cylinder unloading.

For each climatic region listed in section 6.2.4, and for design heating requirements equal to both the standardized minimum and maximum design heating requirements defined below, calculate the HSPF defined as:

$$HSPF=\frac{\sum_j \frac{n_j}{N}\,BL(T_j)}{\left[\sum_j \frac{E(T_j)}{N}+\sum_j \frac{RH(T_j)}{N}\right]}$$

where

$\sum_j$ as defined in 5.2.1

$\frac{n_j}{N}$ as defined in 5.2.1

T_j as defined in 5.2.1

and $BL(T_j)$ is the building load at temperature T_j, in Btu/hr, calculated by:

$$BL(T_j)=\left(\frac{65-T_j}{65-T_{OD}}\right)\times(C)\times(DHR)$$

where

(C) = 0.77 is a correction factor which tends to improve the agreement between calculated and measured building loads

(DHR) = the minimum and maximum design heating requirement which the heat pump is likely to encounter when installed in a residence, rounded off to the nearest standardized DHR in section 6.2.6 in Btu's per hour

where

(minimum design heating requirement)

$$=\begin{cases}\dot{Q}_{ss}^{(k=2)}(47)\,\dfrac{(65-T_{OD})}{60}, & \text{for regions I, II, III, IV, and VI}\\[2ex] \dot{Q}_{ss}^{(k=2)}(47), & \text{for region V}\end{cases}$$

and

(maximum design heating requirement)

$$=\begin{cases}2\dot{Q}_{ss}^{k=2}(47)\,\dfrac{(65-T_{OD})}{60}, & \text{for regions I, II, III, IV and VI}\\[2ex] 2.2\dot{Q}_{ss}^{k=2}(47) & \text{for region V}\end{cases}$$

where

$\dot{Q}_{ss}^{(k=2)}(47)$ is the heat pump capacity measured during the high temperature performance test at 47°F, with the unit operating at the high compressor speed or with both compressors in operation, in Btu/hr

T_{OD} is the outdoor design temperature given in section 6.2.4 in degrees °F.

NOTE: The superscript ($k=1$) and ($k=2$) refer to the heat pump operating at low speed or single compressor operation and high speed or two compressor operation respectively.

$\frac{E(T_j)}{N}$ is the heat pump electrical energy usage in the jth temperature bin divided by the total number of bin hours and is evaluated according to the four possible cases of heat pump operation denoted below in watts.

$\frac{RH(T_j)}{N}$ as defined in 5.2.1 and is evaluated according to the four possible cases of heat pump operation denoted below (in watts).

Case I.—Units operating at low compressor speed or with a single compressor, i.e., $k=1$, for which the building heating load, $BL(T_j)$ is less than or equal to the heating capacity, $\dot{Q}^{k=1}(T_j)$.

$$BL(T_j) \leq \dot{Q}^{k=1}(T_j)$$

$$\frac{E(T_j)}{N} = \frac{\dot{E}^{k=1}(T_j)X^{k=1}(T_j)\delta'(T_j)}{PLF^{k=1}}\frac{n_j}{N}$$

$$\frac{RH(T_j)}{N} = \frac{\frac{n_j}{N}BL(T_j)[1-\delta'(T_j)]}{3.413}$$

$$X^{k=1}(T_j) = \frac{BL(T_j)}{\dot{Q}^{k=1}(T_j)}$$

$$PLF^{k=1} = 1 - C_D^{k=1}(1 - X_j^{k=1})$$

$$\delta'(T_j) = \begin{cases} 0; & T_j \leq T_{OFF} \\ \frac{1}{2}; & T_{OFF} < T_j \leq T_{ON} \\ 1; & T_j > T_{ON} \end{cases}$$

Case II.— Units alternating between high speed or two compressor operation ($k=2$) and low speed or single compressor operation ($k=1$) to satisfy the building heating load at temperature T_j.

$$\dot{Q}^{k=1}(T_j) < BL(T_j) < \dot{Q}^{k=2}(T_j)$$

$$\frac{E(T_j)}{N} = [\dot{E}^{k=1}(T_j)X^{k=1}(T_j) + \dot{E}^{k=2}(T_j)X^{k=2}(T_j)]\delta'(T_j)\frac{n_j}{N}$$

$$\frac{RH(T_j)}{N} = \frac{\frac{n_j}{N}BL(T_j)[1-\delta'(T_j)]}{3.413}$$

$$X^{k=1}(T_j) = \frac{Q^{k=2}(T_j) - BL(T_j)}{\dot{Q}^{k=2}(T_j) - \dot{Q}^{k=1}(T_j)}$$

$$X^{k=2}(T_j) = 1 - X^{k=1}(T_j)$$

$$\delta'(T_j) \begin{cases} 0; & T_j \leq T_{OFF} \\ \frac{1}{2}; & T_{OFF} < T_j \leq T_{ON} \\ 1; & T_j > T_{ON} \end{cases}$$

Case III.—Units cycling on and off at high compressor speed or cycling both compressors on and off together ($k=2$) in order to satisfy the building heating load at temperature T_j.

$$\dot{Q}^{k=1}(T_j) < BL(T_j) < \dot{Q}^{k=2}(T_j)$$

$$\frac{E(T_j)}{N} = \frac{\dot{E}^{k=2}(T_j)X^{k=2}(T_j)\delta''(T_j)\frac{n_j}{N}}{PLF^{k=2}}$$

$$\frac{RH(T_j)}{N} = \frac{\frac{n_j}{N}BL(T_j)[1-\delta''(T_j)]}{3.413}$$

$$X^{k=2}(T_j) = \frac{BL(T_j)}{\dot{Q}^{k=2}(T_j)}$$

$$PLF^{k=2} = 1 - C_D^{k=2}(1 - X^{k=2}(T_j))$$

$$\delta''(T_j) = \begin{cases} 0; & T_j \leq T_{OFF} \\ \frac{1}{2}; & T_{OFF} < T_j \leq T_{ON} \\ 1; & T_j > T_{ON} \end{cases}$$

Case IV.—Units operating continuously at high compressor speed or with both compressors in continuous operation ($k=2$) in order to satisfy the building heating load at temperature T_j.

$$BL(T_j) \geq \dot{Q}^{k=2}(T_j)$$

$$\frac{E(T_j)}{N} = \dot{E}^{k=2}(T_j)X^{k=2}(T_j)\delta''(T_j)\frac{n_j}{N}$$

$$\frac{RH(T_j)}{N} = \frac{[BL(T_j) - \dot{Q}^{k=2}(T_j)X^{k=2}(T_j)\delta''(T_j)]\frac{n_j}{N}}{3.413}$$

$$X^{k=2}(T_j) = 1.0$$

$$\delta''(T_j) = \begin{cases} 0; & T_j \leq T_{OFF} \text{ or } \frac{\dot{Q}^{k=2}(T_j)}{(3.413)(\dot{E}^{k=2}(T_j))} < 1 \\ \frac{1}{2}; & T_{OFF} < T_j \leq T_{ON} \text{ and } \frac{\dot{Q}^{k=2}(T_j)}{(3.413)(\dot{E}^{k=2}(T_j))} \geq 1 \\ 1; & T_j \geq T_{ON} \text{ and } \frac{\dot{Q}^{k=2}(T_j)}{(3.413)(\dot{E}^{k=2}(T_j))} \geq 1 \end{cases}$$

Where in each of the above cases

$X(T_j)$ = heat pump heating load factor.
PLF = heat pump part load factor (not required for cases II and IV.)
$\delta''(T_j)$ = heat pump low temperature cut-out factor.
T_{off} as defined in 5.2.1.
T_{on} as defined in 5.2.1.
$C_D^{k=2}$ = the part load degradation factor described in section 2.2.1 and 5.2 for the unit cycling at high compressor speed or with both compressors simultaneously cycling (if applicable).
$C_D^{(k=1)}$ = the part load degradation factor described in section 2.2.1 and 5.2 for the unit cycling at low compressor speed or with the single compressor that normally operates at low heating loads.

$$\dot{Q}^{k=1}(T_j)=\begin{cases}\dot{Q}_{ss}^{k=1}(47) + \dfrac{(\dot{Q}_{ss}^{k=1}(62)-\dot{Q}_{ss}^{k=1}(47))\times(T_j-47)}{15}; & T_j\geq 40^\circ\text{ F}\\ \dot{Q}_{ss}^{k=1}(17) + \dfrac{(\dot{Q}_{DEF}^{k=1}(35)-\dot{Q}_{ss}^{k=1}(17))\times(T_j-17)}{18}; & 17^\circ\text{ F}\leq T_j<40^\circ\text{ F}\\ \dot{Q}_{ss}^{k=1}(17) + \dfrac{(\dot{Q}_{ss}^{k=1}(47)-\dot{Q}_{ss}^{k=1}(17))\times(T_j-17)}{30}; & T_j<17^\circ\text{ F}\end{cases}$$

$$\dot{Q}^{k=2}(T_j)=\begin{cases}\dot{Q}_{ss}^{k=2}(17) + \dfrac{(\dot{Q}_{ss}^{k=2}(47)-\dot{Q}_{ss}^{k=2}(17))\times(T_j-17)}{30}; & T_j\geq 45^\circ\text{ F or } T_j\leq 17^\circ\text{ F}\\ \dot{Q}_{ss}^{k=2}(17) + \dfrac{(\dot{Q}_{DEF}^{k=2}(35)-\dot{Q}_{ss}^{k=2}(17))\times(T_j-17)}{18}; & 17^\circ\text{ F}<T_j<45^\circ\text{ F}\end{cases}$$

$$\dot{E}^{k=1}(T_j)=\begin{cases}\dot{E}_{ss}^{k=1}(47) + \dfrac{(\dot{E}_{ss}^{k=1}(62)-\dot{E}_{ss}^{k=1}(47))\times(T_j-47)}{15}; & T_j\geq 40^\circ\text{ F}\\ \dot{E}_{ss}^{k=1}(17) + \dfrac{(\dot{E}_{DEF}^{k=1}(35)-\dot{E}_{ss}^{k=1}(17))\times(T_j-17)}{18}; & 17^\circ\text{ F}\leq T_j<40^\circ\text{ F}\\ \dot{E}_{ss}^{k=1}(17) + \dfrac{(\dot{E}_{ss}^{k=1}(47)-\dot{E}_{ss}^{k=1}(17))\times(T_j-17)}{30}; & T_j<17^\circ\text{ F}\end{cases}$$

$$\dot{E}^{k=2}(T_j)=\begin{cases}\dot{E}_{ss}^{k=2}(17) + \dfrac{(\dot{E}_{ss}^{k=2}(47)-\dot{E}_{ss}^{k=2}(17))\times(T_j-17)}{30}; & T_j\geq 45^\circ\text{ F or } T_j\leq 17^\circ\text{ F}\\ \dot{E}_{ss}^{k=2}(17) + \dfrac{(\dot{E}_{DEF}^{k=2}(35)-\dot{E}_{ss}^{k=2}(17))\times(T_j-17)}{18}; & 17^\circ\text{ F}<T_j<45^\circ\text{ F}\end{cases}$$

For each of the six regions specified in section 6.2.5, calculate the heating seasonal performance factors and seasonal operating costs corresponding to the standardized maximum and minimum design heating requirements and for all other standardized design heating requirements (see section 6.2.6) between the maximum and the minimum.

5.2.3 *Heating seasonal performance factor for air-source units with triple-capacity compressors.* (Reserved)

5.2.4 *Heating seasonal performance factor for units with variable-speed compressors.* For units with variable-speed compressors, the heating seasonal performance factor (HSPF) is defined by the following equation:

$$HSPF = \frac{\sum_j \frac{n_j}{N} BL(T_j)}{\left(\sum_j \frac{E(T_j)}{N} + \sum_j \frac{RH(T_j)}{N} \right)}$$

where all symbols in the above equations are as defined in 5.2.2.

The minimum and maximum heating design requirements, DHR_{min} and DHR_{max}, which a variable-speed heat pump is likely to encounter, shall be evaluated as described for two-speed units in 5.2.2 with the option of using the nominal capacity, $Q_{ss}^{k=n}(47°F)$, in lieu of the maximum speed capacity, $Q_{ss}^{k=2}(47)$, in the prescribed equations if the manufacturer performed the nominal capacity test.

In evaluation of HSPF, three cases are considered, the quantities $\frac{E(T_j)}{N}$ and $\frac{RH(T_j)}{N}$ shall be calculated depending on compressor mode of operation.

Case I

The compressor operates at the minimum speed (k=1) for which the building heating load, $BL(T_j)$, is less than or equal to the heating capacity, $Q_{ss}^{k=1}(T_j)$.

Calculations shall be performed as prescribed for two-speed systems in Case I of 5.2.2 with the exception that system capacity $Q_{ss}^{k=1}(T_j)$, and power, $E_{ss}^{k=1}(T_j)$, shall be calculated by the following equations:

$$Q_{ss}^{k=1}(T_j) = Q_{ss}^{k=1}(47) + \frac{Q_{ss}^{k=1}(62) - Q_{ss}^{k=1}(47)}{15} * (T_j - 47)$$

$$E_{ss}^{k=1}(T_j) = E_{ss}^{k=1}(47) + \frac{E_{ss}^{k=1}(62) - E_{ss}^{k=1}(47)}{15} * (T_j - 47)$$

Case II

The compressor operates at any intermediate (k=v) speed between the maximum speed (k=2) and minimum (k=1) speed to satisfy the building load and evaluate the following equations:

$$Q^{k=v}(T_j) = BL(T_j)$$

$$\frac{Q(T_j)}{N} = Q^{k=v}(T_j) * \frac{n_j}{N}$$

$$E^{k=v}(T_j) = \frac{Q^{k=v}(T_j)}{3.413 * COP^{k=v}(T_j)}$$

$$\frac{E(T_j)}{N} = E^{k=v}(T_j) * \frac{n_j}{N}$$

where

$Q^{k=v}(T_j)$ = capacity delivered by the unit at any intermediate speed between the minimum and maximum compressor speed matching the building load at temperature T_j

$E^{k=v}(T_j)$ = the electrical power input required by the unit at temperature T_j to deliver capacity matching the building load

$COP^{k=v}(T_j)$ = the coefficient of performance at which the unit delivers capacity matching the building load at temperature T_j

Before the coefficient of performance, $COP^{k=v}(T_j)$, can be calculated, the unit performance has to be evaluated at the compressor speed (k=i) at which the intermediate speed test was conducted. The capacity of the unit at any temperature T_j when compressor operates at the intermediate speed (k=i) may be determined by:

$$Q_{def}^{k=i}(T_j) = Q_{def}^{k=i}(35) + M_Q(T_j - 35)$$

where

$Q_{def}^{k=i}(35)$ = the capacity of the unit at 35°F determined at the intermediate compressor speed (k=i) in the frost accumulation test

M_Q = slope of the capacity curve for the intermediate compressor speed (k=i)

$$M_Q = \frac{Q_{ss}^{k=1}(62) - Q_{ss}^{k=1}(47)}{62 - 47} * (1 - N_Q) + N_Q \frac{Q_{def}^{k=2}(35) - Q_{ss}^{k=2}(17)}{35 - 17}$$

$$N_Q = \frac{Q_{def}^{k=i}(35) - Q_{ss}^{k=1}(35)}{Q_{def}^{k=2}(35) - Q_{ss}^{k=1}(35)}$$

Once the equation for $Q^{k=i}(T_j)$ has been determined, the temperature where $Q_{def}^{k=i}(T_j) = BL(T_j)$ can be found. This temperature is designated at T_{vh}. A separate T_{vh} shall be determined for each design heating requirement.

The electrical power input for the unit operating at the intermediate compressor speed (k=v) and at the temperature (T_{vh}) is determined by:

$$E_{def}^{k=i}(T_{vh}) = E_{def}^{k=i}(35) + M_E(T_{vh} - 35)$$

where

$E_{def}^{k=i}(35)$ = the electrical power input of the unit at 35°F determined at the intermediate compressor speed (k=i) in the frost accumulation test

M_E = slope of the electrical power input curve for the intermediate compressor speed (k=i)

$$M_E = \frac{E_{ss}^{k=1}(62) - E_{ss}^{k=1}(47)}{62-47} * (1 - N_E) + N_E \frac{E_{def}^{k=2}(35) - E_{ss}^{k=2}(17)}{35-17}$$

$$N_E = \frac{E_{def}^{k=i}(35) - E_{ss}^{k=1}(35)}{E_{def}^{k=2}(35) - E_{ss}^{k=1}(35)}$$

The coefficient of performance, $COP^{k=i}(T_{vh})$, at the intermediate speed (k=i) and temperature T_{vh} can be calculated by the equation:

$$COP^{k=i}(T_{vh}) = \frac{Q_{def}^{k=i}(T_{vh})}{3.413 * E_{def}^{k=i}(T_{vh})}$$

Similarly, coefficients of performance at temperature T_3 and T_4 can be calculated by the equations:

$$COP^{k=1}(T_3) = \frac{Q^{k=1}(T_3)}{3.413 * E^{k=1}(T_3)}$$

$$COP^{k=2}(T_4) = \frac{Q^{k=2}(T_4)}{3.413 * E^{k=2}(T_4)}$$

where

T_3 = temperature at which the unit, operating at the minimum compressor speed, delivers capacity equal to the building load ($Q^{k=1}(T_3) = BL(T_3)$), found by equating the capacity by using the equation $Q^{k=1}(T_j)$ (at $T_j \geq 40°F$) equal to the building load equation $BL(T_j)$ as identified in section 5.2.2 of this Appendix and solving for temperature

T_4 = temperature at which the unit, operating at the maximum, delivers capacity equal to the building load ($Q^{k=2}(T_4) = BL(T_4)$), found by setting the equation for capacity $Q^{k=2}(T_j)$ equal to the equation for building load $BL(T_j)$ from the two-speed procedure in section 5.2.2 and solving for temperature

$COP^{k=1}(T_3)$ = the coefficient of performance at the minimum compressor speed at temperature T_3

$COP^{k=2}(T_4)$ = the coefficient of performance at the maximum compressor speed at temperature T_4

$Q^{k=1}(T_3)$ = steady-state capacity at the minimum compressor speed at temperature T_3, using equations for $Q^{k=1}(T_j)$ from the two-speed procedure

$Q^{k=2}(T_4)$ = steady-state capacity at the maximum compressor speed at temperature T_4, calculated using the equation for $Q^{k=2}(T_j)$ of the two-speed procedure.

$E^{k=1}(T_3)$ = the electrical power input at the minimum compressor speed at temperature T_3, calculated by using the equation for $E^{k=1}(T_j)$ (where $T_j \geq 40°F$) from the two-speed procedure in section 5.2.2 of this Appendix

$E^{k=2}(T_4)$ = the electrical power input at the maximum compressor speed at temperature T_4, calculated by using the equation for $E^{k=2}(T_j)$ from the two-speed procedure in section 5.2.2 of this Appendix

The coefficient of performance, $COP^{k=v}(T_j)$, shall be calculated by the following equation:

$$COP^{k=v}(T_j) = A + B * T_j + C * T_j^2$$

where coefficients A, B and C shall be evaluated using the following calculations step:

$$D = \frac{T_3^{\,2} - T_4^{\,2}}{T_{rh}^{\,2} - T_4^{\,2}}$$

$$B=\frac{\mathrm{COP}^{k=2}(T_4)-\mathrm{COP}^{k=1}(T_3)-D^*[\mathrm{COP}^{k=2}(T_4)-\mathrm{COP}^{k=1}(T_{th})]}{T_4-T_3-D^*(T_4-T_{th})}$$

$$C=\frac{\mathrm{COP}^{k=2}(T_4)-\mathrm{COP}^{k=1}(T_3)-B^*(T_4-T_3)}{T_4^{\,2}-T_3^{\,2}}$$

$$A=\mathrm{COP}^{k=2}(T_4)-B^*T_4-C^*T_4^{\,2}$$

Case III

The compressor operates at the maximum speed (k = 2) for which the building heating load, $BL(T_j)$, is greater than or equal to the heating capacity, $Q_{ss}^{k=2}(T_j)$.

Calculations shall be performed as prescribed for two-speed systems in Case IV of 5.2.2.

5.2.5 *Heating seasonal performance factor for split-type ductless systems.* For split-type ductless systems, HSPF shall be defined as specified in section 5.2.1 of this Appendix. Separate values of HSPF shall be determined for each corresponding combination set of indoor coils used in the development of SEER as specified in Section 5.1.7. The calculations used shall be the same as those used for units with the same type of compressor.

5.3 *Calculations of the Actual Representative Regional Annual Performance Factors for Air Source Central Air Conditioners (Heat Pumps) Which Provide Both Heating and Cooling.*

5.3.1 Calculation of actual regional annual performance factors (APF_A) for a particular location and for each standardized design heating requirement.

$$(APF_A)=\frac{(CLH_A)(\dot{Q}_{ss}^{k}(95\mathrm{F}))+(HLH_A)(DHR)(C)}{\dfrac{(CLH_A)(\dot{Q}_{ss}^{k}(95\mathrm{F}))}{(SEER)}+\dfrac{(HLH_A)(DHR)(C)}{(HSPF)}}$$

where

(CLH_A) is the actual cooling load hours for the particular location, determined from the map in section 6.1.3.
$(\dot{Q}_{ss}^{k}(95\mathrm{F}))$ is defined in 5.1.
(DHR) is defined in 5.2.2.
(C) is defined in 5.2.2.
(HLH_A) is the actual heating load hours for the particular location determined from the map in section 6.2.5.
$(SEER)$ is the seasonal energy efficiency ratio determined in section 5.1.
$(HSPF)$ is the heating seasonal performance factors as determined in section 5.2 for each standardized design heating requirement within the particular location's region or for the actual design heating requirement if known.

where the particular location's region is determined from the map in section 6.2.5 and, the standardized design heating requirements within the region are determined in sections 5.2 and 6.2.6.

5.3.2 Calculation of representative regional annual performance factors (APF_R) for each region and for each standardized design heating requirement.

$$(APF_R)=\frac{(CLH_R)(\dot{Q}_{ss}^{k}(95\mathrm{F}))+(HLH_R)(DHR)(C)}{\dfrac{(CLH_R)(\dot{Q}_{ss}^{k}(95\mathrm{F}))}{SEER}+\dfrac{(HLH_R)(DHR)(C)}{HSPF}}$$

$(\dot{Q}_{ss}^{k}(95\mathrm{F}))$ is defined in 5.1.
(DHR) is defined in 5.2.2.
(C) is defined in 5.2.2.

where

(CLH_R) is the representative cooling load hours for each heating load hours region, as determined in section 6.3.

(HLH_R) is the representative heating load hours for each region as determined in section 6.2.5.

$(SEER)$ is the seasonal energy efficiency ratio as determined in section 5.1.

$(HSPF)$ is the heating seasonal performance factor as determined in section 5.2 for each region and for each standardized design heating requirement within each region.

where the regions are listed in section 6.2.5 and, the standardized design heating requirements within the regions are determined in sections 5.2 and 6.2.6.

6.0 Reference material

6.1 *Cooling reference material.*

6.1.1 *Test operating and test condition tolerance for cyclic dry-coil tests.*

Readings, remarks	Test operating tolerance [1]	Test condition tolerance [2]
Outdoor dry-bulb air temperature, Fahrenheit: Entering	2.0	0.5
Indoor dry-bulb air temperature, Fahrenheit: Entering	2.0	0.5
Indoor wet-bulb air temperature, Fahrenheit: Entering	(3)	(3)
After the first 30 sec after compressor startup:		
External resistance to airflow, inches water	0.05	0.02
Nozzle pressure drops, percent of reading	2.0	

Readings, remarks	Test operating tolerance [1]	Test condition tolerance [2]
Electrical voltage inputs to the test unit, percent	2.0	

[1] Total observed range.
[2] Variation of average from specified test condition.
[3] Shall at no time exceed that value of the wet-bulb temperature which results in the production of condensate by the indoor coil at the dry-bulb temperature existing for the air entering the indoor portion of the unit.

6.1.2 *Distribution of fractional hours in temperature bins to be used for calculation of the SEER for 2-speed compressor and 2-compressor units.*

Bin No. j:	Bin temperature range (degrees Fahrenheit)	Representative temperature bin for (degrees Fahrenheit)	Fraction of total temperature bin hours n_j/N
1	65–69	67	.214
2	70–74	72	.231
3	75–79	77	.216
4	80–84	82	.161
5	85–89	87	.104
6	90–94	92	.052
7	95–99	97	.018
8	100–104	102	.004

6.1.3 Distribution of Actual Cooling Load Hours (CLH_A) Throughout the United States

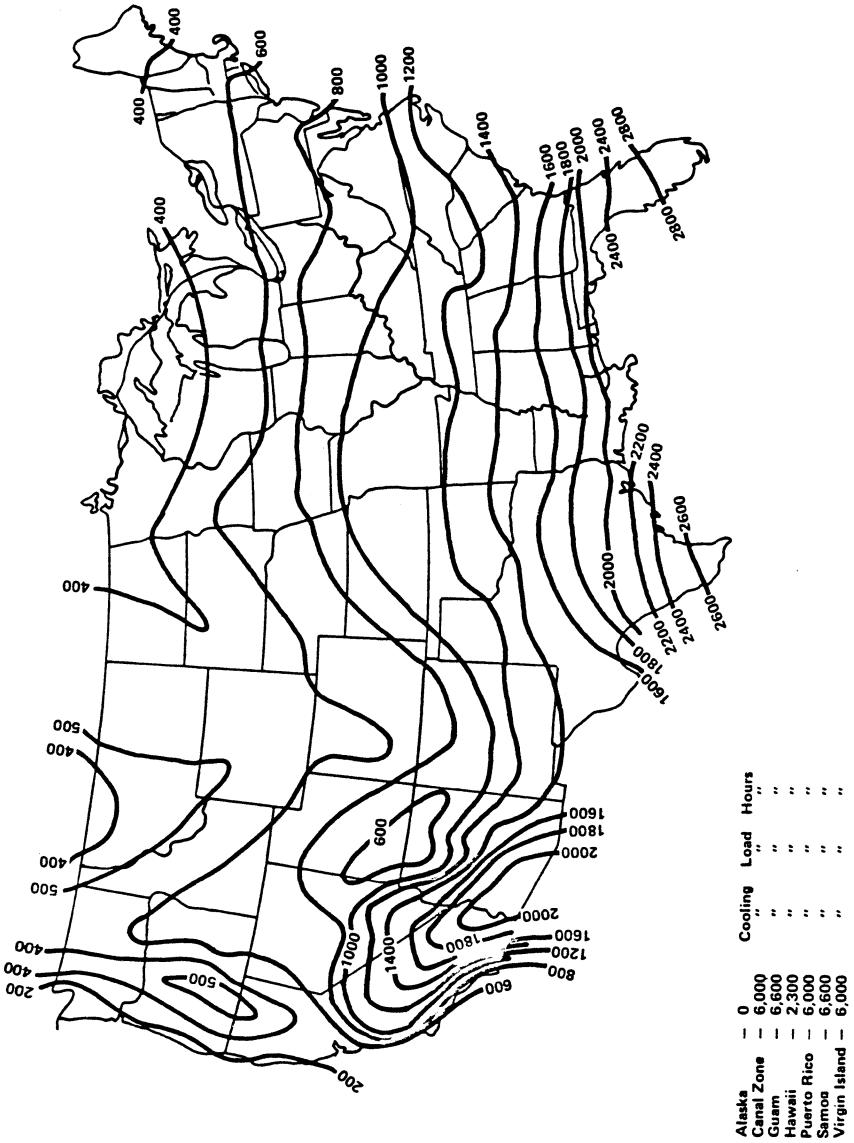

6.2 *Heating reference material.*

6.2.1 *Test operating and test condition tolerance for Steady-State High Temperature Test [at 47 °F (8.3 °C) or 62 °F (16.7 °C)] and Low Temperature Test [at 17 °F (−8.3 °C)].*

	Test operating[1] tolerance	Test condition[2] tolerance
Indoor dry-bulb, °F:		
Entering	2.0	0.5
Leaving	2.0	.....
Indoor wet-bulb, °F:		
Entering	1.0	.....
Leaving	1.0	.....

	Test operating [1] tolerance	Test condition [2] tolerance
Outdoor dry-bulb, °F:		
Entering	2.0	0.5
Leaving	2.0	.....
Outdoor wet-bulb, °F:		
Entering	1.0	0.3
Leaving	1.0	.....
External resistance to air flow, inches of water	.05	.02
Electrical voltage, percent	2.0	.....

[1] Test operating tolerance is the maximum permissible variation of any measurement. When expressed as a percentage, the maximum allowable variation is the specified percentage of the average value.

[2] Test condition tolerance is the maximum permissible variation of the average value of the measurement from the standard or desired test condition.

6.2.2 *Test operating and test condition tolerances for the on-period portion of cyclic performance tests.*

	Test operating tolerances [1]	Test condition tolerance [2]
Indoor dry-bulb, °F:		
Entering	2.0	0.5
Leaving	.....	.....
Indoor wet-bulb, °F:		
Entering	1.0	.....
Leaving	.....	.....
Outdoor dry-bulb, °F:		
Entering	2.0	0.5
Leaving	.....	.....
Outdoor wet-bulb, °F:		
Entering	2.0	1.0
Leaving	.....	.....
External resistance to air-flow, inches of water	.05	.02
Electrical voltage, percent	2.0	.....

[1] Test operating tolerance is the maximum permissible variation of any measurement. When expressed as a percentage, the maximum allowable variation is the specified percentage of the average value. (Applies after the first 30 seconds after compressor start-up.)

[2] Test condition tolerance is the maximum permissible variation of the average value of the measurement from the standard or desired test condition.

6.2.3 *Test operating and test tolerances for frost accumulation tests.*

	Testing operating tolerance [1]		Test condition tolerance [2] (heating portion only)
	During heating	During defrost	
Indoor dry-bulb, °F:			
Entering	2.0	[3] 4.0	0.5
Leaving	.....	.....	.....
Indoor wet-bulb, °F:			
Entering	1.0	.....	.....
Leaving	.....	.....	.....
Outdoor dry-bulb, °F:			
Entering	2.0	10.0	1.0
Leaving	.....	.....	.....
Outdoor dew-point, °F:			
Entering	1.5	.....	0.7
Leaving	.....	.....	.....
External resistance to air-flow, inches of water	.05	.....	.02
Electrical voltage, percent	2.0	.....	.....

[1] Test operating tolerance is the maximum permissible variation of any measurement. When expressed as a percentage, the maximum allowable variation is the specified percentage of the average value. Test Operating Tolerance During Heating applies when the heat pump is in the heating mode, except for the first 5 minutes after termination of a defrost cycle. Test Operating Tolerance During Defrost applies during a defrost cycle and during the first 5 minutes after the termination of a defrost cycle when the heat pump is operating in the heating mode.

[2] Test condition tolerance is the maximum permissible variation of the average value of the measurement from the standard or desired test condition. Test Condition Tolerance applies only when the heat pump is operating in the heating mode.

[3] Not applicable during defrost if the indoor fan is off.

6.2.4 *Distribution of fractional hours in temperature bins, heating load hours and outdoor design temperature for the different climatic regions.*

Fractional hours		Region					
Bin No.	T_j (°F)	I	II	III	IV	V	VI
		Heating Load Hours, HLH					
		750	1,250	1,750	2,250	2,750	[1] 2,750
		Outdoor Design Temperature, T_{OD}, for the region					
		37	27	17	5	-10	30
j=1	62	.291	.215	.153	.132	.106	.113
2	57	.239	.189	.142	.111	.092	.206
3	52	.194	.163	.138	.103	.086	.215
4	47	.129	.143	.137	.093	.076	.204
5	42	.081	.112	.135	.100	.078	.141
6	37	.041	.088	.118	.109	.087	.076
7	32	.019	.056	.092	.126	.102	.034
8	27	.005	.024	.047	.087	.094	.008
9	22	.001	.008	.021	.055	.074	.003
10	17	0	.002	.009	.036	.055	0
11	12	0	0	.005	.026	.047	0
12	7	0	0	.002	.013	.038	0
13	2	0	0	.001	.006	.029	0
14	-3	0	0	0	.002	.018	0

Fractional hours		Region					
Bin No.	T_j (°F)	I	II	III	IV	V	VI
15	-8	0	0	0	.001	.010	0
16	-13	0	0	0	0	.005	0
17	-18	0	0	0	0	.002	0
18	-23	0	0	0	0	.001	0

[1] Pacific Coast Region.

6.2.5 Actual heating load hours (HLH_A) and regional heating load hours (HLH_R) for the United States

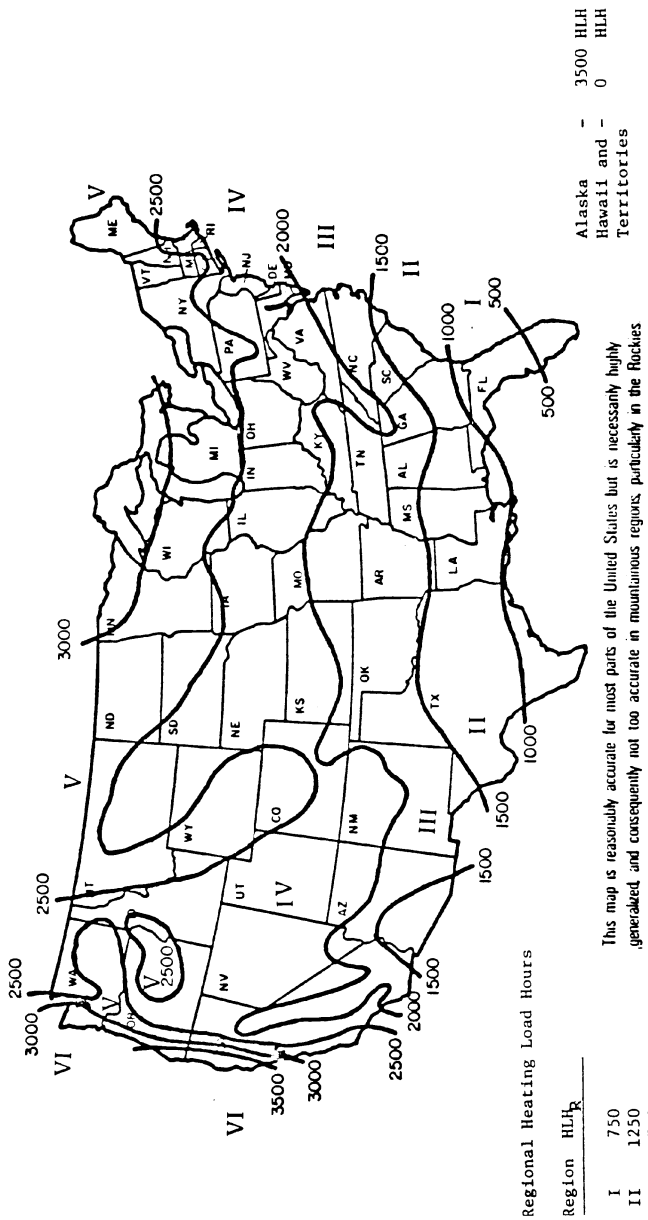

Region	HLH_R
I	750
II	1250
III	1750
IV	2250
V	2750
VI	2750

6.2.6 *Standard Design Heating Requirements (Btu/hr)*

5,000	25,000	50,000	90,000
10,000	30,000	60,000	100,000
15,000	35,000	70,000	110,000
20,000	40,000	80,000	130,000

6.3 *Representative Cooling Load Hours (CLH_R) for Each Heating Load Hours Region.*

Region	CLH_R	HLH_R
I	2,400	750
II	1,800	1,250
III	1,200	1,750
IV	800	2,250
V	400	2,750
VI	200	2,750

6.4 *Ground Water Temperature Map (Reserved).*

[44 FR 76707, Dec. 27, 1979, as amended at 54 FR 6076, Feb. 7, 1989]

EFFECTIVE DATE NOTE: At 70 FR 59135, Oct. 11, 2005, Appendix M to Subpart B of part 430 was revised, effective Apr. 10, 2006. For the convenience of the user the revised text follows:

APPENDIX M TO SUBPART B OF PART 430—UNIFORM TEST METHOD FOR MEASURING THE ENERGY CONSUMPTION OF CENTRAL AIR CONDITIONERS AND HEAT PUMPS

1. DEFINITIONS

2. TESTING CONDITIONS

2.1 Test room requirements.
2.2 Test unit installation requirements.
2.2.1 Defrost control settings.
2.2.2 Special requirements for units having a multiple-speed outdoor fan.
2.2.3 Special requirements for multi-split air conditioners and heat pumps, and systems composed of multiple mini-split units (outdoor units located side-by-side) that would normally operate using two or more indoor thermostats.
2.2.4 Wet-bulb temperature requirements for the air entering the indoor and outdoor coils.
2.2.4.1 Cooling mode tests.
2.2.4.2 Heating mode tests.
2.2.5 Additional refrigerant charging requirements.
2.3 Indoor air volume rates.
2.3.1 Cooling tests.
2.3.2 Heating tests.
2.4 Indoor coil inlet and outlet duct connections.
2.4.1 Outlet plenum for the indoor unit.
2.4.2 Inlet plenum for the indoor unit.
2.5 Indoor coil air property measurements and air damper box applications.
2.5.1 Test set-up on the inlet side of the indoor coil: For cases where the inlet damper box is installed.
2.5.1.1 If the section 2.4.2 inlet plenum is installed.
2.5.1.2 If the section 2.4.2 inlet plenum is not installed.
2.5.2 Test set-up on the inlet side of the indoor unit: For cases where no inlet damper box is installed.
2.5.3 Indoor coil static pressure difference measurement.
2.5.4 Test set-up on the outlet side of the indoor coil.
2.5.4.1 Outlet air damper box placement and requirements.
2.5.4.2 Procedures to minimize temperature maldistribution.
2.5.5 Dry bulb temperature measurement.
2.5.6 Water vapor content measurement.
2.5.7 Air damper box performance requirements.
2.6 Airflow measuring apparatus.
2.7 Electrical voltage supply.
2.8 Electrical power and energy measurements.
2.9 Time measurements.
2.10 Test apparatus for the secondary space conditioning capacity measurement.
2.10.1 Outdoor Air Enthalpy Method.
2.10.2 Compressor Calibration Method.
2.10.3 Refrigerant Enthalpy Method.
2.11 Measurement of test room ambient conditions.
2.12 Measurement of indoor fan speed.
2.13 Measurement of barometric pressure.

3. TESTING PROCEDURES

3.1 General Requirements.
3.1.1 Primary and secondary test methods.
3.1.2 Manufacturer-provided equipment overrides.
3.1.3 Airflow through the outdoor coil.
3.1.4 Airflow through the indoor coil.
3.1.4.1 Cooling Certified Air Volume Rate.
3.1.4.1.1 Cooling Certified Air Volume Rate for Ducted Units.
3.1.4.1.2 Cooling Certified Air Volume Rate for Non-ducted Units.
3.1.4.2 Cooling Minimum Air Volume Rate.
3.1.4.3 Cooling Intermediate Air Volume Rate.
3.1.4.4 Heating Certified Air Volume Rate.
3.1.4.4.1 Ducted heat pumps where the Heating and Cooling Certified Air Volume Rates are the same.
3.1.4.4.2 Ducted heat pumps where the Heating and Cooling Certified Air Volume Rates are different due to indoor fan operation.
3.1.4.4.3 Ducted heating-only heat pumps.
3.1.4.4.4 Non-ducted heat pumps, including non-ducted heating-only heat pumps.
3.1.4.5 Heating Minimum Air Volume Rate.
3.1.4.6 Heating Intermediate Air Volume Rate.
3.1.4.7 Heating Nominal Air Volume Rate.
3.1.5 Indoor test room requirement when the air surrounding the indoor unit is not supplied from the same source as the air entering the indoor unit.
3.1.6 Air volume rate calculations.
3.1.7 Test sequence.

3.1.8 Requirement for the air temperature distribution leaving the indoor coil.

3.1.9 Control of auxiliary resistive heating elements.

3.2 Cooling mode tests for different types of air conditioners and heat pumps.

3.2.1 Tests for a unit having a single-speed compressor that is tested with a fixed-speed indoor fan installed, with a constant-air-volume-rate indoor fan installed, or with no indoor fan installed.

3.2.2 Tests for a unit having a single-speed compressor and a variable-speed variable-air-volume-rate indoor fan installed.

3.2.2.1 Indoor fan capacity modulation that correlates with the outdoor dry bulb temperature.

3.2.2.2 Indoor fan capacity modulation based on adjusting the sensible to total (S/T) cooling capacity ratio.

3.2.3 Tests for a unit having a two-capacity compressor.

3.2.4 Tests for a unit having a variable-speed compressor.

3.3 Test procedures for steady-state wet coil cooling mode tests (the A, A_2, A_1, B, B_2, B_1, E_V, and F_1 Tests).

3.4 Test procedures for the optional steady-state dry coil cooling mode tests (the C, C_1, and G_1 Tests).

3.5 Test procedures for the optional cyclic dry coil cooling mode tests (the D, D_1, and I_1 Tests).

3.5.1 Procedures when testing ducted systems.

3.5.2 Procedures when testing non-ducted systems.

3.5.3 Cooling mode cyclic degradation coefficient calculation.

3.6 Heating mode tests for different types of heat pumps, including heating-only heat pumps.

3.6.1 Tests for a heat pump having a single-speed compressor that is tested with a fixed speed indoor fan installed, with a constant-air-volume-rate indoor fan installed, or with no indoor fan installed.

3.6.2 Tests for a heat pump having a single-speed compressor and a variable-speed, variable-air-volume-rate indoor fan: capacity modulation correlates with outdoor dry bulb temperature.

3.6.3 Tests for a heat pump having a two-capacity compressor (see Definition 1.45), including two-capacity, northern heat pumps (see Definition 1.46).

3.6.4 Tests for a heat pump having a variable-speed compressor.

3.6.5 Additional test for a heat pump having a heat comfort controller.

3.7 Test procedures for steady-state Maximum Temperature and High Temperature heating mode tests (the $H0_1$, H1, $H1_2$, $H1_1$, and $H1_N$ Tests).

3.8 Test procedures for the optional cyclic heating mode tests (the $H0C_1$, H1C, and $H1C_1$ Tests).

3.8.1 Heating mode cyclic degradation coefficient calculation.

3.9 Test procedures for Frost Accumulation heating mode tests (the H_2, $H2_2$, $H2_V$, and $H2_1$ Tests).

3.9.1 Average space heating capacity and electrical power calculations.

3.9.2 Demand defrost credit.

3.10 Test procedures for steady-state Low Temperature heating mode tests (the H_3, $H3_2$, and $H3_1$ Tests).

3.11 Additional requirements for the secondary test methods.

3.11.1 If using the Outdoor Air Enthalpy Method as the secondary test method.

3.11.1.1 If a preliminary test precedes the official test

3.11.1.2 If a preliminary test does not precede the official test.

3.11.1.3 Official test.

3.11.2 If using the Compressor Calibration Method as the secondary test method.

3.11.3 If using the Refrigerant Enthalpy Method as the secondary test method.

3.12 Rounding of space conditioning capacities for reporting purposes.

4. CALCULATIONS OF SEASONAL PERFORMANCE DESCRIPTORS

4.1 Seasonal Energy Efficiency Ratio (SEER) Calculations.

4.1.1 SEER calculations for an air conditioner or heat pump having a single-speed compressor that was tested with a fixed-speed indoor fan installed, a constant-air-volume-rate indoor fan installed, or with no indoor fan installed.

4.1.2 SEER calculations for an air conditioner or heat pump having a single-speed compressor and a variable-speed variable-air-volume-rate indoor fan.

4.1.2.1 Units covered by section 3.2.2.1 where indoor fan capacity modulation correlates with the outdoor dry bulb temperature.

4.1.2.2 Units covered by section 3.2.2.2 where indoor fan capacity modulation is used to adjust the sensible to total cooling capacity ratio.

4.1.3 SEER calculations for an air conditioner or heat pump having a two-capacity compressor.

4.1.3.1 Steady-state space cooling capacity at low compressor capacity is greater than or equal to the building cooling load at temperature T_j, $\dot{Q}_c^{k=1}(T_j) \geq BL(T_j)$.

4.1.3.2 Unit alternates between high (k=2) and low (k=1) compressor capacity to satisfy the building cooling load at temperature T_j, $\dot{Q}_c^{k=1}(T_j) < BL(T_j) < \dot{Q}_c^{k=2}(T_j)$.

4.1.3.3 Unit only operates at high (k=2) compressor capacity at temperature T_j and its capacity is greater than the building cooling load, $BL(T_j) < \dot{Q}_c^{k=2}(T_j)$.

4.1.3.4 Unit must operate continuously at high (k=2) compressor capacity at temperature T_j, $BL(T_j) \geq \dot{Q}_c^{k=2}(T_j)$.

4.1.4 SEER calculations for an air conditioner or heat pump having a variable-speed compressor.

4.1.4.1 Steady-state space cooling capacity when operating at minimum compressor speed is greater than or equal to the building cooling load at temperature T_j, $\dot{Q}_c^{k=1}(T_j) \geq BL(T_j)$.

4.1.4.2 Unit operates at an intermediate compressor speed (k=i) in order to match the building cooling load at temperature T_j, $\dot{Q}_c^{k=1}(T_j) < BL(T_j) < \dot{Q}_c^{k=2}(T_j)$.

4.1.4.3 Unit must operate continuously at maximum (k=2) compressor speed at temperature T_j, $BL(T_j) \geq \dot{Q}_c^{k=2}(T_j)$.

4.2 Heating Seasonal Performance Factor (HSPF) Calculations.

4.2.1 Additional steps for calculating the HSPF of a heat pump having a single-speed compressor that was tested with a fixed-speed indoor fan installed, a constant-air-volume-rate indoor fan installed, or with no indoor fan installed.

4.2.2 Additional steps for calculating the HSPF of a heat pump having a single-speed compressor and a variable-speed, variable-air-volume-rate indoor fan.

4.2.3 Additional steps for calculating the HSPF of a heat pump having a two-capacity compressor.

4.2.3.1 Steady-state space heating capacity when operating at low compressor capacity is greater than or equal to the building heating load at temperature T_j, $\dot{Q}_h^{k=1}(T_j) \geq BL(T_j)$.

4.2.3.2 Heat pump alternates between high (k=2) and low (k=1) compressor capacity to satisfy the building heating load at a temperature T_j, $\dot{Q}_h^{k=1}(T_j)$ $BL(T_j) < \dot{Q}_h^{k=2}(T_j)$.

4.2.3.3 Heat pump only operates at high (k=2) compressor capacity at temperature T_j and its capacity is greater than the building heating load, $BL(T_j) < \dot{Q}_h^{k=2}(T_j)$.

4.2.3.4 Heat pump must operate continuously at high (k=2) compressor capacity at temperature T_j, $BL(T_j) \geq \dot{Q}_h^{k=2}(T_j)$.

4.2.4 Additional steps for calculating the HSPF of a heat pump having a variable-speed compressor.

4.2.4.1 Steady-state space heating capacity when operating at minimum compressor speed is greater than or equal to the building heating load at temperature T_j, $\dot{Q}_h^{k=1}(T_j) \geq BL(T_j)$.

4.2.4.2 Heat pump operates at an intermediate compressor speed (k=i) in order to match the building heating load at a temperature T_j, $\dot{Q}_h^{k=1}(T_j) < BL(T_j) < \dot{Q}_h^{k=2}(T_j)$.

4.2.4.3 Heat pump must operate continuously at maximum (k=2) compressor speed at temperature T_j, $BL(T_j) \geq \dot{Q}_h^{k=2}(T_j)$.

4.2.5 Heat pumps having a heat comfort controller.

4.2.5.1 Heat pump having a heat comfort controller: Additional steps for calculating the HSPF of a heat pump having a single-speed compressor that was tested with a fixed-speed indoor fan installed, a constant-air-volume-rate indoor fan installed, or with no indoor fan installed.

4.2.5.2 Heat pump having a heat comfort controller: Additional steps for calculating the HSPF of a heat pump having a single-speed compressor and a variable-speed, variable-air-volume-rate indoor fan.

4.2.5.3 Heat pumps having a heat comfort controller: Additional steps for calculating the HSPF of a heat pump having a two-capacity compressor.

4.2.5.4 Heat pumps having a heat comfort controller: Additional steps for calculating the HSPF of a heat pump having a variable-speed compressor. [Reserved]

4.3 Calculations of the Actual and Representative Regional Annual Performance Factors for Heat Pumps.

4.3.1 Calculation of actual regional annual performance factors (APF_A) for a particular location and for each standardized design heating requirement.

4.3.2 Calculation of representative regional annual performance factors (APF_R) for each generalized climatic region and for each standardized design heating requirement.

4.4 Rounding of SEER, HSPF, and APF for reporting purposes.

1. Definitions

1.1 Annual performance factor means the total heating and cooling done by a heat pump in a particular region in one year divided by the total electric energy used in one year. Paragraph (m)(3)(iii) of §430.23 of the Code of Federal Regulations states the calculation requirements for this rating descriptor.

1.2 ARI means Air-Conditioning and Refrigeration Institute.

1.3 ARI Standard 210/240–2003 means the test standard ''Unitary Air-Conditioning and Air-Source Heat Pump Equipment'' published in 2003 by ARI.

1.4 ASHRAE means the American Society of Heating, Refrigerating and Air-Conditioning Engineers, Inc.

1.5 ASHRAE Standard 23–93 means the test standard ''Methods of Testing for Rating Positive Displacement Refrigerant Compressors and Condensing Units'' published in 1993 by ASHRAE.

1.6 ASHRAE Standard 37–88 means the test standard ''Methods of Testing for Rating Unitary Air-Conditioning and Heat Pump Equipment'' published in 1988 by ASHRAE.

1.7 ASHRAE Standard 41.1–86 (RA 01) means the test standard ''Standard Method for Temperature Measurement'' published in 1986 and reaffirmed in 2001 by ASHRAE.

1.8 ASHRAE Standard 41.2–87 (RA 92) means the test standard ''Standard Methods for Laboratory Airflow Measurement'' published in 1987 and reaffirmed in 1992 by ASHRAE.

1.9 ASHRAE Standard 41.6–94 (RA 01) means the test standard ''Method for Measurement of Moist Air Properties'' published in 1994 and reaffirmed in 2001 by ASHRAE.

1.10 ASHRAE Standard 41.9–00 means the test standard ''Calorimeter Test Methods for Mass Flow Measurements of Volatile Refrigerants'' published in 2000 by ASHRAE.

1.11 ASHRAE Standard 51–99/AMCA Standard 210–1999 means the test standard ''Laboratory Methods of Testing Fans for Aerodynamic Performance Rating'' published in 1999 by ASHRAE and the Air Movement and Control Association International, Inc.

1.12 ASHRAE Standard 116–95 means the test standard ''Methods of Testing for Rating for Seasonal Efficiency of Unitary Air Conditioners and Heat Pumps'' published in 1995 by ASHRAE.

1.13 CFR means Code of Federal Regulations.

1.14 Constant-air-volume-rate indoor fan means a fan that varies its operating speed to provide a fixed air-volume-rate from a ducted system.

1.15 Continuously recorded, when referring to a dry bulb measurement, means that the specified temperature must be sampled at regular intervals that are equal to or less than the maximum intervals specified in section 4.3 part ''a'' of ASHRAE Standard 41.1–86 (RA 01). If such dry bulb temperatures are used only for test room control, it means that one samples at regular intervals equal to or less than the maximum intervals specified in section 4.3 part ''b'' of the same ASHRAE Standard. Regarding wet bulb temperature, dew point temperature, or relative humidity measurements, continuously recorded means that the measurements must be made at regular intervals that are equal to or less than 1 minute.

1.16 Cooling load factor (CLF) means the ratio having as its numerator the total cooling delivered during a cyclic operating interval consisting of one ON period and one OFF period. The denominator is the total cooling that would be delivered, given the same ambient conditions, had the unit operated continuously at its steady-state space cooling capacity for the same total time (ON + OFF) interval.

1.17 Coefficient of Performance (COP) means the ratio of the average rate of space heating delivered to the average rate of electrical energy consumed by the heat pump. These rate quantities must be determined from a single test or, if derived via interpolation, must be tied to a single set of operating conditions. COP is a dimensionless quantity. When determined for a ducted unit tested without an indoor fan installed, COP must include the section 3.7, 3.8, and 3.9.1 default values for the heat output and power input of a fan motor.

1.18 Cyclic Test means a test where the unit's compressor is cycled on and off for specific time intervals. A cyclic test provides half the information needed to calculate a degradation coefficient.

1.19 Damper box means a short section of duct having an air damper that meets the performance requirements of section 2.5.7.

1.20 Degradation coefficient (C_D) means a parameter used in calculating the part load factor. The degradation coefficient for cooling is denoted by C_D^c. The degradation coefficient for heating is denoted by C_D^h.

1.21 Demand-defrost control system means a system that defrosts the heat pump outdoor coil only when measuring a predetermined degradation of performance. The heat pump's controls monitor one or more parameters that always vary with the amount of frost accumulated on the outdoor coil (*e.g.*, coil to air differential temperature, coil differential air pressure, outdoor fan power or current, optical sensors, etc.) at least once for every ten minutes of compressor ON-time when space heating. One acceptable alternative to the criterion given in the prior sentence is a feedback system that measures the length of the defrost period and adjusts defrost frequency accordingly.[1] In all cases, when the frost parameter(s) reaches a predetermined value, the system initiates a defrost. In a demand-defrost control system, defrosts are terminated based on monitoring a parameter(s) that indicates that frost has been eliminated from the coil.

A demand-defrost control system, which otherwise meets the above requirements, may allow time-initiated defrosts if, and only if, such defrosts occur after 6 hours of compressor operating time.

1.22 Design heating requirement (DHR) predicts the space heating load of a residence when subjected to outdoor design conditions. Estimates for the minimum and maximum DHR are provided for six generalized U.S. climatic regions in section 4.2.

1.23 Dry-coil tests are cooling mode tests where the wet-bulb temperature of the air supplied to the indoor coil is maintained low enough that no condensate forms on this coil.

1.24 Ducted system means an air conditioner or heat pump that is designed to be permanently installed equipment and delivers conditioned air to the indoor space through a duct(s). The air conditioner or heat pump may be either a split system or a single-packaged unit.

1.25 Energy efficiency ratio (EER) means the ratio of the average rate of space cooling delivered to the average rate of electrical energy consumed by the air conditioner or heat

[1] Systems that vary defrost intervals according to outdoor dry-bulb temperature are not demand defrost systems.

pump. These rate quantities must be determined from a single test or, if derived via interpolation, must be tied to a single set of operating conditions. EER is expressed in units of

$$\frac{\text{Btu/h}}{\text{W}}.$$

When determined for a ducted unit tested without an indoor fan installed, EER must include the section 3.3 and 3.5.1 default values for the heat output and power input of a fan motor.

1.26 Heating load factor (HLF) means the ratio having as its numerator the total heating delivered during a cyclic operating interval consisting of one ON period and one OFF period. The denominator is the total heating that would be delivered, given the same ambient conditions, if the unit operated continuously at its steady-state space heating capacity for the same total time (ON plus OFF) interval.

1.27 Heating seasonal performance factor (HSPF) means the total space heating required during the space heating season, expressed in Btu's, divided by the total electrical energy consumed by the heat pump system during the same season, expressed in watt-hours. The HSPF used to evaluate compliance with the Energy Conservation Standards (see 10 CFR 430.32(c), Subpart C) is based on Region IV, the minimum standardized design heating requirement, and the sampling plan stated in 10 CFR 430.24(m), Subpart B.

1.28 Heat pump having a heat comfort controller means equipment that regulates the operation of the electric resistance elements to assure that the air temperature leaving the indoor section does not fall below a specified temperature. This specified temperature is usually field adjustable. Heat pumps that actively regulate the rate of electric resistance heating when operating below the balance point (as the result of a second stage call from the thermostat) but do not operate to maintain a minimum delivery temperature are not considered as having a heat comfort controller.

1.29 Mini-split air conditioners and heat pumps means systems that have a single outdoor section and one or more indoor sections. The indoor sections cycle on and off in unison in response to a single indoor thermostat.

1.30 Multiple-split air conditioners and heat pumps means systems that have two or more indoor sections. The indoor sections operate independently and can be used to condition multiple zones in response to multiple indoor thermostats.

1.31 Non-ducted system means an air conditioner or heat pump that is designed to be permanently installed equipment and directly heats or cools air within the conditioned space using one or more indoor coils that are mounted on room walls and/or ceilings. The unit may be of a modular design that allows for combining multiple outdoor coils and compressors to create one overall system. Non-ducted systems covered by this test procedure are all split systems.

1.32 Part-load factor (PLF) means the ratio of the cyclic energy efficiency ratio (coefficient of performance) to the steady-state energy efficiency ratio (coefficient of performance). Evaluate both energy efficiency ratios (coefficients of performance) based on operation at the same ambient conditions.

1.33 Seasonal energy efficiency ratio (SEER) means the total heat removed from the conditioned space during the annual cooling season, expressed in Btu's, divided by the total electrical energy consumed by the air conditioner or heat pump during the same season, expressed in watt-hours. The SEER calculation in section 4.1 of this Appendix and the sampling plan stated in 10 CFR Subpart B, 430.24(m) are used to evaluate compliance with the Energy Conservation Standards. (See 10 CFR 430.32(c), Subpart C.)

1.34 Single-packaged unit means any central air conditioner or heat pump that has all major assemblies enclosed in one cabinet.

1.35 Small-duct, high-velocity system means a system that contains a blower and indoor coil combination that is designed for, and produces, at least 1.2 inches (of water) of external static pressure when operated at the certified air volume rate of 220–350 cfm per rated ton of cooling. When applied in the field, small-duct products use high-velocity room outlets (*i.e.*, generally greater than 1000 fpm) having less than 6.0 square inches of free area.

1.36 Split system means any air conditioner or heat pump that has one or more of the major assemblies separated from the others.

1.37 Standard Air means dry air at 70 °F and 14.696 psia. Under these conditions, dry air has a mass density of 0.075 lb/ft^3.

1.38 Steady-state test means a test where the test conditions are regulated to remain as constant as possible while the unit operates continuously in the same mode.

1.39 Temperature bin means the 5 °F increments that are used to partition the outdoor dry-bulb temperature ranges of the cooling ($\geq$ 65 °F) and heating (< 65 °F) seasons.

1.40 Test condition tolerance means the maximum permissible difference between the average value of the measured test parameter and the specified test condition.

1.41 Test operating tolerance means the maximum permissible range that a measurement may vary over the specified test interval. The difference between the maximum and minimum sampled values must be less than or equal to the specified test operating tolerance.

1.42 Time adaptive defrost control system is a demand-defrost control system (see definition 1.21) that measures the length of the prior defrost period(s) and uses that information to automatically determine when to initiate the next defrost cycle.

1.43 Time-temperature defrost control systems initiate or evaluate initiating a defrost cycle only when a predetermined cumulative compressor ON-time is obtained. This predetermined ON-time is generally a fixed value (*e.g.*, 30, 45, 90 minutes) although it may vary based on the measured outdoor dry-bulb temperature. The ON-time counter accumulates if controller measurements (*e.g.*, outdoor temperature, evaporator temperature) indicate that frost formation conditions are present, and it is reset/remains at zero at all other times. In one application of the control scheme, a defrost is initiated whenever the counter time equals the predetermined ON-time. The counter is reset when the defrost cycle is completed.

In a second application of the control scheme, one or more parameters are measured (*e.g.*, air and/or refrigerant temperatures) at the predetermined, cumulative, compressor ON-time. A defrost is initiated only if the measured parameter(s) falls within a predetermined range. The ON-time counter is reset regardless of whether a defrost is initiated. If systems of this second type use cumulative ON-time intervals of 10 minutes or less, then the heat pump may qualify as having a demand defrost control system (see definition 1.21).

1.44 Triple-split system means an air conditioner or heat pump that is composed of three separate components: An outdoor fan coil section, an indoor fan coil section, and an indoor compressor section.

1.45 Two-capacity (or two-stage) compressor means an air conditioner or heat pump that has one of the following:

(1) A two-speed compressor,

(2) Two compressors where only one compressor ever operates at a time,

(3) Two compressors where one compressor (Compressor #1) operates at low loads and both compressors (Compressors #1 and #2) operate at high loads but Compressor #2 never operates alone, or

(4) A compressor that is capable of cylinder or scroll unloading.

For such systems, low capacity means:

(1) Operating at low compressor speed,

(2) Operating the lower capacity compressor,

(3) Operating Compressor #1, or

(4) Operating with the compressor unloaded (*e.g.*, operating one piston of a two-piston reciprocating compressor, using a fixed fractional volume of the full scroll, etc.).

For such systems, high capacity means:

(1) Operating at high compressor speed,

(2) Operating the higher capacity compressor,

(3) Operating Compressors #1 and #2, or

(4) Operating with the compressor loaded (*e.g.*, operating both pistons of a two-piston reciprocating compressor, using the full volume of the scroll).

1.46 Two-capacity, northern heat pump means a heat pump that has a factory or field-selectable lock-out feature to prevent space cooling at high-capacity. Two-capacity heat pumps having this feature will typically have two sets of ratings, one with the feature disabled and one with the feature enabled. The indoor coil model number should reflect whether the ratings pertain to the lockout enabled option via the inclusion of an extra identifier, such as ''+LO.'' When testing as a two-capacity, northern heat pump, the lockout feature must remain enabled for all tests.

1.47 Wet-coil test means a test conducted at test conditions that typically cause water vapor to condense on the test unit evaporator coil.

2. Testing Conditions

This test procedure covers split-type and single-packaged ducted units and split-type non-ducted units. Except for units having a variable-speed compressor, ducted units tested without an indoor fan installed are covered.

a. Only a subset of the sections listed in this test procedure apply when testing and rating a particular unit. Tables 1–A through 1–C show which sections of the test procedure apply to each type of equipment. In each table, look at all four of the Roman numeral categories to see what test sections apply to the equipment being tested.

1. The first category, Rows I–1 through I–4 of the Tables, pertains to the compressor and indoor fan features of the equipment. After identifying the correct ''I'' row, find the table cells in the same row that list the type of equipment being tested: Air conditioner (AC), heat pump (HP), or heating-only heat pump (HH). Use the test section(s) listed above each noted table cell for testing and rating the unit.

2. The second category, Rows II–1 and II–2, pertains to the presence or absence of ducts. Row II–1 shows the test procedure sections that apply to ducted systems, and Row II–2 shows those that apply to non-ducted systems.

3. The third category is for special features that may be present in the equipment. When testing units that have one or more of the three (special) equipment features described by the Table legend for Category III, use Row III to find test sections that apply.

4. The fourth category is for the secondary test method to be used. If the secondary method for determining the unit's cooling and/or heating capacity is known, use Row

IV to find the appropriate test sections. Otherwise, include all of the test sections referenced by Row IV cell entries—*i.e.*, sections 2.10 to 2.10.3 and 3.11 to 3.11.3—among those sections consulted for testing and rating information.

b. Obtain a complete listing of all pertinent test sections by recording those sections identified from the four categories above.

c. The user should note that, for many sections, only part of a section applies to the unit being tested. In a few cases, the entire section may not apply. For example, sections 3.4 to 3.5.3 (which describe optional dry coil tests), are not relevant if the allowed default value for the cooling mode cyclic degradation coefficient is used rather than determining it by testing.

Example for Using Tables 1–A to 1–C

Equipment Description: A ducted air conditioner having a single-speed compressor, a fixed-speed indoor fan, and a multi-speed outdoor fan.

Secondary Test Method: Refrigerant Enthalpy Method

Step 1. Determine which of four listed Row ''I'' options applies ==> Row I–2

Table 1–A: ''AC'' in Row I–2 is found in the columns for sections 1.1 to 1.47, 2.1 to 2.2, 2.2.4 to 2.2.4.1, 2.2.5, 2.3 to 2.3.1, 2.4 to 2.4.1, 2.5, 2.5.2 to 2.10, and 2.11 to 2.13.

Table 1–B: ''AC'' is listed in Row I–2 for sections 3 to 3.1.4, 3.1.5 to 3.1.8, 3.2.1, 3.3 to 3.5, 3.5.3, 3.11 and 3.12.

Table 1–C: ''AC'' is listed in Row I–2 for sections 4.1.1 and 4.4.

Step 2. Equipment is ducted ==> Row II–1

Table 1–A: ''AC'' is listed in Row II–1 for sections 2.4.2 and 2.5.1 to 2.5.1.2.

Table 1–B: ''AC'' is listed in Row II–1 for sections 3.1.4.1 to 3.1.4.1.1 and 3.5.1.

Table 1–C: no ''AC'' listings in Row II–1.

Step 3. Equipment Special Features include multi-speed outdoor fan ==> Row III, M

Table 1–A: ''M'' is listed in Row III for section 2.2.2

Tables 1–B and 1–C: no ''M'' listings in Row III.

Step 4. Secondary Test Method is Refrigerant Enthalpy Method ==> Row IV, R

Table 1–A: ''R'' is listed in Row IV for section 2.10.3

Table 1–B: ''R'' is listed in Row IV for section 3.11.3

Table 1–C: no ''R'' listings in Row IV.

Step 5. Cumulative listing of applicable test procedure sections 1.1 to 1.47, 2.1 to 2.2, 2.2.2, 2.2.4 to 2.4.1, 2.2.5, 2.3 to 2.3.1, 2.4 to 2.4.1, 2.4.2, 2.5, 2.5.1 to 2.5.1.2, 2.5.2 to 2.10, 2.10.3, 2.11 to 2.13, 3. to 3.1.4, 3.1.4.1 to 3.1.4.1.1, 3.1.5 to 3.1.8, 3.2.1, 3.3 to 3.5, 3.5.1, 3.5.3, 3.11, 3.11.3, 3.12, 4.1.1, and 4.4.

Table 1A. Selection of Test Procedure Sections: Section 1 (Definitions) and Section 2 (Testing Conditions)

Key Equipment Features and Secondary Test Method / Sections From the Test Procedure	1.1 to 1.47	2.1 to 2.2	2.2.1	2.2.2	2.2.3	2.2.4 to 2.2.4.1	2.2.4.2	2.2.5	2.3 to 2.3.1	2.3.2	2.4 to 2.4.1	2.4.2	2.5	2.5.1 to 2.5.1.2	2.5.2 to 2.10	2.10.1	2.10.2	2.10.3	2.11 to 2.13
I-1. Single-speed Compressor; Variable-Speed Variable Air Volume Indoor Fan	AC HP HH	AC HP HH	HP HH			AC HP	HP HH	AC HP HH	AC HP	HP HH	AC HP HH		AC HP HH		AC HP HH				AC HP HH
I-2. Single-speed Compressor Except as Covered by "I-1"	AC HP HH	AC HP HH	HP HH			AC HP	HP HH	AC HP HH	AC HP	HP HH	AC HP HH		AC HP HH		AC HP HH				AC HP HH
I-3. Two-capacity Compressor	AC HP HH	AC HP HH	HP HH			AC HP	HP HH	AC HP HH	AC HP	HP HH	AC HP HH		AC HP HH		AC HP HH				AC HP HH
I-4. Variable-speed Compressor	AC HP HH	AC HP HH	HP HH			AC HP	HP HH	AC HP HH	AC HP	HP HH	AC HP HH		AC HP HH		AC HP HH				AC HP HH
II-1. Ducted												AC HP HH		AC HP HH					
II-2. Non-Ducted																			
III. Special Features				M	G														
IV. Secondary Test Method																O	C	R	

Legend for Table Entries:

Categories I and II: AC = applies for an Air Conditioner that meets the corresponding Column 1 "Key Equipment . . ." criterion
HP = applies for a Heat Pump that meets the corresponding Column 1 "Key Equipment . . ." criterion
HH = applies for a Heating-only Heat pump that meets the corresponding Column 1 "Key Equipment . . ." criterion

Category III: G = ganged mini-splits or multi-splits;
H = heat pump with a heat comfort controller;
M = units with a multi-speed outdoor fan.

Category IV: O = Outdoor Air Enthalpy Method; C = Compressor Calibration Method; R = Refrigerant Enthalpy Method

Table 1B. Selection of Test Procedure Sections: Section 3 (Testing Procedures)

Key Equipment Features and Secondary Test Method / Sections From the Test Procedure	3. to 3.1.4	3.1.4.1 to 3.1.4.1.1	3.1.4.1.2	3.1.4.2	3.1.4.3	3.1.4.4 to 3.1.4.4.2	3.1.4.4.3	3.1.4.4.4	3.1.4.5	3.1.4.6 to 3.1.4.7	3.1.5 to 3.1.8	3.1.9	3.2.1	3.2.2 to 3.2.2.2	3.2.3	3.2.4	3.3 to 3.5	3.5.1	3.5.2	3.5.3
I-1. Single-speed Compressor; Variable-speed, Variable Air Volume Indoor Fan	AC HP HH			AC HP					HP HH		AC HP HH	HP HH		AC HP			AC HP			AC HP
I-2. Single-speed Compressor Except as Covered by "I-1"	AC HP HH										AC HP HH	HP HH	AC HP				AC HP			AC HP
I-3. Two-capacity Compressor	AC HP HH			AC HP					HP HH		AC HP HH	HP HH			AC HP		AC HP			AC HP
I-4. Variable-speed Compressor	AC HP HH			AC HP	AC HP				HP HH	HP HH	AC HP HH	HP HH				AC HP	AC HP			AC HP
II-1. Ducted		AC HP				HP	HH											AC HP		
II-2. Non-Ducted			AC HP					HP HH											AC HP	
III. Special Features												H								
IV. Secondary Test Method																				

Legend for Table Entries:

Categories I and II: AC = applies for an Air Conditioner that meets the corresponding Column 1 "Key Equipment . . ." criterion
HP = applies for a Heat Pump that meets the corresponding Column 1 "Key Equipment . . ." criterion
HH = applies for a Heating-only Heat pump that meets the corresponding Column 1 "Key Equipment . . ." criterion

Category III: G = ganged mini-splits or multi-splits;
H = heat pump with a heat comfort controller;
M = units with a multi-speed outdoor fan.

Category IV: O = Outdoor Air Enthalpy Method; C = Compressor Calibration Method; R = Refrigerant Enthalpy Method

Table 1B. Selection of Test Procedure Sections: Section 3 (Testing Procedures) (continued)

Key Equipment Features and Secondary Test Method / Sections From the Test Procedure	3.6.1	3.6.2	3.6.3	3.6.4	3.6.5	3.7 to 3.8.1	3.9 to 3.10	3.11	3.11.1 to 3.11.1.3	3.11.2	3.11.3	3.12
I-1. Single-speed Compressor; Variable-speed, Variable Air Volume Indoor Fan		HP HH				HP HH	HP HH	AC HP HH				AC HP HH
I-2. Single-speed Compressor Except as Covered by "I-1"	HP HH					HP HH	HP HH	AC HP HH				AC HP HH
I-3. Two-capacity Compressor			HP HH			HP HH	HP HH	AC HP HH				AC HP HH
I-4. Variable-speed Compressor				HP HH		HP HH	HP HH	AC HP HH				AC HP HH
II-1. Ducted												
II-2. Non-Ducted												
III. Special Features					H							
IV. Secondary Test Method									O	C	R	

Legend for Table Entries:

Categories I and II: AC = applies for an Air Conditioner that meets the corresponding Column 1 "Key Equipment . . ." criterion
HP = applies for a Heat Pump that meets the corresponding Column 1 "Key Equipment . . ." criterion
HH = applies for a Heating-only Heat pump that meets the corresponding Column 1 "Key Equipment . . ." criterion

Category III: G = ganged mini-splits or multi-splits;
H = heat pump with a heat comfort controller;
M = units with a multi-speed outdoor fan.

Category IV: O = Outdoor Air Enthalpy Method; C = Compressor Calibration Method; R = Refrigerant Enthalpy Method

Table 1C. Selection of Test Procedure Sections: Section 4 (Calculations of Seasonal Performance Descriptors)

Key Equipment Features and Secondary Test Method / Sections From the Test Procedure	4 to 4.1	4.1.1	4.1.2 to 4.1.2.2	4.1.3 to 4.1.3.4	4.1.4 to 4.1.4.3	4.2	4.2.1	4.2.2	4.2.3 to 4.2.3.4	4.2.4 to 4.2.4.3	4.2.5 to 4.2.5.4	4.3 to 4.3.2	4.4
I-1. Single-speed Compressor; Variable-speed Variable Air Volume Indoor Fan	AC HP		AC HP			HP HH		HP HH				HP	AC HP HH
I-2. Single-speed Compressor Except as Covered by "I-1"		AC HP				HP HH	HP HH					HP	AC HP HH
I-3. Two-capacity Compressor	AC HP			AC HP		HP HH			HP HH			HP	AC HP HH
I-4. Variable-speed Compressor	AC HP				AC HP	HP HH				HP HH		HP	AC HP HH
II-1. Ducted													
II-2. Non-Ducted													
III. Special Features						H					H		
IV. Secondary Test Method													

Legend for Table Entries:

Categories I and II: AC = applies for an Air Conditioner that meets the corresponding Column 1 "Key Equipment . . ." criterion

HP = applies for a Heat Pump that meets the corresponding Column 1 "Key Equipment . . ." criterion

HH = applies for a Heating-only Heat pump that meets the corresponding Column 1 "Key Equipment . . ." criterion

Category III: G = ganged mini-splits or multi-splits;

H = heat pump with a heat comfort controller;

M = units with a multi-speed outdoor fan.

Category IV: O = Outdoor Air Enthalpy Method; C = Compressor Calibration Method; R = Refrigerant Enthalpy Method

2.1 Test room requirements. a. Test using two side-by-side rooms, an indoor test room and an outdoor test room. These rooms must comply with the requirements specified in sections 8.1.2 and 8.1.3 of ASHRAE Standard 37–88 (incorporated by reference, see §430.22).

b. Inside these test rooms, use artificial loads during cyclic tests and frost accumulation tests, if needed, to produce stabilized room air temperatures. For one room, select an electric resistance heater(s) having a heating capacity that is approximately equal to the heating capacity of the test unit's condenser. For the second room, select a heater(s) having a capacity that is close to the sensible cooling capacity of the test unit's evaporator. When applied, cycle the heater located in the same room as the test unit evaporator coil ON and OFF when the test unit cycles ON and OFF. Cycle the heater located in the same room as the test unit condensing coil ON and OFF when the test unit cycles OFF and ON.

2.2 Test unit installation requirements. a. Install the unit according to section 8.6 of ASHRAE Standard 37–88 (incorporated by reference, see §430.22). With respect to interconnecting tubing used when testing split systems, however, follow the requirements given in section 6.1.3.5 of ARI Standard 210/240–2003 (incorporated by reference, see §430.22). When testing triple-split systems (see Definition 1.44), use the tubing length specified in section 6.1.3.5 of ARI Standard 210/240–2003 (incorporated by reference, see §430.22) to connect the outdoor coil, indoor compressor section, and indoor coil while still meeting the requirement of exposing 10 feet of the tubing to outside conditions. When testing non-ducted systems having multiple indoor coils, connect each indoor fan-coil to the outdoor unit using: a. 25 feet of tubing, or b. tubing furnished by the manufacturer, whichever is longer. If they are needed to make a secondary measurement of capacity, install refrigerant pressure measuring instruments as described in section 8.6.5 of ASHRAE Standard 37–88 (incorporated by reference, see §430.22). Refer to section 2.10 of this Appendix to learn which secondary methods require refrigerant pressure measurements. At a minimum, insulate the low pressure line(s) of a split system with foam insulation having an inside diameter that matches the refrigerant tubing and a nominal thickness of ½ inch.

b. For units designed for both horizontal and vertical installation or for both up-flow and down-flow vertical installations, the manufacturer must specify the orientation used for testing. Conduct testing with the following installed:

(1) The most restrictive filter(s);

(2) Supplementary heating coils; and

(3) Other equipment specified as part of the unit, including all hardware used by a heat comfort controller if so equipped (see Definition 1.28).

c. Testing a ducted unit without having an indoor air filter installed is permissible as long as the minimum external static pressure requirement is adjusted as stated in Table 2, note 3 (see section 3.1.4). Except as noted in section 3.1.9, prevent the indoor air supplementary heating coils from operating during all tests. For coil-only indoor units that are supplied without an enclosure, create an enclosure using 1 inch fiberglass ductboard having a nominal density of 6 pounds per cubic foot. Or alternatively, use some other insulating material having a thermal resistance (''R'' value) between 4 and 6 hr·ft^{2}· °F/Btu. For units where the coil is housed within an enclosure or cabinet, no extra insulating or sealing is allowed.

2.2.1 Defrost control settings. Set heat pump defrost controls at the normal settings which most typify those encountered in generalized climatic region IV. (Refer to Figure 2 and Table 17 of section 4.2 for information on region IV.) For heat pumps that use a time-adaptive defrost control system (see Definition 1.42), the manufacturer must specify the frosting interval to be used during Frost Accumulation tests and provide the procedure for manually initiating the defrost at the specified time. To ease testing of any unit, the manufacturer should provide information and any necessary hardware to manually initiate a defrost cycle.

2.2.2 Special requirements for units having a multiple-speed outdoor fan. Configure the multiple-speed outdoor fan according to the manufacturer's specifications, and thereafter, leave it unchanged for all tests. The controls of the unit must regulate the operation of the outdoor fan during all lab tests except dry coil cooling mode tests. For dry coil cooling mode tests, the outdoor fan must operate at the same speed used during the required wet coil test conducted at the same outdoor test conditions.

2.2.3 Special requirements for multi-split air conditioners and heat pumps, and systems composed of multiple mini-split units (outdoor units located side-by-side) that would normally operate using two or more indoor thermostats. During the steady-state tests, shunt all thermostats to make all indoor fan-coil units operate simultaneously. To ease the testing burden of cyclic tests, consider creating a single control circuit that allows simultaneous cycling of all compressor systems. For these systems, the test procedure references to a single indoor fan, outdoor fan, and compressor means all indoor fans, all outdoor fans, and all compressor systems.

2.2.4 Wet-bulb temperature requirements for the air entering the indoor and outdoor coils.

2.2.4.1 Cooling mode tests. For wet-coil cooling mode tests, regulate the water vapor content of the air entering the indoor unit to the applicable wet-bulb temperature listed in Tables 3 to 6. As noted in these same tables, achieve a wet-bulb temperature during dry-coil cooling mode tests that results in no condensate forming on the indoor coil. Controlling the water vapor content of the air entering the outdoor side of the unit is not required for cooling mode tests except when testing:

(1) Units that reject condensate to the outdoor coil during wet coil tests. Tables 3–6 list the applicable wet-bulb temperatures.

(2) Single-packaged units where all or part of the indoor section is located in the outdoor test room. The average dew point temperature of the air entering the outdoor coil during wet coil tests must be within ±3.0 °F of the average dew point temperature of the air entering the indoor coil over the 30-minute data collection interval described in section 3.3. For dry coil tests on such units, it may be necessary to limit the moisture content of the air entering the outdoor side

of the unit to meet the requirements of section 3.4.

2.2.4.2 Heating mode tests. For heating mode tests, regulate the water vapor content of the air entering the outdoor unit to the applicable wet-bulb temperature listed in Tables 9 to 12. The wet-bulb temperature entering the indoor side of the heat pump must not exceed 60 °F. Additionally, if the Outdoor Air Enthalpy test method is used while testing a single-packaged heat pump where all or part of the outdoor section is located in the indoor test room, adjust the wet-bulb temperature for the air entering the indoor side to yield an indoor-side dew point temperature that is as close as reasonably possible to the dew point temperature of the outdoor-side entering air.

2.2.5 Additional refrigerant charging requirements. Charging according to the ''manufacturer's instructions,'' as stated in section 8.6 of ASHRAE Standard 37–88 (incorporated by reference, see §430.22), means the manufacturer's installation instructions that come packaged with the unit. If a unit requires charging but the installation instructions do not specify a charging procedure, then evacuate the unit and add the nameplate refrigerant charge. Where the manufacturer's installation instructions contain two sets of refrigerant charging criteria, one for field installations and one for lab testing, use the field installation criteria. For third-party testing, the test laboratory may consult with the manufacturer about the refrigerant charging procedure and make any needed corrections so long as they do not contradict the published installation instructions. The manufacturer may specify an alternative charging criteria to the third-party laboratory so long as the manufacturer thereafter revises the published installation instructions accordingly.

2.3 Indoor air volume rates. If a unit's controls allow for overspeeding the indoor fan (usually on a temporary basis), take the necessary steps to prevent overspeeding during all tests.

2.3.1 Cooling tests. a. Set indoor fan control options (*e.g.*, fan motor pin settings, fan motor speed) according to the published installation instructions that are provided with the equipment while meeting the airflow requirements that are specified in sections 3.1.4.1 to 3.1.4.3.

b. Express the Cooling Certified Air Volume Rate, the Cooling Minimum Air Volume Rate, and the Cooling Intermediate Air Volume Rate in terms of standard air.

2.3.2 Heating tests. a. If needed, set the indoor fan control options (*e.g.*, fan motor pin settings, fan motor speed) according to the published installation instructions that are provided with the equipment. Do this set-up while meeting all applicable airflow requirements specified in sections 3.1.4.4 to 3.1.4.7.

b. Express the Heating Certified Air Volume Rate, the Heating Minimum Air Volume Rate, the Heating Intermediate Air Volume Rate, and the Heating Nominal Air Volume Rate in terms of standard air.

2.4 Indoor coil inlet and outlet duct connections. Insulate and/or construct the outlet plenum described in section 2.4.1 and, if installed, the inlet plenum described in section 2.4.2 with thermal insulation having a nominal overall sistance (R-value) of at least 19 $hr \cdot ft^{2} \cdot °F/Btu$.

2.4.1 Outlet plenum for the indoor unit. Attach a plenum to the outlet of the indoor coil. (Note: for some packaged systems, the indoor coil may be located in the outdoor test room.) For non-ducted systems having multiple indoor coils, attach a plenum to each indoor coil outlet. Add a static pressure tap to each face of the (each) outlet plenum, if rectangular, or at four evenly distributed locations along the circumference of an oval or round plenum. Create a manifold that connects the four static pressure taps. Figure 1 shows two of the three options allowed for the manifold configuration; the third option is the broken-ring, four-to-one manifold configuration that is shown in Figure 7 of ASHRAE Standard 37–88 (incorporated by reference, see §430.22). See Figures 7 and 8 of ASHRAE Standard 37–88 (incorporated by reference, see §430.22) for the cross-sectional dimensions and minimum length of the (each) plenum and the locations for adding the static pressure taps for units tested with and without an indoor fan installed. For a non-ducted system having multiple indoor coils, have all outlet plenums discharge air into a single common duct. At the plane where each plenum enters the common duct, install an adjustable airflow damper and use it to equalize the static pressure in each plenum.

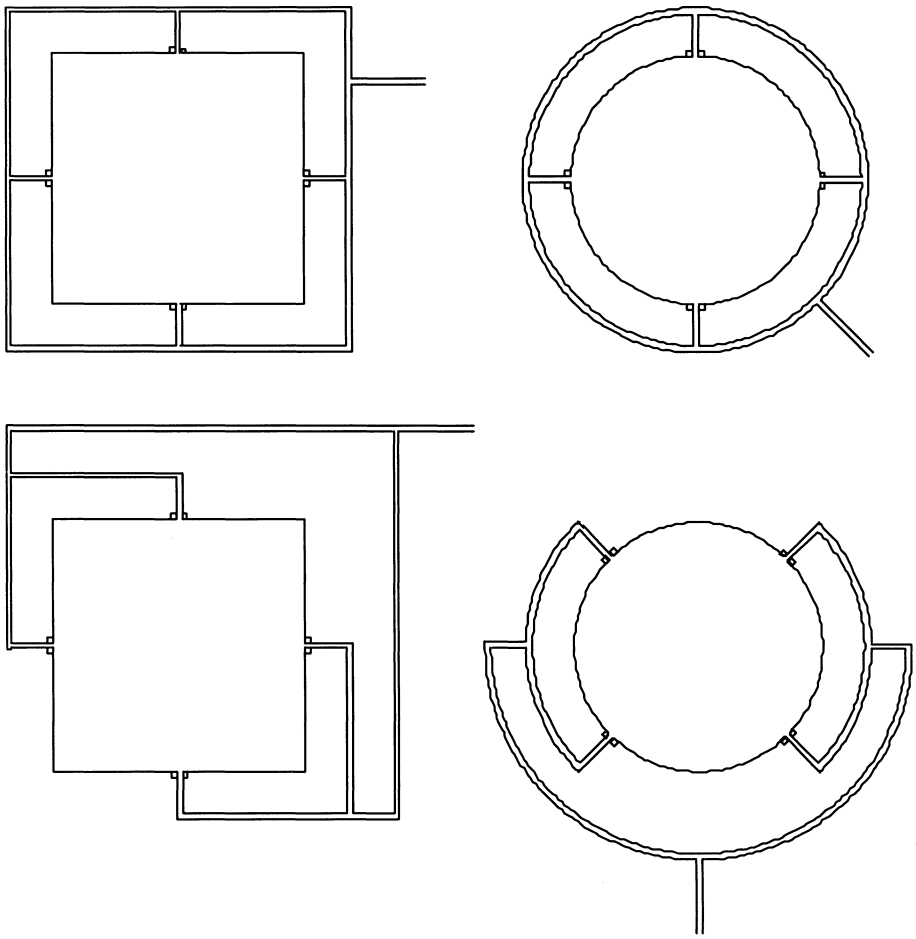

Figure 1. Configurations for manifolding the static pressure taps. The top two diagrams show the complete ring, four-to-one configuration. The lower two diagrams show the triple-T configuration.

2.4.2 Inlet plenum for the indoor unit. Install an inlet plenum when testing a coil-only indoor unit or a packaged system where the indoor coil is located in the outdoor test room. Add static pressure taps at the center of each face of this plenum, if rectangular, or at four evenly distributed locations along the circumference of an oval or round plenum. Make a manifold that connects the four static pressure taps using one of the three configurations specified in section 2.4.1. See Figure 8 of ASHRAE Standard 37–88 (incorporated by reference, see §430.22) for cross-sectional dimensions, the minimum length of the inlet plenum, and the locations of the static pressure taps. When testing a ducted unit having an indoor fan (and the indoor coil is in the indoor test room), the manufacturer has the option to test with or without an inlet plenum installed. Space limitations within the test room may dictate that the manufacturer choose the latter option. If used, construct the inlet plenum and add the four static pressure taps as shown in Figure 8 of ASHRAE Standard 37–88 (incorporated by reference, see §430.22). Manifold the four static pressure taps using one of the three configurations specified in section 2.4.1. Never use an inlet plenum when testing a non-ducted system.

2.5 Indoor coil air property measurements and air damper box applications. a. Measure the dry-bulb temperature and water vapor content of the air entering and leaving the indoor coil. If needed, use an air sampling device to divert air to a sensor(s) that measures the water vapor content of the air. See Figure 2 of ASHRAE Standard 41.1–86 (RA 01) (incorporated by reference, see §430.22) for guidance on constructing an air sampling device. The sampling device may also divert air to a remotely located sensor(s) that measures dry bulb temperature. The air sampling device and the remotely located temperature sensor(s) may be used to determine the entering air dry bulb temperature during any test. The air sampling device and the remotely located leaving air dry bulb temperature sensor(s) may be used for all tests except:

(1) Cyclic tests; and

(2) Frost accumulation tests.

b. An acceptable alternative in all cases, including the two special cases noted above, is to install a grid of dry bulb temperature sensors within the outlet and inlet ducts. Use a temperature grid to get the average dry bulb temperature at one location, leaving or entering, or when two grids are applied as a thermopile, to directly obtain the temperature difference. A grid of temperature sensors (which may also be used for determining average leaving air dry bulb temperature) is required to measure the temperature distribution within a cross-section of the leaving airstream.

c. Use an inlet and outlet air damper box when testing ducted systems if conducting one or both of the cyclic tests listed in sections 3.2 and 3.6. Otherwise, install an outlet air damper box when testing heat pumps, both ducted and non-ducted, that cycle off the indoor fan during defrost cycles if no other means is available for preventing natural or forced convection through the indoor unit when the indoor fan is off. Never use an inlet damper box when testing a non-ducted system.

2.5.1 Test set-up on the inlet side of the indoor coil: for cases where the inlet damper box is installed. a. Install the inlet side damper box as specified in section 2.5.1.1 or 2.5.1.2, whichever applies. Insulate or construct the ductwork between the point where the air damper is installed and where the connection is made to either the inlet plenum (section 2.5.1.1 units) or the indoor unit (section 2.5.1.2 units) with thermal insulation that has a nominal overall resistance (R-value) of at least 19 $hr \cdot ft^{2} \cdot {}^{\circ}F/Btu$.

b. Locate the grid of entering air dry-bulb temperature sensors, if used, at the inlet of the damper box. Locate the air sampling device, or the sensor used to measure the water vapor content of the inlet air, at a location immediately upstream of the damper box inlet.

2.5.1.1 If the section 2.4.2 inlet plenum is installed. Install the inlet damper box upstream of the inlet plenum. The cross-sectional flow area of the damper box must be equal to or greater than the flow area of the inlet plenum. If needed, use an adaptor plate or a transition duct section to connect the damper box with the inlet plenum.

2.5.1.2 If the section 2.4.2 inlet plenum is not installed. Install the damper box immediately upstream of the air inlet of the indoor unit. The cross-sectional dimensions of the damper box must be equal to or greater than the dimensions of the indoor unit inlet. If needed, use an adaptor plate or a short transition duct section to connect the damper box with the unit's air inlet. Add static pressure taps at the center of each face of the damper box, if rectangular, or at four evenly distributed locations along the circumference, if oval or round. Locate the pressure taps between the inlet damper and the inlet of the indoor unit. Make a manifold that connects the four static pressure taps.

2.5.2 Test set-up on the inlet side of the indoor unit: for cases where no inlet damper box is installed. If using the section 2.4.2 inlet plenum and a grid of dry bulb temperature sensors, mount the grid at a location upstream of the static pressure taps described in section 2.4.2, preferably at the entrance plane of the inlet plenum. If the section 2.4.2 inlet plenum is not used, but a grid of dry bulb temperature sensors is used, locate the grid approximately 6 inches upstream from the inlet of the indoor coil. Or, in the case of non-ducted units having multiple indoor coils, locate a grid approximately 6 inches upstream from the inlet of each indoor coil. Position an air sampling device, or the sensor used to measure the water vapor content of the inlet air, immediately upstream of the (each) entering air dry-bulb temperature sensor grid. If a grid of sensors is not used, position the entering air sampling device (or the sensor used to measure the water vapor content of the inlet air) as if the grid were present.

2.5.3 Indoor coil static pressure difference measurement. Section 6.4.4.1 of ASHRAE Standard 37–88 (incorporated by reference, see §430.22) describes the method for fabricating static pressure taps. Also refer to Figure 2A of ASHRAE Standard 51–99/AMCA Standard 210–99 (incorporated by reference, see §430.22). Use a differential pressure measuring instrument that is accurate to within ±0.01 inches of water and has a resolution of at least 0.01 inches of water to measure the static pressure difference between the indoor coil air inlet and outlet. Connect one side of the differential pressure instrument to the manifolded pressure taps installed in the outlet plenum. Connect the other side of the instrument to the manifolded pressure taps located in either the inlet plenum or incorporated within the air damper box. If an

inlet plenum or inlet damper box are not used, leave the inlet side of the differential pressure instrument open to the surrounding atmosphere. For non-ducted systems that are tested with multiple outlet plenums, measure the static pressure within each outlet plenum relative to the surrounding atmosphere.

2.5.4 Test set-up on the outlet side of the indoor coil. a. Install an interconnecting duct between the outlet plenum described in section 2.4.1 and the airflow measuring apparatus described below in section 2.6. The cross-sectional flow area of the interconnecting duct must be equal to or greater than the flow area of the outlet plenum or the common duct used when testing non-ducted units having multiple indoor coils. If needed, use adaptor plates or transition duct sections to allow the connections. To minimize leakage, tape joints within the interconnecting duct (and the outlet plenum). Construct or insulate the entire flow section with thermal insulation having a nominal overall resistance (R-value) of at least 19 $hr \cdot ft^2 \cdot {}^\circ F/Btu$.

b. Install a grid(s) of dry-bulb temperature sensors inside the interconnecting duct. Also, install an air sampling device, or the sensor(s) used to measure the water vapor content of the outlet air, inside the interconnecting duct. Locate the dry-bulb temperature grid(s) upstream of the air sampling device (or the in-duct sensor(s) used to measure the water vapor content of the outlet air). Air that circulates through an air sampling device and past a remote water-vapor-content sensor(s) must be returned to the interconnecting duct at a point:

(1) Downstream of the air sampling device;

(2) Upstream of the outlet air damper box, if installed; and

(3) Upstream of the section 2.6 airflow measuring apparatus.

2.5.4.1 Outlet air damper box placement and requirements. If using an outlet air damper box (see section 2.5), install it within the interconnecting duct at a location downstream of the location where air from the sampling device is reintroduced or downstream of the in-duct sensor that measures water vapor content of the outlet air. The leakage rate from the combination of the outlet plenum, the closed damper, and the duct section that connects these two components must not exceed 20 cubic feet per minute when a negative pressure of 1 inch of water column is maintained at the plenum's inlet.

2.5.4.2 Procedures to minimize temperature maldistribution. Use these procedures if necessary to correct temperature maldistributions. Install a mixing device(s) upstream of the outlet air, dry-bulb temperature grid (but downstream of the outlet plenum static pressure taps). Use a perforated screen located between the mixing device and the dry-bulb temperature grid, with a maximum open area of 40 percent. One or both items should help to meet the maximum outlet air temperature distribution specified in section 3.1.8. Mixing devices are described in sections 6.3—6.5 of ASHRAE Standard 41.1–86 (RA 01) (incorporated by reference, see §430.22) and section 5.2.2 of ASHRAE Standard 41.2–87 (RA 92) (incorporated by reference, see §430.22).

2.5.5 Dry bulb temperature measurement. a. Measure dry bulb temperatures as specified in sections 4, 5, 6.1–6.10, 9, 10, and 11 of ASHRAE Standard 41.1–86 (RA 01) (incorporated by reference, see §430.22). The transient testing requirements cited in section 4.3 of ASHRAE Standard 41.1–86 (RA 01) (incorporated by reference, see §430.22) apply if conducting a cyclic or frost accumulation test.

b. Distribute the sensors of a dry-bulb temperature grid over the entire flow area. The required minimum is 9 sensors per grid.

2.5.6 Water vapor content measurement. Determine water vapor content by measuring dry-bulb temperature combined with the air wet-bulb temperature, dew point temperature, or relative humidity. If used, construct and apply wet-bulb temperature sensors as specified in sections 4, 5, 6, 9, 10, and 11 of ASHRAE Standard 41.1–86 (RA 01) (incorporated by reference, see §430.22). As specified in ASHRAE 41.1–86 (RA 01) (incorporated by reference, see §430.22), the temperature sensor (wick removed) must be accurate to within ±0.2°F. If used, apply dew point hygrometers as specified in sections 5 and 8 of ASHRAE Standard 41.6–94 (RA 01) (incorporated by reference, see §430.22). The dew point hygrometers must be accurate to within ±0.4°F when operated at conditions that result in the evaluation of dew points above 35°F. If used, a relative humidity (RH) meter must be accurate to within ±0.7% RH. Other means to determine the psychrometric state of air may be used as long as the measurement accuracy is equivalent to or better than the accuracy achieved from using a wet-bulb temperature sensor that meets the above specifications.

2.5.7 Air damper box performance requirements. If used (see section 2.5), the air damper box(es) must be capable of being completely opened or completely closed within 10 seconds for each action.

2.6 Airflow measuring apparatus. a. Fabricate and operate an Air Flow Measuring Apparatus as specified in section 6.6 of ASHRAE Standard 116–95 (incorporated by reference, see §430.22). Refer to Figure 12 of ASHRAE Standard 51–99/AMCA Standard 210–99 (incorporated by reference, see §430.22) or Figure 14 of ASHRAE Standard 41.2–87 (RA 92) (incorporated by reference, see §430.22) for guidance on placing the static pressure taps and positioning the diffusion

baffle (settling means) relative to the chamber inlet.

b. Connect the airflow measuring apparatus to the interconnecting duct section described in section 2.5.4. See sections 6.1.1, 6.1.2, and 6.1.4, and Figures 1, 2, and 4 of ASHRAE Standard 37–88 (incorporated by reference, see §430.22), and Figures D1, D2, and D4 of ARI Standard 210/240–2003 (incorporated by reference, see §430.22) for illustrative examples of how the test apparatus may be applied within a complete laboratory set-up. Instead of following one of these examples, an alternative set-up may be used to handle the air leaving the airflow measuring apparatus and to supply properly conditioned air to the test unit's inlet. The alternative set-up, however, must not interfere with the prescribed means for measuring airflow rate, inlet and outlet air temperatures, inlet and outlet water vapor contents, and external static pressures, nor create abnormal conditions surrounding the test unit. (Note: Do not use an enclosure as described in section 6.1.3 of ASHRAE Standard 37–88 (incorporated by reference, see §430.22) when testing triple-split units.)

2.7 Electrical voltage supply. Perform all tests at the voltage specified in section 6.1.3.2 of ARI Standard 210/240–2003 (incorporated by reference, see §430.22) for ''Standard Rating Tests.'' Measure the supply voltage at the terminals on the test unit using a volt meter that provides a reading that is accurate to within ±1.0 percent of the measured quantity.

2.8 Electrical power and energy measurements. a. Use an integrating power (watt-hour) measuring system to determine the electrical energy or average electrical power supplied to all components of the air conditioner or heat pump (including auxiliary components such as controls, transformers, crankcase heater, integral condensate pump on non-ducted indoor units, etc.). The watt-hour measuring system must give readings that are accurate to within ±0.5 percent. For cyclic tests, this accuracy is required during both the ON and OFF cycles. Use either two different scales on the same watt-hour meter or two separate watt-hour meters. Activate the scale or meter having the lower power rating within 15 seconds after beginning an OFF cycle. Activate the scale or meter having the higher power rating active within 15 seconds prior to beginning an ON cycle. For ducted units tested with a fan installed, the ON cycle lasts from compressor ON to indoor fan OFF. For ducted units tested without an indoor fan installed, the ON cycle lasts from compressor ON to compressor OFF. For non-ducted units, the ON cycle lasts from indoor fan ON to indoor fan OFF. When testing air conditioners and heat pumps having a variable-speed compressor, avoid using an induction watt/watt-hour meter.

b. When performing section 3.5 and/or 3.8 cyclic tests on non-ducted units, provide instrumentation to determine the average electrical power consumption of the indoor fan motor to within ±1.0 percent. If required according to sections 3.3, 3.4, 3.7, 3.9.1, and/or 3.10, this same instrumentation requirement applies when testing air conditioners and heat pumps having a variable-speed constant-air-volume-rate indoor fan or a variable-speed, variable-air-volume-rate indoor fan.

2.9 Time measurements. Make elapsed time measurements using an instrument that yields readings accurate to within ±0.2 percent.

2.10 Test apparatus for the secondary space conditioning capacity measurement. For all tests, use the Indoor Air Enthalpy Method to measure the unit's capacity. This method uses the test set-up specified in sections 2.4 to 2.6. In addition, for all steady-state tests, conduct a second, independent measurement of capacity as described in section 3.1.1. For split systems, use one of the following secondary measurement methods: Outdoor Air Enthalpy Method, Compressor Calibration Method, or Refrigerant Enthalpy Method. For single packaged units, use either the Outdoor Air Enthalpy Method or the Compressor Calibration Method as the secondary measurement.

2.10.1 Outdoor Air Enthalpy Method. a. To make a secondary measurement of indoor space conditioning capacity using the Outdoor Air Enthalpy Method, do the following:

(1) Measure the electrical power consumption of the test unit;

(2) Measure the air-side capacity at the outdoor coil; and

(3) Apply a heat balance on the refrigerant cycle.

b. The test apparatus required for the Outdoor Air Enthalpy Method is a subset of the apparatus used for the Indoor Air Enthalpy Method. Required apparatus includes the following:

(1) An outlet plenum containing static pressure taps (sections 2.4, 2.4.1, and 2.5.3),

(2) An airflow measuring apparatus (section 2.6),

(3) A duct section that connects these two components and itself contains the instrumentation for measuring the dry-bulb temperature and water vapor content of the air leaving the outdoor coil (sections 2.5.4, 2.5.5, and 2.5.6), and

(4) On the inlet side, a sampling device and optional temperature grid (sections 2.5 and 2.5.2).

c. During the preliminary tests described in sections 3.11.1 and 3.11.1.1, measure the evaporator and condenser temperatures or pressures. On both the outdoor coil and the indoor coil, solder a thermocouple onto a return bend located at or near the midpoint of each coil or at points not affected by vapor

superheat or liquid subcooling. Alternatively, if the test unit is not sensitive to the refrigerant charge, connect pressure gages to the access valves or to ports created from tapping into the suction and discharge lines. Use this alternative approach when testing a unit charged with a zeotropic refrigerant having a temperature glide in excess of 1°F at the specified test conditions.

2.10.2 Compressor Calibration Method. Measure refrigerant pressures and temperatures to determine the evaporator superheat and the enthalpy of the refrigerant that enters and exits the indoor coil. Determine refrigerant flow rate or, when the superheat of the refrigerant leaving the evaporator is less than 5 °F, total capacity from separate calibration tests conducted under identical operating conditions. When using this method, install instrumentation, measure refrigerant properties, and adjust the refrigerant charge according to section 7.4.2 of ASHRAE Standard 37–88 (incorporated by reference, see §430.22). Use refrigerant temperature and pressure measuring instruments that meet the specifications given in sections 5.1.1 and 5.2 of ASHRAE Standard 37–88 (incorporated by reference, see §430.22).

2.10.3 Refrigerant Enthalpy Method. For this method, calculate space conditioning capacity by determining the refrigerant enthalpy change for the indoor coil and directly measuring the refrigerant flow rate. Use section 7.6.2 of ASHRAE Standard 37–88 (incorporated by reference, see §430.22) for the requirements for this method, including the additional instrumentation requirements, and information on placing the flow meter and a sight glass. Use refrigerant temperature, pressure, and flow measuring instruments that meet the specifications given in sections 5.1.1, 5.2, and 5.5.1 of ASHRAE Standard 37–88 (incorporated by reference, see §430.22).

2.11 Measurement of test room ambient conditions. a. If using a test set-up where air is ducted directly from the conditioning apparatus to the indoor coil inlet (see Figure 2, Loop Air-Enthalpy Test Method Arrangement, of ASHRAE Standard 37–88 (incorporated by reference, see §430.22)), add instrumentation to permit measurement of the indoor test room dry-bulb temperature.

b. If the Outdoor Air Enthalpy Method is not used, add instrumentation to measure the dry-bulb temperature and the water vapor content of the air entering the outdoor coil. If an air sampling device is used, construct and apply the device as per section 6 of ASHRAE Standard 41.1–86 (RA 01) (incorporated by reference, see §430.22). Take steps (*e.g.*, add or re-position a lab circulating fan), as needed, to minimize the magnitude of the temperature distribution non-uniformity. Position any fan in the outdoor test room while trying to keep air velocities in the vicinity of the test unit below 500 feet per minute.

c. Measure dry bulb temperatures as specified in sections 4, 5, 6.1–6.10, 9, 10, and 11 of ASHRAE Standard 41.1–86 (RA 01) (incorporated by reference, see §430.22). Measure water vapor content as stated above in section 2.5.6.

2.12 Measurement of indoor fan speed. When required, measure fan speed using a revolution counter, tachometer, or stroboscope that gives readings accurate to within ±1.0 percent.

2.13 Measurement of barometric pressure. Determine the average barometric pressure during each test. Use an instrument that meets the requirements specified in section 5.2 of ASHRAE Standard 37–88 (incorporated by reference, see §430.22).

3. Testing Procedures

3.1 General Requirements. If, during the testing process, an equipment set-up adjustment is made that would alter the performance of the unit when conducting an already completed test, then repeat all tests affected by the adjustment. For cyclic tests, instead of maintaining an air volume rate, for each airflow nozzle, maintain the static pressure difference or velocity pressure during an ON period at the same pressure difference or velocity pressure as measured during the steady-state test conducted at the same test conditions.

3.1.1 Primary and secondary test methods. For all tests, use the Indoor Air Enthalpy Method test apparatus to determine the unit's space conditioning capacity. The procedure and data collected, however, differ slightly depending upon whether the test is a steady-state test, a cyclic test, or a frost accumulation test. The following sections described these differences. For all steady-state tests (*i.e.*, the A, A_2, A_1, B, B_2, B_1, C, C_1, EV, F_1, G_1, $H0_1$, H_1, $H1_2$, $H1_1$, HI_N, H_3, $H3_2$, and $H3_1$ Tests), in addition, use one of the acceptable secondary methods specified in section 2.10 to determine indoor space conditioning capacity. Calculate this secondary check of capacity according to section 3.11. The two capacity measurements must agree to within 6 percent to constitute a valid test. For this capacity comparison, use the Indoor Air Enthalpy Method capacity that is calculated in section 7.3 of ASHRAE Standard 37–88 (incorporated by reference, see §430.22) (and do not make the after-test fan heat adjustments described in sections 3.3, 3.4, 3.7, and 3.10 of this Appendix). However, include the appropriate section 3.3 to 3.5 and 3.7 to 3.10 fan heat adjustments within the Indoor Air Enthalpy Method capacities used for the section 4 seasonal calculations.

3.1.2 Manufacturer-provided equipment overrides. Where needed, the manufacturer

must provide a means for overriding the controls of the test unit so that the compressor(s) operates at the specified speed or capacity and the indoor fan operates at the specified speed or delivers the specified air volume rate.

3.1.3 Airflow through the outdoor coil. For all tests, meet the requirements given in section 6.1.3.4 of ARI Standard 210/240–2003 (incorporated by reference, see § 430.22) when obtaining the airflow through the outdoor coil.

3.1.4 Airflow through the indoor coil.

3.1.4.1 Cooling Certified Air Volume Rate.

3.1.4.1.1 Cooling Certified Air Volume Rate for Ducted Units. The manufacturer must specify the Cooling Certified Air Volume Rate. Use this value as long as the following two requirements are satisfied. First, when conducting the A or A_2 Test (exclusively), the measured air volume rate, when divided by the measured indoor air-side total cooling capacity, must not exceed 37.5 cubic feet per minute of standard air (scfm) per 1000 Btu/h. If this ratio is exceeded, reduce the air volume rate until this ratio is equaled. Use this reduced air volume rate for all tests that call for using the Cooling Certified Air Volume Rate. The second requirement is as follows:

a. For ducted units that are tested with a fixed-speed, multi-speed, or variable-speed variable-air-volume-rate indoor fan installed. For the A or A_2 Test (exclusively), the measured external static pressure must be equal to or greater than the applicable minimum external static pressure cited in Table 2. If the Table 2 minimum is not equaled or exceeded, incrementally change the set-up of the indoor fan (*e.g.*, fan motor pin settings, fan motor speed) until the Table 2 requirement is met while maintaining the same air volume rate. If the indoor fan set-up changes cannot provide the minimum external static, then reduce the air volume rate until the correct Table 2 minimum is equaled. For the last scenario, use the reduced air volume rate for all tests that require the Cooling Certified Air Volume Rate.

b. For ducted units that are tested with a constant-air-volume-rate indoor fan installed. For all tests that specify the Cooling Certified Air Volume Rate, obtain an external static pressure as close to (but not less than) the applicable Table 2 value that does not cause instability or an automatic shutdown of the indoor blower.

c. For ducted units that are tested without an indoor fan installed. For the A or A_2 Test, (exclusively), the pressure drop across the indoor coil assembly must not exceed 0.30 inches of water. If this pressure drop is exceeded, reduce the air volume rate until the measured pressure drop equals the specified maximum. Use this reduced air volume rate for all tests that require the Cooling Certified Air Volume Rate.

TABLE 2—MINIMUM EXTERNAL STATIC PRESSURE FOR DUCTED SYSTEMS TESTED WITH AN INDOOR FAN INSTALLED

Rated Cooling [1] or Heating [2] Capacity (Btu/h)	Minimum External Resistance [3] (Inches of Water)
Up Thru 28,800	0.10
29,000 to 42,500	0.15
43,000 and Above	0.20

[1] For air conditioners and heat pumps, the value cited by the manufacturer in published literature for the unit's capacity when operated at the A or A_2 Test conditions.

[2] For heating-only heat pumps, the value the manufacturer cites in published literature for the unit's capacity when operated at the H1 or $H1_2$ Test conditions.

[3] For ducted units tested without an air filter installed, increase the applicable tabular value by 0.08 inches of water.

3.1.4.1.2 Cooling Certified Air Volume Rate for Non-ducted Units. For non-ducted units, the Cooling Certified Air Volume Rate is the air volume rate that results during each test when the unit is operated at an external static pressure of zero inches of water.

3.1.4.2 Cooling Minimum Air Volume Rate. a. For ducted units that regulate the speed (as opposed to the cfm) of the indoor fan,

$$\text{Cooling Minimum Air Vol. Rate} = \text{Cooling Certified Air Vol. Rate} \times \frac{\text{Cooling Minimum Fan Speed}}{\text{A}_2\text{ Test Fan Speed}},$$

where ''Cooling Minimum Fan Speed'' corresponds to the fan speed used when operating at low compressor capacity (two-capacity system), the fan speed used when operating at the minimum compressor speed (variable-speed system), or the lowest fan speed used when cooling (single-speed compressor and a variable-speed variable-air-volume-rate indoor fan). For such systems, obtain the Cooling Minimum Air Volume Rate regardless of the external static pressure.

b. For ducted units that regulate the air volume rate provided by the indoor fan, the manufacturer must specify the Cooling Minimum Air Volume Rate. For such systems, conduct all tests that specify the Cooling Minimum Air Volume Rate—(*i.e.*, the A_1, B_1, C_1, F_1, and G_1 Tests)—at an external static pressure that does not cause instability or an automatic shutdown of the indoor blower while being as close to, but not less than,

$$A_1,\ B_1,\ C_1,\ F_1,\ \&\ G_1\ \text{Test}\ \Delta P_{st} = \Delta P_{st,A_2} \times \left[\frac{\text{Cooling Minimum Air Volume Rate}}{\text{Cooling Certified Air Volume Rate}}\right]^2,$$

where $\Delta P_{st,A_2}$ is the applicable Table 2 minimum external static pressure that was targeted during the A_2 (and B_2) Test.

c. For ducted two-capacity units that are tested without an indoor fan installed, the Cooling Minimum Air Volume Rate is the higher of (1) the rate specified by the manufacturer or (2) 75 percent of the Cooling Certified Air Volume Rate. During the laboratory tests on a coil-only (fanless) unit, obtain this Cooling Minimum Air Volume Rate regardless of the pressure drop across the indoor coil assembly.

d. For non-ducted units, the Cooling Minimum Air Volume Rate is the air volume rate that results during each test when the unit operates at an external static pressure of zero inches of water and at the indoor fan setting used at low compressor capacity (two-capacity system) or minimum compressor speed (variable-speed system). For units having a single-speed compressor and a variable-speed variable-air-volume-rate indoor fan, use the lowest fan setting allowed for cooling.

3.1.4.3 Cooling Intermediate Air Volume Rate. a. For ducted units that regulate the speed of the indoor fan,

$$\text{Cooling Intermediate Air Volume Rate} = \text{Cooling Certified Air Volume Rate} \times \frac{E_v\ \text{Test Fan Speed}}{A_2\ \text{Test Fan Speed}}.$$

For such units, obtain the Cooling Intermediate Air Volume Rate regardless of the external static pressure.

b. For ducted units that regulate the air volume rate provided by the indoor fan, the manufacturer must specify the Cooling Intermediate Air Volume Rate. For such systems, conduct the E_V Test at an external static pressure that does not cause instability or an automatic shutdown of the indoor blower while being as close to, but not less than,

$$E_v\ \text{Test}\ \Delta P_{st} = \Delta P_{st,A_2} \times \left[\frac{\text{Cooling Intermediate Air Volume Rate}}{\text{Cooling Certified Air Volume Rate}}\right]^2,$$

where $\Delta P_{st,A_2}$ is the applicable Table 2 minimum external static pressure that was targeted during the A_2 (and B_2) Test.

c. For non-ducted units, the Cooling Intermediate Air Volume Rate is the air volume rate that results when the unit operates at an external static pressure of zero inches of water and at the fan speed selected by the controls of the unit for the E_V Test conditions.

3.1.4.4 Heating Certified Air Volume Rate.

3.1.4.4.1 Ducted heat pumps where the Heating and Cooling Certified Air Volume Rates are the same. a. Use the Cooling Certified Air Volume Rate as the Heating Certified Air Volume Rate for:

1. Ducted heat pumps that operate at the same indoor fan speed during both the A (or A_2) and the H1 (or $H1_2$) Tests;

2. Ducted heat pumps that regulate fan speed to deliver the same constant air volume rate during both the A (or A_2) and the H1 (or $H1_2$) Tests; and

3. Ducted heat pumps that are tested without an indoor fan installed (except two-capacity northern heat pumps that are tested only at low capacity cooling—see 3.1.4.4.2).

b. For heat pumps that meet the above criteria ''1'' and ''3,'' no minimum requirements apply to the measured external or internal, respectively, static pressure. For heat pumps that meet the above criterion ''2,'' test at an external static pressure that does not cause instability or an automatic shutdown of the indoor blower while being as close to, but not less than, the same Table 2 minimum external static pressure as was specified for the A (or A_2) cooling mode test.

3.1.4.4.2 Ducted heat pumps where the Heating and Cooling Certified Air Volume Rates are different due to indoor fan operation. a. For ducted heat pumps that regulate the speed (as opposed to the cfm) of the indoor fan,

$$\text{Heating Certified Air Volume Rate} = \text{Cooling Certified Air Volume Rate} \times \frac{\text{H1 or H1}_2\text{ Test Fan Speed}}{\text{A or A}_2\text{ Test Fan Speed}}.$$

For such heat pumps, obtain the Heating Certified Air Volume Rate without regard to the external static pressure.

b. For ducted heat pumps that regulate the air volume rate delivered by the indoor fan, the manufacturer must specify the Heating Certified Air Volume Rate. For such heat pumps, conduct all tests that specify the Heating Certified Air Volume Rate at an external static pressure that does not cause instability or an automatic shutdown of the indoor blower while being as close to, but not less than,

$$\text{Heating Certified } \Delta P_{st} = \text{Cooling Certified } \Delta P_{st} \times \left[\frac{\text{Heating Certified Air Volume Rate}}{\text{Cooling Certified Air Volume Rate}}\right]^2$$

where the Cooling Certified ΔP_{st} is the applicable Table 2 minimum external static pressure that was specified for the A or A_2 Test.

c. When testing ducted, two-capacity northern heat pumps (see Definition 1.46), use the appropriate approach of the above two cases for units that are tested with an indoor fan installed. For coil-only (fanless) northern heat pumps, the Heating Certified Air Volume Rate is the lesser of the rate specified by the manufacturer or 133 percent of the Cooling Certified Air Volume Rate. For this latter case, obtain the Heating Certified Air Volume Rate regardless of the pressure drop across the indoor coil assembly.

3.1.4.4.3 Ducted heating-only heat pumps. The manufacturer must specify the Heating Certified Air Volume Rate. Use this value when the following two requirements are satisfied. First, when conducting the H1 or $H1_2$ Test (exclusively), the measured air volume rate, when divided by the measured indoor air-side total heating capacity, must not exceed 37.5 cubic feet per minute of standard air (scfm) per 1000 Btu/h. If this ratio is exceeded, reduce the air volume rate until this ratio is equaled. Use this reduced air volume rate for all tests of heating-only heat pumps that call for the Heating Certified Air Volume Rate. The second requirement is as follows:

a. For heating-only heat pumps that are tested with a fixed-speed, multi-speed, or variable-speed variable-air-volume-rate indoor fan installed. For the H1 or $H1_2$ Test (exclusively), the measured external static pressure must be equal to or greater than the Table 2 minimum external static pressure that applies given the heating-only heat pump's rated heating capacity. If the Table 2 minimum is not equaled or exceeded, incrementally change the set-up of the indoor fan until the Table 2 requirement is met while maintaining the same air volume rate. If the indoor fan set-up changes cannot provide the necessary external static pressure, then reduce the air volume rate until the correct Table 2 minimum is equaled. For the last scenario, use the reduced air volume rate for all tests that require the Heating Certified Air Volume Rate.

b. For ducted heating-only heat pumps having a constant-air-volume-rate indoor fan. For all tests that specify the Heating

Certified Air Volume Rate, obtain an external static pressure that does not cause instability or an automatic shutdown of the indoor blower while being as close to, but not less than, the applicable Table 2 minimum.

c. For ducted heating-only heat pumps that are tested without an indoor fan installed. For the H1 or $H1_2$ Test, (exclusively), the pressure drop across the indoor coil assembly must not exceed 0.30 inches of water. If this pressure drop is exceeded, reduce the air volume rate until the measured pressure drop equals the specified maximum. Use this reduced air volume rate for all tests that require the Heating Certified Air Volume Rate.

3.1.4.4.4 Non-ducted heat pumps, including non-ducted heating-only heat pumps. For non-ducted heat pumps, the Heating Certified Air Volume Rate is the air volume rate that results during each test when the unit operates at an external static pressure of zero inches of water.

3.1.4.5 Heating Minimum Air Volume Rate. a. For ducted heat pumps that regulate the speed (as opposed to the cfm) of the indoor fan,

$$\text{Heating Minimum Air Volume Rate} = \text{Heating Certified Air Volume Rate} \times \frac{\text{Heating Minimum Fan Speed}}{\text{H1}_2\text{ Test Fan Speed}}$$

where ''Heating Minimum Fan Speed'' corresponds to the fan speed used when operating at low compressor capacity (two-capacity system), the lowest fan speed used at any time when operating at the minimum compressor speed (variable-speed system), or the lowest fan speed used when heating (single-speed compressor and a variable-speed variable-air-volume-rate indoor fan). For such heat pumps, obtain the Heating Minimum Air Volume Rate without regard to the external static pressure.

b. For ducted heat pumps that regulate the air volume rate delivered by the indoor fan, the manufacturer must specify the Heating Minimum Air Volume Rate. For such heat pumps, conduct all tests that specify the Heating Minimum Air Volume Rate—(*i.e.*, the $H0_1$, $H1_1$, $H2_1$, and $H3_1$ Tests)—at an external static pressure that does not cause instability or an automatic shutdown of the indoor blower while being as close to, but not less than,

$$\text{H0}_1,\ \text{H1}_1,\ \text{H2}_1,\ \text{H3}_1,\ \text{Test}\ \Delta P_{st} = \Delta P_{st,H1_2} \times \left[\frac{\text{Htg Minimum Air Vol. Rate}}{\text{Htg Certified Air Vol. Rate}}\right]^2,$$

where $\Delta P_{st,H1_2}$

is the minimum external static pressure that was targeted during the $H1_2$ Test.

c. For ducted two-capacity northern heat pumps that are tested with an indoor fan installed, use the appropriate approach of the above two cases.

d. For ducted two-capacity heat pumps that are tested without an indoor fan installed, use the Cooling Minimum Air Volume Rate as the Heating Minimum Air Volume Rate. For ducted two-capacity northern heat pumps that are tested without an indoor fan installed, use the Cooling Certified Air Volume Rate as the Heating Minimum Air Volume Rate. For ducted two-capacity heating-only heat pumps that are tested without an indoor fan installed, the Heating Minimum Air Volume Rate is the higher of the rate specified by the manufacturer or 75 percent of the Heating Certified Air Volume Rate. During the laboratory tests on a coil-only (fanless) unit, obtain the Heating Minimum Air Volume Rate without regard to the pressure drop across the indoor coil assembly.

e. For non-ducted heat pumps, the Heating Minimum Air Volume Rate is the air volume rate that results during each test when the unit operates at an external static pressure of zero inches of water and at the indoor fan setting used at low compressor capacity (two-capacity system) or minimum compressor speed (variable-speed system). For units having a single-speed compressor and a variable-speed, variable-air-volume-rate indoor fan, use the lowest fan setting allowed for heating.

3.1.4.6 Heating Intermediate Air Volume Rate. a. For ducted heat pumps that regulate the speed of the indoor fan,

$$\text{Heating Intermediate Air Volume Rate} = \text{Heating Certified Air Volume Rate} \times \frac{H2_V \text{ Test Fan Speed}}{H1_2 \text{ Test Fan Speed}}.$$

For such heat pumps, obtain the Heating Intermediate Air Volume Rate without regard to the external static pressure.

b. For ducted heat pumps that regulate the air volume rate delivered by the indoor fan, the manufacturer must specify the Heating Intermediate Air Volume Rate. For such heat pumps, conduct the $H2_V$ Test at an external static pressure that does not cause instability or an automatic shutdown of the indoor blower while being as close to, but not less than,

$$H2_V \text{ Test } \Delta P_{st} = \Delta P_{st,H1_2} \times \left[\frac{\text{Heating Intermediate Air Volume Rate}}{\text{Heating Certified Air Volume Rate}}\right]^2,$$

where $\Delta P_{st,H1_2}$

is the minimum external static pressure that was specified for the $H1_2$ Test.

c. For non-ducted heat pumps, the Heating Intermediate Air Volume Rate is the air volume rate that results when the heat pump operates at an external static pressure of zero inches of water and at the fan speed selected by the controls of the unit for the $H2_V$ Test conditions.

3.1.4.7 Heating Nominal Air Volume Rate. Except for the noted changes, determine the Heating Nominal Air Volume Rate using the approach described in section 3.1.4.6. Required changes include substituting ''$H1_N$ Test'' for $H2_V$ Test'' within the first section 3.1.4.6 equation, substituting ''$H1_N$ Test ΔP_{st}'' for ''$H2_V$ Test ΔP_{st}'' in the second section 3.1.4.6 equation, substituting ''$H1_N$ Test'' for each ''$H2_V$ Test'', and substituting ''Heating Nominal Air Volume Rate'' for each ''Heating Intermediate Air Volume Rate.''

$$\text{Heating Nominal Air Volume Rate} = \text{Heating Certified Air Volume Rate} \times \frac{H1_N \text{ Test Fan Speed}}{H1_2 \text{ Test Fan Speed}}.$$

$$H1_N \text{ Test } \Delta P_{st} = \Delta P_{st,H1_2} \times \left[\frac{\text{Heating Nominal Air Volume Rate}}{\text{Heating Certified Air Volume Rate}}\right]^2.$$

3.1.5 Indoor test room requirement when the air surrounding the indoor unit is not supplied from the same source as the air entering the indoor unit. If using a test set-up where air is ducted directly from the air reconditioning apparatus to the indoor coil inlet (see Figure 2, Loop Air-Enthalpy Test Method Arrangement, of ASHRAE Standard 37–88) (incorporated by reference, see §430.22), maintain the dry bulb temperature within the test room within ±5.0 °F of the applicable sections 3.2 and 3.6 dry bulb temperature test condition for the air entering the indoor unit.

3.1.6 Air volume rate calculations. For all steady-state tests and for frost accumulation ($H2$, $H2_1$, $H2_2$, $H2_V$) tests, calculate the air volume rate through the indoor coil as specified in sections 7.8.3.1 and 7.8.3.2 of ASHRAE Standard 37–88 (incorporated by reference, see §430.22). When using the Outdoor Air Enthalpy Method, follow sections 7.8.3.1 and 7.8.3.2 to calculate the air volume rate through the outdoor coil. To express air volume rates in terms of standard air, use:

$$\overline{\dot{V}}_s = \frac{\overline{\dot{V}}_{mx}}{0.075\,\frac{lbm_{da}}{ft^3} \cdot v_n' \cdot \left[1 + W_n\right]} = \frac{\overline{\dot{V}}_{mx}}{0.075\,\frac{lbm_{da}}{ft^3} \cdot v_n} \qquad (3\text{-}1)$$

where,

$\overline{V}_s$ = air volume rate of standard (dry) air, $(ft^3/min)_{da}$

$\overline{V}_{mx}$ = air volume rate of the air-water vapor mixture, $(ft^3/min)_{mx}$

v_n' = specific volume of air-water vapor mixture at the nozzle, ft^3 per lbm of the air-water vapor mixture

W_n = humidity ratio at the nozzle, lbm of water vapor per lbm of dry air

0.075 = the density associated with standard (dry) air, (lbm/ft^3)

v_n = specific volume of the dry air portion of the mixture evaluated at the dry-bulb temperature, vapor content, and barometric pressure existing at the nozzle, ft^3 per lbm of dry air.

3.1.7 Test sequence. When testing a ducted unit (except if a heating-only heat pump), conduct the A or A_2 Test first to establish the Cooling Certified Air Volume Rate. For ducted heat pumps where the Heating and Cooling Certified Air Volume Rates are different, make the first heating mode test one that requires the Heating Certified Air Volume Rate. For ducted heating-only heat pumps, conduct the H1 or $H1_2$ Test first to establish the Heating Certified Air Volume Rate. When conducting an optional cyclic test, always conduct it immediately after the steady-state test that requires the same test conditions. For variable-speed systems, the first test using the Cooling Minimum Air Volume Rate should precede the E_V Test if one expects to adjust the indoor fan control options when preparing for the first Minimum Air Volume Rate test. Under the same circumstances, the first test using the Heating Minimum Air Volume Rate should precede the $H2_V$ Test. The test laboratory makes all other decisions on the test sequence.

3.1.8 Requirement for the air temperature distribution leaving the indoor coil. For at least the first cooling mode test and the first heating mode test, monitor the temperature distribution of the air leaving the indoor coil using the grid of individual sensors described in sections 2.5 and 2.5.4. For the 30-minute data collection interval used to determine capacity, the maximum spread among the outlet dry bulb temperatures from any data sampling must not exceed 1.5 °F. Install the mixing devices described in section 2.5.4.2 to minimize the temperature spread.

3.1.9 Control of auxiliary resistive heating elements. Except as noted, disable heat pump resistance elements used for heating indoor air at all times, including during defrost cycles and if they are normally regulated by a heat comfort controller. For heat pumps equipped with a heat comfort controller, enable the heat pump resistance elements only during the below-described, short test. For single-speed heat pumps covered under section 3.6.1, the short test follows the H1 or, if conducted, the H1C Test. For two-capacity heat pumps and heat pumps covered under section 3.6.2, the short test follows the $H1_2$ Test. Set the heat comfort controller to provide the maximum supply air temperature. With the heat pump operating and while maintaining the Heating Certified Air Volume Rate, measure the temperature of the air leaving the indoor-side beginning 5 minutes after activating the heat comfort controller. Sample the outlet dry-bulb temperature at regular intervals that span 5 minutes or less. Collect data for 10 minutes, obtaining at least 3 samples. Calculate the average outlet temperature over the 10-minute interval, T_{CC}.

3.2 Cooling mode tests for different types of air conditioners and heat pumps.

3.2.1 Tests for a unit having a single-speed compressor that is tested with a fixed-speed indoor fan installed, with a constant-air-volume-rate indoor fan installed, or with no indoor fan installed. Conduct two steady-state wet coil tests, the A and B Tests. Use the two optional dry-coil tests, the steady-state C Test and the cyclic D Test, to determine the cooling mode cyclic degradation coefficient, C_D^c. If the two optional tests are not conducted, assign C_D^c the default value of 0.25. Table 3 specifies test conditions for these four tests.

TABLE 3—COOLING MODE TEST CONDITIONS FOR UNITS HAVING A SINGLE-SPEED COMPRESSOR AND A FIXED-SPEED INDOOR FAN, A CONSTANT AIR VOLUME RATE INDOOR FAN, OR NO INDOOR FAN

Test description	Air entering indoor unit temperature (°F)		Air entering outdoor unit temperature (°F)		Cooling air volume rate
	Dry bulb	Wet bulb	Dry bulb	Wet bulb	
A Test—required (steady, wet coil).	80	67	95	[1] 75	Cooling certified [2]
B Test—required (steady, wet coil).	80	67	82	[1] 65	Cooling certified [2]
C Test—optional (steady, dry coil).	80	([3])	82	.....	Cooling certified [2]
D Test—optional (cyclic, dry coil).	80	([3])	82	.....	([4])

[1] The specified test condition only applies if the unit rejects condensate to the outdoor coil.
[2] Defined in section 3.1.4.1.

[3] The entering air must have a low enough moisture content so no condensate forms on the indoor coil. (It is recommended that an indoor wet-bulb temperature of 57 °F or less be used.)
[4] Maintain the airflow nozzles static pressure difference or velocity pressure during the ON period at the same pressure difference or velocity pressure as measured during the C Test.

3.2.2 Tests for a unit having a single-speed compressor and a variable-speed variable-air-volume-rate indoor fan installed.

3.2.2.1 Indoor fan capacity modulation that correlates with the outdoor dry bulb temperature. Conduct four steady-state wet coil tests: The A_2, A_1 , B_2, and B_1 Tests. Use the two optional dry-coil tests, the steady-state C_1 Test and the cyclic D_1 Test, to determine the cooling mode cyclic degradation coefficient, $C_D{}^c$. If the two optional tests are not conducted, assign $C_D{}^c$ the default value of 0.25. Table 4 specifies test conditions for these six tests.

3.2.2.2 Indoor fan capacity modulation based on adjusting the sensible to total (S/T) cooling capacity ratio. The testing requirements are the same as specified in section 3.2.1 and Table 3. Use a Cooling Certified Air Volume Rate that represents a normal residential installation. If performed, conduct the steady-state C Test and the cyclic D Test with the unit operating in the same S/T capacity control mode as used for the B Test.

TABLE 4—COOLING MODE TEST CONDITIONS FOR UNITS HAVING A SINGLE-SPEED COMPRESSOR AND A VARIABLE AIR VOLUME RATE INDOOR FAN THAT CORRELATES WITH THE OUTDOOR DRY BULB TEMPERATURE (SEC. 3.2.2.1)

Test description	Air entering indoor unit temperature (°F)		Air entering outdoor unit temperature (°F)		Cooling air volume rate
	Dry bulb	Wet bulb	Dry bulb	Wet bulb	
A_2 Test—required (steady, wet coil).	80	67	95	[1] 75	Cooling certified [2]
A_1 Test—required (steady, wet coil).	80	67	95	[1] 75	Cooling minimum [3]
B_2 Test—required (steady, wet coil).	80	67	82	[1] 65	Cooling certified [2]
B_1 Test—required (steady, wet coil).	80	67	82	[1] 65	Cooling minimum [3]
C_1 Test [4]—optional (steady, dry coil).	80	([4])	82	.....	Cooling minimum [3]
D_1 Test [4]—optional (cyclic, dry coil).	80	([4])	82	([5])	

[1] The specified test condition only applies if the unit rejects condensate to the outdoor coil.
[2] Defined in section 3.1.4.1.
[3] Defined in section 3.1.4.2.
[4] The entering air must have a low enough moisture content so no condensate forms on the indoor coil. (It is recommended that an indoor wet-bulb temperature of 57 °F or less be used.)
[5] Maintain the airflow nozzles static pressure difference or velocity pressure during the ON period at the same pressure difference or velocity pressure as measured during the C_1 Test.

3.2.3 Tests for a unit having a two-capacity compressor. (See Definition 1.45.) a. Conduct four steady-state wet coil tests: The A_2, A_1, B_2, and B_1 Tests. Use the two optional dry-coil tests, the steady-state C_1 Test and the cyclic D_1 Test, to determine the cooling mode cyclic degradation coefficient, $C_D{}^c$. If the two optional tests are not conducted, assign $C_D{}^c$ the default value of 0.25. Table 5 specifies test conditions for these six tests.

b. For units having a variable speed indoor fan that is modulated to adjust the sensible to total (S/T) cooling capacity ratio, use Cooling Certified and Cooling Minimum Air Volume Rates that represent a normal residential installation. Additionally, if conducting the optional dry-coil tests, operate the unit in the same S/T capacity control mode as used for the B_1 Test.

c. Test two-capacity, northern heat pumps (see Definition 1.46) in the same way as a single speed heat pump with the unit operating exclusively at low compressor capacity (see section 3.2.1 and Table 3).

d. If a two-capacity air conditioner or heat pump locks out low capacity operation at outdoor temperatures that are less than 95 °F, conduct the A_1 Test using the outdoor temperature conditions listed for the F_1 Test in Table 6 rather than using the outdoor temperature conditions listed in Table 5 for the A_1 Test.

TABLE 5—COOLING MODE TEST CONDITIONS FOR UNITS HAVING A TWO-CAPACITY COMPRESSOR

Test description	Air entering indoor unit temperature (°F)		Air entering outdoor unit temperature (°F)		Compressor capacity	Cooling air volume rate
	Dry bulb	Wet bulb	Dry bulb	Wet bulb		
A_2 Test—required (steady, wet coil).	80	67	95	[1] 75	High	Cooling Certified [2]
A_1 Test—required (steady, wet coil).	80	67	95	[1] 75	Low	Cooling Minimum [3]
B_2 Test—required (steady, wet coil).	80	67	82	[1] 65	High	Cooling Certified [2]
B_1 Test—required (steady, wet coil).	80	67	82	[1] 65	Low	Cooling Minimum [3]
C_1 Test [4]—optional (steady, dry coil).	80	([4])	82	.....	Low	Cooling Minimum [3]
D_1 Test [4]—optional (cyclic, dry coil).	80	([4])	82	.....	Low	([5])

[1] The specified test condition only applies if the unit rejects condensate to the outdoor coil.
[2] Defined in section 3.1.4.1.
[3] Defined in section 3.1.4.2.
[4] The entering air must have a low enough moisture content so no condensate forms on the indoor coil. (It is recommended that an indoor wet-bulb temperature of 57 °F or less be used.)
[5] Maintain the airflow nozzles static pressure difference or velocity pressure during the ON period at the same pressure difference or velocity pressure as measured during the C_1 Test.

3.2.4 Tests for a unit having a variable-speed compressor. a. Conduct five steady-state wet coil tests: The A_2, E_V, B_2, B_1, and F_1 Tests. Use the two optional dry-coil tests, the steady-state G_1 Test and the cyclic I_1 Test, to determine the cooling mode cyclic degradation coefficient, $C_D{}^c$. If the two optional tests are not conducted, assign $C_D{}^c$ the default value of 0.25. Table 6 specifies test conditions for these seven tests. Determine the intermediate compressor speed cited in Table 6 using:

$$\text{Intermediate speed} = \text{Minimum speed} + \frac{\text{Maximum speed} - \text{Minimum speed}}{3}$$

where a tolerance of plus 5 percent or the next higher inverter frequency step from that calculated is allowed.

b. For units that modulate the indoor fan speed to adjust the sensible to total (S/T) cooling capacity ratio, use Cooling Certified, Cooling Intermediate, and Cooling Minimum Air Volume Rates that represent a normal residential installation. Additionally, if conducting the optional dry-coil tests, operate the unit in the same S/T capacity control mode as used for the F_1 Test.

TABLE 6—COOLING MODE TEST CONDITIONS FOR UNITS HAVING A VARIABLE-SPEED COMPRESSOR

Test description	Air entering indoor unit Temperature (°F)		Air entering outdoor unit Temperature (°F)		Compressor speed	Cooling air volume rate
	Dry bulb	Wet bulb	Dry bulb	Wet bulb		
A_2 Test—required (steady, wet coil).	80	67	95	[1] 75	Maximum	Cooling Certified [2]
B_2 Test—required (steady, wet coil).	80	67	82	[1] 65	Maximum	Cooling Certified [2]
E_V Test—required (steady, wet coil).	80	67	87	[1] 69	Intermediate	Cooling Intermediate [3]
B_1 Test—required (steady, wet coil).	80	67	82	[1] 65	Minimum	Cooling Minimum [4]
F_1 Test—required (steady, wet coil).	80	67	67	[1] 53.5	Minimum	Cooling Minimum [4]
G_1 Test [5]—optional (steady, dry coil).	80	([5])	67	.....	Minimum	Cooling Minimum [4]

TABLE 6—COOLING MODE TEST CONDITIONS FOR UNITS HAVING A VARIABLE-SPEED COMPRESSOR—Continued

Test description	Air entering indoor unit Temperature (°F)		Air entering outdoor unit Temperature (°F)		Compressor speed	Cooling air volume rate
	Dry bulb	Wet bulb	Dry bulb	Wet bulb		
I_1 Test[5]—optional (cyclic, dry coil).	80	([5])	67	.....	Minimum	([6])

[1] The specified test condition only applies if the unit rejects condensate to the outdoor coil.
[2] Defined in section 3.1.4.1.
[3] Defined in section 3.1.4.3.
[4] Defined in section 3.1.4.2.
[5] The entering air must have a low enough moisture content so no condensate forms on the indoor coil. (It is recommended that an indoor wet-bulb temperature of 57 °F or less be used.)
[6] Maintain the airflow nozzles static pressure difference or velocity pressure during the ON period at the same pressure difference or velocity pressure as measured during the G_1 Test.

3.3 Test procedures for steady-state wet coil cooling mode tests (the A, A_2, A_1, B, B_2, B_1, E_V, and F_1 Tests). a. For the pretest interval, operate the test room reconditioning apparatus and the unit to be tested until maintaining equilibrium conditions for at least 30 minutes at the specified section 3.2 test conditions. Use the exhaust fan of the airflow measuring apparatus and, if installed, the indoor fan of the test unit to obtain and then maintain the indoor air volume rate and/or external static pressure specified for the particular test. Continuously record (see Definition 1.15):

(1) The dry-bulb temperature of the air entering the indoor coil,

(2) The water vapor content of the air entering the indoor coil,

(3) The dry-bulb temperature of the air entering the outdoor coil, and

(4) For the section 2.2.4 cases where its control is required, the water vapor content of the air entering the outdoor coil.

Refer to section 3.11 for additional requirements that depend on the selected secondary test method.

b. After satisfying the pretest equilibrium requirements, make the measurements specified in Table 5 of ASHRAE Standard 37–88 (incorporated by reference, see §430.22) for the Indoor Air Enthalpy method and the user-selected secondary method. Except for external static pressure, make the Table 5 measurements at equal intervals that span 10 minutes or less. Measure external static pressure every 5 minutes or less. Continue data sampling until reaching a 30-minute period (*e.g.*, four consecutive 10-minute samples) where the test tolerances specified in Table 7 are satisfied. For those continuously recorded parameters, use the entire data set from the 30-minute interval to evaluate Table 7 compliance. Determine the average electrical power consumption of the air conditioner or heat pump over the same 30-minute interval.

c. Calculate indoor-side total cooling capacity as specified in section 7.3.3.1 of ASHRAE Standard 37–88 (incorporated by reference, see §430.22). Do not adjust the parameters used in calculating capacity for the permitted variations in test conditions. Evaluate air enthalpies based on the measured barometric pressure. Assign the average total space cooling capacity and electrical power consumption over the 30-minute data collection interval to the variables $\dot{Q}_c^k(T)$ and $\dot{E}_c^k(T)$, respectively. For these two variables, replace the ''T'' with the nominal outdoor temperature at which the test was conducted. The superscript k is used only when testing multi-capacity units. Use the superscript k=2 to denote a test with the unit operating at high capacity or maximum speed, k=1 to denote low capacity or minimum speed, and k=v to denote the intermediate speed.

d. For units tested without an indoor fan installed, decrease $\dot{Q}_c^k(T)$ by

$$\frac{1250\ \text{Btu/h}}{1000\ \text{scfm}} \cdot \overline{\dot{V}}_s,$$

and increase $\dot{E}_c^k(T)$ by,

$$\frac{365\ \text{W}}{1000\ \text{scfm}} \cdot \overline{\dot{V}}_s,$$

where $\overline{\dot{V}}_s$ is the average measured indoor air volume rate expressed in units of cubic feet per minute of standard air (scfm).

TABLE 7—TEST OPERATING AND TEST CONDITION TOLERANCES FOR SECTION 3.3 STEADY-STATE WET COIL COOLING MODE TESTS AND SECTION 3.4 DRY COIL COOLING MODE TESTS

	Test operating tolerance [1]	Test condition tolerance [2]
Indoor dry-bulb, °F		
Entering temperature	2.0	0.5
Leaving temperature	2.0	
Indoor wet-bulb, °F		
Entering temperature	1.0	[3] 0.3
Leaving temperature	[3] 1.0	
Outdoor dry-bulb, °F		
Entering temperature	2.0	0.5
Leaving temperature	[4] 2.0	
Outdoor wet-bulb, °F		
Entering temperature	1.0	[5] 0.3
Leaving temperature	[4] 1.0	
External resistance to airflow, inches of water	0.05	[6] 0.02
Electrical voltage, % of rdg.	2.0	1.5
Nozzle pressure drop, % of rdg.	2.0	

[1] See Definition 1.41.
[2] See Definition 1.40.
[3] Only applies during wet coil tests; does not apply during steady-state, dry coil cooling mode tests.
[4] Only applies when using the Outdoor Air Enthalpy Method.
[5] Only applies during wet coil cooling mode tests where the unit rejects condensate to the outdoor coil.
[6] Only applies when testing non-ducted units.

d. For air conditioners and heat pumps having a constant-air-volume-rate indoor fan, the five additional steps listed below are required if the average of the measured external static pressures exceeds the applicable sections 3.1.4 minimum (or target) external static pressure (ΔP_{min}) by 0.03 inches of water or more.

1. Measure the average power consumption of the indoor fan motor ($\dot{E}_{fan,1}$) and record the corresponding external static pressure (ΔP_1) during or immediately following the 30-minute interval used for determining capacity.

2. After completing the 30-minute interval and while maintaining the same test conditions, adjust the exhaust fan of the airflow measuring apparatus until the external static pressure increases to approximately $\Delta P_1 + (\Delta P_1 - \Delta P_{min})$.

3. After re-establishing steady readings of the fan motor power and external static pressure, determine average values for the indoor fan power ($\dot{E}_{fan,2}$) and the external static pressure (ΔP_2) by making measurements over a 5-minute interval.

4. Approximate the average power consumption of the indoor fan motor at ΔP_{min} using linear extrapolation:

$$\dot{E}_{fan,min} = \frac{\dot{E}_{fan,2} - \dot{E}_{fan,1}}{\Delta P_2 - \Delta P_1}\left(\Delta P_{min} - \Delta P_1\right) + \dot{E}_{fan,1}\,.$$

5. Increase the total space cooling capacity, $\dot{Q}_c^k(T)$, by the quantity ($\dot{E}_{fan,1} - \dot{E}_{fan,min}$), when expressed on a Btu/h basis. Decrease the total electrical power, $\dot{E}_c^k(T)$, by the same fan power difference, now expressed in watts.

3.4 Test procedures for the optional steady-state dry coil cooling mode tests (the C, C_1, and G_1 Tests). a. Except for the modifications noted in this section, conduct the steady-state dry coil cooling mode tests as specified in section 3.3 for wet coil tests. Prior to recording data during the steady-state dry coil test, operate the unit at least one hour after achieving dry coil conditions. Drain the drain pan and plug the drain opening. Thereafter, the drain pan should remain completely dry.

b. Denote the resulting total space cooling capacity and electrical power derived from the test as $\dot{Q}_{ss,dry}$ and $\dot{E}_{ss,dry}(T)$. In preparing for the section 3.5 cyclic test, record the average indoor-side air volume rate, $\bar{V}$, specific heat of the air, $C_{p,a}$ (expressed on dry air basis), specific volume of the air at the nozzles, v'_n, humidity ratio at the nozzles, W_n, and either pressure difference or velocity pressure for the flow nozzles. For units having a variable-speed indoor fan (that provides either a constant or variable air volume rate) that will or may be tested during the cyclic dry coil cooling mode test with

the indoor fan turned off (see section 3.5), include the electrical power used by the indoor fan motor among the recorded parameters from the 30-minute test.

3.5 Test procedures for the optional cyclic dry coil cooling mode tests (the D, D_1, and I_1 Tests). a. After completing the steady-state dry-coil test, remove the Outdoor Air Enthalpy method test apparatus, if connected, and begin manual OFF/ON cycling of the unit's compressor. The test set-up should otherwise be identical to the set-up used during the steady-state dry coil test. When testing heat pumps, leave the reversing valve during the compressor OFF cycles in the same position as used for the compressor ON cycles, unless automatically changed by the controls of the unit. For units having a variable-speed indoor fan, the manufacturer has the option of electing at the outset whether to conduct the cyclic test with the indoor fan enabled or disabled. Always revert to testing with the indoor fan disabled if cyclic testing with the fan enabled is unsuccessful.

b. For units having a single-speed or two-capacity compressor, cycle the compressor OFF for 24 minutes and then ON for 6 minutes ($\Delta\tau_{cyc,dry}$ = 0.5 hours). For units having a variable-speed compressor, cycle the compressor OFF for 48 minutes and then ON for 12 minutes ($\Delta\tau_{cyc,dry}$ = 1.0 hours). Repeat the OFF/ON compressor cycling pattern until the test is completed. Allow the controls of the unit to regulate cycling of the outdoor fan.

c. Sections 3.5.1 and 3.5.2 specify airflow requirements through the indoor coil of ducted and non-ducted systems, respectively. In all cases, use the exhaust fan of the airflow measuring apparatus (covered under section 2.6) along with the indoor fan of the unit, if installed and operating, to approximate a step response in the indoor coil airflow. Regulate the exhaust fan to quickly obtain and then maintain the flow nozzle static pressure difference or velocity pressure at the same value as was measured during the steady-state dry coil test. The pressure difference or velocity pressure should be within 2 percent of the value from the steady-state dry coil test within 15 seconds after airflow initiation. For units having a variable-speed indoor fan that ramps when cycling on and/or off, use the exhaust fan of the airflow measuring apparatus to impose a step response that begins at the initiation of ramp up and ends at the termination of ramp down.

d. For units having a variable-speed indoor fan, conduct the cyclic dry coil test using the pull-thru approach described below if any of the following occur when testing with the fan operating:

(1) The test unit automatically cycles off;

(2) Its blower motor reverses; or

(3) The unit operates for more than 30 seconds at an external static pressure that is 0.1 inches of water or more higher than the value measured during the prior steady-state test.

For the pull-thru approach, disable the indoor fan and use the exhaust fan of the airflow measuring apparatus to generate the specified flow nozzles static pressure difference or velocity pressure. If the exhaust fan cannot deliver the required pressure difference because of resistance created by the unpowered blower, temporarily remove the blower.

e. After completing a minimum of two complete compressor OFF/ON cycles, determine the overall cooling delivered and total electrical energy consumption during any subsequent data collection interval where the test tolerances given in Table 8 are satisfied. If available, use electric resistance heaters (see section 2.1) to minimize the variation in the inlet air temperature.

f. With regard to the Table 8 parameters, continuously record the dry-bulb temperature of the air entering the indoor and outdoor coils during periods when air flows through the respective coils. Sample the water vapor content of the indoor coil inlet air at least every 2 minutes during periods when air flows through the coil. Record external static pressure and the air volume rate indicator (either nozzle pressure difference or velocity pressure) at least every minute during the interval that air flows through the indoor coil. (These regular measurements of the airflow rate indicator are in addition to the required measurement at 15 seconds after flow initiation.) Sample the electrical voltage at least every 2 minutes beginning 30 seconds after compressor start-up. Continue until the compressor, the outdoor fan, and the indoor fan (if it is installed and operating) cycle off.

g. For ducted units, continuously record the dry-bulb temperature of the air entering (as noted above) and leaving the indoor coil. Or if using a thermopile, continuously record the difference between these two temperatures during the interval that air flows through the indoor coil. For non-ducted units, make the same dry-bulb temperature measurements beginning when the compressor cycles on and ending when indoor coil airflow ceases.

h. Integrate the electrical power over complete cycles of length $\Delta\tau_{cyc,dry}$. For ducted units tested with an indoor fan installed and operating, integrate electrical power from indoor fan OFF to indoor fan OFF. For all other ducted units and for non-ducted units, integrate electrical power from compressor OFF to compressor OFF. (Some cyclic tests will use the same data collection intervals to determine the electrical energy and the total space cooling. For other units, terminate data collection used to determine the electrical energy before terminating data collection used to determine total space cooling.)

TABLE 8—TEST OPERATING AND TEST CONDITION TOLERANCES FOR CYCLIC DRY COIL COOLING MODE TESTS

	Test Operating Tolerance [1]	Test Condition Tolerance [2]
Indoor entering dry-bulb temperature [3], °F	2.0	0.5
Indoor entering wet-bulb temperature, °F	.....	([4])
Outdoor entering dry-bulb temperature [3], °F	2.0	0.5
External resistance to airflow [3], inches of water	0.05	
Airflow nozzle pressure difference or velocity pressure [3], % of reading	2.0	[5] 2.0
Electrical voltage [6], % of rdg.	2.0	1.5

[1] See Definition 1.41.
[2] See Definition 1.40.
[3] Applies during the interval that air flows through the indoor (outdoor) coil except for the first 30 seconds after flow initiation. For units having a variable-speed indoor fan that ramps, the tolerances listed for the external resistance to airflow apply from 30 seconds after achieving full speed until ramp down begins.
[4] Shall at no time exceed a wet-bulb temperature that results in condensate forming on the indoor coil.
[5] The test condition shall be the average nozzle pressure difference or velocity pressure measured during the steady-state dry coil test.
[6] Applies during the interval when at least one of the following—the compressor, the outdoor fan, or, if applicable, the indoor fan—are operating except for the first 30 seconds after compressor start-up.

i. If the Table 8 tolerances are satisfied over the complete cycle, record the measured electrical energy consumption as $e_{cyc,dry}$ and express it in units of watt-hours. Calculate the total space cooling delivered, $q_{cyc,dry}$, in units of Btu using,

$$q_{cyc,dry} = \frac{60 \cdot \overline{V} \cdot C_{p,a} \cdot \Gamma}{\left[v'_n \cdot (1 + W_n)\right]} = \frac{60 \cdot \overline{V} \cdot C_{p,a} \cdot \Gamma}{v_n} \qquad (3.5\text{-}1)$$

where $\overline{V}$, $C_{p,a}$, v_n' (or v_n), and W_n are the values recorded during the section 3.4 dry coil steady-state test and,

$$\Gamma = \int_{\tau_1}^{\tau_2} \left[T_{al}(\tau) - T_{a2}(\tau)\right] d\tau, \ \text{hr} \cdot {}^\circ\text{F}.$$

$T_{al}(\tau)$ = dry bulb temperature of the air entering the indoor coil at time τ, °F.
$T_{a2}(\tau)$ = dry bulb temperature of the air leaving the indoor coil at time τ, °F.
τ_1 = for ducted units, the elapsed time when airflow is initiated through the indoor coil; for non-ducted units, the elapsed time when the compressor is cycled on, hr.
τ_2 = the elapsed time when indoor coil airflow ceases, hr.

3.5.1 Procedures when testing ducted systems. The automatic controls that are normally installed with the test unit must govern the OFF/ON cycling of the air moving equipment on the indoor side (exhaust fan of the airflow measuring apparatus and, if installed, the indoor fan of the test unit). For example, for ducted units tested without an indoor fan installed but rated based on using a fan time delay relay, control the indoor coil airflow according to the rated ON and/or OFF delays provided by the relay. For ducted units having a variable-speed indoor fan that has been disabled (and possibly removed), start and stop the indoor airflow at the same instances as if the fan were enabled. For all other ducted units tested without an indoor fan installed, cycle the indoor coil airflow in unison with the cycling of the compressor. Close air dampers on the inlet (section 2.5.1) and outlet side (sections 2.5 and 2.5.4) during the OFF period. Airflow through the indoor coil should stop within 3 seconds after the automatic controls of the test unit (act to) de-energize the indoor fan. For ducted units tested without an indoor fan installed (excluding the special case where a variable-speed fan is temporarily removed), increase $e_{cyc,dry}$ by the quantity,

$$\frac{365 \text{ W}}{1000 \text{ scfm}} \cdot \overline{\dot{V}}_s \cdot \left[\tau_2 - \tau_1\right], \qquad (3.5\text{-}2)$$

and decrease $q_{cyc,dry}$ by,

$$\frac{1250 \text{ Btu/h}}{1000 \text{ scfm}} \cdot \overline{\dot{V}}_s \cdot \left[\tau_2 - \tau_1\right], \qquad (3.5\text{-}3)$$

where $\overline{V}_s$ is the average indoor air volume rate from the section 3.4 dry coil steady-state test and is expressed in units of cubic feet per minute of standard air (scfm). For units having a variable-speed indoor fan that is disabled during the cyclic test, increase $e_{cyc,dry}$ and decrease $q_{cyc,dry}$ based on:

a. The product of $[\tau_2 - \tau_1]$ and the indoor fan power measured during or following the dry coil steady-state test; or,

b. The following algorithm if the indoor fan ramps its speed when cycling.

1. Measure the electrical power consumed by the variable-speed indoor fan at a minimum of three operating conditions: at the speed/air volume rate/external static pressure that was measured during the steady-state test, at operating conditions associated with the midpoint of the ramp-up interval, and at conditions associated with the midpoint of the ramp-down interval. For these measurements, the tolerances on the airflow volume or the external static pressure are the same as required for the section 3.4 steady-state test.

2. For each case, determine the fan power from measurements made over a minimum of 5 minutes.

3. Approximate the electrical energy consumption of the indoor fan if it had operated during the cyclic test using all three power measurements. Assume a linear profile during the ramp intervals. The manufacturer

must provide the durations of the ramp-up and ramp-down intervals. If a manufacturer-supplied ramp interval exceeds 45 seconds, use a 45-second ramp interval nonetheless when estimating the fan energy.

The manufacturer is allowed to choose option a, and forego the extra testing burden of option b, even if the unit ramps indoor fan speed when cycling.

3.5.2 Procedures when testing non-ducted systems. Do not use air dampers when conducting cyclic tests on non-ducted units. Until the last OFF/ON compressor cycle, airflow through the indoor coil must cycle off and on in unison with the compressor. For the last OFF/ON compressor cycle—the one used to determine $e_{cyc,dry}$ and $q_{cyc,dry}$—use the exhaust fan of the airflow measuring apparatus and the indoor fan of the test unit to have indoor airflow start 3 minutes prior to compressor cut-on and end three minutes after compressor cutoff. Subtract the electrical energy used by the indoor fan during the 3 minutes prior to compressor cut-on from the integrated electrical energy, $e_{cyc,dry}$. Add the electrical energy used by the indoor fan during the 3 minutes after compressor cutoff to the integrated cooling capacity, $q_{cyc,dry}$. For the case where the non-ducted unit uses a variable-speed indoor fan which is disabled during the cyclic test, correct $e_{cyc,dry}$ and $q_{cyc,dry}$ using the same approach as prescribed in section 3.5.1 for ducted units having a disabled variable-speed indoor fan.

3.5.3 Cooling mode cyclic degradation coefficient calculation. Use two optional dry-coil tests to determine the cooling mode cyclic degradation coefficient, C_D^c. If the two optional tests are not conducted, assign C_D^c the default value of 0.25. Evaluate C_D^c using the above results and those from the section 3.4 dry coil steady-state test.

$$C_D^c = \frac{1 - \frac{EER_{cyc,dry}}{EER_{ss,dry}}}{1 - CLF}$$

where,

$$EER_{cyc,dry} = \frac{q_{cyc,dry}}{e_{cyc,dry}},$$

the average energy efficiency ratio during the cyclic dry coil cooling mode test, Btu/W·h

$$EER_{ss,dry} = \frac{\dot{Q}_{ss,dry}}{\dot{E}_{ss,dry}},$$

the average energy efficiency ratio during the steady-state dry coil cooling mode test, Btu/W·h

$$CLF = \frac{q_{cyc,dry}}{Q_{ss,dry} \cdot \Delta\tau_{cyc,dry}},$$

the cooling load factor dimensionless.

Round the calculated value for C_D^c to the nearest 0.01. If C_D^c is negative, then set it equal to zero.

3.6 Heating mode tests for different types of heat pumps, including heating-only heat pumps.

3.6.1 Tests for a heat pump having a single-speed compressor that is tested with a fixed speed indoor fan installed, with a constant-air-volume-rate indoor fan installed, or with no indoor fan installed. Conduct three tests: The High Temperature (H1) Test, the Frost Accumulation (H2) Test, and the Low Temperature (H3) Test. Conduct the optional High Temperature Cyclic (H1C) Test to determine the heating mode cyclic degradation coefficient, C_D^h. If this optional test is not conducted, assign C_D^h the default value of 0.25. Test conditions for these four tests are specified in Table 9.

TABLE 9—HEATING MODE TEST CONDITIONS FOR UNITS HAVING A SINGLE-SPEED COMPRESSOR AND A FIXED-SPEED INDOOR FAN, A CONSTANT AIR VOLUME RATE INDOOR FAN, OR NO INDOOR FAN

Test description	Air entering indoor unit Temperature (°F)		Air entering outdoor unit Temperature (°F)		Heating air volume rate
	Dry bulb	Wet bulb	Dry bulb	Wet bulb	
H1 Test (required, steady)	70	60(max)	47	43	Heating Certified [1]
H1C Test (optional, cyclic)	70	60(max)	47	43	(2)
H2 Test (required)	70	60(max)	35	33	Heating Certified [1]
H3 Test (required, steady)	70	60(max)	17	15	Heating Certified [1]

[1] Defined in section 3.1.4.4.

[2] Maintain the airflow nozzles static pressure difference or velocity pressure during the ON period at the same pressure difference or velocity pressure as measured during the H1 Test.

3.6.2 Tests for a heat pump having a single-speed compressor and a variable-speed, variable-air-volume-rate indoor fan: capacity modulation correlates with outdoor dry bulb

temperature. Conduct five tests: two High Temperature Tests ($H1_2$ and $H1_1$), one Frost Accumulation Test ($H2_2$), and two Low Temperature Tests ($H3_2$ and $H3_1$). Conducting an additional Frost Accumulation Test ($H2_1$) is optional. Conduct the optional High Temperature Cyclic ($H1C_1$) Test to determine the heating mode cyclic degradation coefficient, C_D^h. If this optional test is not conducted, assign C_D^h the default value of 0.25. Table 10 specifies test conditions for these seven tests. If the optional $H2_1$ Test is not done, use the following equations to approximate the capacity and electrical power of the heat pump at the $H2_1$ test conditions:

$$\dot{Q}_h^{k=1}(35) = QR_h^{k=2}(35)\cdot\left\{\dot{Q}_h^{k=1}(17) + 0.6\cdot\left[\dot{Q}_h^{k=1}(47) - \dot{Q}_h^{k=1}(17)\right]\right\}$$

$$\dot{E}_h^{k=1}(35) = PR_h^{k=2}(35)\cdot\left\{\dot{E}_h^{k=1}(17) + 0.6\cdot\left[\dot{E}_h^{k=1}(47) - \dot{E}_h^{k=1}(17)\right]\right\}$$

where,

$$\dot{Q}R_h^{k=2}(35) = \frac{\dot{Q}_h^{k=2}(35)}{\dot{Q}^{k=2}(17) + 0.6\cdot\left[\dot{Q}_h^{k=2}(47) - \dot{Q}_h^{k=2}(17)\right]}$$

$$PR_h^{k=2}(35) = \frac{\dot{E}_h^{k=2}(35)}{\dot{E}_h^{k=2}(17) + 0.6\cdot\left[\dot{E}_h^{k=2}(47) - \dot{E}_h^{k=2}(17)\right]}.$$

The quantities $\dot{Q}_h^{k=2}(47)$, $\dot{E}_h^{k=2}(47)$, $\dot{Q}_h^{k=1}(47)$, and $\dot{E}_h^{k=1}(47)$ are determined from the $H1_2$ and $H1_1$ Tests and evaluated as specified in section 3.7; the quantities $\dot{Q}_h^{k=2}(35)$ and $\dot{E}_h^{k=2}(35)$ are determined from the $H2_2$ Test and evaluated as specified in section 3.9; and the quantities $\dot{Q}_h^{k=2}(17)$, $\dot{E}_h^{k=2}(17)$, $\dot{Q}_h^{k=1}(17)$, and $\dot{E}_h^{k=1}(17)$, are determined from the $H3_2$ and $H3_1$ Tests and evaluated as specified in section 3.10.

TABLE 10—HEATING MODE TEST CONDITIONS FOR UNITS HAVING A SINGLE-SPEED COMPRESSOR AND A VARIABLE AIR VOLUME RATE INDOOR FAN

Test description	Air entering indoor unit temperature (°F)		Air entering outdoor unit temperature (°F)		Heating air volume rate
	Dry bulb	Wet bulb	Dry bulb	Wet bulb	
$H1_2$ Test (required, steady)	70	$60^{(max)}$	47	43	Heating Certified.[1]
$H1_1$ Test (required, steady)	70	$60^{(max)}$	47	43	Heating Minimum.[2]
$H1C_1$ Test (optional, cyclic)	70	$60^{(max)}$	47	43	([3])
$H2_2$ Test (required)	70	$60^{(max)}$	35	33	Heating Certified.[1]
$H2_1$ Test (optional)	70	$60^{(max)}$	35	33	Heating Minimum.[2]
$H3_2$ Test (required, steady)	70	$60^{(max)}$	17	15	Heating Certified.[1]
$H3_1$ Test (required, steady)	70	$60^{(max)}$	17	15	Heating Minimum.[2]

[1] Defined in section 3.1.4.4.
[2] Defined in section 3.1.4.5.
[3] Maintain the airflow nozzles static pressure difference or velocity pressure during the ON period at the same pressure difference or velocity pressure as measured during the $H1_1$ Test.

3.6.3 Tests for a heat pump having a two-capacity compressor (see Definition 1.45), including two-capacity, northern heat pumps (see Definition 1.46). a. Conduct one Maximum Temperature Test ($H0_1$), two High Temperature Tests ($H1_2$ and $H1_1$), one Frost Accumulation Test ($H2_2$), and one Low Temperature Test ($H3_2$). Conduct an additional Frost Accumulation Test ($H2_1$) and Low Temperature Test ($H3_1$) if both of the following conditions exist:

1. Knowledge of the heat pump's capacity and electrical power at low compressor capacity for outdoor temperatures of 37 °F and less is needed to complete the section 4.2.3 seasonal performance calculations, and

2. The heat pump's controls allow low capacity operation at outdoor temperatures of 37 °F and less.

b. Conduct the optional Maximum Temperature Cyclic Test ($H0C_1$) to determine the heating mode cyclic degradation coefficient, C_D^h. If this optional test is not conducted, assign C_D^h the default value of 0.25. Table 11 specifies test conditions for these eight tests.

TABLE 11—HEATING MODE TEST CONDITIONS FOR UNITS HAVING A TWO-CAPACITY COMPRESSOR

Test description	Air entering indoor unit Temperature (°F)		Air entering outdoor unit Temperature (°F)		Compressor capacity	Heating air volume rate
	Dry Bulb	Wet Bulb	Dry Bulb	Wet Bulb		
$H0_1$ Test (required, steady)	70	60(max)	62	56.5	Low	Heating Minimum [1]
$H0C_1$ Test (optional, cyclic)	70	60(max)	62	56.5	Low	([2])
$H1_2$ Test (required, steady)	70	60(max)	47	43	High	Heating Certified [3]
$H1_1$ Test (required, steady)	70	60(max)	47	43	Low	Heating Minimum [1]
$H2_2$ Test (required)	70	60(max)	35	33	High	Heating Certified [3]
$H2_1$ Test [4] (required)	70	60(max)	35	33	Low	Heating Minimum [1]
$H3_2$ Test (required, steady)	70	60(max)	17	15	High	Heating Certified [3]
$H3_1$ Test [4] (required, steady)	70	60(max)	17	15	Low	Heating Minimum [1]

[1] Defined in section 3.1.4.5.
[2] Maintain the airflow nozzles static pressure difference or velocity pressure during the ON period at the same pressure difference or velocity pressure as measured during the $H0_1$ Test.
[3] Defined in section 3.1.4.4.
[4] Required only if the heat pump's performance when operating at low compressor capacity and outdoor temperatures less than 37 °F is needed to complete the section 4.2.3 HSPF calculations.

3.6.4 Tests for a heat pump having a variable-speed compressor. a. Conduct one Maximum Temperature Test ($H0_1$), two High Temperature Tests ($H1_2$ and $H1_1$), one Frost Accumulation Test ($H2_V$), and one Low Temperature Test ($H3_2$). Conducting one or both of the following tests is optional: An additional High Temperature Test ($H1_N$) and an additional Frost Accumulation Test ($H2_2$). Conduct the optional Maximum Temperature Cyclic ($H0C_1$) Test to determine the heating mode cyclic degradation coefficient, C_D^h. If this optional test is not conducted, assign C_D^h the default value of 0.25. Table 12 specifies test conditions for these eight tests. Determine the intermediate compressor speed cited in Table 12 using the heating mode maximum and minimum compressors speeds and:

$$\text{Intermediate speed} = \text{Minimum speed} + \frac{\text{Maximum speed} - \text{Minimum speed}}{3}$$

where a tolerance of plus 5 percent or the next higher inverter frequency step from that calculated is allowed. If the $H2_2$ Test is not done, use the following equations to approximate the capacity and electrical power at the $H2_2$ test conditions:

$$\dot{Q}_h^{k=2}(35) = 0.90 \cdot \left\{ \dot{Q}_h^{k=2}(17) + 0.6 \cdot \left[\dot{Q}_h^{k=2}(47) - \dot{Q}_h^{k=2}(17) \right] \right\}$$

$$\dot{E}_h^{k=2}(35) = 0.985 \cdot \left\{ \dot{E}_h^{k=2}(17) + 0.6 \cdot \left[\dot{E}_h^{k=2}(47) - \dot{E}_h^{k=2}(17) \right] \right\}.$$

b. Determine the quantities $\dot{Q}_h^{k=2}(47)$ and from $\dot{E}_h^{k=2}(47)$ from the $H1_2$ Test and evaluate them according to section 3.7. Determine the quantities $\dot{Q}_h^{k=2}(17)$ and $\dot{E}_h^{k=2}(17)$ from the $H3_2$ Test and evaluate them according to section 3.10. For heat pumps where the heating mode maximum compressor speed exceeds its cooling mode maximum compressor speed, conduct the $H1_N$ Test if the manufacturer requests it. If the $H1_N$ Test is done, operate the heat pump's compressor at the same speed as the speed used for the cooling mode A_2 Test. Refer to the last sentence of section 4.2 to see how the results of the $H1_N$ Test may be used in calculating the heating seasonal performance factor.

TABLE 12—HEATING MODE TEST CONDITIONS FOR UNITS HAVING A VARIABLE-SPEED COMPRESSOR

Test description	Air entering indoor unit temperature (°F)		Air entering outdoor unit temperature (°F)		Compressor speed	Heating air volume rate
	Dry bulb	Wet bulb	Dry bulb	Wet bulb		
$H0_1$ Test (required, steady)	70	$60^{(max)}$	62	56.5	Minimum	Heating Minimum.[1]
$H0C_1$ Test (optional, cyclic)	70	$60^{(max)}$	62	56.5	Minimum	([2])
$H1_2$ Test (required, steady)	70	$60^{(max)}$	47	43	Maximum	Heating Certified.[3]
$H1_1$ Test (required, steady)	70	$60^{(max)}$	47	43	Minimum	Heating Minimum.[1]
$H1_N$ Test (optional, steady)	70	$60^{(max)}$	47	43	Cooling Mode Maximum.	Heating Nominal.[4]
$H2_2$ Test (optional)	70	$60^{(max)}$	35	33	Maximum	Heating Certified.[3]
$H2_V$ Test (required)	70	$60^{(max)}$	35	33	Intermediate	Heating Intermediate.[5]
$H3_2$ Test (required, steady)	70	$60^{(max)}$	17	15	Maximum	Heating Certified.[3]

[1] Defined in section 3.1.4.5.
[2] Maintain the airflow nozzles static pressure difference or velocity pressure during the ON period at the same pressure difference or velocity pressure as measured during the $H0_1$ Test.
[3] Defined in section 3.1.4.4.
[4] Defined in section 3.1.4.7.
[5] Defined in section 3.1.4.6.

3.6.5 Additional test for a heat pump having a heat comfort controller. Test any heat pump that has a heat comfort controller (see Definition 1.28) according to section 3.6.1, 3.6.2, or 3.6.3, whichever applies, with the heat comfort controller disabled. Additionally, conduct the abbreviated test described in section 3.1.9 with the heat comfort controller active to determine the system's maximum supply air temperature. (Note: heat pumps having a variable speed compressor and a heat comfort controller are not covered in the test procedure at this time.)

3.7 Test procedures for steady-state Maximum Temperature and High Temperature heating mode tests (the $H0_1$, H1, $H1_2$, $H1_1$, and $H1_N$ Tests). a. For the pretest interval, operate the test room reconditioning apparatus and the heat pump until equilibrium conditions are maintained for at least 30 minutes at the specified section 3.6 test conditions. Use the exhaust fan of the airflow measuring apparatus and, if installed, the indoor fan of the heat pump to obtain and then maintain the indoor air volume rate and/or the external static pressure specified for the particular test. Continuously record the dry-bulb temperature of the air entering the indoor coil, and the dry-bulb temperature and water vapor content of the air entering the outdoor coil. Refer to section 3.11 for additional requirements that depend on the selected secondary test method. After satisfying the pretest equilibrium requirements, make the measurements specified in Table 5 of ASHRAE Standard 37–88 (incorporated by reference, see §430.22) for the Indoor Air Enthalpy method and the user-selected secondary method. Except for external static pressure, make the Table 5 measurements at equal intervals that span 10 minutes or less. Measure external static pressure every 5 minutes or less. Continue data sampling until a 30-minute period (*e.g.*, four consecutive 10-minute samples) is reached where the test tolerances specified in Table 13 are satisfied. For those continuously recorded parameters, use the entire data set for the 30-minute interval when evaluating Table 13 compliance. Determine the average electrical power consumption of the heat pump over the same 30-minute interval.

TABLE 13—TEST OPERATING AND TEST CONDITION TOLERANCES FOR SECTION 3.7 AND SECTION 3.10 STEADY-STATE HEATING MODE TESTS

	Test operating tolerance[1]	Test condition tolerance[2]
Indoor dry-bulb, °F:		
Entering temperature	2.0	0.5
Leaving temperature	2.0	
Indoor wet-bulb, °F:		
Entering temperature	1.0	
Leaving temperature	1.0	
Outdoor dry-bulb, °F:		
Entering temperature	2.0	0.5
Leaving temperature	[2] 2.0	
Outdoor wet-bulb, °F:		
Entering temperature	1.0	0.3

TABLE 13—TEST OPERATING AND TEST CONDITION TOLERANCES FOR SECTION 3.7 AND SECTION 3.10 STEADY-STATE HEATING MODE TESTS—Continued

	Test operating tolerance [1]	Test condition tolerance [2]
Leaving temperature	[3] 1.0	
External resistance to airflow, inches of water	0.05	[4] 0.02
Electrical voltage, % of rdg	2.0	1.5
Nozzle pressure drop, % of rdg	2.0	

[1] See Definition 1.41.
[2] See Definition 1.40.
[3] Only applies when the Outdoor Air Enthalpy Method is used.
[4] Only applies when testing non-ducted units.

b. Calculate indoor-side total heating capacity as specified in section 7.3.4.1 of ASHRAE Standard 37–88 (incorporated by reference, see §430.22). Do not adjust the parameters used in calculating capacity for the permitted variations in test conditions. Assign the average space heating capacity and electrical power over the 30-minute data collection interval to the variables $\dot{Q}_h^k$ and $\dot{E}_h^k(T)$ respectively. The ''T'' and superscripted ''k'' are the same as described in section 3.3. Additionally, for the heating mode, use the superscript to denote results from the optional $H1_N$ Test, if conducted.

c. For heat pumps tested without an indoor fan installed, increase $\dot{Q}_h^k(T)$ by

$$\frac{1250\ \text{Btu/h}}{1000\ \text{scfm}} \cdot \overline{\dot{V}}_s,$$

and increase $\dot{E}_h^k(T)$ by,

$$\frac{365\ \text{W}}{1000\ \text{scfm}} \cdot \overline{\dot{V}}_s,$$

where $\overline{\dot{V}}_s$ is the average measured indoor air volume rate expressed in units of cubic feet per minute of standard air (scfm). During the 30-minute data collection interval of a High Temperature Test, pay attention to preventing a defrost cycle. Prior to this time, allow the heat pump to perform a defrost cycle if automatically initiated by its own controls. As in all cases, wait for the heat pump's defrost controls to automatically terminate the defrost cycle. Heat pumps that undergo a defrost should operate in the heating mode for at least 10 minutes after defrost termination prior to beginning the 30-minute data collection interval. For some heat pumps, frost may accumulate on the outdoor coil during a High Temperature test. If the indoor coil leaving air temperature or the difference between the leaving and entering air temperatures decreases by more than 1.5 °F over the 30-minute data collection interval, then do not use the collected data to determine capacity. Instead, initiate a defrost cycle. Begin collecting data no sooner than 10 minutes after defrost termination. Collect 30 minutes of new data during which the Table 13 test tolerances are satisfied. In this case, use only the results from the second 30-minute data collection interval to evaluate $\dot{Q}_h^k(47)$ and $\dot{E}_h^k(47)$.

d. If conducting the optional cyclic heating mode test, which is described in section 3.8, record the average indoor-side air volume rate, $\overline{\dot{V}}$, specific heat of the air, $C_{p,a}$ (expressed on dry air basis), specific volume of the air at the nozzles, v_n' (or v_n), humidity ratio at the nozzles, W_n, and either pressure difference or velocity pressure for the flow nozzles. If either or both of the below criteria apply, determine the average, steady-state, electrical power consumption of the indoor fan motor ($\dot{E}_{fan,1}$):

1. The section 3.8 cyclic test will be conducted and the heat pump has a variable-speed indoor fan that is expected to be disabled during the cyclic test; or

2. The heat pump has a (variable-speed) constant-air volume-rate indoor fan and during the steady-state test the average external static pressure (ΔP_1) exceeds the applicable section 3.1.4.4 minimum (or targeted) external static pressure (ΔP_{min}) by 0.03 inches of water or more.

Determine $\dot{E}_{fan,1}$ by making measurements during the 30-minute data collection interval, or immediately following the test and prior to changing the test conditions. When the above ''2'' criteria applies, conduct the following four steps after determining $\dot{E}_{fan,1}$ (which corresponds to ΔP_1):

i. While maintaining the same test conditions, adjust the exhaust fan of the airflow measuring apparatus until the external static pressure increases to approximately $\Delta P_1 + (\Delta P_1 - \Delta P_{min})$.

ii. After re-establishing steady readings for fan motor power and external static pressure, determine average values for the indoor fan power ($\dot{E}_{fan,2}$) and the external static pressure (ΔP_2) by making measurements over a 5-minute interval.

iii. Approximate the average power consumption of the indoor fan motor if the 30-minute test had been conducted at ΔP_{min} using linear extrapolation:

$$\dot{E}_{fan,min} = \frac{\dot{E}_{fan,2} - \dot{E}_{fan,1}}{\Delta P_2 - \Delta P_1}\left(\Delta P_{min} - \Delta P_1\right) + \dot{E}_{fan,1}.$$

iv. Decrease the total space heating capacity, $\dot{Q}_h^k(T)$, by the quantity ($\dot{E}_{fan,1} - \dot{E}_{fan,min}$), when expressed on a Btu/h basis. Decrease the total electrical power, $\dot{E}_h^k(T)$ by the same fan power difference, now expressed in watts.

3.8 Test procedures for the optional cyclic heating mode tests (the $H0C_1$, H1C, and $H1C_1$ Tests). a. Except as noted below, conduct the cyclic heating mode test as specified in section 3.5. As adapted to the heating mode, replace section 3.5 references to ''the steady-state dry coil test'' with ''the heating mode steady-state test conducted at the same test conditions as the cyclic heating mode test.'' Use the test tolerances in Table 14 rather than Table 8. Record the outdoor coil entering wet-bulb temperature according to the requirements given in section 3.5 for the outdoor coil entering dry-bulb temperature. Drop the subscript ''dry'' used in variables cited in section 3.5 when referring to quantities from the cyclic heating mode test. Determine the total space heating delivered during the cyclic heating test, q_{cyc}, as specified in section 3.5 except for making the following changes:

(1) When evaluating Equation 3.5–1, use the values of $\bar{V}$, $C_{p,a}$,v_n', (or v_n), and W_n that were recorded during the section 3.7 steady-state test conducted at the same test conditions.

(2) Calculate Γ using,

$$\Gamma = \int_{\tau_1}^{\tau_2}\left[T_{a2}(\tau) - T_{a1}(\tau)\right]\delta\tau,\ \mathrm{hr}\cdot{}^\circ\mathrm{F}.$$

b. For ducted heat pumps tested without an indoor fan installed (excluding the special case where a variable-speed fan is temporarily removed), increase q_{cyc} by the amount calculated using Equation 3.5–3. Additionally, increase e_{cyc} by the amount calculated using Equation 3.5–2. In making these calculations, use the average indoor air volume rate ($\bar{V}_s$) determined from the section 3.7 steady-state heating mode test conducted at the same test conditions.

c. For non-ducted heat pumps, subtract the electrical energy used by the indoor fan during the 3 minutes after compressor cutoff from the non-ducted heat pump's integrated heating capacity, q_{cyc}.

d. If a heat pump defrost cycle is manually or automatically initiated immediately prior to or during the OFF/ON cycling, operate the heat pump continuously until 10 minutes after defrost termination. After that, begin cycling the heat pump immediately or delay until the specified test conditions have been re-established. Pay attention to preventing defrosts after beginning the cycling process. For heat pumps that cycle off the indoor fan during a defrost cycle, make no effort here to restrict the air movement through the indoor coil while the fan is off. Resume the OFF/ON cycling while conducting a minimum of two complete compressor OFF/ON cycles before determining q_{cyc} and e_{cyc}.

3.8.1 Heating mode cyclic degradation coefficient calculation. Use the results from the optional cyclic test and the required steady-state test that were conducted at the same test conditions to determine the heating mode cyclic degradation coefficient, C_D^h. If the optional test is not conducted, assign C_D^h the default value of 0.25.

$$C_D^h = \frac{1 - \dfrac{COP_{cyc}}{COP_{ss}\left(T_{cyc}\right)}}{1 - HLF}$$

where,

$$COP_{cyc} = \frac{q_{cyc}}{3.413\dfrac{\mathrm{Btu/h}}{\mathrm{W}}\cdot e_{cyc}},$$

the average coefficient of performance during the cyclic heating mode test, dimensionless.

$$COP_{ss}\left(T_{cyc}\right) = \frac{\dot{Q}_h^k\left(T_{cyc}\right)}{3.413\dfrac{\mathrm{Btu/h}}{\mathrm{W}}\cdot \dot{E}_h^k\left(T_{cyc}\right)},$$

the average coefficient of performance during the steady-state heating mode test conducted at the same test conditions—*i.e.*, same outdoor dry bulb temperature, T_{cyc}, and speed/capacity, k, if applicable—as specified for the cyclic heating mode test, dimensionless.

$$HLF = \frac{q_{cyc}}{\dot{Q}_h^k\left(T_{cyc}\right)\cdot \Delta\tau_{cyc}},$$

the heating load factor, dimensionless.

T_{cyc} = the nominal outdoor temperature at which the cyclic heating mode test is conducted, 62 or 47 °F.

$\Delta\tau_{cyc}$ = the duration of the OFF/ON intervals; 0.5 hours when testing a heat pump having a single-speed or two-capacity compressor and 1.0 hour when testing a heat pump having a variable-speed compressor.

Round the calculated value for C_D^h to the nearest 0.01. If C_D^h is negative, then set it equal to zero.

TABLE 14—TEST OPERATING AND TEST CONDITION TOLERANCES FOR CYCLIC HEATING MODE TESTS.

	Test operating tolerance [1]	Test condition tolerance [2]
Indoor entering dry-bulb temperature,[3] °F	2.0	0.5
Indoor entering wet-bulb temperature,[3] °F	1.0	
Outdoor entering dry-bulb temperature,[3] °F	2.0	0.5
Outdoor entering wet-bulb temperature,[3] °F	2.0	1.0
External resistance to air-flow,[3] inches of water	0.05	
Airflow nozzle pressure difference or velocity pressure,[3] % of reading	2.0	[4] 2.0
Electrical voltage,[5] % of rdg	2.0	1.5

[1] See Definition 1.41.
[2] See Definition 1.40.
[3] Applies during the interval that air flows through the indoor (outdoor) coil except for the first 30 seconds after flow initiation. For units having a variable-speed indoor fan that ramps, the tolerances listed for the external resistance to airflow shall apply from 30 seconds after achieving full speed until ramp down begins.
[4] The test condition shall be the average nozzle pressure difference or velocity pressure measured during the steady-state test conducted at the same test conditions.
[5] Applies during the interval that at least one of the following—the compressor, the outdoor fan, or, if applicable, the indoor fan—are operating, except for the first 30 seconds after compressor start-up.

3.9 Test procedures for Frost Accumulation heating mode tests (the H2, $H2_2$, $H2_V$, and $H2_1$ Tests). a. Confirm that the defrost controls of the heat pump are set as specified in section 2.2.1. Operate the test room reconditioning apparatus and the heat pump for at least 30 minutes at the specified section 3.6 test conditions before starting the ''preliminary'' test period. The preliminary test period must immediately precede the ''official'' test period, which is the heating and defrost interval over which data are collected for evaluating average space heating capacity and average electrical power consumption.

b. For heat pumps containing defrost controls which are likely to cause defrosts at intervals less than one hour, the preliminary test period starts at the termination of an automatic defrost cycle and ends at the termination of the next occurring automatic defrost cycle. For heat pumps containing defrost controls which are likely to cause defrosts at intervals exceeding one hour, the preliminary test period must consist of a heating interval lasting at least one hour followed by a defrost cycle that is either manually or automatically initiated. In all cases, the heat pump's own controls must govern when a defrost cycle terminates.

c. The official test period begins when the preliminary test period ends, at defrost termination. The official test period ends at the termination of the next occurring automatic defrost cycle. When testing a heat pump that uses a time-adaptive defrost control system (see Definition 1.42), however, manually initiate the defrost cycle that ends the official test period at the instant indicated by instructions provided by the manufacturer. If the heat pump has not undergone a defrost after 12 hours, immediately conclude the test and use the results from the full 12-hour period to calculate the average space heating capacity and average electrical power consumption. For heat pumps that turn the indoor fan off during the defrost cycle, take steps to cease forced airflow through the indoor coil and block the outlet duct whenever the heat pump's controls cycle off the indoor fan. If it is installed, use the outlet damper box described in section 2.5.4.1 to affect the blocked outlet duct.

d. Defrost termination occurs when the controls of the heat pump actuate the first change in converting from defrost operation to normal heating operation. Defrost initiation occurs when the controls of the heat pump first alter its normal heating operation in order to eliminate possible accumulations of frost on the outdoor coil.

e. To constitute a valid Frost Accumulation test, satisfy the test tolerances specified in Table 15 during both the preliminary and official test periods. As noted in Table 15, test operating tolerances are specified for two sub-intervals: (1) When heating, except for the first 10 minutes after the termination of a defrost cycle (Sub-interval H, as described in Table 15) and (2) when defrosting, plus these same first 10 minutes after defrost termination (Sub-interval D, as described in Table 15). Evaluate compliance with Table 15 test condition tolerances and the majority of the test operating tolerances using the averages from measurements recorded only during Sub-interval H. Continuously record the dry bulb temperature of the air entering the indoor coil, and the dry bulb temperature and water vapor content of the air entering the outdoor coil. Sample the remaining parameters listed in Table 15 at equal intervals that span 10 minutes or less.

f. For the official test period, collect and use the following data to calculate average space heating capacity and electrical power. During heating and defrosting intervals when the controls of the heat pump have the indoor fan on, continuously record the dry-bulb temperature of the air entering (as noted above) and leaving the indoor coil. If using a thermopile, continuously record the difference between the leaving and entering dry-bulb temperatures during the interval(s) that air flows through the indoor coil. For heat pumps tested without an indoor fan installed, determine the corresponding cumulative time (in hours) of indoor coil airflow, $\Delta\tau_a$. Sample measurements used in calculating the air volume rate (refer to sections 7.8.3.1 and 7.8.3.2 of ASHRAE Standard 37–88 (incorporated by reference, see §430.22)) at equal intervals that span 10 minutes or less.

Record the electrical energy consumed, expressed in watt-hours, from defrost termination to defrost termination, $e_{DEF}^{k}(35)$, as well as the corresponding elapsed time in hours, $\Delta\tau_{FR}$.

TABLE 15—TEST OPERATING AND TEST CONDITION TOLERANCES FOR FROST ACCUMULATION HEATING MODE TESTS.

	Test operating tolerance [1]		Test condition tolerance [2] Sub-interval H [3]
	Sub-interval H [3]	Sub-interval D [4]	
Indoor entering dry-bulb temperature, °F	2.0	[5] 4.0	0.5
Indoor entering wet-bulb temperature, °F	1.0	.....	
Outdoor entering dry-bulb temperature, °F	2.0	10.0	1.0
Outdoor entering wet-bulb temperature, °F	1.5	.....	0.5
External resistance to airflow, inches of water	0.05	.....	0.02 [6]
Electrical voltage, % of rdg	2.0	.....	1.5

[1] See Definition 1.41.
[2] See Definition 1.40.
[3] Applies when the heat pump is in the heating mode, except for the first 10 minutes after termination of a defrost cycle.
[4] Applies during a defrost cycle and during the first 10 minutes after the termination of a defrost cycle when the heat pump is operating in the heating mode.
[5] For heat pumps that turn off the indoor fan during the defrost cycle, the noted tolerance only applies during the 10 minute interval that follows defrost termination.
[6] Only applies when testing non-ducted heat pumps.

3.9.1 Average space heating capacity and electrical power calculations. a. Evaluate average space heating capacity, $\dot{Q}_h^k(35)$, when expressed in units of Btu per hour, using:

$$\dot{Q}_h^k(35) = \frac{60 \cdot \overline{\dot{V}} \cdot C_{p,a} \cdot \Gamma}{\Delta\tau_{FR}\left[v_n' \cdot \left(1 + W_n\right)\right]} = \frac{60 \cdot \overline{\dot{V}} \cdot C_{p,a} \cdot \Gamma}{\Delta\tau_{FR} \cdot v_n}$$

where,

$\overline{\dot{V}}$ = the average indoor air volume rate measured during Sub-interval H, cfm.

$C_{p,a} = 0.24 + 0.444 \cdot W_n$, the constant pressure specific heat of the air-water vapor mixture that flows through the indoor coil and is expressed on a dry air basis, Btu / lbm_{da} · °F.

v_n' = specific volume of the air-water vapor mixture at the nozzle, ft^3 / lbm_{mx}.

W_n = humidity ratio of the air-water vapor mixture at the nozzle, lbm of water vapor per lbm of dry air.

$\Delta\tau_{FR} = \tau_2 - \tau_1$, the elapsed time from defrost termination to defrost termination, hr.

$$\Gamma = \int_{\tau_1}^{\tau_2} \left[T_{a2}(\tau) - T_{a1}(\tau)\right] d\tau,\ \text{hr} \cdot {}^\circ\text{F}.$$

$T_{a1}(\tau)$ = dry bulb temperature of the air entering the indoor coil at elapsed time τ, °F; only recorded when indoor coil airflow occurs; assigned the value of zero during periods (if any) where the indoor fan cycles off.

$T_{a2}(\tau)$ = dry bulb temperature of the air leaving the indoor coil at elapsed time τ, °F; only recorded when indoor coil airflow occurs; assigned the value of zero during periods (if any) where the indoor fan cycles off.

τ_1 = the elapsed time when the defrost termination occurs that begins the official test period, hr.

τ_2 = the elapsed time when the next automatically occurring defrost termination occurs, thus ending the official test period, hr.

v_n = specific volume of the dry air portion of the mixture evaluated at the dry-bulb temperature, vapor content, and barometric pressure existing at the nozzle, ft^3 per lbm of dry air.

b. Evaluate average electrical power, $\dot{E}_h^k(35)$, when expressed in units of watts, using:

$$\dot{E}_h^k(35) = \frac{e_{def}(35)}{\Delta\tau_{FR}}.$$

For heat pumps tested without an indoor fan installed, increase $\dot{Q}_h^k(35)$ by,

$$\frac{1250\ \text{Btu/h}}{1000\ \text{scfm}} \cdot \overline{\dot{V}}_s \cdot \frac{\Delta\tau_a}{\Delta\tau_{FR}},$$

and increase $\dot{E}_h^k(35)$ by,

$$\frac{365\ \text{W}}{1000\ \text{scfm}} \cdot \overline{\dot{V}}_s \cdot \frac{\Delta\tau_a}{\Delta\tau_{FR}},$$

where $\overline{\dot{V}}_s$ is the average indoor air volume rate measured during the Frost Accumulation heating mode test and is expressed in units of cubic feet per minute of standard air (scfm).

c. For heat pumps having a constant-air-volume-rate indoor fan, the five additional steps listed below are required if the average of the external static pressures measured during sub-Interval H exceeds the applicable section 3.1.4.4, 3.1.4.5, or 3.1.4.6 minimum (or targeted) external static pressure (ΔP_{min}) by 0.03 inches of water or more:

1. Measure the average power consumption of the indoor fan motor ($\dot{E}_{fan,1}$) and record the corresponding external static pressure (ΔP_1) during or immediately following the Frost Accumulation heating mode test. Make the measurement at a time when the heat pump is heating, except for the first 10 minutes after the termination of a defrost cycle.

2. After the Frost Accumulation heating mode test is completed and while maintaining the same test conditions, adjust the exhaust fan of the airflow measuring apparatus until the external static pressure increases to approximately $\Delta P_1 + (\Delta P_1 - \Delta P_{min})$.

3. After re-establishing steady readings for the fan motor power and external static pressure, determine average values for the indoor fan power ($\dot{E}_{fan,2}$) and the external static pressure (ΔP_2) by making measurements over a 5-minute interval.

4. Approximate the average power consumption of the indoor fan motor had the Frost Accumulation heating mode test been conducted at ΔP_{min} using linear extrapolation:

$$\dot{E}_{fan,min} = \frac{\dot{E}_{fan,2} - \dot{E}_{fan,1}}{\Delta P_2 - \Delta P_1}\left(\Delta P_{min} - \Delta P_1\right) + \dot{E}_{fan,1}\,.$$

5. Decrease the total heating capacity, $\dot{Q}_h^k(35)$, by the quantity $[(\dot{E}_{fan,1} - \dot{E}_{fan,min}) \cdot (\Delta\tau_a/\Delta\tau_{FR}]$, when expressed on a Btu/h basis. Decrease the total electrical power, $E_h^k(35)$, by the same quantity, now expressed in watts.

3.9.2 Demand defrost credit. a. Assign the demand defrost credit, F_{def}, that is used in section 4.2 to the value of 1 in all cases except for heat pumps having a demand-defrost control system (Definition 1.21). For such qualifying heat pumps, evaluate F_{def} using,

$$F_{def} = 1 + 0.03 \cdot \left[1 - \frac{\Delta\tau_{def} - 1.5}{\Delta\tau_{max} - 1.5}\right],$$

where,

$\Delta\tau_{def}$ = the time between defrost terminations (in hours) or 1.5, whichever is greater.

$\Delta\tau_{max}$ = maximum time between defrosts as allowed by the controls (in hours) or 12, whichever is less.

b. For two-capacity heat pumps and for section 3.6.2 units, evaluate the above equation using the $\Delta\tau_{def}$ that applies based on the Frost Accumulation Test conducted at high capacity and/or at the Heating Certified Air Volume Rate. For variable-speed heat pumps, evaluate $\Delta\tau_{def}$ based on the required Frost Accumulation Test conducted at the intermediate compressor speed.

3.10 Test procedures for steady-state Low Temperature heating mode tests (the H3, $H3_2$, and $H3_1$ Tests). Except for the modifications noted in this section, conduct the Low Temperature heating mode test using the same approach as specified in section 3.7 for the Maximum and High Temperature tests. After satisfying the section 3.7 requirements for the pretest interval but before beginning to collect data to determine $\dot{Q}_h^k(17)$ and $\dot{E}_h^k(17)$, conduct a defrost cycle. This defrost cycle may be manually or automatically initiated. The defrost sequence must be terminated by the action of the heat pump's defrost controls. Begin the 30-minute data collection interval described in section 3.7, from which $\dot{Q}_h^k(17)$ and $\dot{E}_h^k(17)$ are determined, no sooner than 10 minutes after defrost termination. Defrosts should be prevented over the 30-minute data collection interval.

3.11 Additional requirements for the secondary test methods. Prior to evaluating if the energy balance specified in section 3.1.1 is obtained, make an adjustment to account for the energy loss within the air duct that connects the indoor coil and the location where the outlet dry-bulb temperature is measured. If using the Outdoor Air Enthalpy Method, make an adjustment to account for the energy loss within the air duct that connects the outdoor coil and the location where the outlet temperature is measured. In all cases, apply the correction to the indoor space conditioning capacity that is determined using the secondary test method.

3.11.1 If using the Outdoor Air Enthalpy Method as the secondary test method. During the ''official'' test, the outdoor air-side test apparatus described in section 2.10.1 is connected to the outdoor unit. To help compensate for any effect that the addition of

this test apparatus may have on the unit's performance, conduct a ''preliminary'' test where the outdoor air-side test apparatus is disconnected. Conduct a preliminary test prior to the first section 3.2 steady-state cooling mode test and prior to the first section 3.6 steady-state heating mode test. No other preliminary tests are required so long as the unit operates the outdoor fan during all cooling mode steady-state tests at the same speed and all heating mode steady-state tests at the same speed. If using more than one outdoor fan speed for the cooling mode steady-state tests, however, conduct a preliminary test prior to each cooling mode test where a different fan speed is first used. This same requirement applies for the heating mode tests.

3.11.1.1 If a preliminary test precedes the official test. a. The test conditions for the preliminary test are the same as specified for the official test. Connect the indoor air-side test apparatus to the indoor coil; disconnect the outdoor air-side test apparatus. Allow the test room reconditioning apparatus and the unit being tested to operate for at least one hour. After attaining equilibrium conditions, measure the following quantities at equal intervals that span 10 minutes or less:

1. The section 2.10.1 evaporator and condenser temperatures or pressures;

2. Parameters required according to the Indoor Air Enthalpy Method.

Continue these measurements until a 30-minute period (*e.g.*, four consecutive 10-minute samples) is obtained where the Table 7 or Table 13, whichever applies, test tolerances are satisfied.

b. After collecting 30 minutes of steady-state data, reconnect the outdoor air-side test apparatus to the unit. Adjust the exhaust fan of the outdoor airflow measuring apparatus until averages for the evaporator and condenser temperatures, or the saturated temperatures corresponding to the measured pressures, agree within ±0.5 °F of the averages achieved when the outdoor air-side test apparatus was disconnected. Calculate the averages for the reconnected case using five or more consecutive readings taken at one minute intervals. Make these consecutive readings after re-establishing equilibrium conditions and before initiating the official test.

3.11.1.2 If a preliminary test does not precede the official test. Connect the outdoor-side test apparatus to the unit. Adjust the exhaust fan of the outdoor airflow measuring apparatus to achieve the same external static pressure as measured during the prior preliminary test conducted with the unit operating in the same cooling or heating mode at the same outdoor fan speed.

3.11.1.3 Official test. a. Continue (preliminary test was conducted) or begin (no preliminary test) the official test by making measurements for both the Indoor and Outdoor Air Enthalpy Methods at equal intervals that span 10 minutes or less. Discontinue these measurement only after obtaining a 30-minute period where the specified test condition and test operating tolerances are satisfied. To constitute a valid official test:

(1) Achieve the energy balance specified in section 3.1.1; and,

(2) For cases where a preliminary test is conducted, the capacities determined using the Indoor Air Enthalpy Method from the official and preliminary test periods must agree within 2.0 percent.

b. For space cooling tests, calculate capacity from the outdoor air enthalpy measurements as specified in section 7.3.3.2 of ASHRAE Standard 37–88 (incorporated by reference, see §430.22). Calculate heating capacity based on outdoor air enthalpy measurements as specified in section 7.3.4.2 of the same ASHRAE Standard. Adjust outdoor side capacities according to section 7.3.3.3 of ASHRAE Standard 37–88 (incorporated by reference, see §430.22) to account for line losses when testing split systems. Do not correct the average electrical power measurement as described in section 8.5.3 of ASHRAE Standard 37–88 (incorporated by reference, see §430.22).

3.11.2 If using the Compressor Calibration Method as the secondary test method.

a. Conduct separate calibration tests using a calorimeter to determine the refrigerant flow rate. Or for cases where the superheat of the refrigerant leaving the evaporator is less than 5 °F, use the calorimeter to measure total capacity rather than refrigerant flow rate. Conduct these calibration tests at the same test conditions as specified for the tests in this Appendix. Operate the unit for at least one hour or until obtaining equilibrium conditions before collecting data that will be used in determining the average refrigerant flow rate or total capacity. Sample the data at equal intervals that span 10 minutes or less. Determine average flow rate or average capacity from data sampled over a 30-minute period where the Table 7 (cooling) or the Table 13 (heating) tolerances are satisfied. Otherwise, conduct the calibration tests according to ASHRAE Standard 23–93 (incorporated by reference, see §430.22), ASHRAE Standard 41.9–00 (incorporated by reference, see §430.22), and section 7.5 of ASHRAE Standard 37–88 (incorporated by reference, see §430.22).

b. Calculate space cooling and space heating capacities using the compressor calibration method measurements as specified in sections 7.5.7 and 7.5.8, respectively, of ASHRAE Standard 37–88 (incorporated by reference, see §430.22).

3.11.3 If using the Refrigerant Enthalpy Method as the secondary test method. Conduct this secondary method according to section 7.6 of ASHRAE Standard 37–88 (incorporated by reference, see §430.22). Calculate space cooling and space heating capacities using the refrigerant enthalpy method measurements as specified in sections 7.6.4 and 7.6.5, respectively, of the same ASHRAE Standard.

3.12 Rounding of space conditioning capacities for reporting purposes.

a. When reporting rated capacities, round them off as follows:

1. For capacities less than 20,000 Btu/h, round to the nearest 100 Btu/h.

2. For capacities between 20,000 and 37,999 Btu/h, round to the nearest 200 Btu/h.

3. For capacities between 38,000 and 64,999 Btu/h, round to the nearest 500 Btu/h.

b. For the capacities used to perform the section 4 calculations, however, round only to the nearest integer.

4. CALCULATIONS OF SEASONAL PERFORMANCE DESCRIPTORS

4.1 Seasonal Energy Efficiency Ratio (SEER) Calculations. SEER must be calculated as follows: For equipment covered under sections 4.1.2, 4.1.3, and 4.1.4, evaluate the seasonal energy efficiency ratio,

$$\mathrm{SEER} = \frac{\sum_{j=1}^{8} q_c\left(T_j\right)}{\sum_{j=1}^{8} e_c\left(T_j\right)} = \frac{\sum_{j=1}^{8} \frac{q_c\left(T_j\right)}{N}}{\sum_{j=1}^{8} \frac{e_c\left(T_j\right)}{N}} \qquad (4.1\text{-}1)$$

where,

$$\frac{q_c\left(T_j\right)}{N} =$$

the ratio of the total space cooling provided during periods of the space cooling season when the outdoor temperature fell within the range represented by bin temperature T_j to the total number of hours in the cooling season (N), Btu/h.

$$\frac{e_c\left(T_j\right)}{N} =$$

the electrical energy consumed by the test unit during periods of the space cooling season when the outdoor temperature fell within the range represented by bin temperature T_j to the total number of hours in the cooling season (N), W.

T_j = the outdoor bin temperature, °F. Outdoor temperatures are grouped or ''binned.'' Use bins of 5 °F with the 8 cooling season bin temperatures being 67, 72, 77, 82, 87, 92, 97, and 102 °F.

j = the bin number. For cooling season calculations, j ranges from 1 to 8.

Additionally, for sections 4.1.2, 4.1.3, and 4.1.4, use a building cooling load, $BL(T_j)$. When referenced, evaluate $BL(T_j)$ for cooling using,

$$\mathrm{BL}\left(T_j\right) = \frac{\left(T_j - 65\right)}{95 - 65} \cdot \frac{\dot{Q}_c^{k=2}(95)}{1.1} \qquad (4.1\text{-}2)$$

where,

$\dot{Q}_c^{k=2}(95)$ = the space cooling capacity determined from the A_2 Test and calculated as specified in section 3.3, Btu/h.

1.1 = sizing factor, dimensionless.

The temperatures 95 °F and 65 °F in the building load equation represent the selected outdoor design temperature and the zero-load base temperature, respectively.

4.1.1 SEER calculations for an air conditioner or heat pump having a single-speed compressor that was tested with a fixed-speed indoor fan installed, a constant-air-volume-rate indoor fan installed, or with no indoor fan installed. a. Evaluate the seasonal energy efficiency ratio, expressed in units of Btu/watt-hour, using:

$\mathrm{SEER} = \mathrm{PLF}(0.5) \cdot \mathrm{EER}_B$

where,

$$EER_B = \frac{\dot{Q}_c(82)}{\dot{E}_c(82)},$$

the energy efficiency ratio determined from the B Test described in sections 3.2.1, 3.1.4.1, and 3.3, Btu/h per watt.

$PLF(0.5) = 1 - 0.5 \cdot C_D^c$, the part-load performance factor evaluated at a cooling load factor of 0.5, dimensionless.

b. Refer to section 3.3 regarding the definition and calculation of $\dot{Q}_c(82)$ and $\dot{E}_c(82)$. If the optional tests described in section 3.2.1 are not conducted, set the cooling mode cyclic degradation coefficient, C_D^c, to the default value specified in section 3.5.3. If these optional tests are conducted, set C_D^c to the lower of:

1. The value calculated as per section 3.5.3; or

2. The section 3.5.3 default value of 0.25.

4.1.2 SEER calculations for an air conditioner or heat pump having a single-speed compressor and a variable-speed variable-air-volume-rate indoor fan.

4.1.2.1 Units covered by section 3.2.2.1 where indoor fan capacity modulation correlates with the outdoor dry bulb temperature. The manufacturer must provide information on how the indoor air volume rate or the indoor fan speed varies over the outdoor temperature range of 67 °F to 102 °F. Calculate SEER using Equation 4.1–1. Evaluate the quantity $q_c(T_j)/N$ in Equation 4.1–1 using,

$$\frac{q_c(T_j)}{N} = X(T_j) \cdot \dot{Q}_c(T_j) \cdot \frac{n_j}{N} \qquad (4.1.2\text{-}1)$$

where,

$$X(T_j) = \begin{Bmatrix} BL(T_j)/\dot{Q}_c(T_j) \\ \text{or} \\ 1 \end{Bmatrix};$$

whichever is less; the cooling mode load factor for temperature bin j, dimensionless.

$\dot{Q}_c(T_j)$ = the space cooling capacity of the test unit when operating at outdoor temperature, T_j, Btu/h.

n_j/N = fractional bin hours for the cooling season; the ratio of the number of hours during the cooling season when the outdoor temperature fell within the range represented by bin temperature T_j to the total number of hours in the cooling season, dimensionless.

a. For the space cooling season, assign n_j/N as specified in Table 16. Use Equation 4.1–2 to calculate the building load, $BL(T_j)$. Evaluate $\dot{Q}_c(T_j)$ using,

$$\dot{Q}_c(T_j) = \dot{Q}_c^{k=1}(T_j) + \frac{\dot{Q}_c^{k=2}(T_j) - \dot{Q}_c^{k=1}(T_j)}{FP_c^{k=2} - FP_c^{k=1}} \cdot \left[FP_c(T_j) - FP_c^{k=1}\right] \qquad (4.1.2\text{-}2)$$

where,

$$\dot{Q}_c^{k=1}(T_j) = \dot{Q}_c^{k=1}(82) + \frac{\dot{Q}_c^{k=1}(95) - \dot{Q}_c^{k=1}(82)}{95 - 82} \cdot (T_j - 82),$$

the space cooling capacity of the test unit at outdoor temperature T_j if operated at the Cooling Minimum Air Volume Rate, Btu/h.

$$\dot{Q}_c^{k=2}\left(T_j\right) = \dot{Q}_c^{k=2}(82) + \frac{\dot{Q}_c^{k=2}(95) - \dot{Q}_c^{k=2}(82)}{95 - 82} \cdot \left(T_j - 82\right),$$

the space cooling capacity of the test unit at outdoor temperature T_j if operated at the Cooling Certified Air Volume Rate, Btu/h.

b. For units where indoor fan speed is the primary control variable, $FP_c^{k=1}$ denotes the fan speed used during the required A_1 and B_1 Tests (see section 3.2.2.1), $FP_c^{k=2}$ denotes the fan speed used during the required A_2 and B_2 Tests, and $FP_c(T_j)$ denotes the fan speed used by the unit when the outdoor temperature equals T_j. For units where indoor air volume rate is the primary control variable, the three FP_c's are similarly defined only now being expressed in terms of air volume rates rather than fan speeds. Refer to sections 3.2.2.1, 3.1.4 to 3.1.4.2, and 3.3 regarding the definitions and calculations of $\dot{Q}_c^{k=1}(82)$, $\dot{Q}_c^{k=1}(95)$, $\dot{Q}_c^{k=2}(82)$, and $\dot{Q}_c^{k=2}(95)$.

Calculate $e_c(T_j)/N$ in Equation 4.1–1 using,

$$\frac{e_c\left(T_j\right)}{N} = \frac{X\left(T_j\right) \cdot \dot{E}_c\left(T_j\right)}{PLF_j} \cdot \frac{n_j}{N} \qquad (4.1.2\text{-}3)$$

where,

$PLF_j = 1 - C_D^c \cdot [1 - X(T_j)]$, the part load factor, dimensionless.

$\dot{E}_c(T_j)$ = the electrical power consumption of the test unit when operating at outdoor temperature T_j, W.

c. The quantities $X(T_j)$ and n_j/N are the same quantities as used in Equation 4.1.2–1. If the optional tests described in section 3.2.2.1 and Table 4 are not conducted, set the cooling mode cyclic degradation coefficient, C_D^c, to the default value specified in section 3.5.3. If these optional tests are conducted, set C_D^c to the lower of:

1. The value calculated as per section 3.5.3; or

2.The section 3.5.3 default value of 0.25.

d. Evaluate $\dot{E}_c(T_j)$ using,

$$\dot{E}_c\left(T_j\right) = \dot{E}_c^{k=1}\left(T_j\right) + \frac{\dot{E}_c^{k=2}\left(T_j\right) - \dot{E}_c^{k=1}\left(T_j\right)}{FP_c^{k=2} - FP_c^{k=1}} \cdot \left[FP_c\left(T_j\right) - FP_c^{k=1}\right] \qquad (4.1.2\text{-}4)$$

where

$$\dot{E}_c^{k=1}\left(T_j\right) = \dot{E}_c^{k=1}(82) + \frac{\dot{E}_c^{k=1}(95) - \dot{E}_c^{k=1}(82)}{95 - 82} \cdot \left(T_j - 82\right),$$

the electrical power consumption of the test unit at outdoor temperature T_j if operated at the Cooling Minimum Air Volume Rate, W.

$$\dot{E}_c^{k=2}\left(T_j\right) = \dot{E}_c^{k=2}(82) + \frac{\dot{E}_c^{k=2}(95) - \dot{E}_c^{k=2}(82)}{95 - 82} \cdot \left(T_j - 82\right),$$

the electrical power consumption of the test unit at outdoor temperature T_j if operated at the Cooling Certified Air Volume Rate, W.

e. The parameters $FP_c^{k=1}$, and $FP_c^{k=2}$, and $FP_c(T_j)$ are the same quantities that are used when evaluating Equation 4.1.2–2. Refer to sections 3.2.2.1, 3.1.4 to 3.1.4.2, and 3.3 regarding the definitions and calculations of $\dot{E}_c^{k=1}(82)$, $\dot{E}_c^{k=1}(95)$, $\dot{E}_c^{k=2}(82)$, and $\dot{E}_c^{k=2}(95)$.

4.1.2.2 Units covered by section 3.2.2.2 where indoor fan capacity modulation is used to adjust the sensible to total cooling capacity ratio. Calculate SEER as specified in section 4.1.1.

4.1.3 SEER calculations for an air conditioner or heat pump having a two-capacity compressor. Calculate SEER using Equation 4.1–1. Evaluate the space cooling capacity, $\dot{Q}_c^{k=1}(T_j)$, and electrical power consumption, $\dot{E}_c^{k=1}(T_j)$, of the test unit when operating at low compressor capacity and outdoor temperature T_j using,

$$\dot{Q}_c^{k=1}\left(T_j\right) = \dot{Q}_c^{k=1}(82) + \frac{\dot{Q}_c^{k=1}(95) - \dot{Q}_c^{k=1}(82)}{95 - 82} \cdot \left(T_j - 82\right) \qquad (4.1.3\text{-}1)$$

$$\dot{E}_c^{k=1}\left(T_j\right) = \dot{E}_c^{k=1}(82) + \frac{\dot{E}_c^{k=1}(95) - \dot{E}_c^{k=1}(82)}{95 - 82} \cdot \left(T_j - 82\right) \qquad (4.1.3\text{-}2)$$

where $\dot{Q}_c^{k=1}(95)$ and $\dot{E}_c^{k=1}(95)$ are determined from the A_1 Test, $\dot{Q}_c^{k=1}(82)$ and $\dot{E}_c^{k=1}(82)$ are determined from the B_1 Test, and all are calculated as specified in section 3.3. For two-capacity units that lock out low capacity operation at outdoor temperatures less than 95 °F (but greater than 82 °F), use Equations 4.1.4–1 and 4.1.4–2 rather than Equations 4.1.3–1 and 4.1.3–2 for estimating performance at low compressor capacity. Evaluate the space cooling capacity, $\dot{Q}_c^{k=2}(T_j)$, and electrical power consumption, $\dot{E}_c^{k=2}(T_j)$, of the test unit when operating at high compressor capacity and outdoor temperature T_j using,

$$\dot{Q}_c^{k=2}\left(T_j\right) = \dot{Q}_c^{k=2}(82) + \frac{\dot{Q}_c^{k=2}(95) - \dot{Q}_c^{k=2}(82)}{95 - 82} \cdot \left(T_j - 82\right) \qquad (4.1.3\text{-}3)$$

$$\dot{E}_c^{k=2}\left(T_j\right) = \dot{E}_c^{k=2}(82) + \frac{\dot{E}_c^{k=2}(95) - \dot{E}_c^{k=2}(82)}{95 - 82} \cdot \left(T_j - 82\right) \qquad (4.1.3\text{-}4)$$

where $\dot{Q}_c^{k=2}(95)$ and $\dot{E}_c^{k=2}(95)$ are determined from the A_2 Test, $\dot{Q}_c^{k=2}(82)$, and $\dot{E}_c^{k=2}(82)$, are determined from the B_2 Test, and all are calculated as specified in section 3.3.

The calculation of Equation 4.1–1 quantities $q_c(T_j)/N$ and $e_c(T_j)/N$ differs depending on whether the test unit would operate at low capacity (section 4.1.3.1), cycle between low and high capacity (section 4.1.3.2), or operate at high capacity (sections 4.1.3.3 and 4.1.3.4) in responding to the building load. For units that lock out low capacity operation at higher outdoor temperatures, the manufacturer must supply information regarding this temperature so that the appropriate equations are used. Use Equation 4.1–2 to calculate the building load, $BL(T_j)$, for each temperature bin.

4.1.3.1 Steady-state space cooling capacity at low compressor capacity is greater than or equal to the building cooling load at temperature T_j, $\dot{Q}_c^{k=1}(T_j) \geq BL(T_j)$.

$$\frac{q_c\left(T_j\right)}{N} = X^{k=1}\left(T_j\right) \cdot \dot{Q}_c^{k=1}\left(T_j\right) \cdot \frac{n_j}{N}$$

$$\frac{e_c\left(T_j\right)}{N} = \frac{X^{k=1}\left(T_j\right) \cdot \dot{E}_c^{k=1}\left(T_j\right)}{PLF_j} \cdot \frac{n_j}{N}$$

where,

$X^{k=1}(T_j) = BL(T_j)/\dot{Q}_c^{k=1}(T_j)$, the cooling mode low capacity load factor for temperature bin j, dimensionless.

$PLF_j = 1 - C_D^c \cdot [1 - X^{k=1}(T_j)]$, the part load factor, dimensionless.

$$\frac{n_j}{N} =$$

fractional bin hours for the cooling season; the ratio of the number of hours during the

cooling season when the outdoor temperature fell within the range represented by bin temperature T_j to the total number of hours in the cooling season, dimensionless.

Obtain the fractional bin hours for the cooling season, n_j/N, from Table 16. Use Equations 4.1.3–1 and 4.1.3–2, respectively, to evaluate $\dot{Q}_c^{k=1}(T_j)$ and $\dot{E}_c^{k=1}(T_j)$. If the optional tests described in section 3.2.3 and Table 5 are not conducted, set the cooling mode cyclic degradation coefficient, C_D^c, to the default value specified in section 3.5.3. If these optional tests are conducted, set C_D^c to the lower of:

a. The value calculated according to section 3.5.3; or

b. The section 3.5.3 default value of 0.25.

TABLE 16—DISTRIBUTION OF FRACTIONAL HOURS WITHIN COOLING SEASON TEMPERATURE BINS

Bin number, j	Bin temperature range °F	Representative temperature for bin °F	Fraction of of total temperature bin hours, n_j/N
1	65–69	67	0.214
2	70–74	72	0.231
3	75–79	77	0.216
4	80–84	82	0.161
5	85–89	87	0.104
6	90–94	92	0.052
7	95–99	97	0.018
8	100–104	102	0.004

4.1.3.2 Unit alternates between high (k=2) and low (k=1) compressor capacity to satisfy the building cooling load at temperature T_j, $\dot{Q}_c^{k=1}(T_j) < BL(T_j) < \dot{Q}_c^{k=2}(T_j)$.

$$\frac{q_c(T_j)}{N} = \left[X^{k=1}(T_j)\cdot\dot{Q}_c^{k=1}(T_j) + X^{k=2}(T_j)\cdot\dot{Q}_c^{k=2}(T_j)\right]\cdot\frac{n_j}{N}$$

$$\frac{e_c(T_j)}{N} = \left[X^{k=1}(T_j)\cdot\dot{E}_c^{k=1}(T_j) + X^{k=2}(T_j)\cdot\dot{E}_c^{k=2}(T_j)\right]\cdot\frac{n_j}{N}$$

where,

$$X^{k=1}(T_j) = \frac{\dot{Q}_c^{k=2}(T_j) - BL(T_j)}{\dot{Q}_c^{k=2}(T_j) - \dot{Q}_c^{k=1}(T_j)},$$

the cooling mode, low capacity load factor for temperature bin j, dimensionless.

$X^{k=2}(T_j) = 1 - X^{k=1}(T_j)$, the cooling mode, high capacity load factor for temperature bin j, dimensionless.

Obtain the fractional bin hours for the cooling season, n_j/N, from Table 16. Use Equations 4.1.3–1 and 4.1.3–2, respectively, to evaluate $\dot{Q}_c^{k=1}(T_j)$ and $\dot{E}_c^{k=1}(T_j)$. Use Equations 4.1.3–3 and 4.1.3–4, respectively, to evaluate $\dot{Q}_c^{k=2}(T_j)$ and $\dot{E}_c^{k=2}(T_j)$.

4.1.3.3 Unit only operates at high (k=2) compressor capacity at temperature T_j and its capacity is greater than the building cooling load, $BL(T_j) < \dot{Q}_c^{k=2}(T_j)$. This section applies to units that lock out low compressor capacity operation at higher outdoor temperatures.

$$\frac{q_c(T_j)}{N} = X^{k=2}(T_j)\cdot\dot{Q}_c^{k=2}(T_j)\cdot\frac{n_j}{N}$$

$$\frac{e_c(T_j)}{N} = \frac{X^{k=2}(T_j)\cdot\dot{E}_c^{k=2}(T_j)}{PLF_j}\cdot\frac{n_j}{N}$$

where,

$X^{k=2}(T_j) = BL(T_j)/\dot{Q}_c^{k=2}(T_j)$, the cooling mode high capacity load factor for temperature bin j, dimensionless.

$PLF_j = 1 - C_D^c \cdot [1 - X^{k=2}(T_j)]$, the part load factor, dimensionless.

Obtain the fractional bin hours for the cooling season, n_j/N, from Table 16. Use Equations 4.1.3–3 and 4.1.3–4, respectively, to evaluate $\dot{Q}_c^{k=2}(T_j)$ and $\dot{E}_c^{k=2}(T_j)$. When evaluating the above equation for part load factor at high capacity, use the same value of C_D^c as used in the section 4.1.3.1 calculations.

4.1.3.4 Unit must operate continuously at high (k=2) compressor capacity at temperature T_j, $BL(T_j) \geq \dot{Q}_c^{k=2}(T_j)$.

$$\frac{q_c(T_j)}{N} = \dot{Q}_c^{k=2}(T_j) \cdot \frac{n_j}{N}$$

$$\frac{e_c(T_j)}{N} = \dot{E}_c^{k=2}(T_j) \cdot \frac{n_j}{N}.$$

Obtain the fractional bin hours for the cooling season, n_j/N, from Table 16. Use Equations 4.1.3–3 and 4.1.3–4, respectively, to evaluate $\dot{Q}_c^{k=2}(T_j)$ and $\dot{E}_c^{k=2}(T_j)$.

4.1.4 SEER calculations for an air conditioner or heat pump having a variable-speed compressor. Calculate SEER using Equation 4.1–1. Evaluate the space cooling capacity, $\dot{Q}_c^{k=1}(T_j)$, and electrical power consumption, $\dot{E}_c^{k=1}(T_j)$, of the test unit when operating at minimum compressor speed and outdoor temperature T_j. Use,

$$\dot{Q}_c^{k=1}(T_j) = \dot{Q}_c^{k=1}(67) + \frac{\dot{Q}_c^{k=1}(82) - \dot{Q}_c^{k=1}(67)}{82-67} \cdot (T_j - 67) \qquad (4.1.4\text{-}1)$$

$$\dot{E}_c^{k=1}(T_j) = \dot{E}_c^{k=1}(67) + \frac{\dot{E}_c^{k=1}(82) - \dot{E}_c^{k=1}(67)}{82-67} \cdot (T_j - 67) \qquad (4.1.4\text{-}2)$$

where $\dot{Q}_c^{k=1}(82)$ and $\dot{E}_c^{k=1}(82)$ are determined from the B_1 Test, $\dot{Q}_c^{k=1}(67)$ and $\dot{E}_c^{k=1}(67)$ are determined from the F1 Test, and all four quantities are calculated as specified in section 3.3. Evaluate the space cooling capacity, $\dot{Q}_c^{k=2}(T_j)$, and electrical power consumption, $\dot{E}_c^{k=2}(T_j)$, of the test unit when operating at maximum compressor speed and outdoor temperature T_j. Use Equations 4.1.3–3 and 4.1.3–4, respectively, where $\dot{Q}_c^{k=2}(95)$ and $\dot{E}_c^{k=2}(95)$ are determined from the A_2 Test, $\dot{Q}_c^{k=2}(82)$ and $\dot{E}_c^{k=2}(82)$ are determined from the B_2 Test, and all four quantities are calculated as specified in section 3.3. Calculate the space cooling capacity, $\dot{Q}_c^{k=v}(T_j)$, and electrical power consumption, $\dot{E}_c^{k=v}(T_j)$, of the test unit when operating at outdoor temperature T_j and the intermediate compressor speed used during the section 3.2.4 (and Table 6) E_V Test using,

$$\dot{Q}_c^{k=v}(T_j) = \dot{Q}_c^{k=v}(87) + M_Q \cdot (T_j - 87) \qquad (4.1.4\text{-}3)$$

$$\dot{E}_c^{k=v}(T_j) = \dot{E}_c^{k=v}(87) + M_E \cdot (T_j - 87) \qquad (4.1.4\text{-}4)$$

where $\dot{Q}_c^{k=v}(87)$ and $\dot{E}_c^{k=v}(87)$ are determined from the E_V Test and calculated as specified in section 3.3. Approximate the slopes of the k = v intermediate speed cooling capacity and electrical power input curves, M_Q and M_E, as follows:

$$M_Q = \left[\frac{\dot{Q}_c^{k=1}(82) - \dot{Q}_c^{k=1}(67)}{82-67} \cdot (1 - N_Q)\right] + \left[N_Q \cdot \frac{\dot{Q}_c^{k=2}(95) - \dot{Q}_c^{k=2}(82)}{95-82}\right]$$

$$M_E = \left[\frac{\dot{E}_c^{k=1}(82) - \dot{E}_c^{k=1}(67)}{82-67} \cdot (1 - N_E)\right] + \left[N_E \cdot \frac{\dot{E}_c^{k=2}(95) - \dot{E}_c^{k=2}(82)}{95-82}\right]$$

where,

$$N_Q = \frac{\dot{Q}_c^{k=v}(87) - \dot{Q}_c^{k=1}(87)}{\dot{Q}_c^{k=2}(87) - \dot{Q}_c^{k=1}(87)}, \text{ and}$$

$$N_E = \frac{\dot{E}_c^{k=v}(87) - \dot{E}_c^{k=1}(87)}{\dot{E}_c^{k=2}(87) - \dot{E}_c^{k=1}(87)}.$$

Calculating Equation 4.1–1 quantities

$$\frac{q_c(T_j)}{N} \text{ and } \frac{e_c(T_j)}{N}$$

differs depending upon whether the test unit would operate at minimum speed (section 4.1.4.1), operate at an intermediate speed (section 4.1.4.2), or operate at maximum speed (section 4.1.4.3) in responding to the building load. Use Equation 4.1–2 to calculate the building load, $BL(T_j)$, for each temperature bin.

4.1.4.1 Steady-state space cooling capacity when operating at minimum compressor speed is greater than or equal to the building cooling load at temperature T_j, $\dot{Q}_c^{k=1}(T_j) \geq BL(T_j)$.

$$\frac{q_c(T_j)}{N} = X^{k=1}(T_j) \cdot \dot{Q}_c^{k=1}(T_j) \cdot \frac{n_j}{N}$$

$$\frac{e_c(T_j)}{N} = \frac{X^{k=1}(T_j) \cdot \dot{E}_c^{k=1}(T_j)}{PLF_J} \cdot \frac{n_j}{N}$$

where,

$X^{k=1}(T_j) = BL(T_j) / \dot{Q}_c^{k=1}(T_j)$, the cooling mode minimum speed load factor for temperature bin j, dimensionless.

$PLF_j = 1 - C_D^c \cdot [1 - X^{k=1}(T_j)]$, the part load factor, dimensionless.

n_j/N = fractional bin hours for the cooling season; the ratio of the number of hours during the cooling season when the outdoor temperature fell within the range represented by bin temperature T_j to the total number of hours in the cooling season, dimensionless.

Obtain the fractional bin hours for the cooling season, n_j/N, from Table 16. Use Equations 4.1.4–1 and 4.1.4–2, respectively, to evaluate $\dot{Q}_c^{k=1}(T_j)$ and $\dot{E}_c^{k=1}(T_j)$. If the optional tests described in section 3.2.4 and Table 6 are not conducted, set the cooling mode cyclic degradation coefficient, C_D^c, to the default value specified in section 3.5.3. If these optional tests are conducted, set C_D^c to the lower of:

a. The value calculated according to section 3.5.3; or

b. The section 3.5.3 default value of 0.25.

4.1.4.2 Unit operates at an intermediate compressor speed (k=i) in order to match the building cooling load at temperature T_j, $\dot{Q}_c^{k=1}(T_j) < BL(T_j) < \dot{Q}_c^{k=2}(T_j)$.

$$\frac{q_c(T_j)}{N} = \dot{Q}_c^{k=i}(T_j) \cdot \frac{n_j}{N}$$

$$\frac{e_c(T_j)}{N} = \dot{E}_c^{k=i}(T_j) \cdot \frac{n_j}{N}$$

where,

$\dot{Q}_c^{k=i}(T_j) = BL(T_j)$, the space cooling capacity delivered by the unit in matching the building load at temperature T_j, Btu/h. The matching occurs with the unit operating at compressor speed k = i.

$$\dot{E}_c^{k=i}(T_j) = \frac{\dot{Q}_c^{k=i}(T_j)}{EER^{k=i}(T_j)},$$

the electrical power input required by the test unit when operating at a compressor speed of k = i and temperature T_j, W.

$EER^{k=i}(T_j)$ = the steady-state energy efficiency ratio of the test unit when operating at a compressor speed of k = i and temperature T_j, Btu/h per W.

Obtain the fractional bin hours for the cooling season, n_j/N, from Table 16. For each temperature bin where the unit operates at an intermediate compressor speed, determine the energy efficiency ratio $EER^{k=i}(T_j)$ using,

$EER^{k=i}(T_j) = A + B \cdot T_j + C \cdot T_j^2$.

For each unit, determine the coefficients A, B, and C by conducting the following calculations once:

$$D = \frac{T_2^2 - T_1^2}{T_v^2 - T_1^2}$$

$$B = \frac{EER^{k=1}(T_1) - EER^{k=2}(T_2) - D \cdot \left[EER^{k=1}(T_1) - EER^{k=v}(T_v)\right]}{T_1 - T_2 - D \cdot (T_1 - T_v)}$$

$$C = \frac{EER^{k=1}(T_1) - EER^{k=2}(T_2) - B \cdot (T_1 - T_2)}{T_1^2 - T_2^2}$$

$$A = EER^{k=2}(T_2) - B \cdot T_2 - C \cdot T_2^2$$

where,

T_1 = the outdoor temperature at which the unit, when operating at minimum compressor speed, provides a space cooling capacity that is equal to the building load ($\dot{Q}_c^{k=1}(T_1) = BL(T_1)$), °F. Determine T_1 by equating Equations 4.1.4–1 and 4.1–2 and solving for outdoor temperature.

T_v = the outdoor temperature at which the unit, when operating at the intermediate compressor speed used during the section 3.2.4 E_V Test, provides a space cooling capacity that is equal to the building load ($\dot{Q}_c^{k=v}(T_v) = BL(T_v)$), °F. Determine T_v by equating Equations 4.1.4–3 and 4.1–2 and solving for outdoor temperature.

T_2 = the outdoor temperature at which the unit, when operating at maximum compressor speed, provides a space cooling capacity that is equal to the building load ($\dot{Q}_c^{k=2}(T_2) = BL(T_2)$), °F. Determine T_2 by equating Equations 4.1.3–3 and 4.1–2 and solving for outdoor temperature.

$$EER^{k=1}(T_1) = \frac{\dot{Q}_c^{k=1}(T_1)\left[\text{Eqn. 4.1.4-1, substituting } T_1 \text{ for } T_j\right]}{\dot{E}_c^{k=1}(T_1)\left[\text{Eqn. 4.1.4-2, substituting } T_1 \text{ for } T_j\right]}, \text{ Btu/h per W.}$$

$$EER^{k=v}(T_v) = \frac{\dot{Q}_c^{k=v}(T_v)\left[\text{Eqn. 4.1.4-3, substituting } T_v \text{ for } T_j\right]}{\dot{E}_c^{k=v}(T_v)\left[\text{Eqn. 4.1.4-4, substituting } T_v \text{ for } T_j\right]}, \text{ Btu/h per W.}$$

$$EER^{k=2}(T_2) = \frac{\dot{Q}_c^{k=2}(T_2)\left[\text{Eqn. 4.1.3-3, substituting } T_2 \text{ for } T_j\right]}{\dot{E}_c^{k=2}(T_2)\left[\text{Eqn. 4.1.3-4, substituting } T_2 \text{ for } T_j\right]}, \text{ Btu/h per W.}$$

4.1.4.3 Unit must operate continuously at maximum (k=2) compressor speed at temperature Tj, $BL(T_j) \geq \dot{Q}_c^{k=2}(T_j)$. Evaluate the Equation 4.1–1 quantities

$$\frac{q_c(T_j)}{N} \text{ and } \frac{e_c(T_j)}{N}$$

as specified in section 4.1.3.4 with the understanding that $\dot{Q}_c^{k=2}(T_j)$ and $\dot{E}_c^{k=2}(T_j)$ correspond to maximum compressor speed operation and are derived from the results of the tests specified in section 3.2.4.

4.2 Heating Seasonal Performance Factor (HSPF) Calculations. Unless an approved alternative rating method is used, as set forth in 10 CFR 430.24(m), Subpart B, HSPF must be calculated as follows: Six generalized climatic regions are depicted in Figure 2 and otherwise defined in Table 17. For each of these regions and for each applicable standardized design heating requirement, evaluate the heating seasonal performance factor using,

$$HSPF = \frac{\sum_{j}^{J} n_j \cdot BL(T_j)}{\sum_{j}^{J} e_h(T_j) + \sum_{j}^{J} RH(T_j)} \cdot F_{def} = \frac{\sum_{j}^{J} \left[\frac{n_j}{N} \cdot BL(T_j) \right]}{\sum_{j}^{J} \frac{e_h(T_j)}{N} + \sum_{j}^{J} \frac{RH(T_j)}{N}} \cdot F_{def} \qquad (4.2\text{-}1)$$

where,

$e_h(T_j)/N$=

The ratio of the electrical energy consumed by the heat pump during periods of the space heating season when the outdoor temperature fell within the range represented by bin temperature T_j to the total number of hours in the heating season (N), W. For heat pumps having a heat comfort controller, this ratio may also include electrical energy used by resistive elements to maintain a minimum air delivery temperature (see 4.2.5).

$RH(T_j)/N$=

The ratio of the electrical energy used for resistive space heating during periods when the outdoor temperature fell within the range represented by bin temperature T_j to the total number of hours in the heating season (N), W. Except as noted in section 4.2.5, resistive space heating is modeled as being used to meet that portion of the building load that the heat pump does not meet because of insufficient capacity or because the heat pump automatically turns off at the lowest outdoor temperatures. For heat pumps having a heat comfort controller, all or part of the electrical energy used by resistive heaters at a particular bin temperature may be reflected in $e_h(T_j)/N$ (see 4.2.5).

T_j = the outdoor bin temperature, °F. Outdoor temperatures are ''binned'' such that calculations are only performed based one temperature within the bin. Bins of 5 °F are used.

n_j/N=

Fractional bin hours for the heating season; the ratio of the number of hours during the heating season when the outdoor temperature fell within the range represented by bin temperature T_j to the total number of hours in the heating season, dimensionless. Obtain n_j/N values from Table 17.

j = the bin number, dimensionless.

J = for each generalized climatic region, the total number of temperature bins, dimensionless. Referring to Table 17, J is the highest bin number (j) having a nonzero entry for the fractional bin hours for the generalized climatic region of interest.

F_{def} = the demand defrost credit described in section 3.9.2, dimensionless.

$BL(T_j)$ = the building space conditioning load corresponding to an outdoor temperature of T_j; the heating season building load also depends on the generalized climatic region's outdoor design temperature and the design heating requirement, Btu/h.

TABLE 17—GENERALIZED CLIMATIC REGION INFORMATION

Region Number		I	II	III	IV	V	VI
Heating Load Hours, HLH		750	1250	1750	2250	2750	*2750
Outdoor Design Temperature, T_{OD}		37	27	17	5	−10	30
j	T_j (°F)	Fractional Bin Hours, n_j/N					
1	62	.291	.215	.153	.132	.106	.113
2	57	.239	.189	.142	.111	.092	.206
3	52	.194	.163	.138	.103	.086	.215
4	47	.129	.143	.137	.093	.076	.204
5	42	.081	.112	.135	.100	.078	.141
6	37	.041	.088	.118	.109	.087	.076
7	32	.019	.056	.092	.126	.102	.034
8	27	.005	.024	.047	.087	.094	.008
9	22	.001	.008	.021	.055	.074	.003
10	17	0	.002	.009	.036	.055	0
11	12	0	0	.005	.026	.047	0
12	7	0	0	.002	.013	.038	0

TABLE 17—GENERALIZED CLIMATIC REGION INFORMATION—Continued

13	2	0	0	.001	.006	.029	0
14	−3	0	0	0	.002	.018	0
15	−8	0	0	0	.001	.010	0
16	−13	0	0	0	0	.005	0
17	−18	0	0	0	0	.002	0
18	−23	0	0	0	0	.001	0

*Pacific Coast Region.

Evaluate the building heating load using

$$BL(T_j) = \frac{(65 - T_j)}{65 - T_{OD}} \cdot C \cdot DHR \qquad (4.2\text{-}2)$$

where,

T_{OD} = the outdoor design temperature, °F. An outdoor design temperature is specified for each generalized climatic region in Table 17.

C = 0.77, a correction factor which tends to improve the agreement between calculated and measured building loads, dimensionless.

DHR = the design heating requirement (see Definition 1.22), Btu/h.

Calculate the minimum and maximum design heating requirements for each generalized climatic region as follows:

$$DHR_{min} = \left\{ \begin{array}{ll} \dot{Q}_h^k(47) \cdot \left[\frac{65 - T_{OD}}{60}\right], & \text{for Regions I, II, III, IV, \& VI} \\ \dot{Q}_h^k(47), & \text{for Region V} \end{array} \right\} \text{Rounded to the nearest standardized DHR given in Table 18.}$$

and

$$DHR_{max} = \left\{ \begin{array}{ll} 2 \cdot \dot{Q}_h^k(47) \cdot \left[\frac{65 - T_{OD}}{60}\right], & \text{for Regions I, II, III, IV, \& VI} \\ 2.2 \cdot \dot{Q}_h^k(47), & \text{for Region V} \end{array} \right\} \text{Rounded to the nearest standardized DHR given in Table 18.}$$

where $\dot{Q}_h^k(47)$ is expressed in units of Btu/h and otherwise defined as follows:

1. For a single-speed heat pump tested as per section 3.6.1, $\dot{Q}_h^k(47) = \dot{Q}_h(47)$, the space heating capacity determined from the H1 Test.

2. For a variable-speed heat pump, a section 3.6.2 single-speed heat pump, or a two-capacity heat pump not covered by item 3, $\dot{Q}_h^k(47) = \dot{Q}_h^{k=2}(47)$, the space heating capacity determined from the $H1_2$ Test.

3. For two-capacity, northern heat pumps (see Definition 1.46), $\dot{Q}^k_h(47) = \dot{Q}^{k=1}_h(47)$, the space heating capacity determined from the $H1_1$ Test.

If the optional $H1_N$ Test is conducted on a variable-speed heat pump, the manufacturer has the option of defining $\dot{Q}^k_h(47)$ as specified above in item 2 or as $\dot{Q}^k_h(47)=\dot{Q}^{k=N}_h(47)$, the space heating capacity determined from the $H1_N$ Test.

For all heat pumps, HSPF accounts for the heating delivered and the energy consumed by auxiliary resistive elements when operating below the balance point. This condition occurs when the building load exceeds the space heating capacity of the heat pump condenser. For HSPF calculations for all heat pumps, see either section 4.2.1, 4.2.2, 4.2.3, or 4.2.4, whichever applies.

For heat pumps with heat comfort controllers (see Definition 1.28), HSPF also accounts for resistive heating contributed when operating above the heat-pump-plus-comfort-controller balance point as a result of maintaining a minimum supply temperature. For heat pumps having a heat comfort controller, see section 4.2.5 for the additional steps required for calculating the HSPF.

TABLE 18—STANDARDIZED DESIGN HEATING REQUIREMENTS (BTU/H)

5,000	25,000	50,000	90,000
10,000 ...	30,000	60,000	100,000
15,000 ...	35,000	70,000	110,000
20,000 ...	40,000	80,000	130,000

4.2.1 Additional steps for calculating the HSPF of a heat pump having a single-speed compressor that was tested with a fixed-speed indoor fan installed, a constant-air-volume-rate indoor fan installed, or with no indoor fan installed.

$$\frac{e_h(T_j)}{N} = \frac{X(T_j)\cdot \dot{E}_h(T_j)\cdot \delta(T_j)}{PLF_j}\cdot\frac{n_j}{N} \qquad (4.2.1\text{-}1)$$

$$\frac{RH(T_j)}{N} = \frac{BL(T_j)-\left[X(T_j)\cdot \dot{Q}_h(T_j)\cdot \delta(T_j)\right]}{3.413\,\frac{Btu/h}{W}}\cdot\frac{n_j}{N} \qquad (4.2.1\text{-}2)$$

where,

$$X(T_j) = \begin{Bmatrix} BL(T_J)/\dot{Q}_h(T_j) \\ \text{or} \\ 1 \end{Bmatrix}$$

whichever is less; the heating mode load factor for temperature bin j, dimensionless.

$\dot{Q}_h(T_j)$ = the space heating capacity of the heat pump when operating at outdoor temperature T_j, Btu/h.

$\dot{E}_h(T_j)$ = the electrical power consumption of the heat pump when operating at outdoor temperature T_j, W.

$\delta(T_j)$ = the heat pump low temperature cut-out factor, dimensionless.

$PLF_j = 1 - C_D^h \cdot [1 - X(T_j)]$ the part load factor, dimensionless.

Use Equation 4.2–2 to determine $BL(T_j)$. Obtain fractional bin hours for the heating season, n_j/N, from Table 17. If the optional H1C Test described in section 3.6.1 is not conducted, set the heating mode cyclic degradation coefficient, C_D^h, to the default value specified in section 3.8.1. If this optional test is conducted, set C_D^h to the lower of:

a. The value calculated according to section 3.8.1 or

b. The section 3.8.1 default value of 0.25.

Determine the low temperature cut-out factor using

$$\delta(T_j) = \begin{cases} 0, \text{ if } T_j \le T_{off} \text{ or } \dfrac{\dot{Q}_h(T_j)}{3.413 \cdot \dot{E}_h(T_j)} < 1 \\ 1/2, \text{ if } T_{off} < T_j \le T_{on} \text{ and } \dfrac{\dot{Q}_h(T_j)}{3.413 \cdot \dot{E}_h(T_j)} \ge 1 \\ 1, \text{ if } T_j > T_{on} \text{ and } \dfrac{\dot{Q}_h(T_j)}{3.413 \cdot \dot{E}_h(T_j)} \ge 1 \end{cases} \qquad (4.2.1\text{-}3)$$

where,

T_{off} = the outdoor temperature when the compressor is automatically shut off, °F. (If no such temperature exists, T_j is always greater than T_{off} and T_{on}).

T_{on} = the outdoor temperature when the compressor is automatically turned back on, if applicable, following an automatic shut-off, °F.

Calculate $\dot{Q}_h(T_j)$ and $\dot{E}_h(T_j)$ using,

$$\dot{Q}_h(T_j) = \begin{cases} \dot{Q}_h(17) + \dfrac{\left[\dot{Q}_h(47) - \dot{Q}_h(17)\right] \cdot (T_j - 17)}{47 - 17}, \text{ if } T_j \ge 45\ °F \text{ or } T_j \le 17\ °F \\ \dot{Q}_h(17) + \dfrac{\left[\dot{Q}_h(35) - \dot{Q}_h(17)\right] \cdot (T_j - 17)}{35 - 17}, \text{ if } 17\ °F < T_j < 45\ °F \end{cases} \qquad (4.2.1\text{-}4)$$

$$\dot{E}_h(T_j) = \begin{cases} \dot{E}_h(17) + \dfrac{\left[\dot{E}_h(47) - \dot{E}_h(17)\right] \cdot (T_j - 17)}{47 - 17}, \text{ if } T_j \ge 45\ °F \text{ or } T_j \le 17\ °F \\ \dot{E}_h(17) + \dfrac{\left[\dot{E}_h(35) - \dot{E}_h(17)\right] \cdot (T_j - 17)}{35 - 17}, \text{ if } 17\ °F < T_j < 45\ °F \end{cases} \qquad (4.2.1\text{-}5)$$

where $\dot{Q}_h(47)$ and $\dot{E}_h(47)$ are determined from the H1 Test and calculated as specified in section 3.7; $\dot{Q}_h(35)$ and $\dot{E}_h(35)$ are determined from the H2 Test and calculated as specified in section 3.9.1; and $\dot{Q}_h(17)$ and $\dot{E}_h(17)$ are determined from the H3 Test and calculated as specified in section 3.10.

4.2.2 Additional steps for calculating the HSPF of a heat pump having a single-speed compressor and a variable-speed, variable-air-volume-rate indoor fan. The manufacturer must provide information about how the indoor air volume rate or the indoor fan speed varies over the outdoor temperature range of 65 °F to −23 °F. Calculate the quantities

$$\frac{e_h(T_j)}{N} \text{ and } \frac{RH(T_j)}{N}$$

in Equation 4.2–1 as specified in section 4.2.1 with the exception of replacing references to the H1C Test and section 3.6.1 with the $H1C_1$ Test and section 3.6.2. In addition, evaluate the space heating capacity and electrical power consumption of the heat pump $\dot{Q}_h(T_j)$ and $\dot{E}_h(T_j)$ using

$$\dot{Q}_h\left(T_j\right) = \dot{Q}_h^{k=1}\left(T_j\right) + \frac{\dot{Q}_h^{k=2}\left(T_j\right) - \dot{Q}_h^{k=1}\left(T_j\right)}{FP_h^{k=2} - FP_h^{k=1}} \cdot \left[FP_h\left(T_j\right) - FP_h^{k=1}\right] \qquad (4.2.2\text{-}1)$$

$$\dot{E}_h\left(T_j\right) = \dot{E}_h^{k=1}\left(T_j\right) + \frac{\dot{E}_h^{k=2}\left(T_j\right) - \dot{E}_h^{k=1}\left(T_j\right)}{FP_h^{k=2} - FP_h^{k=1}} \cdot \left[FP_h\left(T_j\right) - FP_h^{k=1}\right] \qquad (4.2.2\text{-}2)$$

where the space heating capacity and electrical power consumption at both low capacity (k=1) and high capacity (k=2) at outdoor temperature Tj are determined using

$$\dot{Q}_h^k\left(T_j\right) = \begin{cases} \dot{Q}_h^k(17) + \dfrac{\left[\dot{Q}_h^k(47) - \dot{Q}_h^k(17)\right] \cdot \left(T_j - 17\right)}{47 - 17}, & \text{if } T_j \geq 45\ ^\circ\text{F or } T_j \leq 17\ ^\circ\text{F} \\ \dot{Q}_h^k(17) + \dfrac{\left[\dot{Q}_h^k(35) - \dot{Q}_h^k(17)\right] \cdot \left(T_j - 17\right)}{35 - 17}, & \text{if } 17\ ^\circ\text{F} < T_j < 45\ ^\circ\text{F} \end{cases} \qquad (4.2.2\text{-}3)$$

$$\dot{E}_h^k\left(T_j\right) = \begin{cases} E_h^k(17) + \dfrac{\left[\dot{E}_h^k(47) - \dot{E}_h^k(17)\right] \cdot \left(T_j - 17\right)}{47 - 17}, & \text{if } T_j \geq 45\ ^\circ\text{F or } T_j \leq 17\ ^\circ\text{F} \\ \dot{E}_h^k(17) + \dfrac{\left[\dot{E}_h^k(35) - \dot{E}_h^k(17)\right] \cdot \left(T_j - 17\right)}{35 - 17}, & \text{if } 17\ ^\circ\text{F} < T_j < 45\ ^\circ\text{F} \end{cases} \qquad (4.2.2\text{-}4)$$

For units where indoor fan speed is the primary control variable, $FP_h^{k=1}$ denotes the fan speed used during the required $H1_1$ and $H3_1$ Tests (see Table 10), $FP_h^{k=2}$ denotes the fan speed used during the required $H1_2$, $H2_2$, and $H3_2$ Tests, and $FP_h(T_j)$ denotes the fan speed used by the unit when the outdoor temperature equals T_j. For units where indoor air volume rate is the primary control variable, the three FP_h's are similarly defined only now being expressed in terms of air volume rates rather than fan speeds. Determine $\dot{Q}_h^{k=1}(47)$ and $\dot{E}_h^{k=1}(47)$ from the $H1_1$ Test, and $\dot{Q}_h^{k=2}(47)$ and $\dot{E}_h^{k=2}(47)$ from the $H1_2$ Test. Calculate all four quantities as specified in section 3.7. Determine $\dot{Q}_h^{k=1}(35)$ and $\dot{E}_h^{k=1}(35)$ as specified in section 3.6.2; determine $\dot{Q}_h^{k=2}(35)$ and $\dot{E}_h^{k=2}(35)$ and from the $H2_2$ Test and the calculation specified in section 3.9. Determine $\dot{Q}_h^{k=1}(17)$ and $\dot{E}_h^{k=1}$(17 from the $H3_1$ Test, and $\dot{Q}_h^{k=2}(17)$ and $\dot{E}_h^{k=2}(17)$ from the $H3_2$ Test. Calculate all four quantities as specified in section 3.10.

4.2.3 Additional steps for calculating the HSPF of a heat pump having a two-capacity compressor. The calculation of the Equation 4.2–1 quantities

$$\frac{e_h\left(T_j\right)}{N} \text{ and } \frac{RH\left(T_j\right)}{N}$$

differs depending upon whether the heat pump would operate at low capacity (section 4.2.3.1), cycle between low and high capacity (Section 4.2.3.2), or operate at high capacity (sections 4.2.3.3 and 4.2.3.4) in responding to the building load. For heat pumps that lock out low capacity operation at low outdoor temperatures, the manufacturer must supply information regarding the cutoff temperature(s) so that the appropriate equations can be selected.

a. Evaluate the space heating capacity and electrical power consumption of the heat pump when operating at low compressor capacity and outdoor temperature T_j using

$$\dot{Q}_h^{k=1}(T_j) = \begin{cases} \dot{Q}_h^{k=1}(47) + \dfrac{\left[\dot{Q}_h^{k=1}(62) - \dot{Q}_h^{k=1}(47)\right]\cdot(T_j - 47)}{62-47}, \text{if } T_j \geq 40\ °F \\ \dot{Q}_h^{k=1}(17) + \dfrac{\left[\dot{Q}_h^{k=1}(35) - \dot{Q}_h^{k=1}(17)\right]\cdot(T_j - 17)}{35-17}, \text{if } 17\ °F \leq T_j < 40\ °F \\ \dot{Q}_h^{k=1}(17) + \dfrac{\left[\dot{Q}_h^{k=1}(47) - \dot{Q}_h^{k=1}(17)\right]\cdot(T_j - 17)}{47-17}, \text{if } T_j < 17\ °F \end{cases}$$

$$\dot{E}_h^{k=1}(T_j) = \begin{cases} \dot{E}_h^{k=1}(47) + \dfrac{\left[\dot{E}_h^{k=1}(62) - \dot{E}_h^{k=1}(47)\right]\cdot(T_j - 47)}{62-47}, \text{ if } T_j \geq 40\ °F \\ \dot{E}_h^{k=1}(17) + \dfrac{\left[\dot{E}_h^{k=1}(35) - \dot{E}_h^{k=1}(17)\right]\cdot(T_j - 17)}{35-17}, \text{ if } 17\ °F \leq T_j < 40\ °F \\ \dot{E}_h^{k=1}(17) + \dfrac{\left[\dot{E}_h^{k=1}(47) - \dot{E}_h^{k=1}(17)\right]\cdot(T_j - 17)}{47-17}, \text{ if } T_j < 17\ °F \end{cases}$$

b. Evaluate the space heating capacity and electrical power consumption ($\dot{Q}_h^{k=2}(T_j)$ and $\dot{E}_h^{k=2}(T_j)$) of the heat pump when operating at high compressor capacity and outdoor temperature Tj by solving Equations 4.2.2–3 and 4.2.2–4, respectively, for k=2. Determine $\dot{Q}_h^{k=1}(62)$ and $\dot{E}_h^{k=1}(62)$ from the $H0_1$ Test, $\dot{Q}_h^{k=1}(47)$ and $\dot{E}_h^{k=1}(47)$ from the $H1_1$ Test, and $\dot{Q}_h^{k=2}(47)$ and $\dot{E}_h^{k=2}(47)$ from the $H1_2$ Test. Calculate all six quantities as specified in section 3.7. Determine $\dot{Q}_h^{k=2}(35)$ and $\dot{E}_h^{k=2}(35)$ from the $H2_2$ Test and, if required as described in section 3.6.3, determine $\dot{Q}_h^{k=1}(35)$ and $\dot{E}_h^{k=1}(35)$ from the $H2_1$ Test. Calculate the required 35 °F quantities as specified in section 3.9. Determine $\dot{Q}_h^{k=2}(17)$ and $\dot{E}_h^{k=2}(17)$ from the $H3_2$ Test and, if required as described in section 3.6.3, determine $\dot{Q}_h^{k=1}(17)$ and $\dot{E}_h^{k=1}(17)$ from the $H3_1$ Test. Calculate the required 17 °F quantities as specified in section 3.10.

4.2.3.1 Steady-state space heating capacity when operating at low compressor capacity is greater than or equal to the building heating load at temperature T_j, $\dot{Q}_h^{k=1}(T_j) \geq BL(T_j)$.

$$\frac{e_h(T_j)}{N} = \frac{X^{k=1}(T_j)\cdot\dot{E}_h^{k=1}(T_j)\cdot\delta'(T_j)}{PLF_j}\cdot\frac{n_j}{N} \qquad (4.2.3\text{-}1)$$

$$\frac{RH(T_j)}{N} = \frac{BL(T_j)\cdot\left[1-\delta'(T_j)\right]}{3.413\,\dfrac{Btu/h}{W}}\cdot\frac{n_j}{N} \qquad (4.2.3\text{-}2)$$

where,

$X^{k=1}(T_j) = BL(T_j) / \dot{Q}_h^{k=1}(T_j)$, the heating mode low capacity load factor for temperature bin *j*, dimensionless.

$PLF_j = 1 - C_D^h \cdot [\ 1 - X^{k=1}(T_j)\ ]$, the part load factor, dimensionless.

$\delta'(T_j)$ = the low temperature cutoff factor, dimensionless.

If the optional $H0C_1$ Test described in section 3.6.3 is not conducted, set the heating mode cyclic degradation coefficient, C_D^h, to the default value specified in section 3.8.1. If this optional test is conducted, set C_D^h to the lower of:

a. The value calculated according to section 3.8.1; or

b. The section 3.8.1 default value of 0.25.

Determine the low temperature cut-out factor using

$$\delta'\left(T_j\right) = \begin{cases} 0, & \text{if } T_j \le T_{off} \\ 1/2, & \text{if } T_{off} < T_j \le T_{on} \\ 1, & \text{if } T_j > T_{on} \end{cases} \qquad (4.2.3\text{-}3)$$

where T_{off} and T_{on} are defined in section 4.2.1. Use the calculations given in section 4.2.3.3, and not the above, if:

(a) The heat pump locks out low capacity operation at low outdoor temperatures and

(b) T_j is below this lockout threshold temperature.

4.2.3.2 Heat pump alternates between high (k=2) and low (k=1) compressor capacity to satisfy the building heating load at a temperature T_j, $\dot{Q}_h^{k=1}(T_j) < BL(T_j) < \dot{Q}_h^{k=2}(T_j)$. Calculate

$$\frac{RH\left(T_j\right)}{N}$$

using Equation 4.2.3–2. Evaluate

$$\frac{e_h\left(T_j\right)}{N}$$

using

$$\frac{e_h\left(T_j\right)}{N} = \left[X^{k=1}\left(T_j\right) \cdot \dot{E}_h^{k=1}\left(T_j\right) + X^{k=2}\left(T_j\right) \cdot \dot{E}_h^{k=2}\left(T_j\right)\right] \cdot \delta'\left(T_j\right) \cdot \frac{n_j}{N}$$

where,

$$X^{k=1}\left(T_j\right) = \frac{\dot{Q}_h^{k=2}\left(T_j\right) - BL\left(T_j\right)}{\dot{Q}_h^{k=2}\left(T_j\right) - \dot{Q}_h^{k=1}\left(T_j\right)}$$

$X^{k=2}(T_j) = 1 - X^{k=1}(T_j)$ the heating mode, high capacity load factor for temperature bin $_j$, dimensionless.

Determine the low temperature cut-out factor, $\delta'(T_j)$, using Equation 4.2.3–3.

4.2.3.3 Heat pump only operates at high (k=2) compressor capacity at temperature T_j and its capacity is greater than the building heating load, $BL(T_j) < \dot{Q}_h^{k=2}(T_j)$. This section applies to units that lock out low compressor capacity operation at low outdoor temperatures. Calculate

$$\frac{RH\left(T_j\right)}{N}$$

using Equation 4.2.3–2. Evaluate

$$\frac{e_h\left(T_j\right)}{N}$$

using

$$\frac{e_h\left(T_j\right)}{N} = \frac{X^{k=2}\left(T_j\right) \cdot \dot{E}_h^{k=2}\left(T_j\right) \cdot \delta'\left(T_j\right)}{PLF_j} \cdot \frac{n_j}{N}$$

where,

$X^{k=2}(T_j) = BL(T_j)/\dot{Q}_h^{k=2}(T_j)$.

$PLF_j = 1 - C_D^h\,[\,1 - X^{k=2}(T_j)\,]$.

When evaluating the above equation for part load factor at high capacity, use the same value of C_D^h as used in the section 4.2.3.1 calculations. Determine the low temperature cut-out factor, $\delta'(T_j)$, using Equation 4.2.3–3.

4.2.3.4 Heat pump must operate continuously at high (k=2) compressor capacity at temperature T_j, $BL(T_j) \ge \dot{Q}_h^{k=2}(T_j)$.

Where

$$\frac{e_h(T_j)}{N} = \dot{E}_h^{k=2}(T_j) \cdot \delta''(T_j) \cdot \frac{n_j}{N}$$

$$\frac{RH(T_j)}{N} = \frac{BL(T_j) - \left[\dot{Q}_h^{k=2}(T_j) \cdot \delta''(T_j)\right]}{3.413\ \frac{Btu/h}{W}} \cdot \frac{n_j}{N}$$

$$\delta''(T_j) = \begin{cases} 0, & \text{if } T_j \le T_{off} \text{ or } \dfrac{\dot{Q}_h^{k=2}(T_j)}{3.413 \cdot \dot{E}_h^{k=2}(T_j)} < 1 \\ 1/2, & \text{if } T_{off} < T_j \le T_{on} \text{ and } \dfrac{\dot{Q}_h^{k=2}(T_j)}{3.413 \cdot \dot{E}_h^{k=2}(T_j)} \ge 1 \\ 1, & \text{if } T_j > T_{on} \text{ and } \dfrac{\dot{Q}_h^{k=2}(T_j)}{3.413 \cdot \dot{E}_h^{k=2}(T_j)} \ge 1 \end{cases}$$

4.2.4 Additional steps for calculating the HSPF of a heat pump having a variable-speed compressor. Calculate HSPF using Equation 4.2–1. Evaluate the space heating capacity, $\dot{Q}_h^{k=1}(T_j)$, and electrical power consumption, $\dot{E}_h^{k=1}(T_j)$, of the heat pump when operating at minimum compressor speed and outdoor temperature T_j using

$$\dot{Q}_h^{k=1}(T_j) = \dot{Q}_h^{k=1}(47) + \frac{\dot{Q}_h^{k=1}(62) - \dot{Q}_h^{k=1}(47)}{62 - 47} \cdot (T_j - 47) \qquad (4.2.4\text{-}1)$$

$$\dot{E}_h^{k=1}(T_j) = \dot{E}_h^{k=1}(47) + \frac{\dot{E}_h^{k=1}(62) - \dot{E}_h^{k=1}(47)}{62 - 47} \cdot (T_j - 47) \qquad (4.2.4\text{-}2)$$

where $\dot{Q}_h^{k=1}(62)$ and $\dot{E}_h^{k=1}(62)$ are determined from the $H0_1$ Test, $\dot{Q}_h^{k=1}(47)$ and $\dot{E}_h^{k=1}(47)$ are determined from the $H1_1$ Test, and all four quantities are calculated as specified in section 3.7. Evaluate the space heating capacity, $\dot{Q}_h^{k=2}(T_j)$, and electrical power consumption, $\dot{E}_h^{k=2}(T_j)$, of the heat pump when operating at maximum compressor speed and outdoor temperature T_j by solving Equations 4.2.2–3 and 4.2.2–4, respectively, for k=2. Determine the Equation 4.2.2–3 and 4.2.2–4 quantities $\dot{Q}_h^{k=2}(47)$ and $\dot{E}_h^{k=2}(47)$ from the $H1_2$ Test and the calculations specified in section 3.7. Determine $\dot{Q}_h^{k=2}(35)$ and $\dot{E}_h^{k=2}(35)$ from the $H2_2$ Test and the calculations specified in section 3.9 or, if the $H2_2$ Test is not conducted, by conducting the calculations specified in section 3.6.4. Determine $\dot{Q}_h^{k=2}(17)$ and $\dot{E}_h^{k=2}(17)$ from the $H3_2$ Test and the calculations specified in section 3.10. Calculate the space heating capacity, $\dot{Q}_h^{k=v}(T_j)$, and electrical power consumption, $\dot{E}_h^{k=v}(T_j)$, of the heat pump when operating at outdoor temperature T_j and the intermediate compressor speed used during the section 3.6.4 $H2_V$ Test using

$$\dot{Q}_h^{k=v}(T_j) = \dot{Q}_h^{k=v}(35) + M_Q \cdot (T_j - 35) \qquad (4.2.4\text{-}3)$$

$$\dot{E}_h^{k=v}(T_j) = \dot{E}_h^{k=v}(35) + M_E \cdot (T_j - 35) \qquad (4.2.4\text{-}4)$$

where $\dot{Q}_h^{k=v}(35)$ and $\dot{E}_h^{k=v}(35)$ are determined from the $H2_V$ Test and calculated as specified in section 3.9. Approximate the slopes of the k=v intermediate speed heating capacity and electrical power input curves, M_Q and M_E, as follows:

$$M_Q = \left[\frac{\dot{Q}_h^{k=1}(62) - \dot{Q}_h^{k=1}(47)}{62-47} \cdot \left(1 - N_Q\right)\right] + \left[\frac{N_Q \cdot \dot{Q}_h^{k=2}(35) - \dot{Q}_h^{k=2}(17)}{35-17}\right]$$

$$M_E = \left[\frac{\dot{E}_h^{k=1}(62) - \dot{E}_h^{k=1}(47)}{62-47} \cdot \left(1 - N_E\right)\right] + \left[\frac{N_E \cdot \dot{E}_h^{k=2}(35) - \dot{E}_h^{k=2}(17)}{35-17}\right]$$

where,

$$N_Q = \frac{\dot{Q}_h^{k=v}(35) - \dot{Q}_h^{k=1}(35)}{\dot{Q}_h^{k=2}(35) - \dot{Q}_h^{k=1}(35)}, \text{ and}$$

$$N_E = \frac{\dot{E}_h^{k=v}(35) - \dot{E}_h^{k=1}(35)}{\dot{E}_h^{k=2}(35) - \dot{E}_h^{k=1}(35)}.$$

Use Equations 4.2.4–1 and 4.2.4–2, respectively, to calculate $\dot{Q}_h^{k=1}(35)$ and $\dot{E}_h^{k=1}(35)$.

The calculation of Equation 4.2–1 quantities

$$\frac{e_h\left(T_j\right)}{N} \text{ and } \frac{RH\left(T_j\right)}{N}$$

differs depending upon whether the heat pump would operate at minimum speed (section 4.2.4.1), operate at an intermediate speed (section 4.2.4.2), or operate at maximum speed (section 4.2.4.3) in responding to the building load.

4.2.4.1 Steady-state space heating capacity when operating at minimum compressor speed is greater than or equal to the building heating load at temperature T_j, $\dot{Q}_h^{k=1}(T_j \geq BL(T_j))$. Evaluate the Equation 4.2–1 quantities

$$\frac{e_h\left(T_j\right)}{N} \text{ and } \frac{RH\left(T_j\right)}{N}$$

as specified in section 4.2.3.1. Except now use Equations 4.2.4–1 and 4.2.4–2 to evaluate $\dot{Q}_h^{k=1}(T_j)$ and $\dot{E}_h^{k=1}(T_j)$, respectively, and replace section 4.2.3.1 references to ''low capacity'' and section 3.6.3 with ''minimum speed'' and section 3.6.4. Also, the last sentence of section 4.2.3.1 does not apply.

4.2.4.2 Heat pump operates at an intermediate compressor speed (k=i) in order to match the building heating load at a temperature T_j, $\dot{Q}_h^{k=1}(T_j) < BL(T_j) < \dot{Q}_h^{k=2}(T_j)$. Calculate

$$\frac{RH\left(T_j\right)}{N}$$

using Equation 4.2.3–2 while evaluating

$$\frac{e_h\left(T_j\right)}{N}$$

using,

$$\frac{e_h\left(T_j\right)}{N} = \dot{E}_h^{k=1}\left(T_j\right) \cdot \delta'\left(T_j\right) \cdot \frac{n_j}{N}$$

where,

$$\dot{E}_h^{k=i}\left(T_j\right) = \frac{\dot{Q}_h^{k=i}\left(T_j\right)}{3.413\ \frac{Btu/h}{W} \cdot COP^{k=i}\left(T_j\right)}$$

and $\delta(T_j)$ is evaluated using Equation 4.2.3–3 while,

$\dot{Q}_h^{k=i}(T_j) = BL(T_j)$, the space heating capacity delivered by the unit in matching the building load at temperature (T_j), Btu/h. The matching occurs with the heat pump operating at compressor speed k=i.

$COP^{k=i}(T_j)$ = the steady-state coefficient of performance of the heat pump when operating at compressor speed k=i and temperature T_j, dimensionless.

For each temperature bin where the heat pump operates at an intermediate compressor speed, determine $COP^{k=i}(T_j)$ using,

$COP^{k=i}(T_j) = A + B \cdot T_j + C \cdot T_j^2$.

For each heat pump, determine the coefficients A, B, and C by conducting the following calculations once:

$$D = \frac{T_3^2 - T_4^2}{T_{vh}^2 - T_4^2}$$

$$B = \frac{COP^{k=2}(T_4) - COP^{k=1}(T_3) - D \cdot \left[COP^{k=2}(T_4) - COP^{k=v}(T_{vh})\right]}{T_4 - T_3 - D \cdot (T_4 - T_{vh})}$$

where,

T_3 = the outdoor temperature at which the heat pump, when operating at minimum compressor speed, provides a space heating capacity that is equal to the building load ($\dot{Q}_h^{k=1}(T_3)$ = $BL(T_3)$), °F. Determine T_3 by equating Equations 4.2.4–1 and 4.2–2 and solving for:

$$C = \frac{COP^{k=2}(T_4) - COP^{k=1}(T_3) - B \cdot (T_4 - T_3)}{T_4^2 - T_3^2}$$

$$A = COP^{k=2}(T_4) - B \cdot T_4 - C \cdot T_4^2.$$

outdoor temperature.

T_{vh} = the outdoor temperature at which the heat pump, when operating at the intermediate compressor speed used during the section 3.6.4 $H2_V$ Test, provides a space heating capacity that is equal to the building load ($\dot{Q}_h^{k=v}(T_{vh})$ = $BL(T_{vh})$), °F. Determine T_{vh} by equating Equations 4.2.4–3 and 4.2–2 and solving for outdoor temperature.

T_4 = the outdoor temperature at which the heat pump, when operating at maximum compressor speed, provides a space heating capacity that is equal to the building load ($\dot{Q}_h^{k=2}(T_4)$ = $BL(T_4)$), °F. Determine T_4 by equating Equations 4.2.2–3 (k=2) and 4.2–2 and solving for outdoor temperature.

$$COP^{k=1}(T_3) = \frac{\dot{Q}_h^{k=1}(T_3)\left[\text{Eqn. 4.2.4-1, substituting } T_3 \text{ for } T_j\right]}{3.413\frac{Btu/h}{W} \cdot \dot{E}_h^{k=1}(T_3)\left[\text{Eqn. 4.2.4-2, substituting } T_3 \text{ for } T_j\right]}$$

$$COP^{k=v}(T_{vh}) = \frac{\dot{Q}_h^{k=v}(T_{vh})\left[\text{Eqn. 4.2.4-3, substituting } T_{vh} \text{ for } T_j\right]}{3.413\frac{Btu/h}{W} \cdot \dot{E}_h^{k=v}(T_{vh})\left[\text{Eqn. 4.2.4-4, substituting } T_{vh} \text{ for } T_j\right]}$$

$$COP^{k=2}(T_4) = \frac{\dot{Q}_h^{k=2}(T_4)\left[\text{Eqn. 4.2.2-3, substituting } T_4 \text{ for } T_j\right]}{3.413\frac{Btu/h}{W} \cdot \dot{E}_h^{k=2}(T_4)\left[\text{Eqn. 4.2.2-4, substituting } T_4 \text{ for } T_j\right]}$$

4.2.4.3 Heat pump must operate continuously at maximum (k=2) compressor speed at temperature T_j, $BL(T_j) \geq \dot{Q}_h^{k=2}(T_j)$. Evaluate the Equation 4.2–1 quantities

$$\frac{e_h(T_j)}{N} \text{ and } \frac{RH(T_j)}{N}$$

as specified in section 4.2.3.4 with the understanding that $\dot{Q}_h^{k=2}(T_j)$ and $\dot{E}_h^{k=2}(T_j)$ correspond to maximum compressor speed operation and are derived from the results of the specified section 3.6.4 tests.

4.2.5 Heat pumps having a heat comfort controller. Heat pumps having heat comfort controllers, when set to maintain a typical minimum air delivery temperature, will cause the heat pump condenser to operate less because of a greater contribution from the resistive elements. With a conventional heat pump, resistive heating is only initiated if the heat pump condenser cannot meet the building load (*i.e.*, is delayed until a second stage call from the indoor thermostat). With a heat comfort controller, resistive heating can occur even though the heat pump condenser has adequate capacity to meet the building load (*i.e.*, both on during a first stage call from the indoor thermostat). As a result, the outdoor temperature where the heat pump compressor no longer cycles (*i.e.*, starts to run continuously), will be lower than if the heat pump did not have the heat comfort controller.

4.2.5.1 Heat pump having a heat comfort controller: additional steps for calculating the HSPF of a heat pump having a single-speed compressor that was tested with a fixed-speed indoor fan installed, a constant-air-volume-rate indoor fan installed, or with no indoor fan installed. Calculate the space heating capacity and electrical power of the heat pump without the heat comfort controller being active as specified in section 4.2.1 (Equations 4.2.1–4 and 4.2.1–5) for each outdoor bin temperature, T_j, that is listed in Table 17. Denote these capacities and electrical powers by using the subscript ''hp'' instead of ''h.'' Calculate the mass flow rate (expressed in pounds-mass of dry air per hour) and the specific heat of the indoor air (expressed in Btu/lbm$_{da}$ · °F) from the results of the H1 Test using:

$$\dot{m}_{da} = \overline{\dot{V}}_s \cdot 0.075 \frac{1\text{bm}_{da}}{\text{ft}^3} \cdot \frac{60 \text{ min}}{\text{hr}} = \frac{\overline{\dot{V}}_{mx}}{v'_n \cdot [1 + W_n]} \cdot \frac{60 \text{ min}}{\text{hr}} = \frac{\overline{\dot{V}}_{mx}}{v_n} \cdot \frac{60 \text{ min}}{\text{hr}}$$

$$C_{p,da} = 0.24 + 0.444 \cdot W_n$$

where $\overline{\dot{V}}_s$, $\overline{\dot{V}}_{mx}$, v'_n (or v_n), and W_n are defined following Equation 3–1. For each outdoor bin temperature listed in Table 17, calculate the nominal temperature of the air leaving the heat pump condenser coil using,

$$T_o(T_j) = 70\ °F + \frac{\dot{Q}_{hp}(T_j)}{\dot{m}_{da} \cdot C_{p,da}}.$$

Evaluate $e_h(T_j/N)$, $RH(T_j)/N$, $X(T_j)$, PLF_j, and $\delta(T_j)$ as specified in section 4.2.1. For each bin calculation, use the space heating capacity and electrical power from Case 1 or Case 2, whichever applies.

Case 1. For outdoor bin temperatures where $T_o(T_j)$ is equal to or greater than T_{CC} (the maximum supply temperature determined according to section 3.1.9), determine $\dot{Q}_h(T_j)$ and $\dot{E}_h(T_j)$ as specified in section 4.2.1 (*i.e.*, $\dot{Q}_h(T_j) = \dot{Q}_{hp}(T_j)$ and $\dot{E}_{hp}(T_j) = \dot{E}_{hp}(T_j)$). Note: Even though $T_o(T_j) \geq T_{cc}$, resistive heating may be required; evaluate Equation 4.2.1–2 for all bins.

Case 2. For outdoor bin temperatures where $T_o(T_j) > T_{cc}$, determine $\dot{Q}_h(T_j)$ and $\dot{E}_h(T_j)$ using,

$$\dot{Q}_h(T_j) = \dot{Q}_{hp}(T_j) + \dot{Q}_{CC}(T_j)$$

$$\dot{E}_h(T_j) = \dot{E}_{hp}(T_j) + \dot{E}_{CC}(T_j)$$

where,

$$\dot{Q}_{CC}(T_j) = \dot{m}_{da} \cdot C_{p,da} \cdot [T_{CC} - T_o(T_j)]$$

$$\dot{E}_{CC}(T_j) = \frac{\dot{Q}_{CC}(T_j)}{3.413 \frac{\text{Btu}}{\text{W} \cdot \text{h}}}$$

NOTE: Even though $T_o(T_j) < T_{cc}$, additional resistive heating may be required; evaluate Equation 4.2.1–2 for all bins.

4.2.5.2 Heat pump having a heat comfort controller: additional steps for calculating the HSPF of a heat pump having a single-speed compressor and a variable-speed, variable-air-volume-rate indoor fan. Calculate the space heating capacity and electrical power of the heat pump without the heat comfort controller being active as specified in section 4.2.2 (Equations 4.2.2–1 and 4.2.2–2)

for each outdoor bin temperature, T_j, that is listed in Table 17. Denote these capacities and electrical powers by using the subscript ''hp'' instead of ''h.'' Calculate the mass flow rate (expressed in pounds-mass of dry air per hour) and the specific heat of the indoor air (expressed in Btu/lbm_{da} · °F) from the results of the $H1_2$ Test using:

$$\dot{m}_{da} = \overline{\dot{V}}_s \cdot 0.075\ \frac{1\text{bm}_{da}}{\text{ft}^3} \cdot \frac{60\ \text{min}}{\text{hr}} = \frac{\overline{\dot{V}}_{mx}}{v'_n \cdot \left[1 + W_n\right]} \cdot \frac{60\ \text{min}}{\text{hr}} = \frac{\overline{\dot{V}}_{mx}}{v_n} \cdot \frac{60\ \text{min}}{\text{hr}}$$

$$C_{p,da} = 0.24 + 0.444 \cdot W_n$$

where $\overline{\dot{V}}_S$, $\overline{\dot{V}}_{mx}$, v'_n (or v_n), and W_n are defined following Equation 3–1. For each outdoor bin temperature listed in Table 17, calculate the nominal temperature of the air leaving the heat pump condenser coil using,

$$T_o\left(T_j\right) = 70\ °F + \frac{\dot{Q}_{hp}\left(T_j\right)}{\dot{m}_{da}\ \cdot\ C_{p,da}}.$$

Evaluate $e_h(T_j)/N$, $RH(T_j)/N$, $X(T_j)$, PLF_j, and $\delta(T_j)$ as specified in section 4.2.1 with the exception of replacing references to the H1C Test and section 3.6.1 with the $H1C_1$ Test and section 3.6.2. For each bin calculation, use the space heating capacity and electrical power from Case 1 or Case 2, whichever applies.

Case 1. For outdoor bin temperatures where $T_o(T_j)$ is equal to or greater than T_{CC} (the maximum supply temperature determined according to section 3.1.9), determine $\dot{Q}_h(T_j)$ and $\dot{E}_h(T_j)$ as specified in section 4.2.2 (*i.e.* $\dot{Q}_h(T_j) = \dot{Q}_{hp}(T_j)$ and $\dot{E}_h(T_j) = \dot{E}_{hp}(T_j)$). Note: Even though $T_o(T_j) \geq T_{CC}$, resistive heating may be required; evaluate Equation 4.2.1–2 for all bins.

Case 2. For outdoor bin temperatures where $T_o(T_j) < T_{CC}$, determine $\dot{Q}_h(T_j)$ and $\dot{E}_h(T_j)$ using,

$\dot{Q}_h(T_j) = \dot{Q}_{hp}(T_j) + \dot{Q}_{CC}(T_j)$

$\dot{E}_h(T_j) = \dot{E}_{hp}(T_j) + \dot{E}_{CC}(T_j)$

where,

$\dot{Q}_{CC}(T_j) = \dot{m}_{da} \cdot C_{p,da} \cdot [T_{CC} - T_o(T_j)]$

$$\dot{E}_{CC}\left(T_j\right) = \frac{\dot{Q}_{CC}\left(T_j\right)}{3.413\,\frac{\text{Btu}}{\text{W}\ \cdot\ \text{h}}}.$$

NOTE: Even though $T_o(T_j) < T_{cc}$, additional resistive heating may be required; evaluate Equation
4.2.1–2 for all bins.

4.2.5.3 Heat pumps having a heat comfort controller: additional steps for calculating the HSPF of a heat pump having a two-capacity compressor. Calculate the space heating capacity and electrical power of the heat pump without the heat comfort controller being active as specified in section 4.2.3 for both high and low capacity and at each outdoor bin temperature, T_j, that is listed in Table 17. Denote these capacities and electrical powers by using the subscript ''hp'' instead of ''h.'' For the low capacity case, calculate the mass flow rate (expressed in pounds-mass of dry air per hour) and the specific heat of the indoor air (expressed in Btu/lbm_{da} · °F) from the results of the $H1_1$ Test using:

$$\dot{m}_{da}^{k=1} = \overline{\dot{V}}_s\ \cdot\ 0.075\frac{1\text{bm}_{da}}{\text{ft}^3}\ \cdot\ \frac{60\ \text{min}}{\text{hr}} = \frac{\overline{\dot{V}}_{mx}}{v'_n\ \cdot\ \left[1 + W_n\right]}\ \cdot\ \frac{60\ \text{min}}{\text{hr}} = \frac{\overline{\dot{V}}_{mx}}{v_n}\ \cdot\ \frac{60\ \text{min}}{\text{hr}}$$

$$C_{p,da}^{k=1} = 0.24 + 0.444 \cdot W_n$$

where $\overline{\dot{V}}_s$, $\overline{\dot{V}}_{mx}$, v'_n (or v_n), and W_n are defined following Equation 3–1. For each outdoor bin temperature listed in Table 17, calculate the nominal temperature of the air leaving the heat pump condenser coil when operating at low capacity using,

$$T_o^{k=1}\left(T_j\right) = 70\ °F + \frac{\dot{Q}_{hp}^{k=1}\left(T_j\right)}{\dot{m}_{da}^{k=1} \cdot C_{p,da}^{k=1}}.$$

Repeat the above calculations to determine the mass flow rate ($\dot{m}_{da}^{k=2}$) and the specific heat of the indoor air ($C_{p,da}^{k=2}$) when operating at high capacity by using the results of the $H1_2$ Test. For each outdoor bin temperature listed in Table 17, calculate the nominal temperature of the air leaving the heat pump condenser coil when operating at high capacity using,

$$T_o^{k=2}\left(T_j\right) = 70\ °F + \frac{\dot{Q}_{hp}^{k=2}\left(T_j\right)}{\dot{m}_{da}^{k=2} \cdot C_{p,da}^{k=2}}.$$

Evaluate $e_h(T_j)/N$, $RH(T_j)/N$, $X^{k=1}(T_j)$, and/or $X^{k=2}(T_j)$, PLF_j, and $\delta'(T_j)$ or $\delta''(T_j)$ as specified in section 4.2.3.1. 4.2.3.2, 4.2.3.3, or 4.2.3.4, whichever applies, for each temperature bin. To evaluate these quantities, use the low-capacity space heating capacity and the low-capacity electrical power from Case 1 or Case 2, whichever applies; use the high-capacity space heating capacity and the high-capacity electrical power from Case 3 or Case 4, whichever applies.

Case 1. For outdoor bin temperatures where $T_o^{k=1}(T_j)$ is equal to or greater than T_{CC} (the maximum supply temperature determined according to section 3.1.9), determine $\dot{Q}_h^{k=1}(T_j)$ and $\dot{E}_h^{k=1}(T_j)$ as specified in section 4.2.3 (*i.e.*, $\dot{Q}_h^{k=1}(T_j) = \dot{Q}_{hp}^{k=1}(T_j)$ and $\dot{E}_h^{k=1}(T_j) = \dot{E}_{hp}^{k=1}(T_j)$).

NOTE: Even though $T_o^{k=1}(T_j) \geq T_{CC}$, resistive heating may be required; evaluate $RH(T_j)/N$ for all bins.

Case 2. For outdoor bin temperatures where $T_o^{k=1}(T_j) < T_{CC}$, determine $\dot{Q}_h^{k=1}(T_j)$ and $\dot{E}_h^{k=1}(T_j)$ using,

$$\dot{Q}_h^{k=1}(T_j) = \dot{Q}_{hp}^{k=1}(T_j) + \dot{Q}_{CC}^{k=1}(T_j)$$

$$\dot{E}_h^{k=1}(T_j) = \dot{E}_{hp}^{k=1}(T_j) + \dot{E}_{CC}^{k=1}(T_j)$$

where,

$$\dot{Q}_{CC}^{k=1}\left(T_j\right) = \dot{m}_{da}^{k=1} \cdot C_{p,da}^{k=1} \cdot \left[T_{CC} - T_o^{k=1}\left(T_j\right)\right]$$

$$\dot{E}_{CC}^{k=1}\left(T_j\right) = \frac{\dot{Q}_{CC}^{k=1}\left(T_j\right)}{3.413\,\frac{Btu}{W \cdot h}}.$$

NOTE: Even though $T_o^{k=1}(T_j) \geq T_{cc}$, additional resistive heating may be required; evaluate $RH(T_j)/N$ for all bins.

Case 3. For outdoor bin temperatures where $T_o^{k=2}(T_j)$ is equal to or greater than T_{CC}, determine $\dot{Q}_h^{k=2}(T_j)$ and $\dot{E}_h^{k=2}(T_j)$ as specified in section 4.2.3 (*i.e.*, $\dot{Q}_h^{k=2}(T_j) = \dot{Q}_{hp}^{k=2}(T_j)$ and $\dot{E}_h^{k=2}(T_j) = \dot{E}_{hp}^{k=2}(T_j)$).

NOTE: Even though $T_o^{k=2}(T_j) < T_{CC}$, resistive heating may be required; evaluate $RH(T_j)/N$ for all bins.

Case 4. For outdoor bin temperatures where $T_o^{k=2}(T_j) < T_{CC}$, determine $\dot{Q}_h^{k=2}(T_j)$ and $\dot{E}_h^{k=2}(T_j)$ using,

$$\dot{Q}_h^{k=2}\left(T_j\right) = \dot{Q}_{hp}^{k=2}\left(T_j\right) + \dot{Q}_{CC}^{k=2}\left(T_j\right)$$

$$\dot{E}_h^{k=2}\left(T_j\right) = \dot{E}_{hp}^{k=2}\left(T_j\right) + \dot{E}_{CC}^{k=2}\left(T_j\right)$$

where,

$$\dot{Q}_{CC}^{k=2}\left(T_j\right) = \dot{m}_{da}^{k=2} \cdot C_{p,da}^{k=2} \cdot \left[T_{CC} - T_o^{k=2}\left(T_j\right)\right]$$

$$\dot{E}_{CC}^{k=2}\left(T_j\right) = \frac{\dot{Q}_{CC}^{k=2}\left(T_j\right)}{3.413\,\frac{Btu}{W \cdot h}}.$$

NOTE: Even though $T_o^{k=2}(T_j) < T_{cc}$, additional resistive heating may be required; evaluate $RH(T_j)/N$ for all bins.

4.2.5.4 Heat pumps having a heat comfort controller: additional steps for calculating the HSPF of a heat pump having a variable-speed compressor. [Reserved]

4.3 Calculations of the Actual and Representative Regional Annual Performance Factors for Heat Pumps.

4.3.1 Calculation of actual regional annual performance factors (APF_A) for a particular location and for each standardized design heating requirement.

$$APF_A = \frac{CLH_A \cdot \dot{Q}_c^k(95) + HLH_A \cdot DHR \cdot C}{\frac{CLH_A \cdot \dot{Q}_c^k(95)}{SEER} + \frac{HLH_A \cdot DHR \cdot C}{HSPF}}$$

where,

CLH_A = the actual cooling hours for a particular location as determined using the map given in Figure 3, hr.

$\dot{Q}_c^k(95)$ = the space cooling capacity of the unit as determined from the A or A_2 Test, whichever applies, Btu/h.

HLH_A = the actual heating hours for a particular location as determined using the map given in Figure 2, hr.

DHR = the design heating requirement used in determining the HSPF; refer to section 4.2 and Definition 1.22, Btu/h.

C = defined in section 4.2 following Equation 4.2–2, dimensionless.

SEER = the seasonal energy efficiency ratio calculated as specified in section 4.1, Btu/W·h.

HSPF = the heating seasonal performance factor calculated as specified in section 4.2 for the generalized climatic region that includes the particular location of interest (see Figure 2), Btu/W·h. The HSPF should correspond to the actual design heating requirement (DHR), if known. If it does not, it may correspond to one of the standardized design heating requirements referenced in section 4.2.

4.3.2 Calculation of representative regional annual performance factors (APF_R) for each generalized climatic region and for each standardized design heating requirement.

$$APF_R = \frac{CLH_R \cdot \dot{Q}_c^k(95) + HLH_R \cdot DHR \cdot C}{\frac{CLH_R \cdot \dot{Q}_c^k(95)}{SEER} + \frac{HLH_R \cdot DHR \cdot C}{HSPF}}$$

where,

CLH_R = the representative cooling hours for each generalized climatic region, Table 19, hr.

HLH_R = the representative heating hours for each generalized climatic region, Table 19, hr.

HSPF = the heating seasonal performance factor calculated as specified in section 4.2 for the each generalized climatic region and for each standardized design heating requirement within each region, Btu/W.h.

The SEER, $\dot{Q}_c^k(95)$, DHR, and C are the same quantities as defined in section 4.3.1. Figure 2 shows the generalized climatic regions. Table 18 lists standardized design heating requirements.

TABLE 19—REPRESENTATIVE COOLING AND HEATING LOAD HOURS FOR EACH GENERALIZED CLIMATIC REGION

Region	CLH_R	HLH_R
I	2400	750
II	1800	1250
III	1200	1750
IV	800	2250
V	400	2750
VI	200	2750

4.4. Rounding of SEER, HSPF, and APF for reporting purposes. After calculating SEER according to section 4.1, round it off as specified in subpart B 430.23(m)(3)(i) of Title 10 of the Code of Federal Regulations. Round section 4.2 HSPF values and section 4.3 APF values as per §430.23(m)(3)(ii) and (iii) of Title 10 of the Code of Federal Regulations.

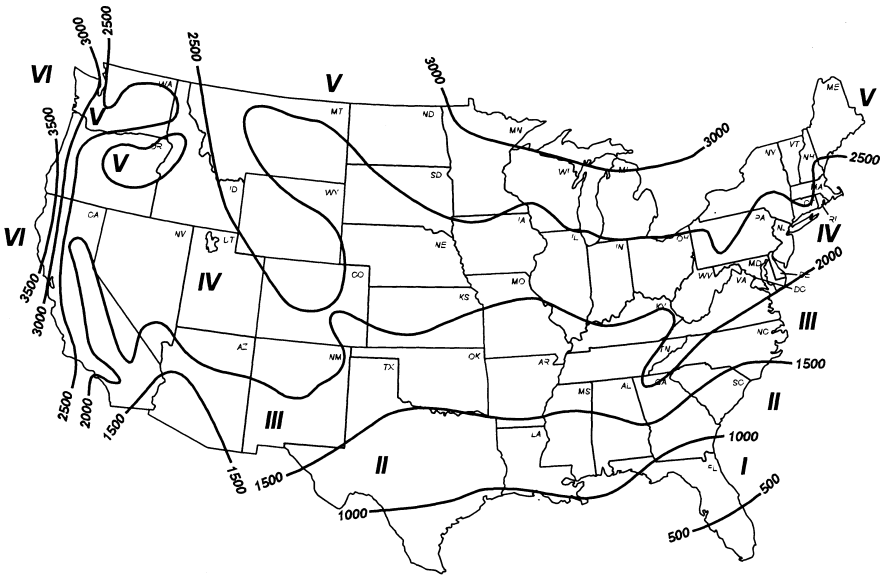

Figure 2 Heating Load Hours (HLH_A) for the United States

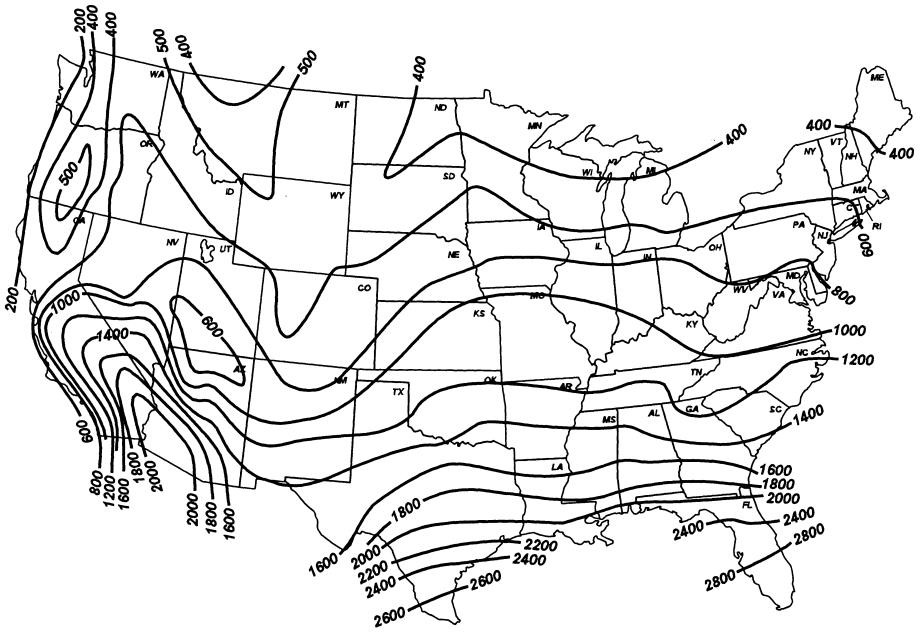

Figure 3 Cooling Load Hours (CLH_A) for the United States

APPENDIX N TO SUBPART B OF PART 430—UNIFORM TEST METHOD FOR MEASURING THE ENERGY CONSUMPTION OF FURNACES AND BOILERS

1.0 Scope. The scope of this appendix is as specified in section 2.0 of ANSI/ASHRAE Standard 103–1993.

2.0 Definitions. Definitions include the definitions specified in section 3 of ANSI/ASHRAE Standard 103–1993 and the following additional and modified definitions:

2.1 *ANSI/ASHRAE Standard 103–1993* means the test standard published in 1993 by ASHRAE, approved by the American National Standards Institute (ANSI) on October 4, 1993, and entitled ''Method of Testing for Annual Fuel Utilization Efficiency of Residential Central Furnaces and Boilers'' (with errata of October 24, 1996).

2.2 *ASHRAE* means the American Society of Heating, Refrigerating and Air-Conditioning Engineers, Inc.

2.3 *Thermal stack damper* means a type of stack damper which is dependent for operation exclusively upon the direct conversion of thermal energy of the stack gases to open the damper.

2.4 *Isolated combustion system.* The definition of isolation combustion system in section 3 of ANSI/ASHRAE Standard 103–1993 is incorporated with the addition of the following: ''The unit is installed in an un-conditioned indoor space isolated from the heated space.''

3.0 Classifications. Classifications are as specified in section 4 of ANSI/ASHRAE Standard 103–1993.

4.0 Requirements. Requirements are as specified in section 5 of ANSI/ASHRAE Standard 103–1993.

5.0 Instruments. Instruments must be as specified in section 6 of ANSI/ASHRAE Standard 103–1993.

6.0 Apparatus. The apparatus used in conjunction with the furnace or boiler during the testing shall be as specified in section 7 of ANSI/ASHRAE Standard 103–1993 except for the second paragraph of section 7.2.2.2 and except for section 7.2.2.5, and as specified in section 6.1 of this appendix.

6.1 *Downflow furnaces.* Install the internal section of vent pipe the same size as the flue collar for connecting the flue collar to the top of the unit, if not supplied by the manufacturer. Do not insulate the internal vent pipe during the jacket loss test (if conducted) described in section 8.6 of ANSI/ASHRAE Standard 103–1993 or the steady-state test described in section 9.1 of ANSI/ASHRAE Standard 103–1993. Do not insulate the internal vent pipe before the cool-down and heat-up tests described in sections 9.5 and 9.6, respectively, of ANSI/ASHRAE

Standard 103–1993. If the vent pipe is surrounded by a metal jacket, do not insulate the metal jacket. Install a 5-ft test stack of the same cross sectional area or perimeter as the vent pipe above the top of the furnace. Tape or seal around the junction connecting the vent pipe and the 5-ft test stack. Insulate the 5-ft test stack with insulation having an R-value not less than 7 and an outer layer of aluminum foil. (See Figure 3–E of ANSI/ASHRAE Standard 103–1993.)

7.0 Testing conditions. The testing conditions shall be as specified in section 8 of ANSI/ASHRAE Standard 103–1993 with errata of October 24, 1996, except for section 8.6.1.1; and as specified in section 7.1 of this appendix.

7.1 *Measurement of jacket surface temperature.* The jacket of the furnace or boiler shall be subdivided into 6-inch squares when practical, and otherwise into 36-square-inch regions comprising 4 in. × 9 in. or 3 in. × 12 in. sections, and the surface temperature at the center of each square or section shall be determined with a surface thermocouple. The 36-square-inch areas shall be recorded in groups where the temperature differential of the 36-square-inch area is less than 10 °F for temperature up to 100 °F above room temperature and less than 20 °F for temperature more than 100 °F above room temperature. For forced air central furnaces, the circulating air blower compartment is considered as part of the duct system and no surface temperature measurement of the blower compartment needs to be recorded for the purpose of this test. For downflow furnaces, measure all cabinet surface temperatures of the heat exchanger and combustion section, including the bottom around the outlet duct, and the burner door, using the 36 square-inch thermocouple grid. The cabinet surface temperatures around the blower section do not need to be measured (See figure 3–E of ANSI/ASHRAE Standard 103–1993.)

8.0 Test procedure. Testing and measurements shall be as specified in section 9 of ANSI/ASHRAE Standard 103–1993 except for sections 9.5.1.1, 9.5.1.2.1, 9.5.1.2.2, 9.5.2.1, and section 9.7.1. ; and as specified in sections 8.1, 8.2, 8.3, 8.4, and 8.5, of this appendix.

8.1 *Input to interrupted ignition device.* For burners equipped with an interrupted ignition device, record the nameplate electric power used by the ignition device, PE_{IG}, or use PE_{IG}=0.4 kW if no nameplate power input is provided. Record the nameplate ignition device on-time interval, t_{IG}, or measure the on-time period at the beginning of the test at the time the burner is turned on with a stop watch, if no nameplate value is given. Set t_{IG}=0 and PE_{IG}=0 if the device on-time is less than or equal to 5 seconds after the burner is on.

8.2 *Gas- and oil-fueled gravity and forced air central furnaces without stack dampers cool-down test.* Turn off the main burner after steady-state testing is completed, and measure the flue gas temperature by means of the thermocouple grid described in section 7.6 of ANSI/ASHRAE 103–1993 at 1.5 minutes ($T_{F,OFF}(t_3)$) and 9 minutes ($T_{F,OFF}(t_4)$) after the burner shuts off. An integral draft diverter shall remain blocked and insulated, and the stack restriction shall remain in place. On atmospheric systems with an integral draft diverter or draft hood, equipped with either an electromechanical inlet damper or an electro-mechanical flue damper that closes within 10 seconds after the burner shuts off to restrict the flow through the heat exchanger in the off-cycle, bypass or adjust the control for the electromechanical damper so that the damper remains open during the cool-down test. For furnaces that employ post purge, measure the length of the post-purge period with a stopwatch. The time from burner OFF to combustion blower OFF (electrically de-energized) shall be recorded as t_p. For the case where t_p is intended to be greater than 180 seconds, stop the combustion blower at 180 seconds and use that value for t_p. Measure the flue gas temperature by means of the thermocouple grid described in section 7.6 of ANSI/ASHRAE 103–1993 at the end of post-purge period, t_p ($T_{F,OFF}(t_p)$), and at the time (1.5 + t_p) minutes ($T_{F,OFF}(t_3)$) and (9.0 + t_p) minutes ($T_{F,OFF}(t_4)$) after the main burner shuts off. For the case where the measured tp is less than or equal to 30 seconds, it shall be tested as if there is no post purge and t_p shall be set equal to 0.

8.3 *Gas- and oil-fueled gravity and forced air central furnaces without stack dampers with adjustable fan control—cool-down test.* For a furnace with adjustable fan control, this time delay will be 3.0 minutes for non-condensing furnaces or 1.5 minutes for condensing furnaces or until the supply air temperature drops to a value of 40 °F above the inlet air temperature, whichever results in the longest fan on-time. For a furnace without adjustable fan control or with the type of adjustable fan control whose range of adjustment does not allow for the delay time specified above, the control shall be bypassed and the fan manually controlled to give the delay times specified above. For a furnace which employs a single motor to drive the power burner and the indoor air circulating blower, the power burner and indoor air circulating blower shall be stopped together.

8.4 *Gas-and oil-fueled boilers without stack dampers cool-down test.* After steady-state testing has been completed, turn the main burner(s) OFF and measure the flue gas temperature at 3.75 ($T_{F,OFF}(t_3)$) and 22.5 ($T_{F,OFF}(t_4)$) minutes after the burner shut off, using the thermocouple grid described in section 7.6 of ANSI/ASHRAE 103–1993. During this off-period, for units that do not have pump delay after shutoff, no water shall be allowed to circulate through the hot water boilers. For

units that have pump delay on shutoff, except those having pump controls sensing water temperature, the pump shall be stopped by the unit control and the time t^+, between burner shutoff and pump shutoff shall be measured within one-second accuracy. For units having pump delay controls that sense water temperature, the pump shall be operated for 15 minutes and t^+ shall be 15 minutes. While the pump is operating, the inlet water temperature and flow rate shall be maintained at the same values as used during the steady-state test as specified in sections 9.1 and 8.4.2.3 of ANSI/ASHRAE 103–1993.

For boilers that employ post purge, measure the length of the post-purge period with a stopwatch. The time from burner OFF to combustion blower OFF (electrically de-energized) shall be recorded as t_P. For the case where t_P is intended to be greater than 180 seconds, stop the combustion blower at 180 seconds and use that value for t_P. Measure the flue gas temperature by means of the thermocouple grid described in section 7.6 of ANSI/ASHRAE 103–1993 at the end of the post purge period $t_P(T_{F,OFF}(t_P))$ and at the time $(3.75 + t_P)$ minutes $(T_{F,OFF}(t_3))$ and $(22.5 + t_P)$ minutes $(T_{F,OFF}(t_4))$ after the main burner shuts off. For the case where the measured t_P is less or equal to 30 seconds, it shall be tested as if there is no post purge and t_P shall be set to equal 0.

8.5 *Direct measurement of off-cycle losses testing method*. [Reserved.]

9.0 Nomenclature. Nomenclature shall include the nomenclature specified in section 10 of ANSI/ASHRAE Standard 103–1993 and the following additional variables:

Eff_{motor}=Efficiency of power burner motor

PE_{IG}=Electrical power to the interrupted ignition device, kW

$R_{T,a}$=$R_{T,F}$ if flue gas is measured
=$R_{T,S}$ if stack gas is measured

$R_{T,F}$=Ratio of combustion air mass flow rate to stoichiometric air mass flow rate

$R_{T,S}$=Ratio of the sum of combustion air and relief air mass flow rate to stoichiometric air mass flow rate

t_{IG}=Electrical interrupted ignition device on-time, min.

$T_{a,SS,X}$=$T_{F,SS,X}$ if flue gas temperature is measured, °F
=$T_{S,SS,X}$ if stack gas temperature is measured, °F

y_{IG}=ratio of electrical interrupted ignition device on-time to average burner on-time

y_P=ratio of power burner combustion blower on-time to average burner on-time

10.0 Calculation of derived results from test measurements. Calculations shall be as specified in section 11 of ANSI/ASHRAE Standard 103–1993 and the October 24, 1996, Errata Sheet for ASHRAE Standard 103–1993, except for appendices B and C; and as specified in sections 10.1 through 10.8 and Figure 1 of this appendix.

10.1 *Annual fuel utilization efficiency*. The annual fuel utilization efficiency (AFUE) is as defined in sections 11.2.12 (non-condensing systems), 11.3.12 (condensing systems), 11.4.12 (non-condensing modulating systems) and 11.5.12 (condensing modulating systems) of ANSI/ASHRAE Standard 103–1993, except for the definition for the term $Effy_{HS}$ in the defining equation for AFUE. $Effy_{HS}$ is defined as:

$Effy_{HS}$=heating seasonal efficiency as defined in sections 11.2.11 (non-condensing systems), 11.3.11 (condensing systems), 11.4.11 (non-condensing modulating systems) and 11.5.11 (condensing modulating systems) of ANSI/ASHRAE Standard 103–1993 and is based on the assumptions that all weatherized warm air furnaces or boilers are located out-of-doors, that warm air furnaces which are not weatherized are installed as isolated combustion systems, and that boilers which are not weatherized are installed indoors.

10.2 *National average burner operating hours, average annual fuel energy consumption and average annual auxiliary electrical energy consumption for gas or oil furnaces and boilers*.

10.2.1 *National average number of burner operating hours*. For furnaces and boilers equipped with single stage controls, the national average number of burner operating hours is defined as:

BOH_{SS}=2,080 (0.77) A DHR–2,080 B

where:

2,080=national average heating load hours

0.77=adjustment factor to adjust the calculated design heating requirement and heating load hours to the actual heating load experienced by the heating system

DHR=typical design heating requirements as listed in Table 8 (in unit of kBtu/h) of ANSI/ASHRAE Standard 103–1993, using the proper value of Q_{OUT} defined in 11.2.8.1 of ANSI/ASHRAE Standard 103–1993

A=100,000 / [341,300(y_PPE+$y_{IG}PE_{IG}$+yBE)+(Q_{IN}–Q_P)$Effy_{HS}$], for forced draft unit, indoors
=100,000 / [341,300(y_PPE Eff_{motor}+$y_{IG}PE_{IG}$+y BE)+(Q_{IN}–Q_P)$Effy_{HS}$], for forced draft unit, ICS,
=100,000 / [341,300(y_PPE(1–Eff_{motor})+$y_{IG}PE_{IG}$+y BE)+(Q_{IN}–Q_P)$Effy_{HS}$], for induced draft unit, indoors, and
=100,000 / [341,300($y_{IG}PE_{IG}$+yBE)+(Q_{IN}–Q_P)$Effy_{HS}$], for induced draft unit, ICS

B=2 Q_P($Effy_{HS}$)(A) / 100,000

where:

Eff_{motor}=Power burner motor efficiency provided by manufacturer,
=0.50, an assumed default power burner efficiency if not provided by manufacturer.

100,000=factor that accounts for percent and kBtu

PE=burner electrical power input at full-load steady-state operation, including electrical ignition device if energized, as defined in 9.1.2.2 of ANSI/ASHRAE Standard 103–1993

y_P=ratio of induced or forced draft blower on-time to average burner on-time, as follows:
1 for units without post purge;
$1+(t_P/3.87)$ for single stage furnaces with post purge;
$1+(t_P/10)$ for two-stage and step modulating furnaces with post purge;
$1+(t_P/9.68)$ for single stage boilers with post purge; or
$1+(t_P/15)$ for two stage and step modulating boilers with post purge.

PE_{IG}=electrical input rate to the interrupted ignition device on burner (if employed), as defined in 8.1 of this appendix

y_{IG}=ratio of burner interrupted ignition device on-time to average burner on-time, as follows:
0 for burners not equipped with interrupted ignition device;
$(t_{IG}/3.87)$ for single stage furnaces;
$(t_{IG}/10)$ for two-stage and step modulating furnaces;
$(t_{IG}/9.68)$ for single stage boilers; or
$(t_{IG}/15)$ for two stage and step modulating boilers.

t_{IG}=on-time of the burner interrupted ignition device, as defined in 8.1 of this appendix

t_P=post purge time as defined in 8.2 (furnace) or 8.4 (boiler) of this appendix
=0 if t_P is equal to or less than 30 second.

y=ratio of blower or pump on-time to average burner on-time, as follows:
1 for furnaces without fan delay;
1 for boilers without a pump delay;
$1+(t^+—t^-)/3.87$ for single stage furnaces with fan delay;
$1+(t^+—t^-)/10$ for two-stage and step modulating furnaces with fan delay;
$1+(t^+/9.68)$ for single stage boilers with pump delay; or
$1+(t^+/15)$ for two stage and step modulating boilers with pump delay.

BE=circulating air fan or water pump electrical energy input rate at full load steady-state operation, as defined in ANSI/ASHRAE Standard 103–1993

Q_{IN}=as defined in 11.2.8.1 of ANSI/ASHRAE Standard 103–1993

Q_P=as defined in 11.2.11 of ANSI/ASHRAE Standard 103–1993

$Effy_{HS}$=as defined in 11.2.11 (non-condensing systems) or 11.3.11.3 (condensing systems) of ANSI/ASHRAE Standard 103–1993, percent, and calculated on the basis of:
ICS installation, for non-weatherized warm air furnaces;
indoor installation, for non-weatherized boilers; or
outdoor installation, for furnaces and boilers that are weatherized.

2=ratio of the average length of the heating season in hours to the average heating load hours

t^+=as defined in 9.5.1.2 of ANSI/ASHRAE Standard 103–1993 or 8.4 of this appendix

t^-=as defined in 9.6.1 of ANSI/ASHRAE Standard 103–1993

10.2.1.1 For furnaces and boilers equipped with two stage or step modulating controls the average annual energy used during the heating season, E_M, is defined as:

$$E_M=(Q_{IN}-Q_P)\ BOH_{SS}+(8{,}760-4{,}600)Q_P$$

where:

Q_{IN}=as defined in 11.4.8.1.1 of ANSI/ASHRAE Standard 103–1993

Q_P=as defined in 11.4.12 of ANSI/ASHRAE Standard 103–1993

BOH_{SS}=as defined in section 10.2.1 of this appendix, in which the weighted $Effy_{HS}$ as defined in 11.4.11.3 or 11.5.11.3 of ANSI/ASHRAE Standard 103–1993 is used for calculating the values of A and B, the term DHR is based on the value of Q_{OUT} defined in 11.4.8.1.1 or 11.5.8.1.1 of ANSI/ASHRAE Standard 103–1993, and the term $(y_PPE+y_{IG}PE_{IG}+yBE)$ in the factor A is increased by the factor R, which is defined as:

R=2.3 for two stage controls
=2.3 for step modulating controls when the ratio of minimum-to-maximum output is greater than or equal to 0.5
=3.0 for step modulating controls when the ratio of minimum-to-maximum output is less than 0.5

$A=100{,}000/[341{,}300(y_PPE+y_{IG}PE_{IG}+y\ BE)\ R+(Q_{IN}-Q_P)\ Effy_{HS}]$, for forced draft unit, indoors
$=100{,}000/[341{,}300(y_PPE\ Eff_{motor}+y_{IG}PE_{IG}+y\ BE)\ R+(Q_{IN}-Q_P)Effy_{HS}]$, for forced draft unit, ICS,
$=100{,}000/[341{,}300(y_PPE(1–Eff_{motor})+y_{IG}PE_{IG}+y\ BE)\ R+(Q_{IN}-Q_P)\ Effy_{HS}]$, for induced draft unit, indoors, and
$=100{,}000/[341{,}300(y_{IG}PE_{IG}+y\ BE)\ R+(Q_{IN}-Q_P)\ Effy_{HS}]$, for induced draft unit, ICS

where:

Eff_{motor}=Power burner motor efficiency provided by manufacturer,
=0.50, an assumed default power burner efficiency if none provided by manufacturer.

$Effy_{HS}$=as defined in 11.4.11.3 or 11.5.11.3 of ANSI/ASHRAE Standard 103–1993, and calculated on the basis of:
—ICS installation, for non-weatherized warm air furnaces
—indoor installation, for non-weatherized boilers
—outdoor installation, for furnaces and boilers that are weatherized

8,760=total number of hours per year

4,600=as specified in 11.4.12 of ANSI/ASHRAE Standard 103–1993

10.2.1.2 For furnaces and boilers equipped with two stage or step modulating controls the national average number of burner operating hours at the reduced operating mode is defined as:

$BOH_R=X_RE_M/Q_{IN,R}$

where:

X_R=as defined in 11.4.8.7 of ANSI/ASHRAE Standard 103–1993
E_M=as defined in section 10.2.1.1 of this appendix
$Q_{IN,R}$=as defined in 11.4.8.1.2 of ANSI/ASHRAE Standard 103–1993

10.2.1.3 For furnaces and boilers equipped with two stage controls the national average number of burner operating hours at the maximum operating mode (BOH_H) is defined as:

$BOH_H=X_HE_M/Q_{IN}$

where:

X_H=as defined in 11.4.8.6 of ANSI/ASHRAE Standard 103–1993
E_M=as defined in section 10.2.1.1 of this appendix
Q_{IN}=as defined in 11.4.8.1.1 of ANSI/ASHRAE Standard 103–1993

10.2.1.4 For furnaces and boilers equipped with step modulating controls the national average number of burner operating hours at the modulating operating mode (BOH_M) is defined as:

$BOH_M=X_HE_M/Q_{IN,M}$

where:

X_H=as defined in 11.4.8.6 of ANSI/ASHRAE Standard 103–1993
E_M=as defined in section 10.2.1.1 of this appendix
$Q_{IN,M}=Q_{OUT,M}/(Effy_{SS,M}/100)$
$Q_{OUT,M}$=as defined in 11.4.8.10 or 11.5.8.10 of ANSI/ASHRAE Standard 103–1993, as appropriate
$Effy_{SS,M}$=as defined in 11.4.8.8 or 11.5.8.8 of ANSI/ASHRAE Standard 103–1993, as appropriate, in percent
100=factor that accounts for percent

10.2.2 *Average annual fuel energy consumption for gas or oil fueled furnaces or boilers.* For furnaces or boilers equipped with single stage controls the average annual fuel energy consumption (E_F) is expressed in Btu per year and defined as:

$E_F=BOH_{SS}(Q_{IN}-Q_P)+8{,}760\ Q_P$

where:

BOH_{SS}=as defined in 10.2.1 of this appendix
Q_{IN}=as defined in 11.2.8.1 of ANSI/ASHRAE Standard 103–1993
Q_P=as defined in 11.2.11 of ANSI/ASHRAE Standard 103–1993
8,760=as specified in 10.2.1 of this appendix

10.2.2.1 For furnaces or boilers equipped with either two stage or step modulating controls E_F is defined as:

$E_F=E_M + 4{,}600Q_P$

where:

E_M=as defined in 10.2.1.1 of this appendix
4,600=as specified in 11.4.12 of ANSI/ASHRAE Standard 103–1993
Q_P=as defined in 11.2.11 of ANSI/ASHRAE Standard 103–1993

10.2.3 *Average annual auxiliary electrical energy consumption for gas or oil fueled furnaces or boilers.* For furnaces or boilers equipped with single stage controls the average annual auxiliary electrical consumption (E_{AE}) is expressed in kilowatt-hours and defined as:

$E_{AE}=BOH_{SS}(y_PPE +y_{IG}PE_{IG}+yBE)$

where:

BOH_{SS}=as defined in 10.2.1 of this appendix
PE=as defined in 10.2.1 of this appendix
y_P=as defined in 10.2.1 of this appendix
y_{IG}=as defined in 10.2.1 of this appendix
PE_{IG}=as defined in 10.2.1 of this appendix
y=as defined in 10.2.1 of this appendix
BE=as defined in 10.2.1 of this appendix

10.2.3.1 For furnaces or boilers equipped with two stage controls E_{AE} is defined as:

$E_{AE}=BOH_R(y_PPE_R+y_{IG}PE_{IG}+yBE_R) + BOH_H(y_PPE_H+y_{IG}PE_{IG}+y\ BE_H)$

where:

BOH_R=as defined in 10.2.1.2 of this appendix
y_P=as defined in 10.2.1 of this appendix
PE_R=as defined in 9.1.2.2 and measured at the reduced fuel input rate, of ANSI/ASHRAE Standard 103–1993
y_{IG}=as defined in 10.2.1 of this appendix
PE_{IG}=as defined in 10.2.1 of this appendix
y=as defined in 10.2.1 of this appendix
BE_R=as defined in 9.1.2.2 of ANSI/ASHRAE Standard 103–1993, measured at the reduced fuel input rate
BOH_H=as defined in 10.2.1.3 of this appendix
PE_H=as defined in 9.1.2.2 of ANSI/ASHRAE Standard 103–1993, measured at the maximum fuel input rate
BE_H=as defined in 9.1.2.2 of ANSI/ASHRAE Standard 103–1993, measured at the maximum fuel input rate

10.2.3.2 For furnaces or boilers equipped with step modulating controls E_{AE} is defined as:

$E_{AE}=BOH_R(y_P PE_R+y_{IG}PE_{IG}+y\ BE_R)+BOH_M(y_PPE_H+y_{IG}PE_{IG}+y\ BE_H)$

where:

BOH_R=as defined in 10.2.1.2 of this appendix
y_P=as defined in 10.2.1 of this appendix
PE_R=as defined in 9.1.2.2 of ANSI/ASHRAE Standard 103–1993, measured at the reduced fuel input rate

y_{IG}=as defined in 10.2.1 of this appendix
PE_{IG}=as defined in 10.2.1 of this appendix
y=as defined in 10.2.1. of this appendix
BE_R=as defined in 9.1.2.2 of ANSI/ASHRAE Standard 103–1993, measured at the reduced fuel input rate
BOH_M=as defined in 10.2.1.4 of this appendix
PE_H=as defined in 9.1.2.2 of ANSI/ASHRAE Standard 103–1993, measured at the maximum fuel input rate
BE_H=as defined in 9.1.2.2 of ANSI/ASHRAE Standard 103–1993, measured at the maximum fuel inputs rate

10.3 *Average annual electric energy consumption for electric furnaces or boilers.* For electric furnaces and boilers the average annual energy consumption (E_E) is expressed in kilowatt-hours and defined as:

E_E=100(2,080)(0.77)DHR/(3.412 AFUE)

where:

100=to express a percent as a decimal
2,080=as specified in 10.2.1 of this appendix
0.77=as specified in 10.2.1 of this appendix
DHR=as defined in 10.2.1 of this appendix
3.412=conversion to express energy in terms of watt-hours instead of Btu
AFUE=as defined in 11.1 of ANSI/ASHRAE Standard 103–1993, in percent, and calculated on the basis of:
ICS installation, for non-weatherized warm air furnaces;
indoor installation, for non-weatherized boilers; or
outdoor installation, for furnaces and boilers that are weatherized.

10.4 *Energy factor.*

10.4.1 *Energy factor for gas or oil furnaces and boilers.* Calculate the energy factor, EF, for gas or oil furnaces and boilers defined as, in percent:

$$EF = \frac{\left(E_F - 4{,}600\ Q_P\right) Effy_{HS}}{E_F + 3{,}412\ E_{AE}}$$

where:

E_F=average annual fuel consumption as defined in 10.2.2 of this appendix.
E_{AE}=as defined in 10.2.3 of this appendix.
$Effy_{HS}$=Annual Fuel Utilization Efficiency as defined in 11.2.11, 11.3.11, 11.4.11 or 11.5.11 of ANSI/ASHRAE Standard 103–1993, in percent, and calculated on the basis of:
ICS installation, for non-weatherized warm air furnaces;
indoor installation, for non-weatherized boilers; or
outdoor installation, for furnaces and boilers that are weatherized.
3,412=conversion factor from kilowatt to Btu/h

10.4.2 *Energy factor for electric furnaces and boilers.* The energy factor, EF, for electric furnaces and boilers is defined as:

EF=AFUE

where:

AFUE=Annual Fuel Utilization Efficiency as defined in section 10.3 of this appendix, in percent

10.5 *Average annual energy consumption for furnaces and boilers located in a different geographic region of the United States and in buildings with different design heating requirements.*

10.5.1 *Average annual fuel energy consumption for gas or oil-fueled furnaces and boilers located in a different geographic region of the United States and in buildings with different design heating requirements.* For gas or oil-fueled furnaces and boilers the average annual fuel energy consumption for a specific geographic region and a specific typical design heating requirement (E_{FR}) is expressed in Btu per year and defined as:

$E_{FR}=(E_F-8{,}760\ Q_P)(HLH/2{,}080)+8{,}760\ Q_P$

where:

E_F=as defined in 10.2.2 of this appendix
8,760=as specified in 10.2.1 of this appendix
Q_P=as defined in 11.2.11 of ANSI/ASHRAE Standard 103–1993
HLH=heating load hours for a specific geographic region determined from the heating load hour map in Figure 1 of this appendix
2,080=as defined in 10.2.1 of this appendix

10.5.2 *Average annual auxiliary electrical energy consumption for gas or oil-fueled furnaces and boilers located in a different geographic region of the United States and in buildings with different design heating requirements.* For gas or oil-fueled furnaces and boilers the average annual auxiliary electrical energy consumption for a specific geographic region and a specific typical design heating requirement (E_{AER}) is expressed in kilowatt-hours and defined as:

$E_{AER}=E_{AE}$ (HLH/2,080)

where:

E_{AE}=as defined in 10.2.3 of this appendix
HLH=as defined in 10.5.1 of this appendix
2,080=as specified in 10.2.1 of this appendix

10.5.3 *Average annual electric energy consumption for electric furnaces and boilers located in a different geographic region of the United States and in buildings with different design heating requirements.* For electric furnaces and boilers the average annual electric energy consumption for a specific geographic region and a specific typical design heating requirement (E_{ER}) is expressed in kilowatt-hours and defined as:

E_{ER}=100 (0.77) DHR HLH/(3.412 AFUE)

where:

100=as specified in 10.3 of this appendix
0.77=as specified in 10.2.1 of this appendix

DHR=as defined in 10.2.1 of this appendix
HLH=as defined in 10.5.1 of this appendix
3.412=as specified in 10.3 of this appendix
AFUE=as defined in 10.3 of this appendix, in percent

10.6 *Annual energy consumption for mobile home furnaces*

10.6.1 *National average number of burner operating hours for mobile home furnaces (BOH_{SS}).* BOH_{SS} is the same as in 10.2.1 of this appendix, except that the value of $Effy_{HS}$ in the calculation of the burner operating hours, BOH_{SS}, is calculated on the basis of a direct vent unit with system number 9 or 10.

10.6.2 *Average annual fuel energy for mobile home furnaces (E_F).* E_F is same as in 10.2.2 of this appendix except that the burner operating hours, BOH_{SS}, is calculated as specified in 10.6.1 of this appendix.

10.6.3 *Average annual auxiliary electrical energy consumption for mobile home furnaces (E_{AE}).* E_{AE} is the same as in 10.2.3 of this appendix, except that the burner operating hours, BOH_{SS}, is calculated as specified in 10.6.1 of this appendix.

10.7 *Calculation of sales weighted average annual energy consumption for mobile home furnaces.* In order to reflect the distribution of mobile homes to geographical regions with average HLH_{MHF} value different from 2,080, adjust the annual fossil fuel and auxiliary electrical energy consumption values for mobile home furnaces using the following adjustment calculations.

10.7.1 For mobile home furnaces the sales weighted average annual fossil fuel energy consumption is expressed in Btu per year and defined as:

$$E_{F,MHF}=(E_F-8{,}760\ Q_P)HLH_{MHF}/2{,}080+8{,}760\ Q_P$$

where:

E_F=as defined in 10.6.2 of this appendix
8,760=as specified in 10.2.1 of this appendix
Q_P=as defined in 11.2.11 of ANSI/ASHRAE Standard 103–1993
HLH_{MHF}=1880, sales weighted average heating load hours for mobile home furnaces
2,080=as specified in 10.2.1 of this appendix

10.7.2 For mobile home furnaces the sales weighted average annual auxiliary electrical energy consumption is expressed in kilowatt-hours and defined as:

$$E_{AE,MHF}=E_{AE}HLH_{MHF}/2{,}080$$

where:

E_{AE}=as defined in 10.6.3 of this appendix
HLH_{MHF}=as defined in 10.7.1 of this appendix
2,080=as specified in 10.2.1 of this appendix

10.8 *Direct determination of off-cycle losses for furnaces and boilers equipped with thermal stack dampers.* [Reserved.]

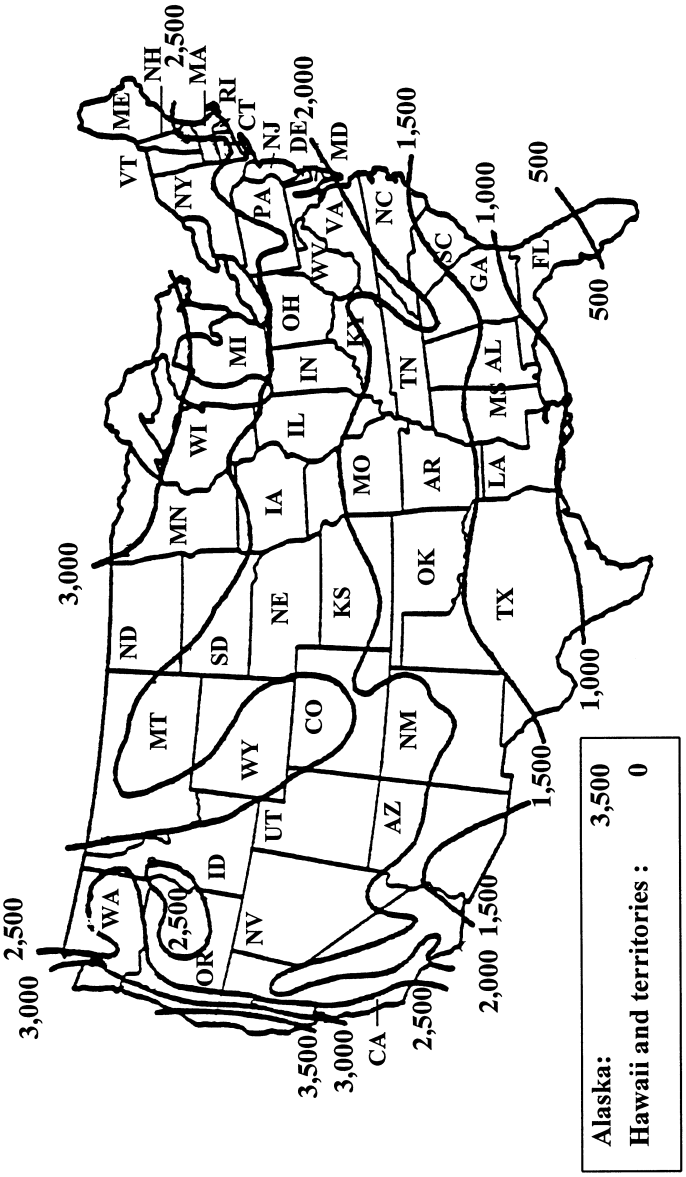

This map is reasonably accurate for most parts of the United States but is necessarily generalized, and consequently not too accurate in mountainous regions, particularly in the rockies.

FIGURE 1 - HEATING LOAD HOURS (HLH) FOR THE UNITED STATES

[62 FR 26157, May 12, 1997, as amended at 62 FR 53510, Oct. 14, 1997]

APPENDIX O TO SUBPART B OF PART 430—UNIFORM TEST METHOD FOR MEASURING THE ENERGY CONSUMPTION OF VENTED HOME HEATING EQUIPMENT

1.0 Definitions

1.1 ''Air shutter'' means an adjustable device for varying the size of the primary air inlet(s) to the combustion chamber power burner.

1.2 ''Air tube'' means a tube which carries combustion air from the burner fan to the burner nozzle for combustion.

1.3 ''Barometic draft regulator or barometric damper'' means a mechanical device designed to maintain a constant draft in a vented heater.

1.4 ''Draft hood'' means an external device which performs the same function as an integral draft diverter, as defined in section 1.17 of this appendix.

1.5 ''Electro-mechanical stack damper'' means a type of stack damper which is operated by electrical and/or mechanical means.

1.6 ''Excess air'' means air which passes through the combustion chamber and the vented heater flues in excess of that which is theoretically required for complete combustion.

1.7 ''Flue'' means a conduit between the flue outlet of a vented heater and the integral draft diverter, draft hood, barometric damper or vent terminal through which the flue gases pass prior to the point of draft relief.

1.8 ''Flue damper'' means a device installed between the furnace and the integral draft diverter, draft hood, barometric draft regulator, or vent terminal which is not equipped with a draft control device, designed to open the venting system when the appliance is in operation and to close the venting system when the appliance is in a standby condition.

1.9 ''Flue gases'' means reaction products resulting from the combustion of a fuel with the oxygen of the air, including the inerts and any excess air.

1.10 ''Flue losses'' means the sum of sensible and latent heat losses above room temperature of the flue gases leaving a vented heater.

1.11 ''Flue outlet'' means the opening provided in a vented heater for the exhaust of the flue gases from the combustion chamber.

1.12 ''Heat input'' (Q_{in}) means the rate of energy supplied in a fuel to a vented heater operating under steady-state conditions, expressed in Btu's per hour. It includes any input energy to the pilot light and is obtained by multiplying the measured rate of fuel consumption by the measured higher heating value of the fuel.

1.13 ''Heating capacity'' (Q_{out}) means the rate of useful heat output from a vented heater, operating under steady-state conditions, expressed in Btu's per hour. For room and wall heaters, it is obtained by multiplying the ''heat input'' (Q_{in}) by the steady-state efficency (η_{ss}) divided by 100. For floor furnaces, it is obtained by multiplying (A) the ''heat input'' (Q_{in}) by (B) the steady-state efficiency divided by 100, minus the quantity (2.8) (L_j) divided by 100, where L_j is the jacket loss as determined in section 3.2 of this appendix.

1.14 ''Higher heating value'' (HHV) means the heat produced per unit of fuel when complete combustion takes place at constant pressure and the products of combustion are cooled to the initial temperature of the fuel and air and when the water vapor formed during combustion is condensed. The higher heating value is usually expressed in Btu's per pound, Btu's per cubic foot for gaseous fuel, or Btu's per gallon for liquid fuel.

1.15 ''Induced draft'' means a method of drawing air into the combustion chamber by mechanical means.

1.16 ''Infiltration parameter'' means that portion of unconditioned outside air drawn into the heated space as a consequence of loss of conditioned air through the exhaust system of a vented heater.

1.17 ''Integral draft diverter'' means a device which is an integral part of a vented heater, designed to: (1) Provide for the exhaust of the products of combustion in the event of no draft, back draft, or stoppage beyond the draft diverter, (2) prevent a back draft from entering the vented heater, and (3) neutralize the stack action of the chimney or gas vent upon the operation of the vented heater.

1.18 ''Manually controlled vented heaters'' means either gas or oil fueled vented heaters equipped without thermostats.

1.19 ''Modulating control'' means either a step-modulating or two-stage control.

1.20 ''Power burner'' means a vented heater burner which supplies air for combustion at a pressure exceeding atmospheric pressure, or a burner which depends on the draft induced by a fan incorporated in the furnace for proper operation.

1.21 ''Reduced heat input rate'' means the factory adjusted lowest reduced heat input rate for vented home heating equipment equipped with either two stage thermostats or step-modulating thermostats.

1.22 ''Single stage thermostat'' means a thermostat that cycles a burner at the maximum heat input rate and off.

1.23 ''Stack'' means the portion of the exhaust system downstream of the integral draft diverter, draft hood or barometric draft regulator.

1.24 ''Stack damper'' means a device installed downstream of the integral draft diverter, draft hood, or barometric draft regulator, designed to open the venting system when the appliance is in operation and to

close off the venting system when the appliance is in the standby condition.

1.25 ''Stack gases'' means the flue gases combined with dilution air that enters at the integral draft diverter, draft hood or barometric draft regulator.

1.26 ''Steady-state conditions for vented home heating equipment'' means equilibrium conditions as indicated by temperature variations of not more than 5 °F (2.8C) in the flue gas temperature for units equipped with draft hoods, barometric draft regulators or direct vent systems, in three successive readings taken 15 minutes apart or not more than 3 °F (1.7C) in the stack gas temperature for units equipped with integral draft diverters in three successive readings taken 15 minutes apart.

1.27 ''Step-modulating control'' means a control that either cycles off and on at the low input if the heating load is light, or gradually, increases the heat input to meet any higher heating load that cannot be met with the low firing rate.

1.28 ''Thermal stack damper'' means a type of stack damper which is dependent for operation exclusively upon the direct conversion of thermal energy of the stack gases into movement of the damper plate.

1.29 ''Two stage control'' means a control that either cycles a burner at the reduced heat input rate and off or cycles a burner at the maximum heat input rate and off.

1.30 ''Vaporizing-type oil burner'' means a device with an oil vaporizing bowl or other receptacle designed to operate by vaporizing liquid fuel oil by the heat of combustion and mixing the vaporized fuel with air.

1.31 ''Vent/air intake terminal'' means a device which is located on the outside of a building and is connected to a vented heater by a system of conduits. It is composed of an air intake terminal through which the air for combustion is taken from the outside atmosphere and a vent terminal from which flue gases are discharged.

1.32 ''Vent limiter'' means a device which limits the flow of air from the atmospheric diaphragm chamber of a gas pressure regulator to the atmosphere. A vent limiter may be a limiting orifice or other limiting device.

1.33 ''Vent pipe'' means the passages and conduits in a direct vent system through which gases pass from the combustion chamber to the outdoor air.

2.0 Testing conditions.

2.1 *Installation of test unit.*

2.1.1 *Vented wall furnaces (including direct vent systems).* Install gas fueled vented wall furnaces for test as specified in sections 2.1.3 and 2.1.4 of ANSI Z21.49–1975. Install gas fueled wall furnaces with direct vent systems for test as described in sections 2.1.3 and 2.1.4 of ANSI Z21.44–1973. Install oil fueled vented wall furnaces as specified in UL–730–1974, section 33. Install oil fueled vented wall furnaces with direct vent systems as specified in UL–730–1974, section 34.

2.1.2 *Vented floor furnaces.* Install vented floor furnaces for test as specified in sections 35.1 through 35.5 of UL–729–1976.

2.1.3 *Vented room heaters.* Install in accordance with manufacturer's instructions.

2.2 *Flue and stack requirements.*

2.2.1 *Gas fueled vented home heating equipment employing integral draft diverters and draft hoods (excluding direct vent systems).* Attach to, and vertically above the outlet of gas fueled vented home heating equipment employing draft diverters or draft hoods with vertically discharging outlets, a five (5) foot long test stack having a cross sectional area the same size as the draft diverter outlet.

Attach to the outlet of vented heaters having a horizontally discharging draft diverter or draft hood outlet a 90 degree elbow, and a five (5) foot long vertical test stack. A horizontal section of pipe may be used on the floor furnace between the diverter and the elbow if necessary to clear any framing used in the installation. Use the minimum length of pipe possible for this section. Use stack, elbow, and horizontal section with same cross sectional area as the diverter outlet.

2.2.2 *Oil fueled vented home heating equipment (excluding direct vent systems).* Use flue connections for oil fueled vented floor furnaces as specified in section 35 of UL 729–1976, sections 34.10 through 34.18 of UL 730–1974 for oil fueled vented wall furnaces and sections 36.2 and 36.3 of UL 896–1973 for oil fueled vented room heaters.

2.2.3 *Direct vent systems.* Have the exhaust/air intake system supplied by the manufacturer in place during all tests. Test units intended for installation with a variety of vent pipe lengths with the minimum length recommended by the manufacturer. Do not connect a heater employing a direct vent system to a chimney or induced draft source. Vent the gas solely on the provision for venting incorporated in the heater and the vent/air intake system supplied with it.

2.3 *Fuel supply.*

2.3.1 *Natural gas.* For a vented heater utilizing natural gas, maintain the gas supply to the unit under test at a normal inlet test pressure immediately ahead of all controls at 7 to 10 inches water column. Maintain the regulator outlet pressure at normal test pressure approximately at that recommended by the manufacturer. Use natural gas having a specific gravity of approximately 0.65 and a higher heating value within ±5 percent of 1,025 Btu's per standard cubic foot. Determine the actual higher heating value in Btu's per standard cubic foot for the natural gas to be used in the test with an error no greater than one percent.

2.3.2 *Propane gas.* For a vented heater utilizing propane gas, maintain the gas supply

to the unit under test at a normal inlet pressure of 11 to 13 inches water column and a specific gravity of approximately 1.53. Maintain the regulator outlet pressure, on units so equipped, approximately at that recommended by the manufacturer. Use propane having a specific gravity of approximately 1.53 and a higher heating value within ±5 percent of 2,500 Btu's per standard cubic foot. Determine the actual higher heating value in Btu's per standard cubic foot for the propane to be used in the test with an error no greater than one percent.

2.3.3 *Other test gas.* Use other test gases with characteristics as described in section 2.2, table VII, of ANSI Standard Z21.11.1–1974. Use gases with a measured higher heating value within ±5 percent of the values specified in the above ANSI standard. Determine the actual higher heating value of the gas used in the test with an error no greater than one percent.

2.3.4 *Oil supply.* For a vented heater utilizing fuel oil, use No. 1, fuel oil (kerosene) for vaporizing-type burners and either No. 1 or No. 2 fuel oil, as specified by the manufacturer, for mechanical atomizing type burners. Use No. 1 fuel oil with a viscosity meeting the specifications as specified in UL–730–1974, section 36.9. Use test fuel conforming to the specifications given in tables 2 and 3 of ANSI Standard Z91.1–1972
for No. 1 and No. 2 fuel oil. Measure the higher heating value of the test fuel with an error no greater than one percent.

2.3.5 *Electrical supply.* For auxiliary electric components of a vented heater, maintain the electrical supply to the test unit within one percent of the nameplate voltage for the entire test cycle. If a voltage range is used for nameplate voltage, maintain the electrical supply within one percent of the midpoint of the nameplate voltage range.

2.4 *Burner adjustments.*

2.4.1 *Gas burner adjustments.* Adjust the burners of gas fueled vented heaters to their maximum Btu ratings at the test pressure specified in section 2.3 of this appendix. Correct the burner volumetric flow rate to 60 °F (15.6C) and 30 inches of mercury barometric pressure, set the fuel flow rate to obtain a heat rate of within ±2 percent of the hourly Btu rating specified by the manufacturer as measured after 15 minutes of operation starting with all parts of the vented heater at room temperature. Set the primary air shutters in accordance with the manufacturer's recommendations to give a good flame at this adjustment. Do not allow the deposit of carbon during any test specified herein.

If a vent limiting means is provided on a gas pressure regulator, have it in place during all tests.

For gas fueled heaters with modulating controls adjust the controls to operate the heater at the maximum fuel input rate. Set the thermostat control to the maximum setting. Start the heater by turning the safety control valve to the ''on'' position. In order to prevent modulation of the burner at maximum input, place the thermostat sensing element in a temperature control bath which is held at a temperature below the maximum set point temperature of the control.

For gas fueled heaters with modulating controls adjust the controls to operate the heater at the reduced fuel input rate. Set the thermostat control to the minimum setting. Start the heater by turning the safety control valve to the ''on'' position. If ambient test room temperature is above the lowest control set point temperature, initiate burner operation by placing the thermostat sensing element in a temperature control bath that is held at a temperature below the minimum set point temperature of the control.

2.4.2 *Oil burner adjustments.* Adjust the burners of oil fueled vented heaters to give the CO_2 reading recommended by the manufacturer and an hourly Btu input, during the steady-state performance test described below, which is within ±2 percent of the heater manufacturer's specified normal hourly Btu input rating. On units employing a power burner do not allow smoke in the flue to exceed a No. 1 smoke during the steady-state performance test as measured by the procedure in ANSI Standard Z11.182–1965 (R1971) (ASTM D 2156–65 (1970)). If, on units employing a power burner, the smoke in the flue exceeds a No. 1 smoke during the steady-state test, readjust the burner to give a lower smoke reading, and, if necessary a lower CO_2 reading, and start all tests over. Maintain the average draft over the fire and in the flue during the steady-state performance test at that recommended by the manufacturer within ±0.005 inches of water gauge. Do not make additional adjustments to the burner during the required series of performance tests. The instruments and measuring apparatus for this test are described in section 6.3 of ANSI standard Z91.1–1972.

2.5 *Circulating air adjustments.*

2.5.1 *Forced air vented wall furnaces (including direct vent systems).* During tests maintain the air flow through the heater as specified by the manufacturer and operate the vented heater with the outlet air temperature between 80 °F and 130 °F above room temperature. If adjustable air discharge registers are provided, adjust them so as to provide the maximum possible air restriction. Measure air discharge temperature as specified in section 2.14 of ANSI Z21.49–1975.

2.5.2 *Fan type vented room heaters and floor furnaces.* During tests on fan type furnaces and heaters, adjust the air flow through the heater as specified by the manufacturer. If adjustable air discharge registers are provided, adjust them to provide the maximum possible air restriction.

2.6 *Location of temperature measuring instrumentation.*

2.6.1 *Gas fueled vented home heating equipment (including direct vent systems).* For units employing an integral draft diverter, install nine thermocouples, wired in parallel, in a horizontal plane in the five foot test stack located one foot from the test stack inlet. Equalize the length of all thermocouple leads before paralleling. Locate one thermocouple in the center of the stack. Locate eight thermocouples along imaginary lines intersecting at right angles in this horizontal plane at points one third and two thirds of the distance between the center of the stack and the stack wall.

For units which employ a direct vent system, locate at least one thermocouple at the center of each flue way exiting the heat exchanger. Provide radiation shields if the thermocouples are exposed to burner radiation.

For units which employ a draft hood or units which employ a direct vent system which does not significantly preheat the incoming combustion air, install nine thermocouples, wired in parallel, in a horizontal plane located within 12 inches (304.8 mm) of the heater outlet and upstream of the draft hood on units so equipped. Locate one thermocouple in the center of the pipe and eight thermocouples along imaginary lines intersecting at right angles in this horizontal plane at points one third and two thirds of the distance between the center of the pipe and the pipe wall.

For units which employ direct vent systems that significantly preheat the incoming combustion air, install nine thermocouples, wired in parallel, in a plane parallel to and located within 6 inches (152.4 mm) of the vent/air intake terminal. Equalize the length of all thermocouple leads before paralleling. Locate one thermocouple in the center of the vent pipe and eight thermocouples along imaginary lines intersecting at right angles in this plane at points one third and two thirds of the distance between the center of the flue pipe and the pipe wall.

Use bead-type thermocouples having wire size not greater than No. 24 American Wire Gauge (AWG). If there is a possibility that the thermocouples could receive direct radiation from the fire, install radiation shields on the fire side of the thermocouples only and position the shields so that they do not touch the thermocouple junctions.

Install thermocouples for measuring conditioned warm air temperature as described in ANSI Z21.49–1975, section 2.14. Establish the temperature of the inlet air by means of single No. 24 AWG bead-type thermocouple, suitably shielded from direct radiation and located in the center of the plane of each inlet air opening.

2.6.2 *Oil fueled vented home heating equipment (including direct vent systems).* Install nine thermocouples, wired in parallel and having equal length leads, in a plane perpendicular to the axis of the flue pipe. Locate this plane at the position shown in Figure 34.4 of UL 730–1974, or Figures 35.1 and 35.2 of UL 729–1976 for a single thermocouple, except that on direct vent systems which significantly preheat the incoming combustion air, it shall be located within 6 inches (152.5 mm) of the outlet of the vent/air intake terminal. Locate one thermocouple in the center of the flue pipe and eight thermocouples along imaginary lines intersecting at right angles in this plane at points one third and two thirds of the distance between the center of the pipe and pipe wall.

Use bead-type thermocouples having a wire size not greater than No. 24 AWG. If there is a possibility that the thermocouples could receive direct radiation from the fire, install radiation shields on the fire side of the thermocouples only and position the shields so that they do not touch the thermocouple junctions.

Install thermocouples for measuring the conditioned warm air temperature as described in sections 35.12 through 35.17 of UL 730–1974. Establish the temperature of the inlet air by means of a single No. 24 AWG bead-type thermocouple, suitably shielded from direct radiation and located in the center of the plane of each inlet air opening.

2.7 *Combustion measurement instrumentation.* Analyze the samples of stack and flue gases for vented heaters to determine the concentration by volume of carbon dioxide present in the dry gas with instrumentation which will result in a reading having an accuracy of ±0.1 percentage points.

2.8 *Energy flow instrumentation.* Install one or more instruments, which measure the rate of gas flow or fuel oil supplied to the vented heater, and if appropriate, the electrical energy with an error no greater than one percent.

2.9 *Room ambient temperature.* During the time period required to perform all the testing and measurement procedures specified in section 3.0 of this appendix, maintain the room temperature within ±5 °F (±2.8C) of the value T_{RA} measured during the steady-state performance test. At no time during these tests shall the room temperature exceed 100 °F (37.8C) or fall below 65 °F (18.3C).

Temperature (T_{RA}) shall be the arithmetic average temperature of the test area, determined by measurement with four No. 24 AWG bead-type thermocouples with junctions shielded against radiation, located approximately at 90-degree positions on a circle circumscribing the heater or heater enclosure under test, in a horizontal plane approximately at the vertical midpoint of the appliance or test enclosure, and with the junctions approximately 24 inches from sides of the heater or test enclosure and located so as not to be affected by other than room air. Locate a thermocouple at each elevation of draft relief inlet opening and combustion air

inlet opening at a distance of approximately 24 inches from the inlet openings. The temperature of the air for combustion and the air for draft relief shall not differ more than ±5 °F from room temperature as measured above.

2.10 *Equipment used to measure mass flow rate in flue and stack.* The tracer gas chosen for this task should have a density which is less than or approximately equal to the density of air. Use a gas unreactive with the environment to be encountered. Using instrumentation of either the batch or continuous type, measure the concentration of tracer gas with an error no greater than 2 percent of the value of the concentration measured.

3.0 Testing and measurements.

3.1 *Steady-state testing.*

3.1.1 *Gas fueled vented home heating equipment (including direct vent systems).* Set up the vented heater as specified in sections 2.1, 2.2, and 2.3 of this appendix. The draft diverter shall be in the normal open condition and the stack shall not be insulated. (Insulation of the stack is no longer required for the vented heater test.) Begin the steady-state performance test by operating the burner and the circulating air blower, on units so equipped, with the adjustments specified by sections 2.4.1 and 2.5 of this appendix, until steady-state conditions are attained as indicated by a temperature variation of not more than 3 °F (1.7 C) in the stack gas temperature for vented heaters equipped with draft diverters or 5 °F (2.8 C) in the flue gas temperature for vented heaters equipped with either draft hoods or direct vent systems; in three successive readings taken 15 minutes apart.

On units employing draft diverters, measure the room temperature (T_{RA}) as described in section 2.9 of this appendix and measure the steady-state stack gas temperature ($T_{S,SS}$) using the nine thermocouples located in the 5 foot test stack as specified in section 2.6.1 of this appendix. Secure a sample of the stack gases in the plane where $T_{S,SS}$ is measured or within 3.5 feet downstream of this plane. Determine the concentration by volume of carbon dioxide (X_{CO2S}) present in the dry stack gas. If the location of the gas sampling differs from the temperature measurement plane, there shall be no air leaks through the stack between these two locations.

On units employing draft hoods or direct vent systems, measure the room temperature (T_{RA}) as described in section 2.9 of this appendix and measure the steady-state flue gas temperature ($T_{F,SS}$), using the nine thermocouples located in the flue pipe as described in section 2.6.1 of this appendix. Secure a sample of the flue gas in the plane of temperature measurement and determine the concentration by volume of CO_2 (X_{CO2F}) present in dry flue gas. In addition, for units employing draft hoods, secure a sample of the stack gas in a horizontal plane in the five foot test stack located one foot from the test stack inlet; and determine the concentration by volume of CO_2 (X_{CO2S}) present in dry stack gas.

Determine the steady-state heat input rate (Q_{in}) including pilot gas by multiplying the measured higher heating value of the test gas by the steady-state gas input rate corrected to standard conditions of 60 °F and 30 inches of mercury. Use measured values of gas temperature and pressure at the meter and the barometric pressure to correct the metered gas flow rate to standard conditions.

After the above test measurements have been completed on units employing draft diverters, secure a sample of the flue gases at the exit of the heat exchanger(s) and determine the concentration of CO_2 (X_{CO2F}) present. In obtaining this sample of flue gas, move the sampling probe around or use a sample probe with multiple sampling ports in order to assure that an average value is obtained for the CO_2 concentration. For units with multiple heat exchanger outlets, measure the CO_2 concentration in a sample from each outlet to obtain the average CO_2 concentration for the unit. A manifold (parallel connected sampling tubes) may be used to obtain this sample.

For heaters with single stage thermostat control (wall mounted electric thermostats), determine the steady-state efficiency at the maximum fuel input rate as specified in section 2.4 of this appendix.

For gas fueled vented heaters equipped with either two stage thermostats or step-modulating thermostats, determine the steady-state efficiency at the maximum fuel input rate, as specified in section 2.4.1 of this appendix, and at the reduced fuel input rate, as specified in section 2.4.1 of this appendix.

For manually controlled gas fueled vented heaters, with various input rates determine the steady-state efficiency at a fuel input rate that is within ±5 percent of 50 percent of the maximum fuel input rate. If the heater is designed to use a control that precludes operation at other than maximum output (single firing rate) determine the steady state efficiency at the maximum input rate only.

3.1.2 *Oil fueled vented home heating equipment (including direct vent systems).* Set up and adjust the vented heater as specified in sections 2.1, 2.2, and 2.3.4 of this appendix. Begin the steady-state performance test by operating the burner and the circulating air blower, on units so equipped, with the adjustments specified by sections 2.4.2 and 2.5 of this appendix until steady-state conditions are attained as indicated by a temperature variation of not more than 5 °F (2.8 C) in the flue gas temperature in three successive readings taken 15 minutes apart.

Do not allow smoke in the flue, for units equipped with power burners, to exceed a No. 1 smoke during the steady-state performance test as measured by the procedure described in ANSI standard Z11.182–1965 (R1971) (ASTM D 2156–65 (1970)). Maintain the average draft over the fire and in the breeching during the steady-state performance test at that recommended by the manufacturer ±0.005 inches of water gauge.

Measure the room temperature (T_{RA}) as described in section 2.9 of this appendix and measure the steady-state flue gas temperature ($T_{F,SS}$) using nine thermocouples located in the flue pipe as described in section 2.6.2 of this appendix. Secure a sample of the flue gas in the plane of temperature measurement and determine the concentration by volume of CO_2(X_{CO2F}) present in dry flue gas. Measure and record the steady-state heat input rate (Q_{in}).

For manually controlled oil fueled vented heaters, determine the steady-state efficiency at a fuel input rate that is within ±5 percent of 50 percent of the maximum fuel input rate.

3.1.3 *Auxiliary Electric Power Measurement.* Allow the auxiliary electrical system of a gas or oil vented heater to operate for at least five minutes before recording the maximum auxiliary electric power measurement from the wattmeter. Record the maximum electric power (P_E) expressed in kilowatts. For vented heaters with modulating controls, the recorded (P_E) shall be maximum measured electric power multiplied by the following factor (R). For two stage controls, R=1.3. For step modulating controls, R=1.4 when the ratio of minimum-to-maximum fuel input is greater than or equal to 0.7, R=1.7 when the ratio of minimum-to-maximum fuel input is less than 0.7 and greater than or equal to 0.5, and R=2.2 when the ratio of minimum-to-maximum fuel input is less than 0.5.

3.2 *Jacket loss measurement.* Conduct a jacket loss test for vented floor furnaces. Measure the jacket loss (L_j) in accordance with the ANSI standard Z21.48–1976 section 2.12.

3.3 *Measurement of the off-cycle losses for vented heaters equipped with thermal stack dampers.* Install the thermal stack damper according to the manufacturer's instructions. Unless specified otherwise, the thermal stack damper should be at the draft diverter exit collar. Attach a five foot length of bare stack to the outlet of the damper. Install thermocouples as specified in section 2.6.1 of this appendix.

For vented heaters equipped with single stage thermostats, measure the off-cycle losses at the maximum fuel input rate. For vented heaters equipped with two stage thermostats, measure the off-cycle losses at the maximum fuel input rate and at the reduced fuel input rate. For vented heaters equipped with step-modulating thermostats, measure the off-cycle losses at the reduced fuel input rate.

Let the vented heater heat up to a steady-state condition. Feed a tracer gas at a constant metered rate into the stack directly above and within one foot above the stack damper. Record tracer gas flow rate and temperature. Measure the tracer gas concentration in the stack at several locations in a horizontal plane through a cross section of the stack at a point sufficiently above the stack damper to ensure that the tracer gas is well mixed in the stack.

Continuously measure the tracer gas concentration and temperature during a 10 minute cool down period. Shut the burner off and immediately begin measuring tracer gas concentration in the stack, stack temperature, room temperature, and barometric pressure. Record these values as the midpoint of each one-minute interval between burner shut down and ten minutes after burner shut down. Meter response time and sampling delay time shall be considered in timing these measurements.

3.4 *Measurement of the effectiveness of electro-mechanical stack dampers.* For vented heaters equipped with electro-mechanical stack dampers, measure the cross sectional area of the stack (A_s), the net area of the damper plate (A_o), and the angle that the damper plate makes when closed with a plane perpendicular to the axis of the stack (Ω). The net area of the damper plate means the area of the damper plate minus the area of any holes through the damper plate.

3.5 *Pilot light measurement.*

3.5.1 Measure the energy input rate to the pilot light (Q_P) with an error no greater than 3 percent for vented heaters so equipped.

3.5.2 For manually controlled heaters where the pilot light is designed to be turned off by the user when the heater is not in use, that is, turning the control to the OFF position will shut off the gas supply to the burner(s) and to the pilot light, the measurement of Q_P is not needed. This provision applies only if an instruction to turn off the unit is provided on the heater near the gas control valve (e.g. by label) by the manufacturer.

3.6 *Optional procedure for determining* D_P, D_F, and D_s *for systems for all types of vented heaters.* For all types of vented heaters, D_P, D_F, and D_S can be measured by the following optional cool down test.

Conduct a cool down test by letting the unit heat up until steady-state conditions are reached, as indicated by temperature variation of not more than 5 °F (2.8 °C) in the flue gas temperature in three successive readings taken 15 minutes apart, and then shutting the unit off with the stack or flue damper controls by-passed or adjusted so that the stack or flue damper remains open during the resulting cool down period. If a

draft was maintained on oil fueled units in the flue pipe during the steady-state performance test described in section 3.1 of this appendix, maintain the same draft (within a range of −.001 to +.005 inches of water gauge of the average steady-state draft) during this cool down period.

Measure the flue gas mass flow rate ($m_{F,OFF}$) during the cool down test described above at a specific off-period flue gas temperature and corrected to obtain its value at the steady-state flue gas temperature ($T_{F,SS}$), using the procedure described below.

Within one minute after the unit is shut off to start the cool down test for determining D_F, begin feeding a tracer gas into the combustion chamber at a constant flow rate of V_T, and at a point which will allow for the best possible mixing with the air flowing through the chamber. (On units equipped with an oil fired power burner, the best location for injecting this tracer gas appears to be through a hole drilled in the air tube.) Periodically measure the value of V_T with an instantaneously reading flow meter having an accuracy of ±3 percent of the quantity measured. Maintain V_T at less than 1 percent of the air flow rate through the furnace. If a combustible tracer gas is used, there should be a delay period between the time the burner gas is shut off and the time the tracer gas is first injected to prevent ignition of the tracer gas.

Between 5 and 6 minutes after the unit is shut off to start the cool down test, measure at the exit of the heat exchanger the average flue gas temperature, $T^*_{F,Off}$. At the same instant the flue gas temperature is measured, also measure the percent volumetric concentration of tracer gas C_T in the flue gas in the same plane where $T^*_{F,Off}$ is determined. Obtain the concentration of tracer gas using an instrument which will result in an accuracy of ±2 percent in the value of C_T measured. If use of a continuous reading type instrument results in a delay time between drawing of a sample and its analysis, this delay should be taken into account so that the temperature measurement and the measurement of tracer gas concentration coincide. In addition, determine the temperature of the tracer gas entering the flow meter (T_T) and the barometric pressure (P_B).

The rate of the flue gas mass flow through the vented heater and the factors D_P, D_F, and D_S are calculated by the equations in sections 4.5.1 through 4.5.3 of this appendix.

4.0 Calculations.

4.1 *Annual fuel utilization efficiency for gas or oil fueled vented home heating equipment equipped without manual controls and without thermal stack dampers.* The following procedure determines the annual fuel utilization efficiency for gas or oil fueled vented home heating equipment equipped without manual controls and without thermal stack dampers.

4.1.1 *System number.* Obtain the system number from Table 1 of this appendix.

4.1.2 *Off-cycle flue gas draft factor.* Based on the system number, determine the off-cycle flue gas draft factor (D_F) from Table 1 of this appendix.

4.1.3 *Off-cycle stack gas draft factor.* Based on the system number, determine the off-cycle stack gas draft factor (D_s) from Table 1 of this appendix.

4.1.4 *Pilot fraction.* Calculate the pilot fraction (P_F) expressed as a decimal and defined as:

$$P_F = Q_P/Q_{in}$$

where:

Q_P= as defined in 3.5 of this appendix

Q_{in}= as defined in 3.1 of this appendix at the maximum fuel input rate

4.1.5 *Jacket loss for floor furnaces.* Determine the jacket loss (L_j) expressed as a percent and measured in accordance with section 3.2 of this appendix. For other vented heaters L_j=0.0.

4.1.6 *Latent heat loss.* Based on the fuel, obtain the latent heat loss ($L_{L,A}$) from Table 2 of this appendix.

4.1.7 *Ratio of combustion air mass flow rate to stoichiometric air mass flow rate.* Determine the ratio of combustion air mass flow rate to stoichiometric air mass flow rate ($R_{T,F}$), and defined as:

$$R_{T,F}=A+B/X_{CO2F}$$

where:

A=as determined from Table 2 of this appendix

B=as determined from Table 2 of this appendix

X_{CO2F}=as defined in 3.1 of this appendix

4.1.8 *Ratio of combustion and relief air mass flow rate to stoichiometric air mass flow rate.* For vented heaters equipped with either an integral draft diverter or a drafthood, determine the ratio of combustion and relief air mass flow rate to stoichiometric air mass flow rate ($R_{T,S}$), and defined as:

$$R_{T,S}=A+[B/X_{CO2S}]$$

where:

A=as determined from Table 2 of this appendix

B=as determined from Table 2 of this appendix

X_{CO2S}=as defined in 3.1 of this appendix

4.1.9 *Sensible heat loss at steady-state operation.* For vented heaters equipped with either an integral draft diverter or a draft hood, determine the sensible heat loss at steady-state operation ($L_{S,SS,A}$) expressed as a percent and defined as:

where:

$$L_{S,SS,A}=C(R_{T,S}+D)(T_{S,SS}-T_{RA})$$

C=as determined from Table 2 of this appendix
$R_{T,S}$=as defined in 4.1.8 of this appendix
D=as determined from Table 2 of this appendix
$T_{S,SS}$=as defined in 3.1 of this appendix
T_{RA}=as defined in 2.9 of this appendix

For vented heaters equipped without an integral draft diverter, determine ($L_{S,SS,A}$) expressed as a percent and defined as:

$$L_{S,SS,A}=C(R_{T,F}+D)(T_{F,SS}-T_{RA})$$

where:

C=as determined from Table 2 of this appendix
$R_{T,F}$=as defined in 4.1.7 of this appendix
D=as determined from Table 2 of this appendix
$T_{F,SS}$=as defined in 3.1 of this appendix
T_{RA}=as defined in 2.9 of this appendix

4.1.10 *Steady-state efficiency*. For vented heaters equipped with single stage thermostats, calculate the steady-state efficiency (excluding jacket loss, η_{SS}, expressed in percent and defined as:

$$\eta_{SS}=100-L_{L,A}-L_{S,SS,A}$$

where:

$L_{L,A}$=as defined in 4.1.6 of this appendix
$L_{S,SS,A}$=as defined in 4.1.9 of this appendix

For vented heaters equipped with either two stage thermostats or with step-modulating thermostats, calculate the steady-state efficiency at the reduced fuel input rate, η_{SS}, L, expressed in percent and defined as:

$$\eta_{SS-L}=100-L_{L,A}-L_{S,SS,A}$$

where:

$L_{L,A}$=as defined in 4.1.6 of this appendix
$L_{S,SS,A}$=as defined in 4.1.9 of this appendix in which $L_{S,SS,A}$ is determined at the reduced fuel input rate

For vented heaters equipped with two stage thermostats, calculate the steady-state efficiency at the maximum fuel input rate,
η_{SS-H}, expressed in percent and defined as:

$$\eta_{SS-H}=100-L_{L,A}-L_{S,SS,A}$$

where:

$L_{L,A}$=as defined in 4.1.6 of this appendix
$L_{S,SS,A}$=as defined in 4.1.9 of this appendix in which $L_{S,SS,A}$ is measured at the maximum fuel input rate

For vented heaters equipped with step-modulating thermostats, calculate the weighted-average steady-state efficiency in the modulating mode, η_{SS-MOD}, expressed in percent and defined as:

$$\eta_{SS-MOD}=\left[\eta_{SS-H}-\eta_{SS-L}\right]\left[\frac{T_C-T_{OA*}}{T_C-15}\right]+\eta_{SS-L}$$

where:

η_{SS-H}=as defined in 4.1.10 of this appendix
η_{SS-L}=as defined in 4.1.10 of this appendix
T_{OA*}=average outdoor temperature for vented heaters with step-modulating thermostats operating in the modulating mode and is obtained from Table 3 or Figure 1 of this appendix
T_C=balance point temperature which represents a temperature used to apportion the annual heating load between the reduced input cycling mode and either the modulating mode or maximum input cycling mode and is obtained either from Table 3 of this appendix or calculated by the following equation:

$$T_C=65-[(65-15)R]$$

where:

65=average outdoor temperature at which a vented heater starts operating
15=national average outdoor design temperature for vented heaters
R=ratio of reduced to maximum heat output rates, as defined in 4.1.13 of this appendix

4.1.11 *Reduced heat output rate*. For vented heaters equipped with either two stage thermostats or step-modulating thermostats, calculate the reduced heat output rate ($Q_{red-out}$) defined as:

$$Q_{red-out}=\eta_{SS-L}\ Q_{red-in}$$

where:

η_{SS-L}=as defined in 4.1.10 of this appendix
Q_{red-in}=the reduced fuel input rate

4.1.12 *Maximum heat output rate*. For vented heaters equipped with either two stage thermostats or step-modulating thermostas, calculate the maximum heat output rate ($Q_{max-out}$) defined as:

$$Q_{max,out}=h_{SS,H}\ Q_{max,in}$$

where:

η_{SS-H}=as defined in 4.1.10 of this appendix
Q_{max-in}=the maximum fuel input rate

4.1.13 *Ratio of reduced to maximum heat output rates*. For vented heaters equipped with

either two stage thermostats or step-modulating thermostats, calculate the ratio of reduced to maximum heat output rates (R) expressed as a decimal and defined as:

$R=Q_{red\text{-}out}/Q_{max\text{-}out}$

where:

$Q_{red\text{-}out}$=as defined in 4.1.11 of this appendix
$Q_{max\text{-}out}$=as defined in 4.1.12 of this appendix

4.1.14 *Fraction of heating load at reduced operating mode*. For vented heaters equipped with either two stage thermostats or step-modulating thermostats, determine the fraction of heating load at the reduced operating mode (X_1) expressed as a decimal and listed in Table 3 of this appendix or obtained from Figure 2 of this appendix.

4.1.15 *Fraction of heating load at maximum operating mode or noncycling mode*. For vented heaters equFipped with either two stage thermostats or step-modulating therostats, determine the fraction of heating load at the maximum operating mode or noncycling mode (X_2) expressed as a decimal and listed in Table 3 of this appendix or obtained from Figure 2 of this appendix.

4.1.16 *Weighted-average steady-state efficiency*. For vented heaters equipped with single stage thermostats, the weighted-average steady-state efficiency (η_{SS-WT}) is equal to η_{SS}, as defined in section 4.1.10 of this appendix. For vented heaters equipped with two stage thermostats, η_{SS-WT} is defined as:

$\eta_{SS-WT}=X_1\eta_{SS-L}+X_2\eta_{SS-H}$

where:

X_1=as defined in 4.1.14 of this appendix
η_{SS-L}=as defined in 4.1.10 of this appendix
X_2=as defined in 4.1.15 of this appendix
η_{SS-H}=as defined in 4.1.10 of this appendix

For vented heaters equipped with step-modulating thermostats, η_{SS-WT} is defined as:

$\eta_{SS-WT}=X_1\eta_{SS-L}+X_2\eta_{SS-MOD}$

where:

X_1=as defined in 4.1.14 of this appendix
η_{SS-L}=as defined in 4.1.10 of this appendix
X_2=as defined in 4.1.15 of this appendix
η_{SS-MOD}=as defined in 4.1.10 of this appendix

4.1.17 *Annual fuel utilization efficiency*. Calculate the annual fuel utilization efficiency (AFUE) expressed as percent and defined as:

$AFUE=[0.968\eta_{SS-WT}]-1.78D_F-1.89D_S-129P_F-2.8\ L_J+1.81$

where:

η_{SS-WT}=as defined in 4.1.16 of this appendix
D_F=as defined in 4.1.2 of this appendix
D_S=as defined in 4.1.3 of this appendix
P_F=as defined in 4.1.4 of this appendix
L_J=as defined in 4.1.5 of this appendix

4.2 *Annual fuel utilization efficiency for gas or oil fueled vented home heating equipment equipped with manual controls*. The following procedure determines the annual fuel utilization efficiency for gas or oil fueled vented home heating equipment equipped with manual controls.

4.2.1 *Average ratio of stack gas mass flow rate to flue gas mass flow rate at steady-state operation*. For vented heaters equipped with either direct vents or direct exhaust or are outdoor units, the average ratio of stack gas mass flow rate to flue gas mass flow rate at steady-state operation (S/F) shall be equal to unity. (S/F=1.) For all other types of vented heaters, calculate (S/F) defined as:

$S/F=1.3R_{T,S}/R_{T,F}$

where:

$R_{T,S}$=as defined in 4.1.8 of this appendix with X_{CO2s} measured at 50% fuel input rate
$R_{T,F}$=as defined in 4.1.7 of this appendix with X_{CO2F} measured at 50% fuel input rate

4.2.2 *Multiplication factor for infiltration loss during burner on-cycle*. Calculate the multiplication factor for infiltration loss during burner on-cycle ($K_{I,ON}$) defined as:

$K_{I,ON}=100(0.24)\ (S/F)\ (0.7)\ [1+R_{T,F}(A/F)]/HHV_A$

where:

100=converts a decimal fraction into a percent
0.24=specific heat of air
A/F=stoichiometric air/fuel ratio, determined in accordance with Table 2 of this appendix
S/F=as defined in 4.2.1 of this appendix at 50 percent of rated maximum fuel input
0.7=infiltration parameter
$R_{T,F}$=as defined in 4.1.7 of this appendix
HHV_A=average higher heating value of the test fuel, determined in accordance with Table 2 of this appendix

4.2.3 *On-cycle infiltration heat loss*. Calculate the on-cycle infiltration heat loss ($L_{I,ON}$) expressed as a percent and defined as:

$L_{I,ON}=K_{I,ON}\ (70–45)$

where:

$K_{I,ON}$=as defined in 4.2.2 of this appendix
70=average indoor temperature
45=average outdoor temperature

4.2.4 *Weighted-average steady-state efficiency*.

4.2.4.1 For manually controlled heaters with various input rates the weighted average steady-state efficiency (η_{SS-WT}), is determined as follows:

(1) at 50 percent of the maximum fuel input rate as measured in either section 3.1.1 of this appendix for manually controlled gas vented heaters or section 3.1.2 of this appendix for manually controlled oil vented heaters, or

(2) at the minimum fuel input rate as measured in either section 3.1.1 to this appendix for manually controlled gas vented heaters or section 3.1.2 to this appendix for

manually controlled oil vented heaters if the design of the heater is such that the ±5 percent of 50 percent of the maximum fuel input rate cannot be set, provided this minimum rate is no greater than ⅔ of maximum input rate of the heater.

4.2.4.2 For manually controlled heater with one single firing rate the weighted average steady-state efficiency is the steady-state efficiency measured at the single firing rate.

4.2.5 *Part-load fuel utilization efficiency*. Calculate the part-load fuel utilization efficiency (η_u) expressed as a percent and defined as:

$\eta_u = \eta_{SS\text{-}WT} - L_{I,ON}$

where:

$\eta_{SS\text{-}WT}$=as defined in 4.2.4 of this appendix

$L_{I,ON}$=as defined in 4.2.3 of this appendix

4.2.6 *Annual Fuel Utilization Efficiency*.

4.2.6.1 For manually controlled vented heaters, calculate the AFUE expressed as a percent and defined as:

$$\mathrm{AFUE} = \frac{2{,}950\ \eta_{SS}\ \eta_u\ Q_{in-max}}{2{,}950\ \eta_{SS}\ Q_{in-max} + 2.083(4{,}600)\eta_u\ Q_P}$$

where:

2,950=average number of heating degree days

η_{SS}=as defined as η_{SS-WT} in 4.2.4 of this appendix

η_u=as defined in 4.2.5 of this appendix

Q_{in-max}=as defined as Q_{in} at the maximum fuel input rate, as defined in 3.1 of this appendix

4,600=average number of non-heating season hours per year

Q_P=as defined in 3.5 of this appendix

2.083=(65–15)/24=50/24

65=degree day base temperature, °F

15=national average outdoor design temperature for vented heaters as defined in section 4.1.10 of this appendix

24=number of hours in a day

4.2.6.2 For manually controlled vented heaters where the pilot light can be turned off by the user when the heater is not in use as described in section 3.5.2, calculate the AFUE expressed as a percent and defined as:

$\mathrm{AFUE} = \eta_u$

where:

η_u=as defined in section 4.2.5 of this appendix

4.3 *Annual fuel utilization efficiency by the tracer gas method*. The annual fuel utilization efficiency shall be determined by the following tracer gas method for all vented heaters equipped with thermal stack dampers. All other types of vented heaters can elect to use the following tracer gas method, as an optional procedure.

4.3.1 *On-cycle sensible heat loss*. For vented heaters equipped with single stage thermostats, calculate the on-cycle sensible heat loss ($L_{S,ON}$) expressed as a percent and defined as:

$L_{S,ON} = L_{S,SS,A}$

where:

$L_{S,SS,A}$=as defined in 4.1.9 of this appendix

For vented heaters equipped with two stage thermostats, calculate $L_{S,ON}$ defined as:

$L_{S,ON} = X_1\ L_{S,SS,A\text{-}red} + X_2\ L_{S,SS,A\text{-}max}$

where:

X_1=as defined in 4.1.14 of this appendix

$L_{S,SS,A\text{-}red}$=as defined as $L_{S,SS,A}$ in 4.1.9 of this appendix at the reduced fuel input rate

X_2=as defined in 4.1.15 of this appendix

$L_{S,SS,A\text{-}max}$=as defined as $L_{S,SS,A}$ in 4.1.9 of this appendix at the maximum fuel input rate

For vented heaters with step-modulating thermostats, calculate $L_{S,ON}$ defined as:

$L_{S,ON} = X_1\ L_{S,SS,A\text{-}red} + X_2\ L_{S,SS,A\text{-}avg}$

where:

$X_{=1}$-as defined in 4.1.14 of this appendix

$L_{LS,SS,A\text{-}red}$=as defined in 4.3.1 of this appendix

X_2=as defined in 4.1.15 of this appendix

$L_{S,SS,A\text{-}avg}$=average sensible heat loss for step-modulating vented heaters operating in the modulating mode

$$L_{S,SS,A-avg} = \left[\left[L_{S,SS,A-max} - L_{S,SS,A-red}\right]\left[\frac{T_C - T_{OA*}}{TC - 15}\right]\right] + L_{S,SS,A-red}$$

where:

$L_{S,SS,A\text{-}avg}$=as defined in 4.3.1 of this appendix
T_C=as defined in 4.1.10 of this appendix
T_{OA*}=as defined in 4.1.10 of this appendix
15=as defined in 4.1.10 of this appendix

4.3.2 *On-cycle infiltration heat loss*. For vented heaters equipped with single stage thermostats, calculate the on-cycle infiltration heat loss ($L_{I,ON}$) expressed as a percent and defined as:

$L_{I,ON}=K_{I,ON}(70–45)$

where:

$K_{I,ON}$=as defined in 4.2.2 of this appendix
70=as defined in 4.2.3 of this appendix
45=as defined in 4.2.3 of this appendix

For vented heaters equipped with two stage thermostats, calculate $L_{I,ON}$ defined as:

$L_{I,ON}=X_1K_{I,ON\text{-}Max}(70–T_{OA*})+X_2K_{I,ON,red}(70–T_{OA})$

where:

X_1=as defined in 4.1.14 of this appendix
$K_{I,\,ON\text{-}max}$=as defined as $K_{I,ON}$ in 4.2.2 of this appendix at the maximum heat input rate
70=as defined in 4.2.3 of this appendix
T_{OA*}=as defined in 4.3.4 of this appendix
$K_{I,ON,red}$=as defined as $K_{I,ON}$ in 4.2.2 of this appendix at the minimum heat input rate
T_{OA}=as defined in 4.3.4 of this appendix
X_2=as defined in 4.1.15 of this appendix

For vented heaters equipped with step-modulating thermostats, calculate $L_{I,ON}$ defined as:

$L_{I,ON}=X_1\ K_{I,ON\text{-}avg}(70–T_{OA*})+X_2\ K_{I,ON\text{-}red}(70–T_{OA})$

where:

X_1=as defined in 4.1.14 of this appendix

$$K_{I,on,avg}=\frac{\left[K_{I,on,max}+K_{I,ON,red}\right]}{2}$$

70=as defined in 4.2.3 of this appendix
T_{OA*}=as defined in 4.3.4 of this appendix
X_2=as defined in 4.1.15 of this appendix
T_{OA}=as defined in 4.3.4 of this appendix

4.3.3 *Off-cycle sensible heat loss*. For vented heaters equipped with single stage thermostats, calculate the off-cycle sensible heat loss ($L_{S,OFF}$) at the maximum fuel input rate. For vented heaters equipped with step-modulating thermostats, calculate $L_{S,OFF}$ defined as:

$L_{S,OFF}=X_1\ L_{S,OFF,red}$

where:

X_1=as defined in 4.1.14 of this appendix
$L_{S,OFF,red}$=as defined as $L_{S,OFF}$ in 4.3.3 of this appendix at the reduced fuel input rate

For vented heaters equipped with two stage thermostats, calculate $L_{S,OFF}$ defined as:

$L_{S,OFF}=X_1\ L_{S,OFF,red}+X_2\ L_{S,OFF,Max}$

where:

X_1=as defined in 4.1.14 of this appendix
$L_{S,OFF,red}$=as defined as $L_{S,OFF}$ in 4.3.3 of this appendix at the reduced fuel input rate
X_2=as defined in 4.1.15 of this appendix
$L_{S,OFF,Max}$=as defined as $L_{S,OFF}$ in 4.3.3 of this appendix at the maximum fuel input rate

Calculate the off-cycle sensible heat loss ($L_{S,OFF}$) expressed as a percent and defined as:

$$L_{S,OFF}=\frac{100(0.24)}{.Q_{in}t_{on}}\sum m_{S,OFF}\left(T_{S,OFF}-T_{RA}\right)$$

where:

100=conversion factor for percent
0.24=specific heat of air in Btu per pound−°F
Q_{in}=fuel input rate, as defined in 3.1 of this appendix in Btu per minute (as appropriate for the firing rate)
t_{on}=average burner on-time per cycle and is 20 minutes
$\Sigma\ m_{S,OFF}(T_{S,OFF}-T_{RA})$=summation of the twenty values of the quantity, $m_{S,OFF}(T_{S,OFF}-T_{RA})$, measured in accordance with 3.3 of this appendix
$m_{S,OFF}$=stack gas mass flow rate pounds per minute

$$m_{S,OFF}=\frac{1.325P_BV_T\left(100-C_T\right)}{C_T\left(T_T+460\right)}$$

$T_{S,OFF}$=stack gas temperature measured in accordance with 3.3 of this appendix

T_{RA}=average room temperature measured in accordance with 3.3 of this appendix
P_B=barometric pressure in inches of mercury
V_T=flow rate of the tracer gas through the stack in cubic feet per minute
C_{T*}=concentration by volume of the active tracer gas in the mixture in percent and is 100 when the tracer gas is a single component gas
C_T=concentration by volume of the active tracer gas in the diluted stack gas in percent
T_T=temperature of the tracer gas entering the flow meter in degrees Fahrenheit
(T_T+460)=absolute temperature of the tracer gas entering the flow meter in degrees Rankine

4.3.4 *Average outdoor temperature.* For vented heaters equipped with single stage thermostats, the average outdoor temperature (T_{OA}) is 45 °F. For vented heaters equipped with either two stage thermostats or step-modulating thermostats, T_{OA} during the reduced operating mode is obtained from Table 3 or Figure 1 of this appendix. For vented heaters equipped with two stage thermostats, T_{OA}* during the maximum operating mode is obtained from Table 3 or Figure 1 of this appendix.

4.3.5 *Off-cycle infiltration heat loss.* For vented heaters equipped with single stage thermostats, calculate the off-cycle infiltration heat loss ($L_{I,OFF}$) at the maximum fuel input rate. For vented heaters equipped with step-modulating thermostats, calculate $L_{I,OFF}$ defined as:

$L_{I,OFF}=X_1\ L_{I,OFF,red}$

where:

X_1=as defined in 4.1.14 of this appendix
$L_{I,OFF,red}$=as defined in $L_{I,OFF}$ in 4.3.3 of this appendix at the reduced fuel input rate

For vented heaters equipped with two stage thermostats, calculate $L_{I,OFF}$ defined as:

$L_{I,OFF}=X_1\ L_{I,OFF,red}+X_2\ L_{I,OFF,max}$

where:

X_1=as defined in 4.1.14 of this appendix
$L_{I,OFF,red}$=as defined as $L_{I,OFF}$ in 4.3.3 of this appendix at the reduced fuel input rate
X_2=as defined in 4.1.15 of this appendix
$L_{I,OFF,Max}$=as defined as $L_{I,OFF}$ in 4.3.3 of this appendix at the maximum fuel input rate

Calculate the off-cycle infiltration heat loss ($L_{I,OFF}$) expressed as a percent and defined as:

$$L_{I,OFF}=\frac{100(0.24)(1.3)(0.7)\left(70-T_{OA}\right)}{Q_{in}t_{on}}\sum m_{S,OFF}$$

where:

100=conversion factor for percent
0.24=specific heat of air in Btu per pound−°F
1.3=dimensionless factor for converting laboratory measured stack flow to typical field conditions
0.7=infiltration parameter
70=assumed average indoor air temperature, °F
T_{OA}=average outdoor temperature as defined in 4.3.4 of this appendix
Q_{in}=fuel input rate, as defined in 3.1 of this appendix in Btu per minute (as appropriate for the firing rate)
t_{on}=average burner on-time per cycle and is 20 minutes
$\Sigma\ m_{S,OFF}$=summation of the twenty values of the quantity, $m_{S,OFF}$, measured in accordance with 3.3 of this appendix
$m_{S,OFF}$=as defined in 4.3.3 of this appendix

4.3.6 *Part-load fuel utilization efficiency.* Calculate the part-load fuel utilization efficiency (η_u) expressed as a percent and defined as:

$$\eta_u=100-L_{L,A}-C_jL_j\left[\frac{t_{on}}{t_{on}+P_Ft_{off}}\right]+\left[L_{s,on}+L_{s,OFF}+L_{I,on}+L_{s,OFF}\right]$$

where:
C_j=2.8, adjustment factor
L_j=jacket loss as defined in 4.1.5
$L_{L,A}$=as defined in 4.1.6 of this appendix
t_{on}=as defined in 4.3.3 of this appendix
$L_{S,ON}$=as defined in 4.3.1 of this appendix
$L_{S,OFF}$=as defined in 4.3.3 of this appendix
$L_{I,ON}$=as defined in 4.3.2 of this appendix
$L_{I,OFF}$=as defined in 4.1.4 of this appendix
P_F=as defined in 4.1.4 of this appendix

t_{OFF}=average burner off-time per cycle and is 20 minutes

4.3.7 Annual Fuel Utilization Efficiency.

Calculate the AFUE expressed as a percent and defined as:

$$AFUE = \frac{2{,}950\ \eta_{SS-WT}\ \eta_u\ Q_{in-max}}{2{,}950\ \eta_{SS-WT}\ Q_{in-max} + 2.083(4{,}600)\eta_u\ Q_P}$$

where:

2,950=average number of heating degree days
η_{SS-WT}=as defined in 4.1.16 of this appendix
η_u=as defined in 4.3.6 of this appendix
Q_{in-max}=as defined in 4.2.6 of this appendix
4,600=as specified in 4.2.6 of this appendix
Q_P=as defined in 3.5 of this appendix
2.083=as specified in 4.2.6 of this appendix

4.4 *Stack damper effectiveness for vented heaters equipped with electro-mechanical stack dampers.* Determine the stack damper effectiveness for vented heaters equipped with electro-mechanical stack dampers (D_o), defined as:

D_o=1.62 [1—A_D cos Ω/A_S]

where:

A_D=as defined in 3.4 of this appendix
Ω=as defined in 3.4 of this appendix
A_S=as defined in 3.4 of this appendix

4.5 *Addition requirements for vented home heating equipment using indoor air for combustion and draft control.* For vented home heating equipment using indoor air for combustion and draft control, D_F, as described in section 4.1.2 of this appendix, and D_S, as described in section 4.1.3 of this appendix, shall be determined from Table 1 of this appendix.

4.5.1 *Optional procedure for determining* D_P *for vented home heating equipment.* Calculate the ratio (D_P) of the rate of flue gas mass through the vented heater during the off-period, $M_{F,OFF}(T_{F,SS})$, to the rate of flue gas mass flow during the on-period, $M_{F,SS}(T_{F,SS})$, and defined as:

$D_P=M_{F,OFF}(T_{F,SS})/M_{F,SS}(T_{F,SS})$

For vented heaters in which no draft is maintained during the steady-state or cool down tests, $M_{F,OFF}(T_{F,SS})$ is defined as:

$$M_{F,OFF}\left(T_{F,SS}\right) = M_{F,OFF}\left(T^*_{F,OFF}\right)\left[\frac{T_{F,SS} - T_{RA}}{T^*_{F,OFF} - T_{RA}}\right]^{0.56}\left[\frac{T^*_{F,OFF} + 460}{T_{F,SS} + 460}\right]^{1.19}$$

For oil fueled vented heaters in which an imposed draft is maintained, as described in section 3.6 of this appendix, $M_{F,OFF}(T_{F,SS})$ is defined as:

$M_{F,OFF}(T_{F,SS})=M_{F,OFF}(T^*_{F,SS})$

where:

$T_{F,SS}$=as defined in 3.1.1 of this appendix
$T^*_{F,OFF}$=flue gas temperature during the off-period measured in accordance with 3.6 of this appendix in degrees Fahrenheit
T_{RA}=as defined in 2.9 of this appendix

$$M_{F,OFF}\left(T_{F,OFF}\right) = \frac{1.325 P_B V_T\left(100 - C_T\right)}{C_T\left(T_T + 460\right)}$$

p_B=barometric pressure measured in accordance with 3.6 of this appendix in inches of mercury
V_T=flow rate of tracer gas through the vented heater measured in accordance with 3.6 of this appendix in cubic feet per minute
C_T=concentration by volume of tracer gas present in the flue gas sample measured in accordance with 3.6 of this appendix in percent
C_T*=concentration by volume of the active tracer gas in the mixture in percent and is 100 when the tracer gas is a single component gas
T_T=the temperature of the tracer gas entering the flow meter measured in accordance with 3.6 of this appendix in degrees Fahrenheit
(T_T+460)=absolute temperature of the tracer gas entering the flow meter in degrees Rankine
$M_{F,SS}(T_{F,SS})=Q_{in}[R_{T,F}(A/F)+1]/[60HHV_A]$
Q_{in}=as defined in 3.1 of this appendix
$R_{T,F}$=as defined in 4.1.7 of this appendix
A/F=as defined in 4.2.2 of this appendix
HHV_A=as defined in 4.2.2 of this appendix

4.5.2 *Optional procedure for determining off-cycle draft factor for flue gas flow for vented*

heaters. For systems numbered 1 thru 10, calculate the off-cycle draft factor for flue gas flow (D_F) defined as:

$D_F=D_P$

For systems numbered 11 or 12: $D_F=D_P\ D_O$

where:

D_p=as defined in 4.5.1. of this appendix
D_O=as defined in 4.4 of this appendix

4.5.3 *Optional procedure for determining off-cycle draft factor for stack gas flow for vented heaters*. Calculate the off-cycle draft factor for stack gas flow (D_S) defined as:

For systems numbered 1 or 2: $D_S=1.0$
For systems numbered 3 or 4: $D_S=(D_P+0.79)/1.4$
For systems numbered 5 or 6: $D_S=D_O$
For systems numbered 7 or 8 and if $D_O(S/F)<1$:$D_S=D_O\ D_P$
For systems numbered 7 or 8 and if $D_O(S/F)>1$:

$D_S=D_O\ D_P+[0.85-D_O\ D_P]\ [D_O(S/F)-1]/[S/F-1]$

where:

D_P=as defined in 4.5.1 of this appendix
D_O=as defined in 4.4 of this appendix

4.6 *Annual energy consumption*.

4.6.1 *National average number of burner operating hours*. For vented heaters equipped with single stage controls or manual controls, the national average number of burner operating hours (BOH) is defined as:

$BOH_{SS}=1{,}416A_FA\ DHR-1{,}416\ B$

where:

1,416=national average heating load hours for vented heaters based on 2,950 degree days and 15 °F outdoor design temperature
A_F=0.7067, adjustment factor to adjust the calculated design heating requirement and heating load hours to the actual heating load experienced by the heating system
DHR=typical design heating requirements based on Q_{OUT}, from Table 4 of this appendix.
$Q_{OUT}=[(\eta_{SS}/100)-C_j\ (L_j/100)]\ Q_{in}$
L_j=jacket loss as defined in 4.1.5 of this appendix
C_j=2.8, adjustment factor as defined in 4.3.6 of this appendix
η_{SS}=steady-state efficiency as defined in 4.1.10 of this appendix, percent
Q_{in}=as defined in 3.1 of this appendix at the maximum fuel input rate
$A=100{,}000/[341{,}300P_E+(Q_{in}-Q_P)\eta_u]$
$B=2.938(Q_P)\ \eta_u\ A/100{,}000$
100,000=factor that accounts for percent and kBtu
P_E=as defined in 3.1.3 of this appendix
Q_P=as defined in 3.5 of this appendix
η_u=as defined in 4.3.6 of this appendix for vented heaters using the tracer gas method, percent
=as defined in 4.2.5 of this appendix for manually controlled vented heaters, percent
$=2{,}950\ AFUE\eta_{SS}\ Q_{in}/[2{,}950\ \eta_{SS}\ Q_{in}-AFUE(2.083)(4{,}600)Q_P]$, for vented heaters equipped without manual controls and without thermal stack dampers and not using the optional tracer gas method, where:
AFUE=as defined in 4.1.17 of this appendix, percent
2,950=average number of heating degree days as defined in 4.2.6 of this appendix
4,600=average number of non-heating season hours per year as defined in 4.2.6 of this appendix
2.938=(4,160/1,416)=ratio of the average length of the heating season in hours to the average heating load hours
2.083=as specified in 4.2.6 of this appendix

4.6.1.1 For vented heaters equipped with two stage or step modulating controls the national average number of burner operating hours at the reduced operating mode is defined as:

$BOH_R=X_1E_M/Q_{red\text{-}in}$

where:

X_1=as defined in 4.1.14 of this appendix
$Q_{red\text{-}in}$=as defined in 4.1.11 of this appendix
E_M=average annual energy used during the heating season
$=(Q_{in}-Q_P)BOH_{SS}+(8{,}760-4{,}600)Q_P$
Q_{in}=as defined in 3.1 of this appendix at the maximum fuel input rate
Q_P=as defined in 3.5 of this appendix
BOH_{SS}=as defined in 4.6.1 of this appendix, in which the term P_E in the factor A is increased by the factor R, which is defined in 3.1.3 of this appendix as:
R=1.3 for two stage controls
=1.4 for step modulating controls when the ratio of minimum-to-maximum fuel input is greater than or equal to 0.7
=1.7 for step modulating controls when the ratio of minimum-to-maximum fuel input is less than 0.7 and greater than or equal to 0.5
=2.2 for step modulating controls when the ratio of minimum-to-maximum fuel input is less than 0.5
$A=100{,}000/[341{,}300\ PE\ R+(Q_{in}-Q_P)\eta_u]$
8,760=total number of hours per year
4,600=as specified in 4.2.6 of this appendix

4.6.1.2 For vented heaters equipped with two stage or step modulating controls the national average number of burner operating hours at the maximum operating mode (BOH_H) is defined as:

$BOH_H=X_2E_M/Q_{in}$

where:

X_2=as defined in 4.1.15 of this appendix
E_M=average annual energy used during the heating season
$=(Q_{in}-Q_P)BOH_{SS}+(8{,}760-4{,}600)Q_P$
Q_{in}=as defined in 3.1 of this appendix at the maximum fuel input rate

4.6.2 *Average annual fuel energy for gas or oil fueled vented heaters.* For vented heaters equipped with single stage controls or manual controls, the average annual fuel energy consumption (E_F) is expressed in Btu per year and defined as:

$$E_F = BOH_{SS}\ (Q_{in} - Q_P) + 8{,}760\ Q_P$$

where:

BOH_{SS}=as defined in 4.6.1 of this appendix
Q_{in}=as defined in 3.1 of this appendix
Q_P=as defined in 3.5 of this appendix
8,760=as specified in 4.6.1 of this appendix

4.6.2.1 For vented heaters equipped with either two stage or step modulating controls E_F is defined as:

$$E_F = E_M + 4{,}600 Q_P$$

where:

E_M=as defined in 4.6.1.2 of this appendix
4,600=as specified 4.2.6 of this appendix
Q_P=as defined in 3.5 of this appendix

4.6.3 *Average annual auxiliary electrical energy consumption for vented heaters.* For vented heaters with single stage controls or manual controls the average annual auxiliary electrical consumption (E_{AE}) is expressed in kilowatt-hours and defined as:

$$E_{AE} = BOH_{SS} P_E$$

where:

BOH_{SS}=as defined in 4.6.1 of this appendix
P_E=as defined in 3.1.3 of this appendix

4.6.3.1 For vented heaters equipped with two stage or modulating controls E_{AE} is defined as:

$$E_{AE} = (BOH_R + BOH_H) P_E$$

where:

BOH_R=as defined in 4.6.1 of this appendix
BOH_H=as defined in 4.6.1 of this appendix
P_E=as defined in 3.1.3 of this appendix

4.6.4 *Average annual energy consumption for vented heaters located in a different geographic region of the United States and in buildings with different design heating requirements.*

4.6.4.1 *Average annual fuel energy consumption for gas or oil fueled vented home heaters located in a different geographic region of the United States and in buildings with different design heating requirements.* For gas or oil fueled vented heaters the average annual fuel energy consumption for a specific geographic region and a specific typical design heating requirement (E_{FR}) is expressed in Btu per year and defined as:

$$E_{FR} = (E_F - 8{,}760\ Q_P)(HLH/1{,}416) + 8{,}760 Q_P$$

where:

E_F=as defined in 4.6.2 of this appendix
8,760=as specified in 4.6.1 of this appendix
Q_P=as defined in 3.5 of this appendix
HLH=heating load hours for a specific geographic region determined from the heating load hour map in Figure 3 of this appendix
1,416=as specified in 4.6.1 of this appendix

4.6.4.2 *Average annual auxiliary electrical energy consumption for gas or oil fueled vented home heaters located in a different geographic region of the United States and in buildings with different design heating requirements.* For gas or oil fueled vented home heaters the average annual auxiliary electrical energy consumption for a specific geographic region and a specific typical design heating requirement (E_{AER}) is expressed in kilowatt-hours and defined as:

$$E_{AER} = E_{AE}\ HLH/1{,}416$$

where:

E_{AE}=as defined in 4.6.3 of this appendix
HLH=as defined in 4.6.4.1 of this appendix
1,416=as specified in 4.6.1 of this appendix

TABLE 1—OFF-CYCLE DRAFT FACTORS FOR FLUE GAS FLOW (D_F) AND FOR STACK GAS FLOW (D_S) FOR VENTED HOME HEATING EQUIPMENT EQUIPPED WITHOUT THERMAL STACK DAMPERS

System number	(D_F)	(D_S)	Burner type	Venting system type [1]
1	1.0	1.0	Atmospheric	Draft hood or diverter.
2	0.4	1.0	Power	Draft hood or diverter.
3	1.0	1.0	Atmospheric	Barometric draft regulator.
4	0.4	0.85	Power	Barometric draft regulator.
5	1.0	D_o	Atmospheric	Draft hood or diverter with damper.
6	0.4	D_o	Power	Draft hood or diverter with damper.
7	1.0	D_o	Atmospheric	Barometric draft regulator with damper.
8	0.4	D_o D_p	Power	Barometric draft regulator with damper.
9	1.0	.....	Atmospheric	Direct vent.
10	0.4	.....	Power	Direct vent.
11	D_o	.....	Atmospheric	Direct vent with damper.
12	0.4 D_o	.....	Power	Direct vent with damper.

[1] Venting systems listed with dampers means electro-mechanical dampers only.

TABLE 2—VALUES OF HIGHER HEATING VALUE ($HHV_{(A)}$), STOICHIOMETRIC AIR/FUEL (A/F), LATENT HEAT LOSS ($L_{L,A}$) AND FUEL-SPECIFIED PARAMETERS (A, B, C, AND D) FOR TYPICAL FUELS

Fuels	HHV_A (Btu/lb)	A/F	$L_{L,A}$	A	B	C	D
No. 1 oil	19,800	14.56	6.55	0.0679	14.22	0.0179	0.167
No. 2 oil	19,500	14.49	6.50	0.0667	14.34	0.0181	0.167
Natural gas	20,120	14.45	9.55	0.0919	10.96	0.0175	0.171
Manufactured gas	18,500	11.81	10.14	0.0965	10.10	0.0155	0.235
Propane	21,500	15.58	7.99	0.0841	12.60	0.0177	0.151
Butane	20,000	15.36	7.79	0.0808	12.93	0.0180	0.143

TABLE 3—FRACTION OF HEATING LOAD AT REDUCED OPERATING MODE (X1) AND AT MAXIMUM OPERATING MODE (X2), AVERAGE OUTDOOR TEMPERATURES (TOA AND TOA*), AND BALANCE POINT TEMPERATURE (TC) FOR VENTED HEATERS EQUIPPED WITH EITHER TWO-STAGE THERMOSTATS OR STEP-MODULATING THERMOSTATS

Heat output ratio [a]	X1	X2	TOA	TOA*	TC
0.20 to 0.24	.12	.88	57	40	53
0.25 to 0.29	.16	.84	56	39	51
0.30 to 0.34	.20	.80	54	38	49
0.35 to 0.39	.30	.70	53	36	46
0.40 to 0.44	.36	.64	52	35	44
0.45 to 0.49	.43	.57	51	34	42
0.50 to 0.54	.52	.48	50	32	39
0.55 to 0.59	.60	.40	49	30	37
0.60 to 0.64	.70	.30	48	29	34
0.65 to 0.69	.76	.24	47	27	32
0.70 to 0.74	.84	.16	46	25	29
0.75 to 0.79	.88	.12	46	22	27
0.80 to 0.84	.94	.06	45	20	23
0.85 to 0.89	.96	.04	45	18	21
0.90 to 0.94	.98	.02	44	16	19
0.95 to 0.99	.99	.01	44	13	17

[a] The heat output ratio means the ratio of minimum to maximum heat output rates as defined in 4.1.13.

TABLE 4—AVERAGE DESIGN HEATING REQUIREMENTS FOR VENTED HEATERS WITH DIFFERENT OUTPUT CAPACITIES

Vented heaters output capacity Q_{out}—(Btu/hr)	Average design heating requirements (kBtu/hr)
5,000–7,499	5.0
7,500–10,499	7.5
10,500–13,499	10.0
13,500–16,499	12.5
16,500–19,499	15.0
19,500–22,499	17.5
22,500–26,499	20.5
26,500–30,499	23.5
30,500–34,499	26.5
34,500–38,499	30.0
38,500–42,499	33.5
42,500–46,499	36.5
46,500–51,499	40.0
51,500–56,499	44.0
56,500–61,499	48.0
61,500–66,499	52.0
66,500–71,499	56.0
71,500–76,500	60.0

FIGURE 1

Average Outdoor Air Temperature vs. Balance Point Temperature for Modulating Vented Heaters

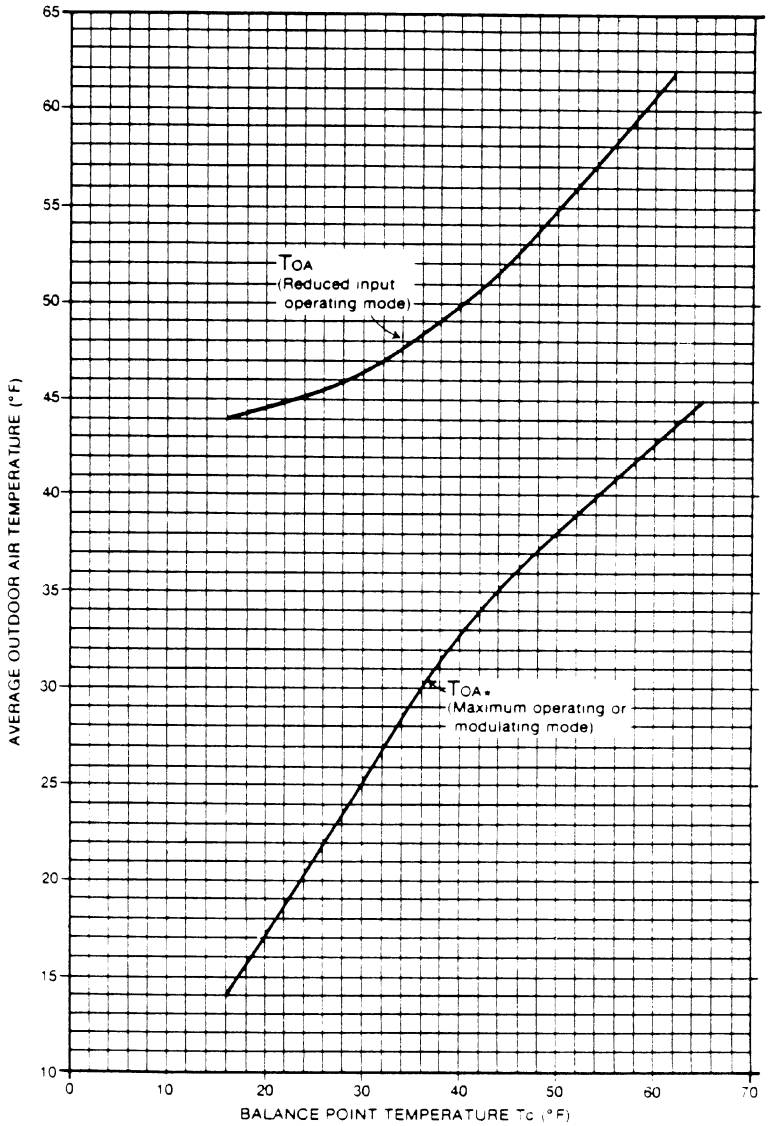

This figure is based on 4500 degree-days and 15°F outdoor design temperature.

FIGURE 2

Fraction of Total Annual Heating Load Applicable to Reduced Operating Mode (X_1) and to Maximum Operating Mode or Modulating Mode (X_2) vs. Balance Point Temperature for Modulating Vented Heaters

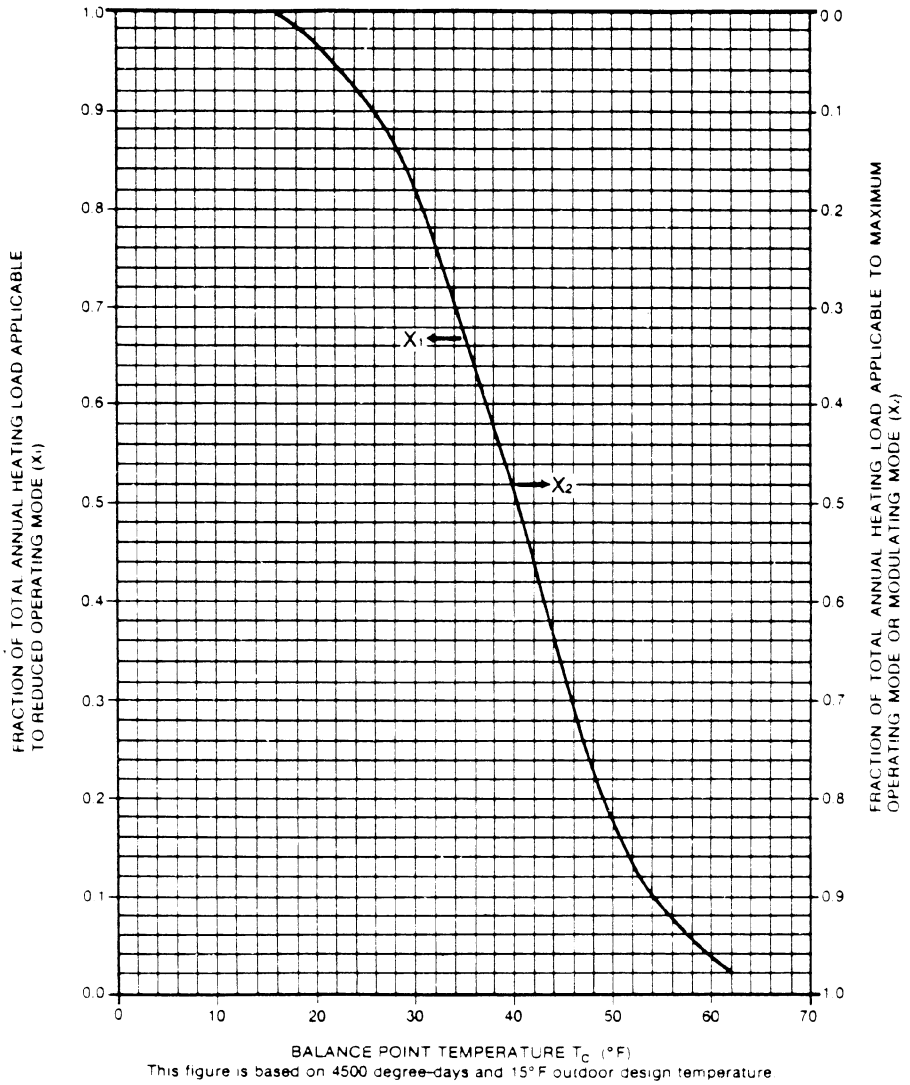

This figure is based on 4500 degree-days and 15°F outdoor design temperature.

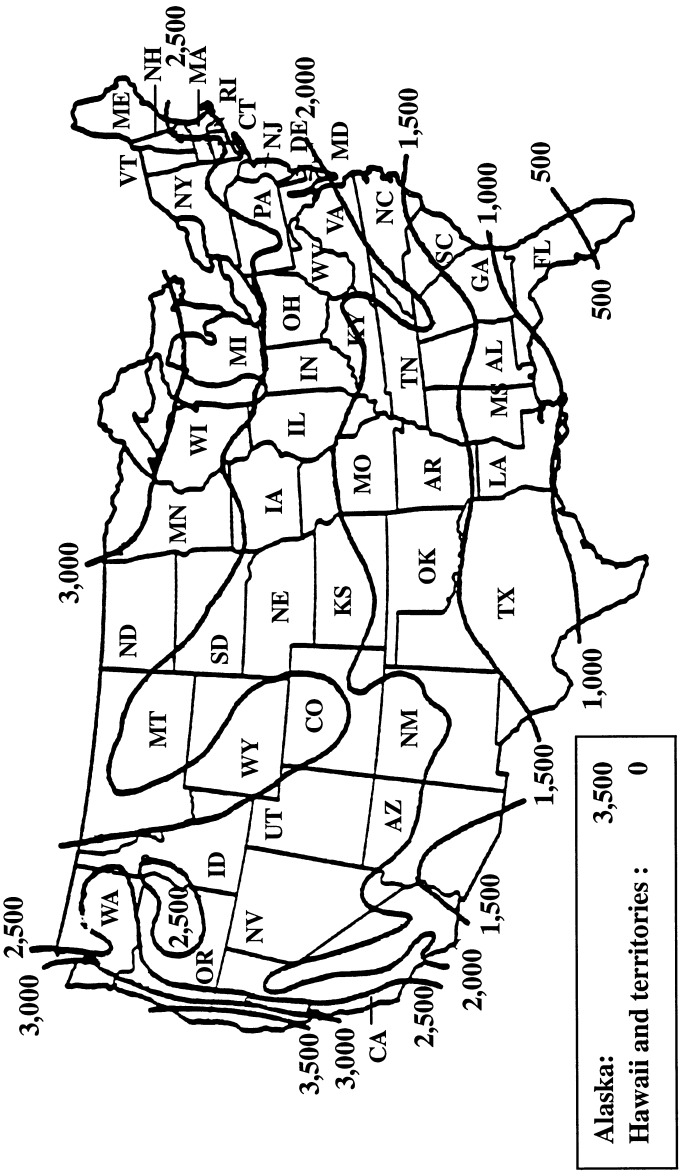

This map is reasonably accurate for most parts of the United States but is necessarily generalized, and consequently not too accurate in mountainous regions, particularly in the rockies.

FIGURE 3- HEATING LOAD HOURS (HLH) FOR THE UNITED STATES

[49 FR 12169, Mar. 28, 1984, as amended at 62 FR 26162, May 12, 1997]

APPENDIX P TO SUBPART B OF PART 430—UNIFORM TEST METHOD FOR MEASURING THE ENERGY CONSUMPTION OF POOL HEATERS

1. Test method. The test method for testing pool heaters is as specified in American National Standards Institute Standard for Gas-Fired Pool Heaters, Z21.56–1994.

2. Test conditions. Establish the test conditions specified in section 2.9 of ANSI Z21.56–1994.

3. Measurements. Measure the quantities delineated in section 2.9 of ANSI Z21.56–1994. The measurement of energy consumption for oil-fired pool heaters in Btu is to be carried out in appropriate units, e.g., gallons.

4. Calculations

4.1 *Thermal efficiency.* Calculate the thermal efficiency, E_t (expressed as a percent), as specified in section 2.9 of ANSI Z21.56–1994. The expression of fuel consumption for oil-fired pool heaters shall be in Btu.

4.2 *Average annual fossil fuel energy for pool heaters.* The average annual fuel energy for pool heater, E_F, is defined as:

$$E_F = BOH\ Q_{IN} + (POH - BOH) Q_P$$

where:

BOH=average number of burner operating hours=104 h

POH=average number of pool operating hours=4464 h

Q_{IN}=rated fuel energy input as defined according to 2.9.1 or 2.9.2 of ANSI Z21.56–1994, as appropriate

Q_P=energy consumption of continuously operating pilot light if employed, in Btu/h.

4.3 *Average annual auxiliary electrical energy consumption for pool heaters.* The average annual auxiliary electrical energy consumption for pool heaters, E_{AE}, is expressed in Btu and defined as:

$$E_{AE} = BOH\ PE$$

where:

PE=$2E_c$ if heater tested according to 2.9.1 of ANSI Z21.56–1994

=3.412 PE_{rated} if heater tested according to 2.9.2 of ANSI Z21.56–1994, in Btu/h

E_c=Electrical consumption of the heater (converted to equivalent unit of Btu), including the electrical energy to the recirculating pump if used, during the 30-minute thermal efficiency test, as defined in 2.9.1 of ANSI Z21.56–1994, in Btu per 30 min.

2=Conversion factor to convert unit from per 30 min. to per h.

PE_{rated}=nameplate rating of auxiliary electrical equipment of heater, in Watts

BOH=as defined in 4.2 of this appendix

4.4 *Heating seasonal efficiency.*

4.4.1 Calculate the seasonal useful output of the pool heater as:

$$E_{OUT} = BOH\ [(E_t/100)(Q_{IN} + PE)]$$

where:

BOH=as defined in 4.2 of this appendix

E_t=thermal efficiency as defined in 4.1 of this appendix

Q_{IN}=as defined in 4.2 of this appendix

PE=as defined in 4.3 of this appendix

100=conversion factor, from percent to fraction

4.4.2 Calculate the seasonal input to the pool heater as:

$$E_{IN} = BOH\ (Q_{IN} + PE) + (POH - BOH)\ Q_P$$

where:

BOH=as defined in 4.2 of this appendix

Q_{IN}=as defined in 4.2 of this appendix

PE=as defined in 4.3 of this appendix

POH=as defined in 4.2 of this appendix

Q_P=as defined in 4.2 of this appendix

4.4.3 *Calculate the pool heater heating seasonal efficiency (in percent).*

4.4.3.1 For pool heaters employing a continuous pilot light:

$$EFFY_{HS} = 100(E_{OUT}/E_{IN})$$

where:

E_{OUT}=as defined in 4.4.1 of this appendix

E_{IN}=as defined in 4.4.2 of this appendix

100=to convert a fraction to percent

4.4.3.2 For pool heaters without a continuous pilot light:

$$EFFY_{HS} = E_t$$

where:

E_t=as defined in 4.1 of this appendix.

[62 FR 26165, May 12, 1997]

APPENDIX Q TO SUBPART B OF PART 430—UNIFORM TEST METHOD FOR MEASURING THE ENERGY CONSUMPTION OF FLUORESCENT LAMP BALLASTS

1. Definitions

1.1 *ANSI Standard* means a standard developed by a committee accredited by the American National Standards Institute.

1.2 *Ballast input voltage* means the rated input voltage of a fluorescent lamp ballast.

1.3 *F4OT12 lamp* means a nominal 40 watt tubular fluorescent lamp which is 48 inches in length and one and a half inches in diameter, and conforms to ANSI standard C78.81–2003 (Data Sheet 7881–ANSI–1010–1).

1.4 *F96T12 lamp* means a nominal 75 watt tubular fluorescent lamp which is 96 inches in length and one and one-half inches in diameter, and conforms to ANSI Standard C78.81–2003 (Data Sheet 7881–ANSI–3007–1).

1.5 *F96T12HO lamp* means a nominal 110 watt tubular fluorescent lamp that is 96 inches in length and 1½ inches in diameter,

and conforms to ANSI standard C78.81–2003 (Data Sheet 7881–ANSI–1019–1).

1.6 *F34T12 lamp* (also known as a ''F40T12/ES lamp'') means a nominal 34 watt tubular fluorescent lamp that is 48 inches in length and 1½ inches in diameter, and conforms to ANSI standard C78.81–2003 (Data Sheet 7881–ANSI–1006–1).

1.7 *F96T12/ES lamp* means a nominal 60 watt tubular fluorescent lamp that is 96 inches in length and 1½ inches in diameter, and conforms to ANSI standard C78.81–2003 (Data Sheet 7881–ANSI–3006–1).

1.8 *F96T12HO/ES lamp* means a nominal 95 watt tubular fluorescent lamp that is 96 inches in length and 1½ inches in diameter, and conforms to ANSI standard C78.81–2003 (Data Sheet 7881–ANSI–1017–1).

1.9 *Input current* means the root-mean-square (RMS) current in amperes delivered to a fluorescent lamp ballast.

1.10 *Luminaire* means a complete lighting unit consisting of a fluorescent lamp or lamps, together with parts designed to distribute the light, to position and protect such lamps, and to connect such lamps to the power supply through the ballast.

1.11 *Nominal lamp watts* means the wattage at which a fluorescent lamp is designed to operate.

1.12 *Power factor* means the power input divided by the product of ballast input voltage and input current of a fluorescent lamp ballast, as measured under test conditions specified in ANSI Standard C–82.2–1984.

1.13 *Power input* means the power consumption in watts of a ballast and fluorescent lamp or lamps, as determined in accordance with the test procedures specified in ANSI Standard C82.2–1984.

1.14 *Relative light output* means the light output delivered through the use of a ballast divided by the light output delivered through the use of a reference ballast, expressed as a percent, as determined in accordance with the test procedures specified in ANSI Standard C82.2–1984.

1.15 *Residential building* means a structure or portion of a structure which provides facilities or shelter for human residency, except that such term does not include any multifamily residential structure of more than three stores above grade.

1.16 *ANSI Standard C82.2–1984* means the test standard published by the American National Standard Institute (ANSI), titled ''American National Standard for Fluorescent Lamp Ballasts—Method of Measurement, 1984'', and designated as ANSI C82.2–1984.

2. Test conditions. The test conditions for testing fluorescent lamp ballasts shall be done in accordance with the American National Standard Institute (ANIS) Standard C82.2–1984, ''American National Standard for Fluorescent Lamp Ballasts—Methods of Measurement,'' approved October 21, 1983. This incorporation by reference was approved by the Director of the Federal Register in accordance with 5 U.S.C. 552(a) and 1 CFR part 51. Copies may be obtained from ANSI Publication Sales, 1430 Broadway, New York, NY 10068. Copies may be inspected at the Department of Energy, Freedom of Information Reading Room, Room 1E–190, Fluorescent Lamp Ballasts, Docket No. CE–RM–89–102, 1000 Independence Avenue, SW, Washington DC 20585, or at the National Archives and Records Administration (NARA). For information on the availability of this material at NARA, call 202–741–6030, or go to: *http://www.archives.gov/federal_register/code_of_federal_regulations/ibr_locations.html.* Any subsequent amendment to this standard by the standard-setting organization will not affect the DOE test procedures unless and until amended by DOE. The test conditions are described in sections 4, 5, 6, 7, and 21 of ANSI Standard C82.2–1984.

3. Test Method and Measurements.

3.1. The test method for testing fluorescent lamp ballasts shall be done in accordance with ANSI Standard C82.2–1984.

3.2 *Instrumentation.* The instrumentation shall be as specified by sections 8, 9, 10, 11, 12, 19.1, and 23.2 of ANSI Standard C82.2–1984.

3.3 *Electric Supply.*

3.3.1. *Input Power.* Measure the input power (watts) to the ballast in accordance with ANSI Standard C82.2–1984, section 3.2.1(3) and section 4.

3.3.2 *Input Voltage.* Measure the input voltage (volts) (RMS) to the ballast in accordance with ANSI Standard C82.2–1984, section 3.2.1(1) and section 4.

3.3.3 *Input Current.* Measure the input current (amps) (RMS) to the ballast in accordance with ANSI Standard C82.2–1984, section 3.2.1(2) and section 4.

3.4 *Light Output.*

3.4.1 Measure the light output of the reference lamp with the reference ballast in accordance with ANSI Standard C82.2–1984, section 16.

3.4.2 Measure the light output of the reference lamp with the test ballast in accordance with ANSI Standard C82.2–1984, section 16.

4. Calculations.

4.1 Calculate relative light output:

$$\frac{\text{Photocell output of lamp on test ballast}}{\text{Photocell output of lamp on ref. ballast}} \times 100 = \text{relative light output}$$

Where:

photocell output of lamp on test ballast is determined in accordance with section 3.4.2, expressed in watts, and photocell output of lamp on ref. ballast is determined in

accordance with section 3.4.1, expressed in watts.

4.2. Determine the Ballast Efficacy Factor (BEF) using the following equations:

(a) Single lamp ballast

$$\text{BEF} = \frac{\text{relative light output}}{\text{input power}}$$

(b) Multiple lamp ballast

$$\text{BEF} = \frac{\text{average relative light output}}{\text{input power}}$$

Where:

input power is determined in accordance with section 3.3.1,

relative light output as defined in section 4.1, and

average relative light output is the relative light output, as defined in section 4.1, for all lamps, divided by the total number of lamps.

4.3 Determine Ballast Power Factor (PF):

$$\text{PF} = \frac{\text{Input power}}{\text{Input voltage} \times \text{input current}}$$

Where:

Input power is as defined in section 3.3.1,

Input voltage is determined in accordance with section 3.3.2, expressed in volts, and

Input current is determined in accordance with section 3.3.3, expressed in amps.

[54 FR 6076, Feb. 7, 1989, as amended at 56 FR 18682, April 24, 1991; 69 FR 18803, Apr. 9, 2004; 70 FR 60412, Oct. 18, 2005]

APPENDIX R TO SUBPART B OF PART 430—UNIFORM TEST METHOD FOR MEASURING AVERAGE LAMP EFFICACY (LE) AND COLOR RENDERING INDEX (CRI) OF ELECTRIC LAMPS

1. Scope: This appendix applies to the measurement of lamp lumens, electrical characteristics and CRI for general service fluorescent lamps, and to the measurement of lamp lumens and electrical characteristics for general service incandescent lamps, incandescent reflector lamps and medium base compact fluorescent lamps.

2. Definitions

2.1 To the extent that definitions in the IESNA and CIE standards do not conflict with the DOE definitions, the definitions specified in §1.2 of IESNA LM–9, §3.0 of IESNA LM–20, §2 of IESNA LM–45, §2 of IESNA LM–58, §1.2 of IESNA LM–66 and §IV of CIE Publication No. 13.2 shall be included.

2.2 *ANSI Standard* means a standard developed by a committee accredited by the American National Standards Institute (ANSI).

2.3 *CIE* means the International Commission on Illumination.

2.4 *CRI* means Color Rendering Index as defined in §430.2.

2.5 *IESNA* means the Illuminating Engineering Society of North America.

2.6 *Lamp efficacy* means the ratio of measured lamp lumen output in lumens to the measured lamp electrical power input in watts, rounded to the nearest whole number, in units of lumens per watt.

2.7 *Lamp lumen output* means the total luminous flux produced by the lamp, at the reference condition, in units of lumens.

2.8 *Lamp electrical power input* means the total electrical power input to the lamp, including both arc and cathode power where appropriate, at the reference condition, in units of watts.

2.9 *Reference condition* means the test condition specified in IESNA LM–9 for general service fluorescent lamps, in IESNA LM–20 for incandescent reflector lamps, in IESNA LM–45 for general service incandescent lamps and in IESNA LM–66 for medium base compact fluorescent lamps (see 10 CFR 430.22).

3. Test Conditions

3.1 *General Service Fluorescent Lamps:* For general service fluorescent lamps, the ambient conditions of the test and the electrical circuits, reference ballasts, stabilization requirements, instruments, detectors, and photometric test procedure and test report shall be as described in the relevant sections of IESNA LM–9 (see 10 CFR 430.22).

3.2 *General Service Incandescent Lamps:* For general service incandescent lamps, the selection and seasoning (initial burn-in) of the test lamps, the equipment and instrumentation, and the test conditions shall be as described in IESNA LM–45 (see 10 CFR 430.22).

3.3 *Incandescent Reflector Lamps:* For incandescent reflector lamps, the selection and seasoning (initial burn-in) of the test lamps, the equipment and instrumentation, and the test conditions shall conform to sections 4.2 and 5.0 of IESNA LM–20 (see 10 CFR 430.22).

3.4 *Medium Base Compact Fluorescent Lamps:* For medium base compact fluorescent lamps, the selection, seasoning and stabilization of the test lamps, and the test conditions, shall be as described in Sections 1, 2, 3, and 7 of IESNA LM–66 (see 10 CFR 430.22).

4. Test Methods and Measurements

All lumen measurements made with instruments calibrated to the devalued NIST lumen after January 1, 1996, shall be multiplied by 1.011.

4.1 *General Service Fluorescent Lamps*

4.1.1 The measurement procedure shall be as described in IESNA LM–9, except that

lamps shall be operated at the appropriate voltage and current conditions as described in ANSI C78.375 and in ANSI C78.1, C78.2 or C78.3, and lamps shall be operated using the appropriate reference ballast as described in ANSI C82.3 (see 10 CFR 430.22).

4.1.2 Lamp lumen output (lumens) and lamp electrical power input (watts), at the reference condition, shall be measured and recorded. Lamp efficacy shall be determined by computing the ratio of the measured lamp lumen output and lamp electrical power input at equilibrium for the reference condition.

4.2 *General Service Incandescent Lamps*

4.2.1 The measurement procedure shall be as described in IESNA LM–45 (see 10 CFR 430.22). Lamps shall be operated at the rated voltage as defined in § 430.2.

4.2.2 The test procedure shall conform with section 7 of IESNA LM–45 and the lumen output of the lamp shall be determined in accordance with Sections 4.2a or 4.2b of IESNA LM–45 at the reference condition. Lamp electrical power input in watts shall be measured and recorded. Lamp efficacy shall be determined by computing the ratio of the measured lamp lumen output and lamp electrical power input at equilibrium for the reference condition. The test report shall conform to § 8 of IESNA LM–45 (see 10 CFR § 430.22).

4.3 *Incandescent Reflector Lamps*

4.3.1 The measurement procedure shall be as described in IESNA LM–20 (see 10 CFR 430.22). Lamps shall be operated at the rated voltage as defined in § 430.2.

4.3.2. Lamp lumen output shall be determined as total forward lumens, and may be measured in an integrating sphere at the reference condition in accordance with § 7.2 of IESNA LM–20 (see 10 CFR 430.22) or from an average intensity distribution curve measured at the reference condition specified in § 6.0 of IESNA LM–20. Lamp electrical power input in watts shall be measured and recorded.

4.3.3 Lamp efficacy shall be determined by computing the ratio of the measured lamp lumen output and lamp electrical power input at equilibrium for the reference condition. The test report shall conform to section 10.0 of IES LM–20 (see § 430.22).

4.4 *Medium Base Compact Fluorescent Lamps*

4.4.1 The measurement procedure shall be as described in IESNA LM–66 (see 10 CFR 430.22) except that the provisions of IESNA LM–66 which refer to operation of the lamp using a reference ballast do not apply to the testing of integrally ballasted compact fluorescent lamps. Lamps shall be operated at 120 V and 60 Hertz. Lamp lumen output shall be measured with the integral ballast according to section 11.3 of IESNA LM–66. Lamp electrical power input in watts shall be measured and recorded.

4.4.2 Lamp efficacy shall be determined by computing the ratio of the measured lamp lumen output and lamp electrical power input at equilibrium for the reference condition. The test report shall conform to section 13 of IESNA LM–66 (see 10 CFR 430.22).

4.5 *Determination of Color Rendering Index*

4.5.1 The CRI shall be determined in accordance with the method specified in CIE Publication 13.2 for general service fluorescent lamps. The required spectroradiometric measurement and characterization shall be conducted in accordance with the methods given in IESNA LM–58 and IESNA LM–16 (see 10 CFR 430.22).

4.5.2 The test report shall include a description of the test conditions, equipment, measured lamps, spectroradiometric measurement results and CRI determination.

[62 FR 29240, May 29, 1997]

APPENDIX S TO SUBPART B OF PART 430—UNIFORM TEST METHOD FOR MEASURING THE WATER CONSUMPTION OF FAUCETS AND SHOWERHEADS

1. *Scope:* This Appendix covers the test requirements used to measure the hydraulic performance of faucets and showerheads.

2. Flow Capacity Requirements:

a. Faucets—The test procedures to measure the water flow rate for faucets, expressed in gallons per minute (gpm) and liters per minute (L/min), or gallons per cycle (gal/cycle) and liters per cycle (L/cycle), shall be conducted in accordance with the test requirements specified in section 6.5, Flow Capacity Test, of the ASME/ANSI Standard A112.18.1M–1996 (see § 430.22). Measurements shall be recorded at the resolution of the test instrumentation. Calculations shall be rounded off to the same number of significant digits as the previous step. The final water consumption value shall be rounded to one decimal place for non-metered faucets, or two decimal places for metered faucets.

b. Showerheads—The test conditions to measure the water flow rate for showerheads, expressed in gallons per minute (gpm) and liters per minute (L/min), shall be conducted in accordance with the test requirements specified in section 6.5, Flow Capacity Test, of the ASME/ANSI Standard A112.18.1M–1996 (see § 430.22). Measurements shall be recorded at the resolution of the test instrumentation. Calculations shall be rounded off to the same number of significant digits as the previous step. The final water consumption value shall be rounded to one decimal place.

[63 FR 13316, Mar. 18, 1998]

APPENDIX T TO SUBPART B OF PART 430—UNIFORM TEST METHOD FOR MEASURING THE WATER CONSUMPTION OF WATER CLOSETS AND URINALS

1. *Scope:* This Appendix covers the test requirements used to measure the hydraulic performances of water closets and urinals.

2. Test Apparatus and General Instructions:

a. The test apparatus and instructions for testing water closets shall conform to the requirements specified in section 7.1.2, Test Apparatus and General Requirements, subsections 7.1.2.1, 7.1.2.2, and 7.1.2.3 of the ASME/ANSI Standard A112.19.6–1995 (see § 430.22). Measurements shall be recorded at the resolution of the test instrumentation. Calculations shall be rounded off to the same number of significant digits as the previous step. The final water consumption value shall be rounded to one decimal place.

b. The test apparatus and instructions for testing urinals shall conform to the requirements specified in section 8.2, Test Apparatus and General Requirements, subsections 8.2.1, 8.2.2, and 8.2.3 of the ASME/ANSI Standard A112.19.6–1995 (see § 430.22). Measurements shall be recorded at the resolution of the test instrumentation. Calculations shall be rounded off to the same number of significant digits as the previous step. The final water consumption value shall be rounded to one decimal place.

3. Test Measurement:

a. Water closets—The measurement of the water flush volume for water closets, expressed in gallons per flush (gpf) and liters per flush (Lpf), shall be conducted in accordance with the test requirements specified in section 7.1.6, Water Consumption and Hydraulic Characteristics, of the ASME/ANSI Standard A112.19.6–1995 (see § 430.22).

b. Urinals—The measurement of water flush volume for urinals, expressed in gallons per flush (gpf) and liters per flush (Lpf), shall be conducted in accordance with the test requirements specified in section 8.5, Water Consumption, of the ASME/ANSI Standard A112.19.6–1995 (see § 430.22).

[63 FR 13317, Mar. 18, 1998]

Subpart C—Energy and Water Conservation Standards

§ 430.31 Purpose and scope.

This subpart contains energy conservation standards and water conservation standards (in the case of faucets, showerheads, water closets, and urinals) for classes of covered products that are required to be administered by the Department of Energy pursuant to the Energy Conservation Program for Consumer Products Other Than Automobiles under the Energy Policy and Conservation Act, as amended (42 U.S.C. 6291 *et seq.*). Basic models of covered products manufactured before the date on which an amended energy conservation standard or water conservation standard (in the case of faucets, showerheads, water closets, and urinals) becomes effective (or revisions of such models that are manufactured after such date and have the same energy efficiency, energy use characteristics, or water use characteristics (in the case of faucets, showerheads, water closets, and urinals), that comply with the energy conservation standard or water conservation standard (in the case of faucets, showerheads, water closets, and urinals) applicable to such covered products on the day before such date shall be deemed to comply with the amended energy conservation standard or water conservation standard (in the case of faucets, showerheads, water closets, and urinals).

[63 FR 13317, Mar. 18, 1998]

§ 430.32 Energy and water conservation standards and effective dates.

The energy and water (in the case of faucets, showerheads, water closets, and urinals) conservation standards for the covered product classes are:

(a) *Refrigerators/refrigerator-freezers/freezers.* These standards do not apply to refrigerators and refrigerator-freezers with total refrigerated volume exceeding 39 cubic feet (1104 liters) or freezers with total refrigerated volume exceeding 30 cubic feet (850 liters).

Product class	Energy standards equations for maximum energy use (kWh/yr)	
	Effective January 1, 1993	Effective July 1, 2001
1. Refrigerators and Refrigerator-freezers with manual defrost	13.5AV+299 0.48av+299	8.82AV+248.4 0.31av+248.4
2. Refrigerator-Freezer—partial automatic defrost	10.4AV+398 0.37av+398	8.82AV+248.4 0.31av+248.4
3. Refrigerator-Freezers—automatic defrost with top-mounted freezer without through-the-door ice service and all-refrigerators—automatic defrost	16.0AV+355 0.57av+355	9.80AV+276.0 0.35av+276.0
4. Refrigerator-Freezers—automatic defrost with side-mounted freezer without through-the-door ice service	11.8AV+501 0.42AV+501	4.91AV+507.5 0.17av+507.5
5. Refrigerator-Freezers—automatic defrost with bottom-mounted freezer without through-the-door ice service	16.5AV+367 0.58av+367	4.60AV+459.0 0.16av+459.0
6. Refrigerator-Freezers—automatic defrost with top-mounted freezer with through-the-door ice service	17.6AV+391 0.62av+391	10.20AV+356.0 0.36av+356.0
7. Refrigerator-Freezers—automatic defrost with side-mounted freezer with through-the-door ice service	16.3AV+527 0.58av+527	10.10AV+406.0 0.36av+406.0
8. Upright Freezers with Manual Defrost	10.3AV+264 0.36av+264	7.55AV+258.3 0.27av+258.3
9. Upright Freezers with Automatic Defrost	14.9AV+391 0.53av+391	12.43AV+326.1 0.44av+326.1
10. Chest Freezers and all other Freezers except Compact Freezers	11.0AV+160 0.39av+160	9.88AV+143.7 0.35av+143.7
11. Compact Refrigerators and Refrigerator-Freezers with Manual Defrost	13.5AV+299[a] 0.48av+299[a]	10.70AV+299.0 0.38av+299.0
12. Compact Refrigerator-Freezer—partial automatic defrost	10.4AV+398[a] 0.37av+398[a]	7.00AV+398.0 0.25av+398.0
13. Compact Refrigerator-Freezers—automatic defrost with top-mounted freezer and compact all-refrigerators—automatic defrost	16.0AV+355[a] 0.57av+355[a]	12.70AV+355.0 0.45av+355.0
14. Compact Refrigerator-Freezers—automatic defrost with side-mounted freezer	11.8AV+501[a] 0.42[av]+501[a]	7.60AV+501.0 0.27av+501.0
15. Compact Refrigerator-Freezers—automatic defrost with bottom-mounted freezer	16.5AV+367[a] 0.58av+367[a]	13.10AV+367.0 0.46av+367.0
16. Compact Upright Freezers with Manual Defrost	10.3AV+264[a] 0.36av+264[a]	9.78AV+250.8 0.35av+250.8
17. Compact Upright Freezers with Automatic Defrost	14.9AV+391[a] 0.53av+391[a]	11.40AV+391.0 0.40av+391.0
18. Compact Chest Freezers	11.0AV+160[a] 0.39av+160[a]	10.45AV+152.0 0.37av+152.0

AV=Total adjusted volume, expressed in ft.^{3}, as determined in Appendices A1 and B1 of subpart B of this part.
av=Total adjusted volume, expressed in Liters.
[a] Applicable standards for compact refrigerator products manufactured before July 1, 2001. Compact refrigerator products are not separate product categories under the standards effective January 1, 1993.

(b) *Room air conditioners.*

Product class	Energy efficiency ratio, effective as of	
	Jan. 1, 1990	Oct. 1, 2000
1. Without reverse cycle, with louvered sides, and less than 6,000 Btu/h	8.0	9.7
2. Without reverse cycle, with louvered sides, and 6,000 to 7,999 Btu/h	8.5	9.7
3. Without reverse cycle, with louvered sides, and 8,000 to 13,999 Btu/h	9.0	9.8
4. Without reverse cycle, with louvered sides, and 14,000 to 19,999 Btu/h	8.8	9.7
5. Without reverse cycle, with louvered sides, and 20,000 Btu/h or more	8.2	8.5
6. Without reverse cycle, without louvered sides, and less than 6,000 Btu/h	8.0	9.0
7. Without reverse cycle, without louvered sides, and 6,000 to 7,999 Btu/h	8.5	9.0
8. Without reverse cycle, without louvered sides, and 8,000 to 13,999 Btu/h	8.5	8.5
9. Without reverse cycle, without louvered sides, and 14,000 to 19,999 Btu/h	8.5	8.5
10. Without reverse cycle, without louvered sides, and 20,000 Btu/h or more	8.2	8.5
11. With reverse cycle, with louvered sides, and less than 20,000 Btu/h	8.5	9.0
12. With reverse cycle, without louvered sides, and less than 14,000 Btu/h	8.0	8.5
13. With reverse cycle, with louvered sides, and 20,000 Btu/h or more	8.5	8.5
14. With reverse cycle, without louvered sides, and 14,000 Btu/h or more	8.0	8.0

Product class	Energy efficiency ratio, effective as of	
	Jan. 1, 1990	Oct. 1, 2000
15. Casement-Only	*	8.7
16. Casement-Slider	*	9.5

*Casement-only and casement-slider room air conditioners are not separate product classes under standards effective January 1, 1990. These units are subject to the applicable standards in classes 1 through 14 based on unit capacity and the presence or absence of louvered sides and a reverse cycle.

(c) *Central air conditioners and central air conditioning heat pumps.* (1) Split system central air conditioners and central air conditioning heat pumps manufactured after January 1, 1992, and before January 23, 2006, and single package central air conditioners and central air conditioning heat pumps manufactured after January 1, 1993, and before January 23, 2006, shall have Seasonal Energy Efficiency Ratio and Heating Seasonal Performance Factor no less than:

Product class	Seasonal energy efficiency ratio	Heating seasonal performance factor
(i) Split systems	10.0	6.8
(ii) Single package systems	9.7	6.6

(2) Central air conditioners and central air conditioning heat pumps manufactured on or after January 23, 2006, shall have Seasonal Energy Efficiency Ratio and Heating Seasonal Performance Factor no less than:

Product class	Seasonal energy efficiency ratio (SEER)	Heating seasonal performance factor (HSPF)
(i) Split system air conditioners	13	
(ii) Split system heat pumps	13	7.7
(iii) Single package air conditioners	13	
(iv) Single package heat pumps	13	7.7
(v)(A) Through-the-wall air conditioners and heat pumps-split system [1]	10.9	7.1
(v)(B) Through-the-wall air conditioners and heat pumps-single package [1]	10.6	7.0
(vi) Small duct, high velocity systems	13	7.7
(vii)(A) Space constrained products-air conditioners	12	
(vii)(B) Space constrained products-heat pumps	12	7.4

[1] As defined in § 430.2, this product class applies to products manufactured prior to January 23, 2010.

(d) *Water heaters.*

The energy factor of water heaters shall not be less than the following for products manufactured on or after the indicated dates.

Product class	Energy factor as of January 1, 1990	Energy factor as of of April 15, 1991	Energy factor as of January 20, 2004
1. Gas-fired Water Heater	0.62 − (.0019 × Rated Storage Volume in gallons).	0.62 − (.0019 × Rated Storage Volume in gallons).	0.67 − (0.0019 × Rated Storage Volume in gallons).
2. Oil-fired Water Heater	0.59 − (.0019 × Rated Storage Volume in gallons).	0.59 − (.0019 × rated Storage Volume in gallons).	0.59 − (0.0019 × Rated Storage Volume in gallons).
3. Electric Water Heater	0.95 − (0.00132 × Rated Storage Volume in gallons).	0.93 − (0.00132 × Rated Storage Volume in gallons.	0.97 − (0.00132 × Rated Storage Volume in gallons).
4. Tabletop Water Heater	0.95 − (0.00132 × Rated Storage Volume in gallons).	0.93 − (0.00132 × Rated Storage Volume in gallons).	0.93 − (0.00132 × Rated Storage Volume in gallons).
5. Instantaneous Gas-fire Water Heater.	0.62 − (0.0019 × Rated Storage Volume in gallons).	0.62 − (0.0019 × Rated Storage Volume in gallons).	0.62 − (0.0019 × Rated Storage Volume in gallons).
6. Instantaneous Electric Water Heater.	0.95 − (0.00132 × Rated Storage Volume in gallons).	0.93 − (0.00132 × Rated Storage Volume in gallons).	0.93 − (0.00132 × Rated Storage Volume in gallons).

NOTE: The Rated Storage Volume equals the water storage capacity of a water heater, in gallons, as specified by the manufacturer.

(e) *Furnaces*

Product class	AFUE [1] (percent)	Effective date
1. Furnaces (excluding classes noted below) (percent)	78	01/01/92
2. Mobile Home Furnaces (percent)	75	09/01/90
3. Small furnaces (other than furnaces designed solely for installation in mobile homes) having an input rate of less than 45,000 Btu/hr		
(A) Weatherized (outdoor)	78	01/01/92
(B) Non-weatherized (indoor)	78	01/01/92

Product class	AFUE [1] (percent)	Effective date
4. Boilers (excluding gas steam) (percent)	80	01/01/92
5. Gas steam boilers (percent)	75	01/01/92

[1] Annual Fuel Utilization Efficiency, as determined in § 430.22(n)(2) of this part.

(f) *Dishwashers*. The energy factor of dishwashers manufactured on or after May 14, 1994, must not be less than:

Product class	Energy factor (cycles/kWh)
(1) Compact Dishwasher (capacity less than eight place settings plus six serving pieces as specified in ANSI/AHAM DW–1 [Incorporated by reference, see § 430.22] using the test load specified in section 2.7 of Appendix C in subpart B)	0.62
(2) Standard Dishwasher (capacity equal to or greater than eight place settings plus six serving pieces as specified in ANSI/AHAM DW–1 [Incorporated by Reference, see § 430.22] using the test load specified in section 2.7 of Appendix C in subpart B)	0.46

(g) *Clothes washers*. (1) Clothes washers manufactured before January 1, 2004, shall have an energy factor no less than:

Product Class	Energy factor (cu.ft./kWh/cycle)
i. Top-Loading, Compact (less than 1.6 ft.^{3} capacity).	0.9.
ii. Top-Loading, Standard (1.6 ft.^{3} or greater capacity).	1.18.
iii. Top-Loading, Semi-Automatic.	[1] Not Applicable.
iv. Front-Loading	[1] Not Applicable.
v. Suds-saving	[1] Not Applicable.

[1] Must have an unheated rinse water option.

(2) Clothes washers manufactured on or after January 1, 2004, and before January 1, 2007, shall have a modified energy factor no less than:

Product Class	Modified energy factor (cu.ft./kWh/cycle)
i. Top-Loading, Compact (less than 1.6 ft.^{3} capacity).	0.65.
ii. Top-Loading, Standard (1.6 ft.^{3} or greater capacity).	1.04.
iii. Top-Loading, Semi-Automatic.	[1] Not Applicable.
iv. Front-Loading	1.04.
v. Suds-saving	[1] Not Applicable.

[1] Must have an unheated rinse water option.

(3) Clothes washers manufactured on or after January 1, 2007, shall have a modified energy factor no less than:

Product Class	Modified energy factor (cu.ft./kWh/cycle)
i. Top-Loading, Compact (less than 1.6 ft.^{3} capacity).	0.65.
ii. Top-Loading, Standard (1.6 ft.^{3} or greater capacity).	1.26.
iii. Top-Loading, Semi-Automatic.	[1] Not Applicable.
iv. Front-Loading	1.26.
v. Suds-saving	[1] Not Applicable.

[1] Must have an unheated rinse water option.

(h) *Clothes dryers*. (1) Gas clothes dryers manufactured between January 1, 1988, and May 14, 1994, shall not be equipped with a constant burning pilot.

(2) Clothes dryers manufactured on or after May 14, 1994, shall have an energy factor no less than;

Product class	Energy factor (lbs/KWh)
i. Electric, Standard (4.4 ft^3 or greater capacity)	3.01
ii. Electric, Compact (120v) (less than 4.4 ft^3 capacity)	3.13
iii. Electric, Compact (240v) (less than 4.4 ft^3 capacity)	2.90
iv. Gas	2.67

(i) *Direct heating equipment*.

Product class	Annual fuel utilization efficiency, Jan. 1, 1990 (percent)
1. Gas wall fan type up to 42,000 Btu/hour	73
2. Gas wall fan type over 42,000 Btu/hour	74
3. Gas wall gravity type up to 10,000 Btu/hour	59
4. Gas wall gravity type over 10,000 Btu/hour up to 12,000 Btu/hour	60
5. Gas wall gravity type over 12,000 Btu/hour up to 15,000 Btu/hour	61
6. Gas wall gravity type over 15,000 Btu/hour up to 19,000 Btu/hour	62
7. Gas wall gravity type over 19,000 Btu/hour up to 27,000 Btu/hour	63
8. Gas wall gravity type over 27,000 Btu/hour up to 46,000 Btu/hour	64
9. Gas wall gravity type over 46,000 Btu/hour	65
10. Gas floor up to 37,000 Btu/hour	56
11. Gas floor over 37,000 Btu/hour	57
12. Gas room up to 18,000 Btu/hour	57
13. Gas room over 18,000 Btu/hour up to 20,000 Btu/hour	58
14. Gas room over 20,000 Btu/hour up to 27,000 Btu/hour	63
15. Gas room over 27,000 Btu/hour up to 46,000 Btu/hour	64
16. Gas room over 46,000 Btu/hour	65

(j) *Cooking Products*. Gas cooking products with an electrical supply cord shall not be equipped with a constant burning pilot light. This standard is effective on January 1, 1990.

(k) *Pool heaters*. The thermal efficiency of pool heaters must be no less

than 78%. The standard is effective on January 1, 1990.

(l) *Television sets.* [Reserved]

(m)(1) *Fluorescent lamp ballasts.* Except as provided in paragraphs (m)(2), (m)(3), (m)(4), (m)(5), (m)(6) and (m)(7) of this section, each fluorescent lamp ballast—

(i) (A) Manufactured on or after January 1, 1990;

(B) Sold by the manufacturer on or after April 1, 1990; or

(C) Incorporated into a luminaire by a luminaire manufacturer on or after April 1, 1991; and

(ii) Designed—

(A) To operate at nominal input voltages of 120 or 277 volts;

(B) To operate with an input current frequency of 60 Hertz; and

(C) For use in connection with an F40T12, F96T12, or F96T12HO lamps shall have a power factor of 0.90 or greater and shall have a ballast efficacy factor not less than the following:

Application for operation of	Ballast input voltage	Total nominal lamp watts	Ballast efficacy factor
One F40 T12 lamp	120	40	1.805
	277	40	1.805
Two F40 T12 lamps	120	80	1.060
	277	80	1.050
Two F96T12 lamps	120	150	0.570
	277	150	0.570
Two F96T12HO lamps ..	120	220	0.390
	277	220	0.390

(2) The standards described in paragraph (m)(1) of this section do not apply to—

(i) A ballast that is designed for dimming or for use in ambient temperatures of 0 °F or less, or

(ii) A ballast that has a power factor of less than 0.90 and is designed for use only in residential building applications.

(3) Except as provided in paragraph (m)(4) of this section, each fluorescent lamp ballast—

(i) (A) Manufactured on or after April 1, 2005;

(B) Sold by the manufacturer on or after July 1, 2005; or

(C) Incorporated into a luminaire by a luminaire manufacturer on or after April 1, 2006; and

(ii) Designed—

(A) To operate at nominal input voltages of 120 or 277 volts;

(B) To operate with an input current frequency of 60 Hertz; and

(C) For use in connection with an F40T12, F96T12, or F96T12HO lamps; shall have a power factor of 0.90 or greater and shall have a ballast efficacy factor not less than the following:

Application of operation of	Ballast input voltage	Total nominal lamp watts	Ballast efficacy factor
One F40 T12 lamp	120	40	2.29
	277	40	2.29
Two F40 T12 lamps	120	80	1.17
	277	80	1.17
Two F96T12 lamps	120	150	0.63
	277	150	0.63
Two F96T12HO lamps ..	120	220	0.39
	277	220	0.39

(4) (i) The standards described in paragraph (m)(3) do not apply to:

(A) A ballast that is designed for dimming to 50 percent or less of its maximum output;

(B) A ballast that is designed for use with two F96T12HO lamps at ambient temperatures of −20 °F or less and for use in an outdoor sign;

(C) A ballast that has a power factor of less than 0.90 and is designed and labeled for use only in residential building applications; or

(D) A replacement ballast as defined in paragraph (m)(4)(ii) of this section.

(ii) For purposes of this paragraph (m), a replacement ballast is defined as a ballast that:

(A) Is manufactured on or before June 30, 2010;

(B) Is designed for use to replace an existing ballast in a previously installed luminaire;

(C) Is marked ''FOR REPLACEMENT USE ONLY'';

(D) Is shipped by the manufacturer in packages containing not more than 10 ballasts;

(E) Has output leads that when fully extended are a total length that is less than the length of the lamp with which it is intended to be operated; and

(F) Meets or exceeds the ballast efficacy factor in the following table:

Application for operation of	Ballast input voltage	Total nominal lamp watts	Ballast efficacy factor
One F40 T12 lamp	120	40	1.805
	277	40	1.805

Application for operation of	Ballast input voltage	Total nominal lamp watts	Ballast efficacy factor
Two F40 T12 lamps	120	80	1.060
	277	80	1.050
Two F96T12 lamps	120	150	0.570
	277	150	0.570
Two F96T12HO lamps ..	120	220	0.390
	277	220	0.390

(5) Except as provided in paragraph (m)(7) of this section, each fluorescent lamp ballast (other than replacement ballasts defined in § 430.2)—

(i)(A) Manufactured on or after July 1, 2009;

(B) Sold by the manufacturer on or after October 1, 2009; or

(C) Incorporated into a luminaire by a luminaire manufacturer on or after July 1, 2010; and

(ii) Designed—

(A) To operate at nominal input voltages of 120 or 277 volts;

(B) To operate with an input current frequency of 60 Hertz; and

(C) For use in connection with F34T12 lamps, F96T12/ES lamps, or F96T12HO/ES lamps; shall have a power factor of 0.90 or greater and shall have a ballast efficacy factor of not less than the following:

Application for operation of	Ballast input voltage	Total nominal lamp watts	Ballast efficacy factor
One F34T12 lamp	120/277	34	2.61
Two F34T12 lamps	120/277	68	1.35
Two F96T12/ES lamps	120/277	120	0.77
Two F96T12HO/ES lamps	120/277	190	0.42

(6) The standards in paragraph (m)(5) shall apply to all ballasts covered by paragraph (m)(5)(ii), including replacement ballasts and ballasts described in paragraph (m)(7) of this section, that are manufactured on or after July 1, 2010, or sold by the manufacturer on or after October 1, 2010.

(7) The standards in paragraph (m)(5) do not apply to—

(i) A ballast that is designed for dimming to 50 percent or less of the maximum output of the ballast;

(ii) A ballast that is designed for use with 2 F96T12HO lamps at ambient temperatures of 20 degrees F or less and for use in an outdoor sign; or

(iii) A ballast that has a power factor of less than 0.90 and is designed and labeled for use only in residential applications.

(n) *General service fluorescent lamps and incandescent reflector lamps.* (1) Each of the following general service fluorescent lamps manufactured after the effective dates specified in the table shall meet or exceed the lamp efficacy and CRI standards shown in the table below:

FLUORESCENT LAMPS

Lamp type	Nominal lamp wattage	Minimum CRI	Minimum average lamp efficacy (LPW)	Effective date
4-foot medium bi-pin	gt;35W	69	75.0	Nov. 1, 1995.
	≤35W	45	75.0	Nov. 1, 1995.
2-foot U-shaped	gt;35W	69	68.0	Nov. 1, 1995.
	≤35W	45	64.0	Nov. 1, 1995.
8-foot slimline	gt;65W	69	80.0	May 1, 1994.
	≤65W	45	80.0	May 1, 1994.
8-foot high output	gt;100W	69	80.0	May 1, 1994.
	≤100W	45	80.0	May 1, 1994.

(2) Each of the following incandescent reflector lamps manufactured after November 1, 1995, shall meet or exceed the lamp efficacy standards shown in the table in this paragraph:

INCANDESCENT REFLECTOR LAMPS

Nominal lamp wattage	Minimum average lamp efficacy (LPW)
40–50	10.5
51–66	11.0
67–85	12.5
86–115	14.0
116–155	14.5
156–205	15.0

(o) *Faucets*. The maximum water use allowed for any of the following faucets manufactured after January 1, 1994, when measured at a flowing water pressure of 60 pounds per square inch (414 kilopascals), shall be as follows:

Faucet type	Maximum flow rate (gpm (L/min)) or (gal/cycle (L/cycle))
Lavatory faucets	2.2 gpm (8.3 L/min)[1,2]
Lavatory replacement aerators.	2.2 gpm (8.3 L/min)
Kitchen faucets	2.2 gpm (8.3 L/min)
Kitchen replacement aerators.	2.2 gpm (8.3 L/min)
Metering faucets	0.25 gal/cycle (0.95 L/cycle)[3,4]

NOTE:

[1] Sprayheads with independently-controlled orifices and manual controls.

The maximum flow rate of each orifice that manually turns on or off shall not exceed the maximum flow rate for a lavatory faucet.

[2] Sprayheads with collectively controlled orifices and manual controls.

The maximum flow rate of a sprayhead that manually turns on or off shall be the product of (a) the maximum flow rate for a lavatory faucet and (b) the number of component lavatories (rim space of the lavatory in inches (millimeters) divided by 20 inches (508 millimeters)).

[3] Sprayheads with independently controlled orifices and metered controls.

The maximum flow rate of each orifice that delivers a preset volume of water before gradually shutting itself off shall not exceed the maximum flow rate for a metering faucet.

[4] Sprayheads with collectively-controlled orifices and metered controls.

The maximum flow rate of a sprayhead that delivers a preset volume of water before gradually shutting itself off shall be the product of (a) the maximum flow rate for a metering faucet and (b) the number of component lavatories (rim space of the lavatory in inches (millimeters) divided by 20 inches (508 millimeters)).

(p) *Showerheads*. The maximum water use allowed for any showerheads manufactured after January 1, 1994, shall be 2.5 gallons per minute (9.5 liters per minute) when measured at a flowing pressure of 80 pounds per square inch gage (552 kilopascals). Any such showerhead shall also meet the requirements of ASME/ANSI Standard A112.18.1M–1996, 7.4.4(a).

(q) *Water closets*. (1) The maximum water use allowed in gallons per flush for any of the following water closets manufactured after January 1, 1994, shall be as follows:

Water closet type	Maximum flush rate (gpf (Lpf))
Gravity tank-type toilets	1.6 (6.0)
Flushometer tank toilets	1.6 (6.0)
Electromechanical hydraulic toilets	1.6 (6.0)
Blowout toilets	3.5 (13.2)

(2) The maximum water use allowed for flushometer valve toilets, other than blowout toilets, manufactured after January 1, 1997, shall be 1.6 gallons per flush (6.0 liters per flush).

(r) *Urinals*. The maximum water use allowed for any urinals manufactured after January 1, 1994, shall be 1.0 gallons per flush (3.8 liters per flush). The maximum water use allowed for a trough-type urinal shall be the product of:

(1) The maximum flow rate for a urinal and

(2) The length of the trough-type urinal in inches (millimeter) divided by 16 inches (406 millimeters).

(s) *Ceiling fans and ceiling fan light kits*.

(1) All ceiling fans manufactured on or after January 1, 2007, shall have the following features:

(i) Fan speed controls separate from any lighting controls;

(ii) Adjustable speed controls (either more than 1 speed or variable speed);

(iii) The capability of reversible fan action, except for—

(A) Fans sold for industrial applications;

(B) Outdoor applications; and

(C) Cases in which safety standards would be violated by the use of the reversible mode.

(2)(i) Ceiling fan light kits with medium screw base sockets manufactured on or after January 1, 2007, shall be packaged with screw-based lamps to fill all screw base sockets.

(ii) The screw-based lamps required under paragraph (2)(i) of this section shall—

(A) Meet the ENERGY STAR Program requirements for Compact Fluorescent Lamps, version 3; or

(B) Use light sources other than compact fluorescent lamps that have lumens per watt performance at least equivalent to comparable configured compact fluorescent lamps meeting the

energy conservation standards described in paragraph (2)(ii)(A) of this section.

(3) Ceiling fan light kits with pin-based sockets for fluorescent lamps manufactured on or after January 1, 2007 shall—

(i) Meet the ENERGY STAR Program Requirements for Residential Light Fixtures version 4.0 issued by the Environmental Protection Agency; and

(ii) Be packaged with lamps to fill all sockets.

(t) *Torchieres*. A torchiere manufactured on or after January 1, 2006 shall:

(1) Consume not more than 190 watts of power; and

(2) Not be capable of operating with lamps that total more than 190 watts.

(u) *Medium Base Compact Fluorescent Lamps*. A bare lamp and covered lamp (no reflector) medium base compact fluorescent lamp manufactured on or after January 1, 2006, shall meet the following requirements:

Factor	Requirements
Lamp Power (Watts) & Configuration[1]	Minimum Efficiency: lumen/watt (Based upon initial lumen data).[2]
Base Lamp:	
Lamp Power <15	45.0.
Lamp Power ≥15	60.0.
Covered Lamp (no reflector):	
Lamp Power <15	40.0.
15≤ Lamp Power <19	48.0.
19≤ Lamp Power <25	50.0.
Lamp Power ≥25	55.0.
Covered Lamp (with reflector):	
Lamp Power <20	33.0.
Lamp Power ≥20	40.0.
1,000-hour Lumen Maintenance	The average of at least 5 lamps must be a minimum 90.0% of initial (100-hour) lumen output @ 1,000 hours of rated life.
Lumen Maintenance	80.0% of initial (100-hour) rating at 40 percent of rated life (per ANSI C78.5 Clause 4.10).
Rapid Cycle Stress Test	Per ANSI C78.5 and IESNA LM–65 (clauses 2,3,5, and 6). *Exception:* Cycle times must be 5 minutes on, 5 minutes off. Lamp will be cycled once for every two hours of rated life. At least 5 lamps *must meet or exceed* the minimum number of cycles.
Average Rated Lamp Life	≥6,000 hours as declared by the manufacturer on packaging and qualification form. At 80% of rated life, statistical methods may be used to confirm lifetime claims based on sampling performance.

[1] Take performance and electrical requirements at the end of the 100-hour aging period according to ANSI Standard C78.5. The lamp efficacy shall be the average of the lesser of the lumens per watt measured in the base up an/or other specified positions. Use wattages place on packaging to select proper specification efficacy in this table, not measured wattage. Labeled wattages are for reference only.

[2] Efficacies are based on measured values for lumens and wattages from pertinent test data. Wattages and lumens placed on packages may not be used in calculation and are not governed by this specification. For multi-level or dimmable systems, measurements shall be at the highest setting. Acceptable measurement error is ±3%.

(v) *Dehumidifiers*. Dehumidifiers manufactured on or after October 1, 2007, shall have an energy factor that meets or exceeds the following values:

Product capacity (pints/day)	Minimum energy factor (liters/kWh)
25.00 or less	1.00
25.01–35.00	1.20
35.01–54.00	1.30
54.01–74.99	1.50
75.00 or more	2.25

[54 FR 6077, Feb. 7, 1989, as amended at 54 FR 47943, Nov. 17, 1989; 55 FR 42177, Oct. 17, 1990; 56 FR 22279, May 14, 1991; 56 FR 24333, May 30, 1991; 59 FR 49475, Sept. 28, 1994; 62 FR 23116, Apr. 28, 1997; 63 FR 13317, Mar. 18, 1998; 63 FR 48057, Sept. 8, 1998; 65 FR 56747, Sept. 19, 2000; 66 FR 3332, Jan. 12, 2001; 66 FR 65097, Dec. 18, 2001; 67 FR 36406, May 23, 2002; 67 FR 38324, June 3, 2002; 68 FR 51903, Aug. 29, 2003; 69 FR 51000, Aug. 17, 2004; 70 FR 60412, Oct. 18, 2005; 70 FR 61698, Oct. 25, 2005]

EFFECTIVE DATE NOTE: At 70 FR 59180, Oct. 11, 2005, § 430.32 was amended by revising the section heading and adding introductory text to paragraph (c), effective Apr. 10, 2006. For the convenience of the user the revised text follows:

§ 430.32 Energy conservation standards and effective dates.

* * * * *

(c) *Central air conditioners and heat pumps.* The energy conservation standards defined in terms of the heating seasonal performance factor are based on Region IV, the minimum standardized design heating requirement, and the sampling plan stated in § 430.24(m).

* * * * *

§ 430.33 Preemption of State regulations.

Any State regulation providing for any energy conservation standard, or water conservation standard (in the case of faucets, showerheads, water closets, and urinals), or other requirement with respect to the energy efficiency, energy use, or water use (in the case of faucets, showerheads, water closets, or urinals) of a covered product that is not identical to a Federal standard in effect under this subpart is preempted by that standard, except as provided for in sections 327 (b) and (c) of the Act.

[63 FR 13318, Mar. 18, 1998]

§ 430.34 Energy and water conservation standards amendments

The Department of Energy may not prescribe any amended standard which increases the maximum allowable energy use or, in the case of showerheads, faucets, water closets or urinals, the maximum allowable water use, or which decreases the minimum required energy efficiency of a covered product.

[67 FR 36406, May 23, 2002]

APPENDIX A TO SUBPART C OF PART 430—PROCEDURES, INTERPRETATIONS AND POLICIES FOR CONSIDERATION OF NEW OR REVISED ENERGY CONSERVATION STANDARDS FOR CONSUMER PRODUCTS

1. Objectives
2. Scope
3. Setting Priorities for Rulemaking Activity
4. Process for Developing Efficiency Standards and Factors to be Considered
5. Policies on Selection of Standards
6. Effective Date of a Standard
7. Test Procedures
8. Joint Stakeholder Recommendations
9. Principles for the Conduct of Engineering Analysis
10. Principles for the Analysis of Impacts on Manufacturers
11. Principles for the Analysis of Impacts on Consumers
12. Consideration of Non-Regulatory Approaches
13. Crosscutting Analytical Assumptions
14. Deviations, Revisions, and Judicial Review

1. Objectives

This Appendix establishes procedures, interpretations and policies to guide the DOE in the consideration and promulgation of new or revised appliance efficiency standards under the Energy Policy and Conservation Act (EPCA). The Department's objectives in establishing these guidelines include:

(a) *Provide for early input from stakeholders.* The Department seeks to provide opportunities for public input early in the rulemaking process so that the initiation and direction of rulemakings is informed by comment from interested parties. Under the guidelines established by this Appendix, DOE will seek early input from interested parties in setting rulemaking priorities and structuring the analyses for particular products. Interested parties will be invited to provide input for the selection of design options and will help DOE identify analysis, data, and modeling needs. DOE will gather input from interested parties through a variety of mechanisms, including public workshops.

(b) *Increase predictability of the rulemaking timetable.* The Department seeks to make informed, strategic decisions about how to deploy its resources on the range of possible standards development activities, and to announce these prioritization decisions so that all interested parties have a common expectation about the timing of different rulemaking activities. The guidelines in this Appendix provide for setting priorities and timetables for standards development and test procedure modification and reflect these priorities in the Regulatory Agenda.

(c) *Increase use of outside technical expertise.* The Department seeks to expand its use of outside technical experts in evaluating product-specific engineering issues to ensure that decisions on technical issues are fully informed. The guidelines in this Appendix provide for increased use of outside technical experts in developing, performing and reviewing the analyses. Draft analytical results will be distributed for peer and stakeholder review.

(d) *Eliminate problematic design options early in the process.* The Department seeks to eliminate from consideration, early in the process, any design options that present unacceptable problems with respect to manufacturability, consumer utility, or safety, so that the detailed analysis can focus

only on viable design options. Under the guidelines in this Appendix, DOE will eliminate from consideration design options if it concludes that manufacture, installation or service of the design will be impractical, or that the design option will adversely affect the utility of the product, or if the design has adverse safety or health impacts. This screening will be done at the outset of a rulemaking.

(e) *Fully consider non-regulatory approaches.* The Department seeks to understand the effects of market forces and voluntary programs on encouraging the purchase of energy efficient products so that the incremental impacts of a new or revised standard can be accurately assessed and the Department can make informed decisions about where standards and voluntary ''market pull'' programs can be used most effectively. Under the guidelines in this Appendix, DOE will solicit information on the effectiveness of market forces and non-regulatory approaches for encouraging the purchase of energy efficient products, and will carefully consider this information in assessing the benefits of standards. In addition, DOE will continue to support voluntary efforts by manufacturers, retailers, utilities and others to increase product efficiency.

(f) *Conduct thorough analysis of impacts.* In addition to understanding the aggregate costs and benefits of standards, the Department seeks to understand the distribution of those costs and benefits among consumers, manufacturers and others, and the uncertainty associated with these analyses of costs and benefits, so that any adverse impacts on significant subgroups and uncertainty concerning any adverse impacts can be fully considered in selecting a standard. Under the guidelines in this Appendix, the analyses will consider the variability of impacts on significant groups of manufacturers and consumers in addition to aggregate costs and benefits, report the range of uncertainty associated with these impacts, and take into account cumulative impacts of regulation on manufacturers.

(g) *Use transparent and robust analytical methods.* The Department seeks to use qualitative and quantitative analytical methods that are fully documented for the public and that produce results that can be explained and reproduced, so that the analytical underpinnings for policy decisions on standards are as sound and well-accepted as possible. Under the guidelines in this Appendix, DOE will solicit input from interested parties in identifying analysis, data, and modeling needs with respect to measurement of impacts on manufacturers and consumers.

(h) *Articulate policies to guide selection of standards.* The Department seeks to adopt policies elaborating on the statutory criteria for selecting standards, so that interested parties are aware of the policies that will guide these decisions. Under the guidelines in this Appendix, policies for screening design options, selecting candidate standard levels, selecting a proposed standard level, and establishing the final standard are established.

(i) *Support efforts to build consensus on standards.* The Department seeks to encourage development of consensus proposals for new or revised standards because standards with such broad-based support are likely to balance effectively the economic, energy, and environmental interests affected by standards. Under the guidelines in this Appendix, DOE will support the development and submission of consensus recommendations for standards by representative groups of interested parties to the fullest extent possible.

(j) *Reduce time and cost of developing standards.* The Department seeks to establish a clear protocol for initiating and conducting standards rulemakings in order to eliminate time-consuming and costly missteps. Under the guidelines in this Appendix, increased and earlier involvement by interested parties and increased use of technical experts should minimize the need for re-analysis. This process should reduce the period between the publication of an Advance Notice of Proposed Rulemaking (ANOPR) and the publication of a final rule to not more than 18 months, and should decrease the government and private sector resources required to complete the standard development process.

2. Scope

(a) The procedures, interpretations and policies described in this Appendix will be fully applicable to:

(1) Rulemakings concerning new or revised Federal energy conservation standards for consumer products initiated after August 14, 1996, and

(2) Rulemakings concerning new or revised Federal energy conservation standards for consumer products that have been initiated but for which a Notice of Proposed Rulemaking (NOPR) has not been published as of August 14, 1996.

(b) For rulemakings described in paragraph (a)(2) of this section, to the extent analytical work has already been done or public comment on an ANOPR has already been provided, such analyses and comment will be considered, as appropriate, in proceeding under the new process.

(c) With respect to incomplete rulemakings concerning new or revised Federal energy conservation standards for consumer products for which a NOPR was published prior to August 14, 1996, the Department will conduct a case-by-case review to decide whether any of the analytical or procedural steps already completed should be repeated. In any case, the approach described

in this Appendix will be used to the extent possible to conduct any analytical or procedural steps that have not been completed.

3. Setting Priorities for Rulemaking Activity

(a) *Priority-setting analysis and development of list of priorities.* At least once a year, the Department will prepare an analysis of each of the factors identified in paragraph (d) of this section based on existing literature, direct communications with interested parties and other experts, and other available information. The results of this analysis will be used to develop rulemaking priorities and proposed schedules for the development and issuance of all rulemakings. The DOE analysis, priorities and proposed rulemaking schedules will be documented and distributed for review and comment.

(b) *Public review and comment.* Each year, DOE will invite public input to review and comment on the priority analysis.

(c) *Issuance of final listing of rulemaking priorities.* Each fall, the Department will issue, simultaneously with the issuance of the Administration's Regulatory Agenda, a final set of rulemaking priorities, the accompanying analysis, and the schedules for all priority rulemakings that it anticipates within the next two years.

(d) *Factors for priority-setting.* The factors to be considered by DOE in developing priorities and establishing schedules for conducting rulemakings will include:

(1) Potential energy savings.

(2) Potential economic benefits.

(3) Potential environmental or energy security benefits.

(4) Applicable deadlines for rulemakings.

(5) Incremental DOE resources required to complete rulemaking process.

(6) Other relevant regulatory actions affecting products.

(7) Stakeholder recommendations.

(8) Evidence of energy efficiency gains in the market absent new or revised standards.

(9) Status of required changes to test procedures.

(10) Other relevant factors.

4. Process for Developing Efficiency Standards and Factors to be Considered

This section describes the process to be used in developing efficiency standards and the factors to be considered in the process. The policies of the Department to guide the selection of standards and the decisions preliminary thereto are described in section 5.

(a) *Identifying and screening design options.* Once the Department has initiated a rulemaking for a specific product but before publishing an ANOPR, DOE will identify the product categories and design options to be analyzed in detail, and identify those design options eliminated from further consideration. Interested parties will be consulted to identify key issues, develop a list of design options, and to help the Department identify the expertise necessary to conduct the analysis.

(1) *Identification of issues for analysis.* The Department, in consultation with interested parties, will identify issues that will be examined in the standards development process.

(2) *Identification of experts and other interested parties for peer review.* DOE, in consultation with interested parties, will identify a group of independent experts and other interested parties who can provide expert review of the results of the engineering analysis and the subsequent impact analysis.

(3) *Identification and screening of design options.* In consultation with interested parties, the Department will develop a list of design options for consideration. Initially, the candidate design options will encompass all those technologies considered to be technologically feasible. Following the development of this initial list of design options, DOE will review each design option based on the factors described in paragraph (a)(4) of this section and the policies stated in section 5(b). The reasons for eliminating any design option at this stage of the process will be fully documented and published as part of the ANOPR. The technologically feasible design options that are not eliminated in this screening will be considered further in the Engineering Analysis described in paragraph (b) of this section.

(4) *Factors for screening of design options.* The factors for screening design options include:

(i) Technological feasibility. Technologies incorporated in commercial products or in working prototypes will be considered technologically feasible.

(ii) Practicability to manufacture, install and service. If mass production of a technology in commercial products and reliable installation and servicing of the technology could be achieved on the scale necessary to serve the relevant market at the time of the effective date of the standard, then that technology will be considered practicable to manufacture, install and service.

(iii) Adverse Impacts on Product Utility or Product Availability.

(iv) Adverse Impacts on Health or Safety.

(5) *Selection of contractors.* Using the specifications of necessary contractor expertise developed in consultation with interested parties, DOE will select appropriate contractors, subcontractors, and as necessary, expert consultants to perform the engineering analysis and the impact analysis.

(b) *Engineering analysis of design options and selection of candidate standard levels.* After design options are identified and screened, DOE will perform the engineering analysis and

the benefit/cost analysis and select the candidate standard levels based on these analyses. The results of the analyses will be published in a Technical Support Document (TSD) to accompany the ANOPR.

(1) *Identification of engineering analytical methods and tools.* DOE, in consultation with outside experts, will select the specific engineering analysis tools (or multiple tools, if necessary to address uncertainty) to be used in the analysis of the design options identified as a result of the screening analysis.

(2) *Engineering and life-cycle cost analysis of design options.* The DOE and its contractor will perform engineering and life-cycle cost analyses of the design options.

(3) *Review by expert group and stakeholders.* The results of the engineering and life-cycle cost analyses will be distributed for review by experts and interested parties. If appropriate, a public workshop will be conducted to review these results. The analyses will be revised as appropriate on the basis of this input.

(4) *New information relating to the factors used for screening design options.* If further information or analysis leads to a determination that a design option, or a combination of design options, has unacceptable impacts based on the policies stated in section 5(b), that design option or combination of design options will not be included in a candidate standard level.

(5) *Selection of candidate standard levels.* Based on the results of the engineering and life-cycle cost analysis of design options and the policies stated in section 5(c), DOE will select the candidate standard levels for further analysis.

(c) *Advance Notice of Proposed Rulemaking*—(1) *Documentation of decisions on candidate standard selection.* (i) If the screening analysis indicates that continued development of a standard is appropriate, the Department will publish an ANOPR in the FEDERAL REGISTER and will distribute a draft TSD containing the analyses performed to this point. The ANOPR will specify candidate standard levels but will not propose a particular standard. The ANOPR will also include the preliminary analysis of consumer life-cycle costs, national net present value, and energy impacts for the candidate standard levels based on the engineering analysis.

(ii) If the preliminary analysis indicates that no candidate standard level is likely to meet the criteria specified in law, that conclusion will be announced. In such cases, the Department may decide to proceed with a rulemaking that proposes not to adopt new or amended standards, or it may suspend the rulemaking and conclude that further action on such standards should be assigned a low priority under section 3.

(2) *Public comment and hearing.* There will be 75 days for public comment on the ANOPR with at least one public hearing or workshop.

(3) *Revisions based on comments.* Based on consideration of the comments received, any necessary changes to the engineering analysis or the candidate standard levels will be made.

If major changes are required at this stage, interested parties and experts will be given an opportunity to review the revised analysis.

(d) *Analysis of impacts and selection of proposed standard level.* After the ANOPR, economic analyses of the impacts of the candidate standard levels will be conducted. The Department will propose updated standards based on the results of the impact analysis.

(1) *Identification of issues for analysis.* The Department, in consultation with interested parties, will identify issues that will be examined in the impacts analysis.

(2) *Identification of analytical methods and tools.* DOE, in consultation with outside experts, will select the specific economic analysis tools (or multiple tools if necessary to address uncertainty) to be used in the analysis of the candidate standard levels.

(3) *Analysis of impacts.* DOE will conduct the analysis of the impacts of candidate standard levels including analysis of the factors described in paragraphs (d)(7)(ii)–(viii) of this section.

(4) *Review by expert group and stakeholders.* The results of the analysis of impacts will be distributed for review by experts and interested parties. If appropriate, a public workshop will be conducted to review these results. The analysis will be revised as appropriate on the basis of this input.

(5) *Efforts to develop consensus among stakeholders.* If a representative group of interested parties undertakes to develop joint recommendations to the Department on standards, DOE will consider deferring its impact analysis until these discussions are completed or until participants in the efforts indicate that they are unable to reach a timely agreement.

(6) *Selection of proposed standard level based on analysis of impacts.* On the basis of the analysis of the factors described in paragraph (d)(7) of this section and the policies stated in section 5(e), DOE will select a proposed standard level.

(7) *Factors to be considered in selecting a proposed standard.* The factors to be considered in selection of a proposed standard include:

(i) Consensus stakeholder recommendations.

(ii) Impacts on manufacturers. The analysis of manufacturer impacts will include: Estimated impacts on cash flow; assessment of impacts on manufacturers of specific categories of products and small manufacturers; assessment of impacts on manufacturers of multiple product-specific Federal regulatory requirements, including efficiency standards

for other products and regulations of other agencies; and impact on manufacturing capacity, plant closures, and loss of capital investment.

(iii) Impacts on consumers. The analysis of consumer impacts will include: Estimated impacts on consumers based on national average energy prices and energy usage; assessments of impacts on subgroups of consumers based on major regional differences in usage or energy prices and significant variations in installation costs or performance; sensitivity analyses using high and low discount rates and high and low energy price forecasts; consideration of changes to product utility and other impacts of likely concern to all or some consumers, based to the extent practicable on direct input from consumers; estimated life-cycle cost with sensitivity analysis; and consideration of the increased first cost to consumers and the time required for energy cost savings to pay back these first costs.

(iv) Impacts on competition.

(v) Impacts on utilities. The analysis of utility impacts will include estimated marginal impacts on electric and gas utility costs and revenues.

(vi) National energy, economic and employment impacts. The analysis of national energy, economic and employment impacts will include: Estimated energy savings by fuel type; estimated net present value of benefits to all consumers; and estimates of the direct and indirect impacts on employment by appliance manufacturers, relevant service industries, energy suppliers and the economy in general.

(vii) Impacts on the environment and energy security. The analysis of environmental and energy security impacts will include estimated impacts on emissions of carbon and relevant criteria pollutants, impacts on pollution control costs, and impacts on oil use.

(viii) Impacts of non-regulatory approaches. The analysis of energy savings and consumer impacts will incorporate an assessment of the impacts of market forces and existing voluntary programs in promoting product efficiency, usage and related characteristics in the absence of updated efficiency standards.

(ix) New information relating to the factors used for screening design options.

(e) *Notice of Proposed Rulemaking*—(1) *Documentation of decisions on proposed standard selection.* The Department will publish a NOPR in the FEDERAL REGISTER that proposes standard levels and explains the basis for the selection of those proposed levels, and will distribute a draft TSD documenting the analysis of impacts. As required by §325(p)(2) of EPCA, the NOPR also will describe the maximum improvement in energy efficiency or maximum reduction in energy use that is technologically feasible and, if the proposed standards would not achieve these levels, the reasons for proposing different standards.

(2) *Public comment and hearing.* There will be 75 days for public comment on the NOPR, with at least one public hearing or workshop.

(3) *Revisions to impact analyses and selection of final standard.* Based on the public comments received and the policies stated in section 5(f), DOE will review the proposed standard and impact analyses, and make modifications as necessary. If major changes to the analyses are required at this stage, interested parties and experts will be given an opportunity to review the revised analyses.

(f) *Notice of Final Rulemaking.* The Department will publish a Notice of Final Rulemaking in the FEDERAL REGISTER that promulgates standard levels and explains the basis for the selection of those standards, accompanied by a final TSD.

5. Policies on Selection of Standards.

(a) *Purpose.* (1) Section 4 describes the process that will be used to consider new or revised energy efficiency standards and lists a number of factors and analyses that will be considered at specified points in the process. Department policies co12467ncerning the selection of new or revised standards, and decisions preliminary thereto, are described in this section.

These policies are intended to elaborate on the statutory criteria provided in section 325 of the EPCA, 42 U.S.C. 6295.

(2) The policies described below are intended to provide guidance for making the determinations required by EPCA. This statement of policy is not intended to preclude consideration of any information pertinent to the statutory criteria. The Department will consider all pertinent information in determining whether a new or revised standard is consistent with the statutory criteria. Moreover, the Department will not be guided by a policy in this section if, in the particular circumstances presented, such a policy would lead to a result inconsistent with the criteria in section 325 of EPCA.

(b) *Screening design options.* Section 4(a)(4) lists factors to be considered in screening design options. These factors will be considered as follows in determining whether a design option will receive any further consideration:

(1) *Technological feasibility.* Technologies that are not incorporated in commercial products or in working prototypes will not be considered further.

(2) *Practicability to manufacture, install and service.* If it is determined that mass production of a technology in commercial products and reliable installation and servicing of the technology could not be achieved on the scale necessary to serve the relevant market

at the time of the effective date of the standard, then that technology will not be considered further.

(3) *Impacts on product utility to consumers.* If a technology is determined to have significant adverse impact on the utility of the product to significant subgroups of consumers, or result in the unavailability of any covered product type with performance characteristics (including reliability), features, sizes, capacities, and volumes that are substantially the same as products generally available in the U.S. at the time, it will not be considered further.

(4) *Safety of technologies.* If it is determined that a technology will have significant adverse impacts on health or safety, it will not be considered further.

(c) *Identification of candidate standard levels.* Based on the results of the engineering and cost and benefit analyses of design options, DOE will identify the candidate standard levels for further analysis. Candidate standard levels will be selected as follows:

(1) *Costs and savings of design options.* Design options which have payback periods that exceed the average life of the product or which cause life-cycle cost increases relative to the base case, using typical fuel costs, usage and discount rates, will not be used as the basis for candidate standard levels.

(2) *Further information on factors used for screening design options.* If further information or analysis leads to a determination that a design option, or a combination of design options, has unacceptable impacts under the policies stated in paragraph (b) of this section, that design option or combination of design options will not be included in a candidate standard level.

(3) *Selection of candidate standard levels.* Candidate standard levels, which will be identified in the ANOPR and on which impact analyses will be conducted, will be based on the remaining design options.

(i) The range of candidate standard levels will typically include:

(A) The most energy efficient combination of design options;

(B) The combination of design options with the lowest life-cycle cost; and

(C) A combination of design options with a payback period of not more than three years.

(ii) Candidate standard levels that incorporate noteworthy technologies or fill in large gaps between efficiency levels of other candidate standard levels also may be selected.

(d) *Advance notice of proposed rulemaking.* New information provided in public comments on the ANOPR will be considered to determine whether any changes to the candidate standard levels are needed before proceeding to the analysis of impacts. This review, and any appropriate adjustments, will be based on the policies in paragraph (c) of this section.

(e) *Selection of proposed standard.* Based on the results of the analysis of impacts, DOE will select a standard level to be proposed for public comment in the NOPR. Section 4(d)(7) lists the factors to be considered in selecting a proposed standard level. Section 325(o)(2)(A) of EPCA provides that any new or revised standard must be designed to achieve the maximum improvement in energy efficiency that is determined to be technologically feasible and economically justified.

(1) *Statutory policies.* The fundamental policies concerning selection of standards are established in the EPCA, including the following:

(i) A candidate standard level will not be proposed or promulgated if the Department determines that it is not technologically feasible and economically justified. See EPCA section 325(o)(3)(B). A standard level is economically justified if the benefits exceed the burdens. See EPCA section 325(o)(2)(B)(i). A standard level is rebuttably presumed to be economically justified if the payback period is three years or less. See EPCA section 325(o)(2)(B)(iii).

(ii) If the Department determines that a standard level is likely to result in the unavailability of any covered product type with performance characteristics (including reliability), features, sizes, capacities, and volumes that are substantially the same as products generally available in the U.S. at the time, that standard level will not be proposed. See EPCA section 325(o)(4).

(iii) If the Department determines that a standard level would not result in significant conservation of energy, that standard level will not be proposed. See EPCA section 325(o)(3)(B).

(2) *Selection of proposed standard on the basis of consensus stakeholder recommendations.* Development of consensus proposals for new or revised standards is an effective mechanism for balancing the economic, energy, and environmental interests affected by standards. Thus, notwithstanding any other policy on selection of proposed standards, a consensus recommendation on an updated efficiency level submitted by a group that represents all interested parties will be proposed by the Department if it is determined to meet the statutory criteria.

(3) *Considerations in assessing economic justification.*

(i) The following policies will guide the application of the economic justification criterion in selecting a proposed standard:

(A) If the Department determines that a candidate standard level would result in a negative return on investment for the industry, would significantly reduce the value of the industry, or would cause significant adverse impacts to a significant subgroup of manufacturers (including small manufacturing businesses), that standard level will

be presumed not to be economically justified unless the Department determines that specifically identified expected benefits of the standard would outweigh this and any other expected adverse effects.

(B) If the Department determines that a candidate standard level would be the direct cause of plant closures, significant losses in domestic manufacturer employment, or significant losses of capital investment by domestic manufacturers, that standard level will be presumed not to be economically justified unless the Department determines that specifically identified expected benefits of the standard would outweigh this and any other expected adverse effects.

(C) If the Department determines that a candidate standard level would have a significant adverse impact on the environment or energy security, that standard level will be presumed not to be economically justified unless the Department determines that specifically identified expected benefits of the standard would outweigh this and any other expected adverse effects.

(D) If the Department determines that a candidate standard level would not result in significant energy conservation relative to non-regulatory approaches, that standard level will be presumed not to be economically justified unless the Department determines that other specifically identified expected benefits of the standard would outweigh the expected adverse effects.

(E) If the Department determines that a candidate standard level is not consistent with the policies relating to practicability to manufacture, consumer utility, or safety in paragraphs (b) (2), (3) and (4) of this section, that standard level will be presumed not to be economically justified unless the Department determines that specifically identified expected benefits of the standard would outweigh this and any other expected adverse effects.

(F) If the Department determines that a candidate standard level is not consistent with the policies relating to consumer costs in paragraph (c)(1) of this section, that standard level will be presumed not to be economically justified unless the Department determines that specifically identified expected benefits of the standard would outweigh this and any other expected adverse effects.

(G) If the Department determines that a candidate standard level will have significant adverse impacts on a significant subgroup of consumers (including low-income consumers), that standard level will be presumed not to be economically justified unless the Department determines that specifically identified expected benefits of the standard would outweigh this and any other expected adverse effects.

(H) If the Department or the Department of Justice determines that a candidate standard level would have significant anticompetitive effects, that standard level will be presumed not to be economically justified unless the Department determines that specifically identified expected benefits of the standard would outweigh this and any other expected adverse effects.

(ii) The basis for a determination that triggers any presumption in paragraph (e)(3)(i) of this section and the basis for a determination that an applicable presumption has been rebutted will be supported by substantial evidence in the record and the evidence and rationale for making these determinations will be explained in the NOPR.

(iii) If none of the policies in paragraph (e)(3)(i) of this section is found to be dispositive, the Department will determine whether the benefits of a candidate standard level exceed the burdens considering all the pertinent information in the record.

(f) *Selection of a final standard.* New information provided in the public comments on the NOPR and any analysis by the Department of Justice concerning impacts on competition of the proposed standard will be considered to determine whether any change to the proposed standard level is needed before proceeding to the final rule. The same policies used to select the proposed standard level, as described in section 5(e) above, will be used to guide the selection of the final standard level.

6. Effective Date of a Standard

The effective date for new or revised standards will be established so that the period between the publication of the final rule and the effective date is not less than any period between the dates for publication and effective date provided for in EPCA. The effective date of any revised standard will be established so that the period between the effective date of the prior standard and the effective date of such revised standard is not less than period between the two effective dates provided for in EPCA.

7. Test Procedures

(a) *Identifying the need to modify test procedures.* DOE, in consultation with interested parties, experts, and the National Institute of Standards and Technology, will attempt to identify any necessary modifications to established test procedures when initiating the standards development process.

(b) *Developing and proposing revised test procedures.* Needed modifications to test procedures will be identified in consultation with experts and interested parties early in the screening stage of the standards development process. Any necessary modifications will be proposed before issuance of an ANOPR in the standards development process.

(c) *Issuing final test procedure modification.* Final, modified test procedures will be issued prior to the NOPR on proposed standards.

(d) *Effective date of modified test procedures.* If required only for the evaluation and issuance of updated efficiency standards, modified test procedures typically will not go into effect until the effective date of updated standards.

8. Joint Stakeholder Recommendations

(a) *Joint recommendations.* Consensus recommendations, and supporting analyses, submitted by a representative group of interested parties will be given substantial weight by DOE in the development of a proposed rule. See section 5(e)(2). If the supporting analyses provided by the group addresses all of the statutory criteria and uses valid economic assumptions and analytical methods, DOE expects to use this supporting analyses as the basis of a proposed rule. The proposed rule will explain any deviations from the consensus recommendations from interested parties.

(b) *Breadth of participation.* Joint recommendations will be of most value to the Department if the participants are reasonably representative of those interested in the outcome of the standards development process, including manufacturers, consumers, utilities, states and representatives of environmental or energy efficiency interest groups.

(c) *DOE support of consensus development, including impact analyses.* In order to facilitate such consensus development, DOE will make available, upon request, appropriate technical and legal support to the group and will provide copies of all relevant public documents and analyses. The Department also will consider any requests for its active participation in such discussions, recognizing that the procedural requirements of the Federal Advisory Committee Act may apply to such participation.

9. Principles for the Conduct of Engineering Analysis

(a) The purpose of the engineering analysis is to develop the relationship between efficiency and cost of the subject product. The Department will use the most appropriate means available to determine the efficiency/cost relationship, including an overall system approach or engineering modeling to predict the improvement in efficiency that can be expected from individual design options as discussed in the paragraphs below. From this efficiency/cost relationship, measures such as payback, life cycle cost, and energy savings can be developed. The Department, in consultation with interested parties, will identify issues that will be examined in the engineering analysis and the types of specialized expertise that may be required. With these specifications, DOE will select appropriate contractors, subcontractors, and expert consultants, as necessary, to perform the engineering analysis and the impact analysis. Also, the Department will consider data, information and analyses received from interested parties for use in the analysis wherever feasible.

(b) The engineering analysis begins with the list of design options developed in consultation with the interested parties as a result of the screening process. In consultation with the technology/industry expert peer review group, the Department will establish the likely cost and performance improvement of each design option. Ranges and uncertainties of cost and performance will be established, although efforts will be made to minimize uncertainties by using measures such as test data or component or material supplier information where available. Estimated uncertainties will be carried forward in subsequent analyses. The use of quantitative models will be supplemented by qualitative assessments as appropriate.

(c) The next step includes identifying, modifying or developing any engineering models necessary to predict the efficiency impact of any one or combination of design options on the product. A base case configuration or starting point will be established as well as the order and combination/blending of the design options to be evaluated. The DOE, utilizing expert consultants, will then perform the engineering analysis and develop the cost efficiency curve for the product. The cost efficiency curve and any necessary models will be subject to peer review before being issued with the ANOPR.

10. Principles for the Analysis of Impacts on Manufacturers

(a) *Purpose.* The purpose of the manufacturer analysis is to identify the likely impacts of efficiency standards on manufacturers. The Department will analyze the impact of standards on manufacturers with substantial input from manufacturers and other interested parties. The use of quantitative models will be supplemented by qualitative assessments by industry experts. This section describes the principles that will be used in conducting future manufacturing impact analysis.

(b) *Issue identification.* In the impact analysis stage (section 4(d)), the Department, in consultation with interested parties, will identify issues that will require greater consideration in the detailed manufacturer impact analysis. Possible issues may include identification of specific types or groups of manufacturers and concerns over access to technology. Specialized contractor expertise, empirical data requirements, and analytical tools required to perform the manufacturer impact analysis also would be identified at this stage.

(c) *Industry characterization*. Prior to initiating detailed impact studies, the Department will seek input on the present and past industry structure and market characteristics. Input on the following issues will be sought:

(1) Manufacturers and their relative market shares;

(2) Manufacturer characteristics, such as whether manufacturers make a full line of models or serve a niche market;

(3) Trends in the number of manufacturers;

(4) Financial situation of manufacturers;

(5) Trends in product characteristics and retail markets; and

(6) Identification of other relevant regulatory actions and a description of the nature and timing of any likely impacts.

(d) *Cost impacts on manufacturers*. The costs of labor, material, engineering, tooling, and capital are difficult to estimate, manufacturer-specific, and usually proprietary. The Department will seek input from interested parties on the treatment of cost issues. Manufacturers will be encouraged to offer suggestions as to possible sources of data and appropriate data collection methodologies. Costing issues to be addressed include:

(1) Estimates of total cost impacts, including product-specific costs (based on cost impacts estimated for the engineering analysis) and front-end investment/conversion costs for the full range of product models.

(2) Range of uncertainties in estimates of average cost, considering alternative designs and technologies which may vary cost impacts and changes in costs of material, labor and other inputs which may vary costs.

(3) Variable cost impacts on particular types of manufacturers, considering factors such as atypical sunk costs or characteristics of specific models which may increase or decrease costs.

(e) *Impacts on product sales, features, prices and cost recovery*. In order to make manufacturer cash flow calculations, it is necessary to predict the number of products sold and their sale price. This requires an assessment of the likely impacts of price changes on the number of products sold and on typical features of models sold. Past analyses have relied on price and shipment data generated by economic models. The Department will develop additional estimates of prices and shipments by drawing on multiple sources of data and experience including: actual shipment and pricing experience, data from manufacturers, retailers and other market experts, financial models, and sensitivity analyses. The possible impacts of candidate standard levels on consumer choices among competing fuels will be explicitly considered where relevant.

(f) *Measures of impact*. The manufacturer impact analysis will estimate the impacts of candidate standard levels on the net cash flow of manufacturers. Computations will be performed for the industry as a whole and for typical and atypical manufacturers. The exact nature and the process by which the analysis will be conducted will be determined by DOE, in conjunction with interested parties. Impacts to be analyzed include:

(1) Industry net present value, with sensitivity analyses based on uncertainty of costs, sales prices and sales volumes;

(2) Cash flows, by year;

(3) Other measures of impact, such as revenue, net income and return on equity, as appropriate;

The characteristics of atypical manufacturers worthy of special consideration will be determined in consultation with manufacturers and other interested parties and may include: manufacturers incurring higher or lower than average costs; and manufacturers experiencing greater or fewer adverse impacts on sales. Alternative scenarios based on other methods of estimating cost or sales impacts also will be performed, as needed.

(g) *Cumulative impacts of other Federal regulatory actions*. (1) The Department will recognize and seek to mitigate the overlapping effects on manufacturers of new or revised DOE standards and other regulatory actions affecting the same products. DOE will analyze and consider the impact on manufacturers of multiple product-specific regulatory actions. These factors will be considered in setting rulemaking priorities, assessing manufacturer impacts of a particular standard, and establishing the effective date for a new or revised standard. In particular, DOE will seek to propose effective dates for new or revised standards that are appropriately coordinated with other regulatory actions to mitigate any cumulative burden.

(2) If the Department determines that a proposed standard would impose a significant impact on product manufacturers within three years of the effective date of another DOE standard that imposes significant impacts on the same manufacturers (or divisions thereof, as appropriate), the Department will, in addition to evaluating the impact on manufacturers of the proposed standard, assess the joint impacts of both standards on manufacturers.

(3) If the Department is directed to establish or revise standards for products that are components of other products subject to standards, the Department will consider the interaction between such standards in setting rulemaking priorities and assessing manufacturer impacts of a particular standard. The Department will assess, as part of the engineering and impact analyses, the cost of components subject to efficiency standards.

(h) *Summary of quantitative and qualitative assessments*. The summary of quantitative and qualitative assessments will contain a description and discussion of uncertainties.

Alternative estimates of impacts, resulting from the different potential scenarios developed throughout the analysis, will be explicitly presented in the final analysis results.

(i) *Key modeling and analytical tools.* In its assessment of the likely impacts of standards on manufacturers, the Department will use models which are clear and understandable, feature accessible calculations, and have assumptions that are clearly explained. As a starting point, the Department will use the Government Regulatory Impact Model (GRIM). The Department will consider any enhancements to the GRIM that are suggested by interested parties. If changes are made to the GRIM methodology, DOE will provide notice and seek public input. The Department will also support the development of economic models for price and volume forecasting. Research required to update key economic data will be considered.

11. Principles for the Analysis of Impacts on Consumers

(a) *Early consideration of impacts on consumer utility.* The Department will consider at the earliest stages of the development of a standard whether particular design options will lessen the utility of the covered products to the consumer. See section 4(a).

(b) *Impacts on product availability.* The Department will determine, based on consideration of information submitted during the standard development process, whether a proposed standard is likely to result in the unavailability of any covered product type with performance characteristics (including reliability), features, sizes, capacities, and volumes that are substantially the same as products generally available in the U.S. at the time. DOE will not promulgate a standard if it concludes that it would result in such unavailability.

(c) *Department of justice review.* As required by law, the Department will solicit the views of the Justice Department on any lessening of competition that is likely to result from the imposition of a proposed standard and will give the views provided full consideration in assessing economic justification of a proposed standard. In addition, DOE may consult with the Department of Justice at earlier stages in the standards development process to seek to obtain preliminary views on competitive impacts.

(d) *Variation in consumer impacts.* The Department will use regional analysis and sensitivity analysis tools, as appropriate, to evaluate the potential distribution of impacts of candidate standards levels among different subgroups of consumers. The Department will consider impacts on significant segments of consumers in determining standards levels. Where there are significant negative impacts on identifiable subgroups, DOE will consider the efficacy of voluntary approaches as a means to achieve potential energy savings.

(e) *Payback period and first cost.* (1) In the assessment of consumer impacts of standards, the Department will consider Life-Cycle Cost, Payback Period and Cost of Conserved Energy to evaluate the savings in operating expenses relative to increases in purchase price. The Department intends to increase the level of sensitivity analysis and scenario analysis for future rulemakings. The results of these analyses will be carried throughout the analysis and the ensuing uncertainty described.

(2) If, in the analysis of consumer impacts, the Department determines that a candidate standard level would result in a substantial increase in the product first costs to consumers or would not pay back such additional first costs through energy cost savings in less than three years, Department will specifically assess the likely impacts of such a standard on low-income households, product sales and fuel switching.

12. Consideration of Non-Regulatory Approaches

(a) The Department recognizes that voluntary or other non-regulatory efforts by manufacturers, utilities and other interested parties can result in substantial efficiency improvements. The Department intends to consider fully the likely effects of non-regulatory initiatives on product energy use, consumer utility and life cycle costs, manufacturers, competition, utilities and the environment, as well as the distribution of these impacts among different regions, consumers, manufacturers and utilities. DOE will attempt to base its assessment on the actual impacts of such initiatives to date, but also will consider information presented regarding the impacts that any existing initiative might have in the future. Such information is likely to include a demonstration of the strong commitment of manufacturers, distribution channels, utilities or others to such voluntary efficiency improvements. This information will be used in assessing the likely incremental impacts of establishing or revising standards, in assessing appropriate effective dates for new or revised standards and in considering DOE support of non-regulatory initiatives.

(b) DOE believes that non-regulatory approaches are valuable complements to the standards program. In particular, DOE will consider pursuing voluntary programs where it appears that highly efficient products can obtain a significant market share but less efficient products cannot be eliminated altogether because, for instance, of unacceptable adverse impacts on a significant subgroup of consumers. In making this assessment, the Department will consider the success more efficient designs have had in the market,

their acceptance to date, and their potential market penetration.

13. Crosscutting Analytical Assumptions

In selecting values for certain crosscutting analytical assumptions, DOE expects to continue relying upon the following sources and general principles:

(a) *Underlying economic assumptions.* The appliance standards analyses will generally use the same economic growth and development assumptions that underlie the most current Annual Energy Outlook (AEO) published by the Energy Information Administration (EIA).

(b) *Energy price and demand trends.* Analyses of the likely impact of appliance standards on typical users will generally adopt the mid-range energy price and demand scenario of the EIA's most current AEO. The sensitivity of such estimated impacts to possible variations in future energy prices are likely to be examined using the EIA's high and low energy price scenarios.

(c) *Product-specific energy-efficiency trends, without updated standards.* Product specific energy-efficiency trends will be based on a combination of the efficiency trends forecast by the EIA's residential and commercial demand model of the National Energy Modeling System (NEMS) and product-specific assessments by DOE and its contractors with input from interested parties.

(d) *Discount rates.* For residential and commercial consumers, ranges of three different real discount rates will be used. For residential consumers, the mid-range discount rate will represent DOE's approximation of the average financing cost (or opportunity costs of reduced savings) experienced by typical consumers. Sensitivity analyses will be performed using discount rates reflecting the costs more likely to be experienced by residential consumers with little or no savings and credit card financing and consumers with substantial savings. For commercial users, a mid-range discount rate reflecting the DOE's approximation of the average real rate of return on commercial investment will be used, with sensitivity analyses being performed using values indicative of the range of real rates of return likely to be experienced by typical commercial businesses. For national net present value calculations, DOE would use the Administration's approximation of the average real rate of return on private investment in the U.S. economy. For manufacturer impacts, DOE plans to use a range of real discount rates which are representative of the real rates of return experienced by typical U.S. manufacturers affected by the program.

(e) *Environmental impacts.* The emission rates of carbon, sulfur oxides and nitrogen oxides used by DOE to calculate the physical quantities of emissions likely to be avoided by candidate standard levels will be based on the current average carbon emissions of the U.S. electric utilities and on the projected rates of emissions of sulfur and nitrogen oxides. Projected rates of emissions, if available, will be used for the estimation of any other environmental impacts. The Department will consider the effects of the proposed standards on these emissions in reaching a decision about whether the benefits of the proposed standards exceed their burdens but will not determine the monetary value of these environmental externalities.

14. Deviations, Revisions, and Judicial Review

(a) *Deviations.* This Appendix specifies procedures, interpretations and policies for the development of new or revised energy efficiency standards in considerable detail. As the approach described in this Appendix is applied to the development of particular standards, the Department may find it necessary or appropriate to deviate from these procedures, interpretations or policies. If the Department concludes that such deviations are necessary or appropriate in a particular situation, DOE will provide interested parties with notice of the deviation and an explanation.

(b) *Revisions.* If the Department concludes that changes to the procedures, interpretations or policies in this Appendix are necessary or appropriate, DOE will provide notice in the FEDERAL REGISTER of modifications to this Appendix with an accompanying explanation. DOE expects to consult with interested parties prior to any such modification.

(c) *Judicial review.* The procedures, interpretations, and policies stated in this Appendix are not intended to establish any new cause of action or right to judicial review.

[61 FR 36981, July 15, 1996]

Subpart D—Petitions To Exempt State Regulation From Preemption; Petitions to Withdraw Exemption of State Regulation

SOURCE: 54 FR 6078, Feb. 7, 1989, unless otherwise noted.

§ 430.40 Purpose and scope.

(a) This subpart prescribes the procedures to be followed in connection with petitions requesting a rule that a State regulation prescribing an energy conservation standard, water conservation standard (in the case of faucets, showerheads, water closets, and urinals), or other requirement respecting energy efficiency, energy use, or water

use (in the case of faucets, showerheads, water closets, and urinals) of a type (or class) of covered product not be preempted.

(b) This subpart also prescribes the procedures to be followed in connection with petitions to withdraw a rule exempting a State regulation prescribing an energy conservation standard, water conservation standard (in the case of faucets, showerheads, water closets, and urinals), or other requirement respecting energy efficiency, energy use, or water use (in the case of faucets, showerheads, water closets, and urinals) of a type (or class) of covered product.

[63 FR 13318, Mar. 18, 1998]

§ 430.41 Prescriptions of a rule.

(a) *Criteria for exemption from preemption*. Upon petition by a State which has prescribed an energy conservation standard, water conservation standard (in the case of faucets, showerheads, water closets, and urinals), or other requirement for a type or class of covered equipment for which a Federal energy conservation standard or water conservation standard is applicable, the Secretary shall prescribe a rule that such standard not be preempted if he determines that the State has established by a preponderance of evidence that such requirement is needed to meet unusual and compelling State or local energy interests or water interests. For the purposes of this section, the term ''unusual and compelling State or local energy interests or water interests'' means interests which are substantially different in nature or magnitude than those prevailing in the U.S. generally, and are such that when evaluated within the context of the State's energy plan and forecast, or water plan and forecast the costs, benefits, burdens, and reliability of energy savings or water savings resulting from the State regulation make such regulation preferable or necessary when measured against the costs, benefits, burdens, and reliability of alternative approaches to energy savings or water savings or production, including reliance on reasonably predictable market-induced improvements in efficiency of all equipment subject to the State regulation. The Secretary may not prescribe such a rule if he finds that interested persons have established, by a preponderance of the evidence, that the State's regulation will significantly burden manufacturing, marketing, distribution, sale or servicing of the covered equipment on a national basis. In determining whether to make such a finding, the Secretary shall evaluate all relevant factors including: the extent to which the State regulation will increase manufacturing or distribution costs of manufacturers, distributors, and others; the extent to which the State regulation will disadvantage smaller manufacturers, distributors, or dealers or lessen competition in the sale of the covered product in the State; the extent to which the State regulation would cause a burden to manufacturers to redesign and produce the covered product type (or class), taking into consideration the extent to which the regulation would result in a reduction in the current models, or in the projected availability of models, that could be shipped on the effective date of the regulation to the State and within the U.S., or in the current or projected sales volume of the covered product type (or class) in the State and the U.S.; and the extent to which the State regulation is likely to contribute significantly to a proliferation of State appliance efficiency requirements and the cumulative impact such requirements would have. The Secretary may not prescribe such a rule if he finds that such a rule will result in the unavailability in the State of any covered product (or class) of performance characteristics (including reliability), features, sizes, capacities, and volumes that are substantially the same as those generally available in the State at the time of the Secretary's finding. The failure of some classes (or types) to meet this criterion shall not affect the Secretary's determination of whether to prescribe a rule for other classes (or types).

(1) *Requirements of petition for exemption from preemption*. A petition from a State for a rule for exemption from preemption shall include the information listed in paragraphs (a)(1)(i)

through (a)(1)(vi) of this section. A petition for a rule and correspondence relating to such petition shall be available for public review except for confidential or proprietary information submitted in accordance with the Department of Energy's Freedom of Information Regulations set forth in 10 CFR part 1004:

(i) The name, address, and telephone number of the petitioner;

(ii) A copy of the State standard for which a rule exempting such standard is sought;

(iii) A copy of the State's energy plan or water plan and forecast;

(iv) Specification of each type or class of covered product for which a rule exempting a standard is sought;

(v) Other information, if any, believed to be pertinent by the petitioner; and

(vi) Such other information as the Secretary may require.

(2) [Reserved]

(b) *Criteria for exemption from preemption when energy emergency conditions or water emergency conditions (in the case of faucets, showerheads, water closets, and urinals) exist within State.* Upon petition by a State which has prescribed an energy conservation standard or water conservation standard (in the case of faucets, showerheads, water closets, and urinals) or other requirement for a type or class of covered product for which a Federal energy conservation standard or water conservation standard is applicable, the Secretary may prescribe a rule, effective upon publication in the FEDERAL REGISTER, that such State regulation not be preempted if he determines that in addition to meeting the requirements of paragraph (a) of this section the State has established that: an energy emergency condition or water emergency condition exists within the State that imperils the health, safety, and welfare of its residents because of the inability of the State or utilities within the State to provide adequate quantities of gas, electric energy, or water to its residents at less than prohibitive costs; and cannot be substantially alleviated by the importation of energy or water or the use of interconnection agreements; and the State regulation is necessary to alleviate substantially such condition.

(1) *Requirements of petition for exemption from preemption when energy emergency conditions or water emergency conditions (in the case of faucets, showerheads, water closets, and urinals) exist within a State.* A petition from a State for a rule for exemption from preemption when energy emergency conditions or water emergency conditions exist within a State shall include the information listed in paragraphs (a)(1)(i) through (a)(1)(vi) of this section. A petition shall also include the information prescribed in paragraphs (b)(1)(i) through (b)(1)(iv) of this section, and shall be available for public review except for confidential or proprietary information submitted in accordance with the Department of Energy's Freedom of Information Regulations set forth in 10 CFR part 1004:

(i) A description of the energy emergency condition or water emergency condition (in the case of faucets, showerheads, water closets, and urinals) which exists within the State, including causes and impacts.

(ii) A description of emergency response actions taken by the State and utilities within the State to alleviate the emergency condition;

(iii) An analysis of why the emergency condition cannot be alleviated substantially by importation of energy or water or the use of interconnection agreements; and

(iv) An analysis of how the State standard can alleviate substantially such emergency condition.

(2) [Reserved]

(c) *Criteria for withdrawal of a rule exempting a State standard.* Any person subject to a State standard which, by rule, has been exempted from Federal preemption and which prescribes an energy conservation standard or water conservation standard (in the case of faucets, showerheads, water closets, and urinals) or other requirement for a type or class of a covered product, when the Federal energy conservation standard or water conservation standard (in the case of faucets, showerheads, water closets, and urinals) for such product subsequently is amended, may petition the Secretary requesting that the exemption rule be

withdrawn. The Secretary shall consider such petition in accordance with the requirements of paragraph (a) of this section, except that the burden shall be on the petitioner to demonstrate that the exemption rule received by the State should be withdrawn as a result of the amendment to the Federal standard. The Secretary shall withdraw such rule if he determines that the petitioner has shown the rule should be withdrawn.

(1) *Requirements of petition to withdraw a rule exempting a State standard.* A petition for a rule to withdraw a rule exempting a State standard shall include the information prescribed in paragraphs (c)(1)(i) through (c)(1)(vii) of this section, and shall be available for public review, except for confidential or proprietary information submitted in accordance with the Department of Energy's Freedom of Information Regulations set forth in 10 CFR part 1004:

(i) The name, address and telephone number of the petitioner;

(ii) A statement of the interest of the petitioner for which a rule withdrawing an exemption is sought;

(iii) A copy of the State standard for which a rule withdrawing an exemption is sought;

(iv) Specification of each type or class of covered product for which a rule withdrawing an exemption is sought;

(v) A discussion of the factors contained in paragraph (a) of this section;

(vi) Such other information, if any, believed to be pertinent by the petitioner; and

(vii) Such other information as the Secretary may require.

(2) [Reserved]

[63 FR 13318, Mar. 18, 1998]

§ 430.42 Filing requirements.

(a) *Service.* All documents required to be served under this subpart shall, if mailed, be served by first class mail. Service upon a person's duly authorized representative shall constitute service upon that person.

(b) *Obligation to supply information.* A person or State submitting a petition is under a continuing obligation to provide any new or newly discovered information relevant to that petition. Such information includes, but is not limited to, information regarding any other petition or request for action subsequently submitted by that person or State.

(c) *The same or related matters.* A person or State submitting a petition or other request for action shall state whether to the best knowledge of that petitioner the same or related issue, act, or transaction has been or presently is being considered or investigated by any State agency, department, or instrumentality.

(d) *Computation of time.* (1) Computing any period of time prescribed by or allowed under this subpart, the day of the action from which the designated period of time begins to run is not to be included. If the last day of the period is Saturday, or Sunday, or Federal legal holiday, the period runs until the end of the next day that is neither a Saturday, or Sunday or Federal legal holiday.

(2) Saturdays, Sundays, and intervening Federal legal holidays shall be excluded from the computation of time when the period of time allowed or prescribed is 7 days or less.

(3) When a submission is required to be made within a prescribed time, DOE may grant an extension of time upon good cause shown.

(4) Documents received after regular business hours are deemed to have been submitted on the next regular business day. Regular business hours for the DOE's National Office, Washington, DC, are 8:30 a.m. to 4:30 p.m.

(5) DOE reserves the right to refuse to accept, and not to consider, untimely submissions.

(e) *Filing of petitions.* (1) A petition for a rule shall be submitted in triplicate to: The Assistant Secretary for Conservation and Renewable Energy, U.S. Department of Energy, Section 327 Petitions, Appliance Efficiency Standards, Forrestal Building, 1000 Independence Avenue, SW., Washington, DC 20585.

(2) A petition may be submitted on behalf of more than one person. A joint petition shall indicate each person participating in the submission. A joint petition shall provide the information required by § 430.41 for each person on whose behalf the petition is submitted.

(3) All petitions shall be signed by the person(s) submitting the petition or by a duly authorized representative. If submitted by a duly authorized representative, the petition shall certify this authorization.

(4) A petition for a rule to withdraw a rule exempting a State regulation, all supporting documents, and all future submissions shall be served on each State agency, department, or instrumentality whose regulation the petitioner seeks to supersede. The petition shall contain a certification of this service which states the name and mailing address of the served parties, and the date of service.

(f) *Acceptance for filing*. (1) Within fifteen (15) days of the receipt of a petition, the Secretary will either accept it for filing or reject it, and the petitioner will be so notified in writing. The Secretary will serve a copy of this notification on each other party served by the petitioner. Only such petitions which conform to the requirements of this subpart and which contain sufficient information for the purposes of a substantive decision will be accepted for filing. Petitions which do not so conform will be rejected and an explanation provided to petitioner in writing.

(2) For purposes of the Act and this subpart, a petition is deemed to be filed on the date it is accepted for filing.

(g) *Docket*. A petition accepted for filing will be assigned an appropriate docket designation. Petitioner shall use the docket designation in all subsequent submissions.

§ 430.43 Notice of petition.

(a) Promptly after receipt of a petition and its acceptance for filing, notice of such petition shall be published in the FEDERAL REGISTER. The notice shall set forth the availability for public review of all data and information available, and shall solicit comments, data and information with respect to the determination on the petition. Except as may otherwise be specified, the period for public comment shall be 60 days after the notice appears in the FEDERAL REGISTER.

(b) In addition to the material required under paragraph (a) of this section, each notice shall contain a summary of the State regulation at issue and the petitioner's reasons for the rule sought.

§ 430.44 Consolidation.

DOE may consolidate any or all matters at issue in two or more proceedings docketed where there exist common parties, common questions of fact and law, and where such consolidation would expedite or simplify consideration of the issues. Consolidation shall not affect the right of any party to raise issues that could have been raised if consolidation had not occurred.

§ 430.45 Hearing.

The Secretary may hold a public hearing, and publish notice in the FEDERAL REGISTER of the date and location of the hearing, when he determines that such a hearing is necessary and likely to result in a timely and effective resolution of the issues. A transcript shall be kept of any such hearing.

§ 430.46 Disposition of petitions.

(a) After the submission of public comments under § 430.42(a), the Secretary shall prescribe a final rule or deny the petition within 6 months after the date the petition is filed.

(b) The final rule issued by the Secretary or a determination by the Secretary to deny the petition shall include a written statement setting forth his findings and conclusions, and the reasons and basis therefor. A copy of the Secretary's decision shall be sent to the petitioner and the affected State agency. The Secretary shall publish in the FEDERAL REGISTER a notice of the final rule granting or denying the petition and the reasons and basis therefor.

(c) If the Secretary finds that he cannot issue a final rule within the 6-month period pursuant to paragraph (a) of this section, he shall publish a notice in the FEDERAL REGISTER extending such period to a date certain, but no longer than one year after the date on which the petition was filed. Such notice shall include the reasons for the delay.

§ 430.47 Effective dates of final rules.

(a) A final rule exempting a State standard from Federal preemption will be effective:

(1) Upon publication in the FEDERAL REGISTER if the Secretary determines that such rule is needed to meet an ''energy emergency condition or water emergency condition (in the case of faucets, showerheads, water closets, and urinals)'' within the State.

(2) Three years after such rule is published in the FEDERAL REGISTER; or

(3) Five years after such rule is published in the FEDERAL REGISTER if the Secretary determines that such additional time is necessary due to the burdens of retooling, redesign or distribution.

(b) A final rule withdrawing a rule exempting a State standard will be effective upon publication in the FEDERAL REGISTER.

[54 FR 6078, Feb. 7, 1989, as amended at 63 FR 13319, Mar. 18, 1998]

§ 430.48 Request for reconsideration.

(a) Any petitioner whose petition for a rule has been denied may request reconsideration within 30 days of denial. The request shall contain a statement of facts and reasons supporting reconsideration and shall be submitted in writing to the Secretary.

(b) The denial of a petition will be reconsidered only where it is alleged and demonstrated that the denial was based on error in law or fact and that evidence of the error is found in the record of the proceedings.

(c) If the Secretary fails to take action on the request for reconsideration within 30 days, the request is deemed denied, and the petitioner may seek such judicial review as may be appropriate and available.

(d) A petitioner has not exhausted other administrative remedies until a request for reconsideration has been filed and acted upon or deemed denied.

§ 430.49 Finality of decision.

(a) A decision to prescribe a rule that a State energy conservation standard, water conservation standard (in the case of faucets, showerheads, water closets, and urinals) or other requirement not be preempted is final on the date the rule is issued, i.e., signed by the Secretary. A decision to prescribe such a rule has no effect on other regulations of a covered product of any other State.

(b) A decision to prescribe a rule withdrawing a rule exempting a State standard or other requirement is final on the date the rule is issued, i.e., signed by the Secretary. A decision to deny such a petition is final on the day a denial of a request for reconsideration is issued, i.e., signed by the Secretary.

[54 FR 6078, Feb. 7, 1989, as amended at 63 FR 13319, Mar. 18, 1998]

Subpart E—Small Business Exemptions

SOURCE: 54 FR 6080, Feb. 7, 1989, unless otherwise noted.

§ 430.50 Purpose and scope.

(a) This subpart establishes procedures for the submission and disposition of applications filed by manufacturers of covered consumer products with annual gross revenues that do not exceed $8 million to exempt them temporarily from all or part of energy conservation standards or water conservation standards (in the case of faucets, showerheads, water closets, and urinals) established by this part.

(b) The purpose of this subpart is to provide content and format requirements for manufacturers of covered consumer products with low annual gross revenues who desire to apply for temporary exemptions from applicable energy conservation standards or water conservation standards (in the case of faucets, showerheads, water closets, and urinals) .

[54 FR 6080, Feb. 7, 1989, as amended at 63 FR 13319, Mar. 18, 1998]

§ 430.51 Eligibility.

Any manufacturer of a covered product with annual gross revenues that do not exceed $8,000,000 from all its operations (including the manufacture and sale of covered products) for the 12-month period preceding the date of application may apply for an exemption. In determining the annual gross revenues of any manufacturer under this

subpart, the annual gross revenue of any other person who controls, is controlled, by, or is under common control with, such manufacturer shall be taken into account.

§ 430.52 Requirements for applications.

(a) Each application filed under this subpart shall be submitted in triplicate to: U.S. Department of Energy, Small Business Exemptions, Appliance Efficiency Standards, Assistant Secretary for Conservation and Renewable Energy, Forrestal Building, 1000 Independence Avenue, SW., Washington, DC 20585.

(b) An application shall be in writing and shall include the following:

(1) Name and mailing address of applicant;

(2) Whether the applicant controls, is controlled by, or is under common control with another manufacturer, and if so, the nature of that control relationship;

(3) The text or substance of the standard or portion thereof for which the exemption is sought and the length of time desired for the exemption;

(4) Information showing the annual gross revenue of the applicant for the preceding 12-month period from all of its operations (including the manufacture and sale of covered products):

(5) Information to show that failure to grant an exemption is likely to result in a lessening of competition;

(6) Such other information, if any, believed to be pertinent by the petitioner; and

(7) Such other information as the Secretary may require.

§ 430.53 Processing of applications.

(a) The applicant shall serve a copy of the application, all supporting documents and all subsequent submissions, or a copy from which confidential information has been deleted pursuant to 10 CFR 1004.11, to the Secretary, which may be made available for public review.

(b) Within fifteen (15) days of the receipt of an application, the Secretary will either accept it for filing or reject it, and the applicant will be so notified in writing. Only such applications which conform to the requirements of this subpart and which contain sufficient information for the purposes of a substantive decision will be accepted for filing. Applications which do not so conform will be rejected and an explanation provided to the applicant in writing.

(c) For the purpose of this subpart, an application is deemed to be filed on the date it is accepted for filing.

(d) Promptly after receipt of an application and its acceptance for filing, notice of such application shall be published in the FEDERAL REGISTER. The notice shall set forth the availability for public review of data and information available, and shall solicit comments, data and information with respect to the determination on the application. Except as may otherwise be specified, the period for public comment shall be 60 days after the notice appears in the FEDERAL REGISTER.

(e) The Secretary on his own initiative may convene a hearing if, in his discretion, he considers such hearing will advance his evaluation of the application.

§ 430.54 Referral to the Attorney General.

Notice of the application for exemption under this subpart shall be transmitted to the Attorney General by the Secretary and shall contain (a) a statement of the facts and of the reasons for the exemption, and (b) copies of all documents submitted.

§ 430.55 Evaluation of application.

The Secretary shall grant an application for exemption submitted under this subpart if the Secretary finds, after obtaining the written views of the Attorney General, that a failure to allow an exemption would likely result in a lessening of competition.

§ 430.56 Decision and order.

(a) Upon consideration of the application and other relevant information received or obtained, the Secretary shall issue an order granting or denying the application.

(b) The order shall include a written statement setting forth the relevant facts and the legal basis of the order.

(c) The Secretary shall serve a copy of the order upon the applicant and

upon any other person readily identifiable by the Secretary as one who is interested in or aggrieved by such order. The Secretary also shall publish in the FEDERAL REGISTER a notice of the grant or denial of the order and the reason therefor.

§ 430.57 Duration of temporary exemption.

A temporary exemption terminates according to its terms but not later than twenty-four months after the affective date of the rule for which the exemption is allowed.

Subpart F—Certification and Enforcement

SOURCE: 54 FR 6081, Feb. 7, 1989, unless otherwise noted.

§ 430.60 Purpose and scope.

This subpart sets forth the procedures to be followed for certification and enforcement testing to determine whether a basic model of a covered product complies with the applicable energy conservation standard or water conservation standard (in the case of faucets, showerheads, water closets, and urinals) set forth in subpart C of this part. Energy conservation standards and water conservation standards (in the case of faucets, showerheads, water closets, and urinals) include minimum levels of efficiency and maximum levels of consumption (also referred to as performance standards), and prescriptive energy design requirements (also referred to as design standards).

[63 FR 13319, Mar. 18, 1998]

§ 430.61 Prohibited acts.

(a) Each of the following is a prohibited act pursuant to section 332 of the Act:

(1) Failure to permit access to, or copying of records required to be supplied under the Act and this rule or failure to make reports or provide other information required to be supplied under this Act and this rule;

(2) Failure of a manufacturer to supply at his expense a reasonable number of covered products to a test laboratory designated by the Secretary;

(3) Failure of a manufacturer to permit a representative designated by the Secretary to observe any testing required by the Act and this rule and inspect the results of such testing; and

(4) Distribution in commerce by a manufacturer or private labeler of any new covered product which is not in compliance with an applicable energy efficiency standard or water conservation standard (in the case of faucets, showerheads, water closets, and urinals) prescribed under the Act and this rule.

(b) In accordance with section 333 of the Act, any person who knowingly violates any provision of paragraph (a) of this section may be subject to assessment of a civil penalty of no more than $110 for each violation. Each violation of paragraph (a) of this section shall constitute a separate violation with respect to each covered product, and each day of noncompliance with paragraphs (a) (1) through (3) of this section shall constitute a separate violation.

[54 FR 6081, Feb. 7, 1989, as amended at 62 FR 46183, Sept. 2, 1997; 63 FR 13319, Mar. 18, 1998]

§ 430.62 Submission of data.

(a) *Certification*. (1) Except as provided in paragraph (a)(2) of this section, each manufacturer or private labeler before distributing in commerce any basic model of a covered product subject to the applicable energy conservation standard or water conservation standard (in the case of faucets, showerheads, water closets, and urinals) set forth in subpart C of this part shall certify by means of a compliance statement and a certification report that each basic model(s) meets the applicable energy conservation standard or water conservation standard (in the case of faucets, showerheads, water closets, and urinals) as prescribed in section 325 of the Act. The compliance statement, signed by the company official submitting the statement, and the certification report(s) shall be sent by certified mail to: Department of Energy, Office of Energy Efficiency and Renewable Energy, Office of Codes and Standards, Forrestal Building, 1000 Independence Avenue, SW, Washington, DC 20585–0121.

(2) Each manufacturer or private labeler of a basic model of a covered clothes washer, clothes dryer, dishwasher, faucet, showerhead, water closet, or urinal shall file a compliance statement and a certification report to DOE before [date 1 year after publication of the Final Rule].

(3) The compliance statement shall include all information specified in the format set forth in appendix A of this subpart and shall certify that:

(i) The basic model(s) complies with the applicable energy conservation standard or water conservation standard (in the case of faucets, showerheads, water closets, and urinals);

(ii) All required testing has been conducted in conformance with the applicable test requirements prescribed in subpart B of this part;

(iii) All information reported in the certification report(s) is true, accurate, and complete; and

(iv) The manufacturer or private labeler is aware of the penalties associated with violations of the Act, the regulations thereunder, and 18 U.S.C. 1001 which prohibits knowingly making false statements to the Federal Government.

(4) A certification report for all basic models of a covered product (a suggested format is set forth in appendix A of this subpart) shall be submitted to DOE. The certification report shall include for each basic model the product type, product class (as denoted in § 430.32), manufacturer's name, private labeler's name(s) (if applicable), the manufacturer's model number(s), and for:

(i) Central air conditioners, the seasonal energy efficiency ratio.

(ii) Central air conditioning heat pumps, the seasonal energy efficiency ratio and heating seasonal performance factor.

(iii) Clothes washers, the energy factor in ft^3/kWh/cycle and capacity in ft^3.

(iv) Clothes dryers, the energy factor in lbs/kWh, capacity in ft^3, and voltage.

(v) Direct heating equipment, the annual fuel utilization efficiency in percent and capacity in Btu/hour.

(vi) Dishwashers, the energy factor expressed in cycles per kilowatt-hour.

(vii) Faucets, the maximum water use in gpm (L/min) or gal/cycle (L/cycle) for each faucet; or the maximum water use in gpm (L/min) or gal/cycle (L/cycle) for each flow control mechanism, with a listing of accompanied faucets by manufacturer's model numbers.

(viii) Furnaces, the annual fuel utilization efficiency in percent.

(ix) General service fluorescent lamps, the testing laboratory's National Voluntary Laboratory Accreditation Program (NVLAP) identification number or other NVLAP-approved accreditation identification, production date codes (and accompanying decoding scheme), the 12-month average lamp efficacy in lumens per watt, lamp wattage, and the 12-month average Color Rendering Index.

(x) Incandescent reflector lamps, the laboratory's National Voluntary Accreditation Program (NVLAP) identification number or other NVLAP-approved accreditation identification, production date codes (and accompanying decoding scheme), the 12-month average lamp efficacy in lumens per watt, and lamp wattage.

(xi) Pool heaters, the thermal efficiency in percent.

(xii) Refrigerators, refrigerator-freezers, and freezers, the annual energy use in kWh/yr and total adjusted volume in ft^3.

(xiii) Room air conditioners, the energy efficiency ratio and capacity in Btu/hour.

(xiv) Showerheads, the maximum water use in gpm (L/min) with a listing of accompanied showerheads by manufacturer's model numbers.

(xv) Urinals, the maximum water use in gpf (Lpf).

(xvi) Water closets, the maximum water use in gpf (Lpf).

(xvii) Water heaters, the energy factor and rated storage volume in gallons.

(5) Copies of reports to the Federal Trade Commission which include the information specified in paragraph (a)(4) could serve in lieu of the certification report.

(b) *Model Modifications.* (1) Any change to a basic model which affects energy consumption or water consumption (in the case of faucets,

showerheads, water closets, and urinals) constitutes the addition of a new basic model. If such change reduces consumption, the new model shall be considered in compliance with the standard without any additional testing. If, however, such change increases consumption while still meeting the standard, all information required by paragraph (a)(4) of this section for the new basic model must be submitted, by certified mail, to: Department of Energy, Office of Energy Efficiency and Renewable Energy, Office of Codes and Standards, Forrestal Building, 1000 Independence Avenue, SW, Washington, DC 20585–0121.

(2) Prior to or concurrent with the distribution of a new model of general service fluorescent lamp or incandescent reflector lamp, each manufacturer and private labeler shall submit a statement signed by a company official stating how the manufacturer or private labeler determined that the lamp meets or exceeds the energy conservation standards, including a description of any testing or analysis the manufacturer or private labeler performed. This statement shall also list the model number or descriptor, lamp wattage and date of commencement of manufacture. Manufacturers and private labelers of general service fluorescent lamps and incandescent reflector lamps shall submit the certification report required by paragraph (a)(4) of this section within one year after the date manufacture of that new model commences.

(c) *Discontinued model.* When production of a basic model has ceased and it is no longer being distributed, this shall be reported, by certified mail, to: Department of Energy, Office of Energy Efficiency and Renewable Energy, Office of Codes and Standards, Forrestal Building, 1000 Independence Avenue, SW, Washington, DC 20585–0121. For each basic model, the report shall include: product type, product class, the manufacturer's name, the private labeler name(s), if applicable, and the manufacturer's model number. If the reporting of discontinued models coincides with the submittal of a certification report, such information can be included in the certification report.

(d) *Maintenance of records.* The manufacturer or private labeler of any covered product subject to any of the energy performance standards, water performance standards (in the case of faucets, showerheads, water closets, and urinals), or procedures prescribed in this part shall establish, maintain, and retain the records of the underlying test data for all certification testing. Such records shall be organized and indexed in a fashion which makes them readily accessible for review by DOE upon request. The records shall include the supporting test data associated with tests performed on any test units to satisfy the requirements of this subpart. The records shall be retained by the manufacturer (private labeler) for a period of two years from the date that production of the applicable model has ceased.

(e) *Third party representation.* A manufacturer or private labeler may elect to use a third party to submit the certification report to DOE (for example a trade association or other authorized representative). Such certification reports shall include all the information specified in paragraph (a)(4) of this section. Third parties submitting certification reports shall include the names of the manufacturers or private labelers who authorized the submittal of the certification reports to DOE on their behalf. The third party representative also may submit discontinued model information on behalf of an authorizing manufacturer.

[63 FR 13319, Mar. 18, 1998, as amended at 68 FR 51903, Aug. 29, 2003]

§ 430.63 Sampling.

(a) For purposes of a certification of compliance, the determination that a basic model complies with the applicable energy performance standard or water performance standard (in the case of faucets, showerheads, water closets, and urinals) shall be based upon the sampling procedures set forth in § 430.24 of this part. For purposes of a certification of compliance, the determination that a basic model complies with the applicable design standard shall be based upon the incorporation of specific design requirements for clothes dryers, dishwashers, clothes

washers and kitchen ranges and ovens specified in section 325 of the Act.

(b) A basic model which meets the following requirements may qualify as an ''other than tested model'' for purposes of the certification testing and sampling requirements:

(1) Central air conditioners: The condenser-evaporator coil combinations manufactured by the condensing unit manufacturer other than the combination likely to have the largest volume of retail sales or the condenser-coil combinations manufactured in part by a component manufacturer using the same condensing unit.

(2) For purposes of certification of ''other than tested models,'' as defined in paragraph (b)(1) of this section, a manufacturer may certify the basic model on the basis of computer simulation or engineering analysis as set forth in § 430.23(m) of this part.

[54 FR 6081, Feb. 7, 1989, as amended at 63 FR 13321, Mar. 18, 1998]

§ 430.64 Imported products.

(a) Pursuant to section 331 of the Act, any person importing any covered product into the United States shall comply with the provisions of the Act and of this part, and is subject to the remedies of this part.

(b) Any covered product offered for importation in violation of the Act and of this part shall be refused admission into the customs territory of the United States under rules issued by the Secretary of the Treasury, except that the Secretary of the Treasury may, by such rules, authorize the importation of such covered product upon such terms and conditions (including the furnishing of a bond) as may appear to the Secretary of Treasury appropriate to ensure that such covered product will not violate the Act and this part, or will be exported or abandoned to the United States.

§ 430.65 Exported products.

Pursuant to section 330 of the Act, this part shall not apply to any covered product if (a) such covered product is manufactured, sold, or held for sale for export from the United States (or such product was imported for export), unless such product is, in fact, distributed in commerce for use in the United States, and (b) such covered product, when distributed in commerce, or any container in which it is enclosed when so distributed, bears a stamp or label stating that such covered product is intended for export.

§ 430.70 Enforcement.

(a) *Performance standard*—(1) *Test notice*. Upon receiving information in writing concerning the energy performance or water performance (in the case of faucets, showerheads, water closets, and urinals) of a particular covered product of a particular manufacturer or private labeler which indicates that the covered product may not be in compliance with the applicable energy performance standard or water performance standard (in the case of faucets, showerheads, water closets, and urinals), the Secretary may conduct testing of that covered product under this subpart by means of a test notice addressed to the manufacturer in accordance with the following requirements:

(i) Such a procedure will only be followed after the Secretary or his designated representative has examined the underlying test data provided by the manufacturer and after the manufacturer has been offered the opportunity to meet with DOE to verify compliance with the applicable performance standard. A representative designated by the Secretary shall be permitted to observe any reverification procedures by this subpart, and to inspect the results of such reverification.

(ii) The test notice will be signed by the Secretary or his designee. The test notice will be mailed or delivered by DOE to the plant manager or other responsible official, as designated by the manufacturer.

(iii) The test notice will specify the model or basic model to be selected for testing, the method of selecting the test sample, the time at which testing shall be initiated, the date by which testing is scheduled to be completed and the facility at which testing will be conducted. The test notice may also provide for situations in which the selected basic model is unavailable for testing, and may include alternative basic models.

(iv) The Secretary may require in the test notice that the manufacturer of a covered product shall ship at his expense a reasonable number of units of a basic model specified in such test notice to a testing laboratory designated by the Secretary. The number of units of a basic model specified in a test notice shall not exceed twenty (20).

(v) Within 5 working days of the time units are selected, the manufacturer shall ship the specified test units of a basic model to the testing laboratory.

(2) *Testing Laboratory*. Whenever DOE conducts enforcement testing at a designated laboratory in accordance with a test notice under this section, the resulting test data shall constitute official test data for that basic model. Such test data will be used by DOE to make a determination of compliance or noncompliance if a sufficient number of tests have been conducted to satisfy the requirements of appendix B of this subpart.

(3) *Sampling*. The determination that a manufacturer's basic model complies with the applicable energy performance standard or water performance standard (in the case of faucets, showerheads, water closets, and urinals) shall be based on the testing conducted in accordance with the statistical sampling procedures set forth in appendix B of this subpart and the test procedures set forth in subpart B of this part.

(4) *Test unit selection*. A DOE inspector shall select a batch, a batch sample, and test units from the batch sample in accordance with the provisions of this paragraph and the conditions specified in the test notice.

(i) The batch may be subdivided by DOE utilizing criteria specified in the test notice, e.g., date of manufacture, component-supplier, location of manufacturing facility, or other criteria which may differentiate one unit from another within a basic model.

(ii) A batch sample of up to 20 units will then be randomly selected from one or more subdivided groups within the batch. The manufacturer shall keep on hand all units in the batch sample until such time as the basic model is determined to be in compliance or noncompliance.

(iii) Individual test units comprising the test sample shall be randomly selected from the batch sample.

(iv) All random selection shall be achieved by sequentially numbering all of the units in a batch sample and then using a table of random numbers to select the units to be tested.

(5) *Test unit preparation*. (i) Prior to and during testing, a test unit selected in accordance with paragraph (a)(4) of this section shall not be prepared, modified, or adjusted in any manner unless such preparation, modification, or adjustment is allowed by the applicable DOE test procedure. One test shall be conducted for each test unit in accordance with the applicable test procedures prescribed in subpart B.

(ii) No quality control, testing or assembly procedures shall be performed on a test unit, or any parts and subassemblies thereof, that is not performed during the production and assembly of all other units included in the basic model.

(iii) A test unit shall be considered defective if such unit is inoperative or is found to be in noncompliance due to failure of the unit to operate according to the manufacturer's design and operating instructions. Defective units, including those damaged due to shipping or handling, shall be reported immediately to DOE. DOE shall authorize testing of an additional unit on a case-by-case basis.

(6) *Testing at manufacturer's option*. (i) If a manufacturer's basic model is determined to be in noncompliance with the applicable energy performance standard or water performance standard (in the case of faucets, showerheads, water closets, and urinals) at the conclusion of DOE testing in accordance with the double sampling plan specified in appendix B of this subpart, the manufacturer may request that DOE conduct additional testing of the model according to procedures set forth in appendix B of this subpart.

(ii) All units tested under paragraph (a)(6) of this section shall be selected and tested in accordance with the provisions given in paragraphs (a) (1) through (5) of this section.

(iii) The manufacturer shall bear the cost of all testing conducted under paragraph (a)(6) of this section.

(iv) The manufacturer shall cease distribution of the basic model being tested under the provisions of paragraph (a)(6) of this section from the time the manufacturer elects to exercise the option provided in this paragraph until the basic model is determined to be in compliance. DOE may seek civil penalties for all units distributed during such period.

(v) If the additional testing results in a determination of compliance, a notice of allowance to resume distribution shall be issued by the Department.

(b) *Design standard*. In the case of a design standard, a model is determined noncompliant by DOE after the Secretary or his designated representative has examined the underlying design information provided by the manufacturer and after the manufacturer has been offered the opportunity to verify compliance with the applicable design standard.

[54 FR 6080, Feb. 7, 1989, as amended at 63 FR 13321, Mar. 18, 1998]

§ 430.71 Cessation of distribution of a basic model.

(a) In the event that a model is determined noncompliant by DOE in accordance with § 430.70 of this part or if a manufacturer or private labeler determines a model to be in noncompliance, then the manufacturer or private labeler shall:

(1) Immediately cease distribution in commerce of the basic model;

(2) Give immediate written notification of the determination of noncompliance, to all persons to whom the manufacturer has distributed units of the basic model manufactured since the date of the last determination of compliance.

(3) Pursuant to a request made by the Secretary, provide DOE within 30 days of the request, records, reports and other documentation pertaining to the acquisition, ordering, storage, shipment, or sale of a basic model determined to be in noncompliance.

(4) The manufacturer may modify the noncompliant basic model in such manner as to make it comply with the applicable performance standard. Such modified basic model shall then be treated as a new basic model and must be certified in accordance with the provisions of this subpart; except that in addition satisfying all requirements of this subpart, the manufacturer shall also maintain records that demonstrate that modifications have been made to all units of the new basic model prior to distribution in commerce.

(b) If a basic model is not properly certified in accordance with the requirements of this subpart, the Secretary may seek, among other remedies, injunctive action to prohibit distribution in commerce of such basic model.

§ 430.72 Subpoena.

Pursuant to section 329(a) of the Act, for purposes of carrying out this part, the Secretary or the Secretary's designee, may sign and issue subpoenas for the attendance and testimony of witnesses and the production of relevant books, records, papers, and other documents, and administer the oaths. Witnesses summoned under the provisions of this section shall be paid the same fees and mileage as are paid to witnesses in the courts of the United States. In case of contumacy by, or refusal to obey a subpoena served, upon any persons subject to this part, the Secretary may seek an order from the District Court of the United States for any District in which such person is found or resides or transacts business requiring such person to appear and give testimony, or to appear and produce documents. Failure to obey such order is punishable by such court as a contempt thereof.

§ 430.73 Remedies.

If DOE determines that a basic model of a covered product does not comply with an applicable energy conservation standard or water conservation standard (in the case of faucets, showerheads, water closets, and urinals):

(a) DOE will notify the manufacturer, private labeler or any other person as required, of this finding and of the Secretary's intent to seek a judicial order restraining further distribution in commerce of such basic model unless the manufacturer, private labeler or any other person as required, delivers to DOE within 15 calendar days a

statement, satisfactory to DOE, of the steps he will take to insure that the noncompliant model will no longer be distributed in commerce. DOE will monitor the implementation of such statement.

(b) If the manufacturer, private labeler or any other person as required, fails to stop distribution of the noncompliant model, the Secretary may seek to restrain such violation in accordance with section 334 of the Act.

(c) The Secretary shall determine whether the facts of the case warrant the assessment of civil penalties for knowing violations in accordance with section 333 of the Act.

[54 FR 6081, Feb. 7, 1989, as amended at 63 FR 13321, Mar. 18, 1998]

§ 430.74 Hearings and appeals.

(a) Pursuant to section 333(d) of the Act, before issuing an order assessing a civil penalty against any person under this section, the Secretary shall provide to such person notice of the proposed penalty. Such notice shall inform such person of that person's opportunity to elect in writing within 30 days after the date of receipt of such notice to have the procedures of paragraph (c) of this section (in lieu of those in paragraph (b) of this section) apply with respect to such assessment.

(b)(1) Unless an election is made within 30 calendar days after receipt of notice under paragraph (a) of this section to have paragraph (c) of this section apply with respect to such penalty, the Secretary shall assess the penalty, by order, after a determination of violation has been made on the record after an opportunity for an agency hearing pursuant to section 554 of title 5, United States Code, before an administrative law judge appointed under section 3105 of such title 5. Such assessment order shall include the administrative law judge's findings and the basis for such assessment.

(2) Any person against whom a penalty is assessed under this section may, within 60 calendar days after the date of the order of the Secretary assessing such penalty, institute an action in the United States Court of Appeals for the appropriate judicial circuit for judicial review of such order in accordance with chapter 7 of title 5, United States Code. The court shall have jurisdiction to enter a judgment affirming, modifying, or setting aside in whole or in part, the order of the Secretary, or the court may remand the proceeding to the Secretary for such further action as the court may direct.

(c)(1) In the case of any civil penalty with respect to which the procedures of this section have been elected, the Secretary shall promptly assess such penalty, by order, after the date of the receipt of the notice under paragraph (a) of this section of the proposed penalty.

(2) If the civil penalty has not been paid within 60 calendar days after the assessment has been made under paragraph (c)(1) of this section, the Secretary shall institute an action in the appropriate District Court of the United States for an order affirming the assessment of the civil penalty. The court shall have authority to review de novo the law and the facts involved and shall have jurisdiction to enter a judgment enforcing, modifying, and enforcing as so modified, or setting aside in whole or in part, such assessment.

(3) Any election to have this paragraph apply may not be revoked except with the consent of the Secretary.

(d) If any person fails to pay an assessment of a civil penalty after it has become a final and unappealable order under paragraph (b) of this section, or after the appropriate District Court has entered final judgment in favor of the Secretary under paragraph (c) of this section, the Secretary shall institute an action to recover the amount of such penalty in any appropriate District Court of the United States. In such action, the validity and appropriateness of such final assessment order or judgment shall not be subject to review.

(e)(1) In accordance with the provisions of section 333(d)(5)(A) of the Act and notwithstanding the provisions of title 28, United States Code, or section 502(c) of the Department of Energy Organization Act, the Secretary shall be represented by the General Counsel of the Department of Energy (or any attorney or attorneys within DOE designated by the Secretary) who shall supervise, conduct, and argue any civil litigation to which paragraph (c) of

this section applies including any related collection action under paragraph (d) of this section in a court of the United States or in any other court, except the Supreme Court of the United States. However, the Secretary or the General Counsel shall consult with the Attorney General concerning such litigation and the Attorney General shall provide, on request, such assistance in the conduct of such litigation as may be appropriate.

(2) In accordance with the provisions of section 333(d)(5)(B) of the Act, and subject to the provisions of section 502(c) of the Department of Energy Organization Act, the Secretary shall be represented by the Attorney General, or the Solicitor General, as appropriate, in actions under this section, except to the extent provided in paragraph (e)(1) of this section.

(3) In accordance with the provisions of section 333(d)(5)(C) of the Act, section 402(d) of the Department of Energy Organization Act shall not apply with respect to the function of the Secretary under this section.

§ 430.75 Confidentiality.

Pursuant to the provisions of 10 CFR 1004.11, any person submitting information or data which the person believes to be confidential and exempt law from public disclosure should submit one complete copy, and fifteen copies from which the information believed to be confidential has been deleted. In accordance with the procedures established at 10 CFR 1004.11, DOE shall make its own determination with regard to any claim that information submitted be exempt from public disclosure.

OMB Control No. 1910–1400

APPENDIX A TO SUBPART F OF PART 430—COMPLIANCE STATEMENT AND CERTIFICATION REPORT

COMPLIANCE STATEMENT

Product: _____

Manufacturer's or Private Labeler's Name and Address:

_____

_____

_____

This compliance statement and all certification reports submitted are in accordance with 10 CFR Part 430 (Energy or Water Conservation Program for Consumer Products) and the Energy Policy and Conservation Act, as amended. The compliance statement is signed by a responsible official of the above named company. The basic model(s) listed in certification reports comply with the applicable energy conservation standard or water (in the case of faucets, showerheads, water closets, and urinals) conservation standard. All testing on which the certification reports are based was conducted in conformance with applicable test requirements prescribed in 10 CFR part 430 subpart B. All information reported in the certification report(s) is true, accurate, and complete. The company is aware of the penalties associated with violations of the Act, the regulations thereunder, and is also aware of the provisions contained in 18 U.S.C. 1001, which prohibits knowingly making false statements to the Federal Government.

Name of Company Official: _____

Signature: _____

Title: _____

Firm or Organization: _____

Address: _____

Telephone Number: _____

Facsimile Number: _____

Date: _____

Third Party Representation (if applicable)

For certification reports prepared and submitted by a third party organization under the provisions of § 430.62 of 10 CFR part 430, the company official who authorized said third party representation is:

Name: _____

Title: _____

Address: _____

Telephone Number: _____

Facsimile Number: _____

The third party organization submitting the certification report on behalf of the company is:

Third Party Organization: _____

Address: _____

Telephone Number: _____

Facsimile Number: _____

CERTIFICATION REPORT

Date: _____

Product Type: _____

Product Class: _____

Manufacturer: _____

Private Labeler (if applicable): _____

Name: _____

Title: _____

Address: _____

Telephone Number: _____

Facsimile Number: _____

For Existing, New, or Modified Models[1]:
For Discontinued Models[2]:

[63 FR 13321, Mar. 18, 1998]

APPENDIX B TO SUBPART F OF PART 430—SAMPLING PLAN FOR ENFORCEMENT TESTING

Double Sampling

Step 1. The first sample size (N_1) must be four or more units.

Step 2. Compute the mean ($\bar{x}_1$) of the measured energy performance or water performance (in the case of faucets, showerheads, water closets, and urinals) of the N_1 units in the first sample as follows:

$$\bar{x}_1 = \frac{1}{n_1}\left(\sum_{i=1}^{n_1} x_i\right) \qquad (1)$$

where ($\bar{x}_1$) is the measured energy efficiency, energy or water (in the case of faucets, showerheads, water closets, and urinals) consumption of unit I.

Step 3. Compute the standard deviation (s_1) of the measured energy or water performance of the (N_1) units in the first sample as follows:

$$s_1 = \sqrt{\frac{\sum_{i=1}^{n_1} \left(x_i - \bar{x}_1\right)^2}{n_1 - 1}} \qquad (2)$$

Step 4. Compute the standard error ($S_{\bar{x}_1}$) of the measured energy or water performance of the N_1 units in the first sample as follows:

$$s_{\bar{x}_1} = \frac{s_1}{\sqrt{n_1}} \qquad (3)$$

Step 5. Compute the upper control limit (UCL_1) and lower control limit (LCL_1) for the mean of the first sample using the applicable DOE energy or water performance standard (EPS) as the desired mean and a probability level of 95 percent (two-tailed test) as follows:

$$LCL_1 = EPS - ts_{\bar{x}_1} \qquad (4)$$

$$UCL_1 = EPS + ts_{\bar{x}_1} \qquad (5)$$

where t is a statistic based on a 95 percent two-tailed probability level and a sample size of N_1.

Step 6(a). For an Energy Efficiency Standard, compare the mean of the first sample ($\bar{x}_1$) with the upper and lower control limits (UCL_1 and LCL_1) to determine one of the following:

(1) If the mean of the first sample is below the lower control limit, then the basic model is in noncompliance and testing is at an end. (Do not go on to any of the steps below.)

(2) If the mean of the first sample is equal to or greater than the upper control limit, then the basic model is in compliance and testing is at an end. (Do not go on to any of the steps below.)

(3) If the sample mean is equal to or greater than the lower control limit but less than the upper control limit, then no determination of compliance or noncompliance can be made and a second sample size is determined by Step 7(a).

Step 6(b). For an Energy or Water Consumption Standard, compare the mean of the first sample ($\bar{x}_1$) with the upper and lower control limits (UCL_1 and LCL_1) to determine one of the following:

(1) If the mean of the first sample is above the upper control limit, then the basic model is in noncompliance and testing is at an end. (Do not go on to any of the steps below.)

(2) If the mean of the first sample is equal to or less than the lower control limit, then the basic model is in compliance and testing is at an end. (Do not go on to any of the steps below.)

(3) If the sample mean is equal to or less than the upper control limit but greater than the lower control limit, then no determination of compliance or noncompliance can be made and a second sample size is determined by Step 7(b).

Step 7(a). For an Energy Efficiency Standard, determine the second sample size (N_2) as follows:

$$n_2 = \left(\frac{ts_1}{0.05\ EPS}\right)^2 - n_1 \qquad (6a)$$

where S_1 and T have the values used in Steps 4 and 5, respectively. The term ''0.05 EPS'' is the difference between the applicable energy efficiency standard and 95 percent of the standard, where 95 percent of the standard is taken as the lower control limit. This procedure yields a sufficient combined sample size (N_1+N_2) to give an estimated 97.5 percent probability of obtaining a determination of compliance when the true mean efficiency is equal to the applicable standard. Given the solution value of N_2, determine one of the following:

(1) If the value of N_2 is less than or equal to zero and if the mean energy efficiency of the first sample ($\bar{x}_1$) is either equal to or greater

[1] Provide specific product information including, for each basic model, the manufacturer's model numbers and the information required in §430.62(a)(4)(i) through (a)(4)(xvii)).

[2] Provide manufacturer's model number.

than the lower control limit (LCL_1) or equal to or greater than 95 percent of the applicable energy efficiency standard (EES), whichever is greater, i.e., if $N_2 \leq 0$ and $\bar{X}_1 \geq$ max (LCL_1, 0.95 EES), the basic model is in compliance and testing is at an end.

(2) If the value of N_2 is less than or equal to zero and the mean energy efficiency of the first sample ($\bar{X}_1$) is less than the lower control limit (LCL_1) or less than 95 percent of the applicable energy efficiency standard (EES), whichever is greater, i.e., if $N_2 \leq 0$ and $\bar{X}_1 \geq$ max (LCL_1, 0.95 EES), the basic model is in noncompliance and testing is at an end.

(3) If the value of N_2 is greater than zero, then value of the second sample size is determined to be the smallest integer equal to or greater than the solution value of N_2 for equation (6a). If the value of N_2 so calculated is greater than $20-N_1$, set N_2 equal to $20-N_1$.

Step 7(b). For an Energy or Water Consumption Standard, determine the second sample size (N_2) as follows:

$$n_2 = \left(\frac{ts_1}{0.05\ EPS}\right)^2 - n_1 \qquad (6b)$$

where s_1 and t have the values used in Steps 4 and 5, respectively. The term ''0.05 EPS'' is the difference between the applicable energy or water consumption standard and 105 percent of the standard, where 105 percent of the standard is taken as the upper control limit. This procedure yields a sufficient combined sample size (N_1+N_2) to give an estimated 97.5 percent probability of obtaining a determination of compliance when the true mean consumption is equal to the applicable standard. Given the solution value of N_2, determine one of the following:

(1) If the value of N_2 is less than or equal to zero and if the mean energy or water consumption of the first sample ($\bar{X}_1$) is either equal to or less than the upper control limit (UCL_1) or equal to or less than 105 percent of the applicable energy or water performance standard (EPS), whichever is less, i.e., if $N_2 \leq 0$ and $\bar{X}_1 \leq$ min (UCL_1, 1.05 EPS), the basic model is in compliance and testing is at an end.

(2) If the value of N_2 is less than or equal to zero and the mean energy or water consumption of the first sample ($\bar{X}_1$) is greater than the upper control limit (UCL_1) or more than 105 percent of the applicable energy or water performance standard (EPS), whichever is less, i.e., if $N_2 \leq 0$ and $\bar{X}_1 >$ min (UCL_1, 1.05 EPS), the basic model is in noncompliance and testing is at an end.

(3) If the value of N_2 is greater than zero, then the value of the second sample size is determined to be the smallest integer equal to or greater than the solution value of N_2 for equation (6b). If the value of N_2 so calculated is greater than $20-N_1$, set N_2 equal to $20-N_1$.

Step 8. Compute the combined mean ($\bar{X}_2$) of the measured energy or water performance of the N_1 and N_2 units of the combined first and second samples as follows:

$$\bar{x}_2 = \frac{1}{n_1+n_2}\left(\sum_{i=1}^{n_1+n_2} x_i\right) \qquad (7)$$

Step 9. Compute the standard error (S_{x1}) of the measured energy or water performance of the N_1 and N_2 units in the combined first and second samples as follows:

$$s_{\bar{x}_2} = \frac{s_1}{\sqrt{n_1+n_2}} \qquad (8)$$

NOTE: s_1 is the value obtained in Step 3.

Step 10(a). For an Energy Efficiency Standard, compute the lower control limit (LCL_2) for the mean of the combined first and second samples using the DOE energy efficiency standard (EES) as the desired mean and a one-tailed probability level of 97.5 percent (equivalent to the two-tailed probability level of 95 percent used in Step 5) as follows:

$$LCL_2 = EES - ts_{\bar{x}_2} \qquad (9a)$$

where the t-statistic has the value obtained in Step 5.

Step 10(b). For an Energy or Water Consumption Standard, compute the upper control limit (UCL_2) for the mean of the combined first and second samples using the DOE energy or water performance standard (EPS) as the desired mean and a one-tailed probability level of 102.5 percent (equivalent to the two-tailed probability level of 95 percent used in Step 5) as follows:

$$UCL_2 = EPS + ts_{\bar{x}_2} \qquad (9b)$$

where the t-statistic has the value obtained in Step 5.

Step 11(a). For an Energy Efficiency Standard, compare the combined sample mean ($\bar{X}_2$) to the lower control limit (LCL_2) to find one of the following:

(1) If the mean of the combined sample ($\bar{X}_2$) is less than the lower control limit (LCL_2) or 95 percent of the applicable energy efficiency standard (EES), whichever is greater, i.e., if $\bar{X}_2 <$ max (LCL_2, 0.95 EES), the basic model is in noncompliance and testing is at an end.

(2) If the mean of the combined sample ($\bar{X}_2$) is equal to or greater than the lower control limit (LCL_2) or 95 percent of the applicable energy efficiency standard (EES), whichever is greater, i.e., if $\bar{X}_2 \geq$ max (LCL_2, 0.95 EES), the basic model is in compliance and testing is at an end.

Step 11(b). For an Energy or Water Consumption Standard, compare the combined sample mean ($\bar{X}_2$) to the upper control limit (UCL_2) to find one of the following:

(1) If the mean of the combined sample ($\bar{X}_2$) is greater than the upper control limit (UCL_2) or 105 percent of the applicable energy or water performance standard (EPS), whichever is less, i.e., if $\bar{X}_2 > \min(UCL_2, 1.05\ EPS)$, the basic model is in noncompliance and testing is at an end.

(2) If the mean of the combined sample ($\bar{X}_2$) is equal to or less than the upper control limit (UCL_2) or 105 percent of the applicable energy or water performance standard (EPS), whichever is less, i.e., if $\bar{X}_2 \leq \min(UCL_2, 1.05\ EPS)$, the basic model is in compliance and testing is at an end.

Manufacturer-Option Testing

If a determination of non-compliance is made in Steps 6, 7 or 11, the manufacturer may request that additional testing be conducted, in accordance with the following procedures.

Step A. The manufacturer requests that an additional number, N_3, of units be tested, with N_3 chosen such that $N_1+N_2+N_3$ does not exceed 20.

Step B. Compute the mean energy or water performance, standard error, and lower or upper control limit of the new combined sample in accordance with the procedures prescribed in Steps 8, 9, and 10, above.

Step C. Compare the mean performance of the new combined sample to the revised lower or upper control limit to determine one of the following:

a.1. For an Energy Efficiency Standard, if the new combined sample mean is equal to or greater than the lower control limit or 95 percent of the applicable energy efficiency standard, whichever is greater, the basic model is in compliance and testing is at an end.

a.2. For an Energy or Water Consumption Standard, if the new combined sample mean is equal to or less than the upper control limit or 105 percent of the applicable energy or water consumption standard, whichever is less, the basic model is in compliance and testing is at an end.

b.1. For an Energy Efficiency Standard, if the new combined sample mean is less than the lower control limit or 95 percent of the applicable energy efficiency standard, whichever, is greater, and the value of $N_1+N_2+N_3$ is less than 20, the manufacturer may request that additional units be tested. The total of all units tested may not exceed 20. Steps A, B, and C are then repeated.

b.2. For an Energy or Water Consumption Standard, if the new combined sample mean is greater than the upper control limit or 105 percent of the applicable energy or water consumption standard, whichever is less, and the value of $N_1+N_2+N_3$ is less than 20, the manufacturer may request that additional units be tested. The total of all units tested may not exceed 20. Steps A, B, and C are then repeated.

c. Otherwise, the basic model is determined to be in noncompliance.

[63 FR 13321, Mar. 18, 1998]

PART 431—ENERGY EFFICIENCY PROGRAM FOR CERTAIN COMMERCIAL AND INDUSTRIAL EQUIPMENT

Subpart A—General Provisions

Sec.
431.1 Purpose and scope.
431.2 Definitions.

Subpart B—Electric Motors

431.11 Purpose and scope.
431.12 Definitions.

TEST PROCEDURES, MATERIALS INCORPORATED AND METHODS OF DETERMINING EFFICIENCY

431.15 Materials incorporated by reference.
431.16 Test procedures for the measurement of energy efficiency.
431.17 Determination of efficiency.
431.18 Testing laboratories.
431.19 Department of Energy recognition of accreditation bodies.
431.20 Department of Energy recognition of nationally recognized certification programs.
431.21 Procedures for recognition and withdrawal of recognition of accreditation bodies and certification programs.

ENERGY CONSERVATION STANDARDS

431.25 Energy conservation standards and effective dates.
431.26 Preemption of State regulations.

LABELING

431.30 Applicability of labeling requirements.
431.31 Labeling requirements.
431.32 Preemption of State regulations.

CERTIFICATION

431.35 Applicability of certification requirements.
431.36 Compliance Certification.

APPENDIX A TO SUBPART B OF 10 CFR PART 431—POLICY STATEMENT FOR ELECTRIC MOTORS COVERED UNDER THE ENERGY POLICY AND CONSERVATION ACT

APPENDIX B TO SUBPART B OF PART 431—UNIFORM TEST METHOD FOR MEASURING NOMINAL FULL LOAD EFFICIENCY OF ELECTRIC MOTORS

APPENDIX C TO SUBPART B OF PART 431—COMPLIANCE CERTIFICATION