AUTHENTICATED
U.S. GOVERNMENT
INFORMATION
GPO

requirements, unless otherwise exempted from one or more of those requirements by Board order or regulation.

(b) When any intrastate air carrier that in August 1, 1977, was operating primarily in intrastate air transportation regulated by a State receives the authority to provide interstate air transportation, any authority received from such State shall be considered to be part of its authority to provide air transportation received from the Board under Title IV of the Act, until suspended, amended, or terminated as provided under such title.

Subpart K—Policies Relating to Certificate Duration

§ 399.120 Duration of certificates in limited-entry markets.

All certificate authority that the Department grants to U.S. air carriers in carrier selection proceedings will be awarded in the form of experimental certificates of five years' duration pursuant to section 401(d)(8) of the Federal Aviation Act. This provision does not alter or amend permanent certificates issued prior to January 1, 1985.

[Doc. No. 43403, 51 FR 43188, Dec. 1, 1986]

CHAPTER III—COMMERCIAL SPACE TRANSPORTATION, FEDERAL AVIATION ADMINISTRATION, DEPARTMENT OF TRANSPORTATION

(Parts 400 to 1199)

SUBCHAPTER A—GENERAL

Part		*Page*
400	Basis and scope	479
401	Organization and definitions	479

SUBCHAPTER B—PROCEDURE

404	Regulations and licensing requirements	482
405	Investigations and enforcement	483
406	Investigations, enforcement, and administrative review	484

SUBCHAPTER C—LICENSING

411	[Reserved]	
413	License application procedures	506
415	Launch license	509
417–419	[Reserved]	
420	License to operate a launch site	521
421–430	[Reserved]	
431	Launch and reentry of a reusable launch vehicle (RLV)	571
432	[Reserved]	
433	License to operate a reentry site	583
434	[Reserved]	
435	Reentry of a reentry vehicle other than a reusable launch vehicle (RLV)	583

Part		*Page*
436–439	[Reserved]	
440	Financial responsibility	586
441–449	[Reserved]	
450	Financial responsibility	596
451–1199	[Reserved]	

SUBCHAPTER A—GENERAL

PART 400—BASIS AND SCOPE

Sec.
400.1 Basis.
400.2 Scope.

AUTHORITY: 49 U.S.C. 70101–70121.

SOURCE: Docket No. 43810, 53 FR 11013, Apr. 4, 1988, unless otherwise noted.

§ 400.1 Basis.

The basis for the regulations in this chapter is the Commercial Space Launch Act of 1984, and applicable treaties and international agreements to which the United States is party.

§ 400.2 Scope.

These regulations set forth the procedures and requirements applicable to the authorization and supervision under 49 U.S.C. Subtitle IX, chapter 701, of commercial space transportation activities conducted in the United States or by a U.S. citizen. The regulations in this chapter do not apply to amateur rocket activities or to space activities carried out by the United States Government on behalf of the United States Government.

[Doc. No. FAA–4999–5535, 65 FR 56656, Sept. 19, 2000]

PART 401—ORGANIZATION AND DEFINITIONS

Sec.
401.1 The Office of Commercial Space Transportation.
401.3 The Director of Commercial Space Transportation.
401.5 Definitions.

AUTHORITY: 49 U.S.C. 70101–70121.

SOURCE: Docket No. 43810, 53 FR 11013, Apr. 4, 1988, unless otherwise noted.

§ 401.1 The Office of Commercial Space Transportation.

The Office of Commercial Space Transportation, referred to in these regulations as the ''Office,'' is a line of business within the Federal Aviation Administration and is located in the Federal Aviation Administration Headquarters, 800 Independence Avenue, SW., Room 331, Washington, DC 20591.

[Amdt. 401–3, 68 FR 35289, June 13, 2003]

§ 401.3 The Director of Commercial Space Transportation.

The Office is headed by an Associate Administrator appointed by the Secretary of Transportation to exercise the Secretary's authority to license and otherwise regulate commercial space launch activities and to discharge the Secretary's responsibility to encourage, facilitate and promote commercial space launches by the United States private sector.

[53 FR 11013, Apr. 4, 1988, as amended by Amdt. 401–3, 68 FR 35289, June 13, 2003]

§ 401.5 Definitions.

As used in this chapter—

Act means 49 U.S.C. Subtitle IX, Commercial Space Transportation, ch. 701—Commercial Space Launch Activities, 49 U.S.C. 70101–70121.

Amateur rocket activities means launch activities conducted at private sites involving rockets powered by a motor or motors having a total impulse of 200,000 pound-seconds or less and a total burning or operating time of less than 15 seconds, and a rocket having a ballistic coefficient-*i.e.*, gross weight in pounds divided by frontal area of rocket vehicle-less than 12 pounds per square inch.

Associate Administrator means the Associate Administrator for Commercial Space Transportation, Federal Aviation Administration, or any person designated by the Associate Administrator to exercise the authority or discharge the responsibilities of the Associate Administrator.

Contingency abort means cessation of vehicle flight during ascent or descent in a manner that does not jeopardize public health and safety and the safety of property, in accordance with mission rules and procedures. Contingency abort includes landing at an alternative location that has been designated as a contingency abort location in advance of vehicle flight.

Emergency abort means cessation of vehicle flight during ascent or descent in a manner that minimizes risk to public health and safety and the safety of property. Emergency abort involves failure of a vehicle, safety-critical system, or flight safety system such that contingency abort is not possible.

Federal launch range means a launch site, from which launches routinely take place, that is owned and operated by the government of the United States.

Flight safety system means a system designed to limit or restrict the hazards to public health and safety and the safety of property presented by a launch vehicle or reentry vehicle while in flight by initiating and accomplishing a controlled ending to vehicle flight. A flight safety system may be destructive resulting in intentional break up of a vehicle or non-destructive, such as engine thrust termination enabling vehicle landing or safe abort capability.

Hazardous materials means hazardous materials as defined in 49 CFR 172.101.

Launch means to place or try to place a launch vehicle or reentry vehicle and any payload from Earth in a suborbital trajectory, in Earth orbit in outer space, or otherwise in outer space, and includes activities involved in the preparation of a launch vehicle for flight, when those activities take place at a launch site in the United States. The term launch includes the flight of a launch vehicle and pre-flight ground operations beginning with the arrival of a launch vehicle or payload at a U.S. launch site. For purposes of an ELV launch, flight ends after the licensee's last exercise of control over its launch vehicle. For purposes of an orbital RLV launch, flight ends after deployment of a payload for an RLV having payload deployment as a mission objective. For other orbital RLVs, flight ends upon completion of the first sustained, steady-state orbit of an RLV at its intended location.

Launch accident means

(1) A fatality or serious injury (as defined in 49 CFR 830.2) to any person who is not associated with the flight;

(2) Any damage estimated to exceed $25,000 to property not associated with the flight that is not located at the launch site or designated recovery area.

(3) An unplanned event occurring during the flight of a launch vehicle resulting in the known impact of a launch vehicle, its payload or any component thereof:

(i) For an expendable launch vehicle (ELV), outside designated impact limit lines; and

(ii) For an RLV, outside a designated landing site.

Launch incident means an unplanned event occurring during the flight of a launch vehicle, other than a launch accident, involving a malfunction of a flight safety system or safety-critical system or failure of the licensee's safety organization, design or operations.

Launch operator means a person who conducts or who will conduct the launch of a launch vehicle and any payload.

Launch site means the location on Earth from which a launch takes place (as defined in a license the Secretary issues or transfers under this chapter) and necessary facilities at that location.

Launch vehicle means a vehicle built to operate in, or place a payload in, outer space or a suborbital rocket.

Mishap means a launch or reentry accident, launch or reentry incident, launch site accident, failure to complete a launch or reentry as planned, or an unplanned event or series of events resulting in a fatality or serious injury (as defined in 49 CFR 830.2), or resulting in greater than $25,000 worth of damage to a payload, a launch or reentry vehicle, a launch or reentry support facility or government property located on the launch or reentry site.

Operation of a launch site means the conduct of approved safety operations at a permanent site to support the launching of vehicles and payloads.

Operation of a reentry site means the conduct of safety operations at a permanent site on Earth at which a reentry vehicle and its payload, if any, is intended to land.

Payload means an object that a person undertakes to place in outer space by means of a launch vehicle, including components of the vehicle specifically designed or adapted for that object.

Person means an individual or an entity organized or existing under the laws of a state or country.

Reenter; reentry means to return or attempt to return, purposefully, a reentry vehicle and its payload, if any, from Earth orbit or from outer space to Earth. The term ''reenter; reentry'' includes activities conducted in Earth orbit or outer space to determine reentry readiness and that are critical to ensuring public health and safety and the safety of property during reentry flight. The term ''reenter; reentry'' also includes activities conducted on the ground after vehicle landing on Earth to ensure the reentry vehicle does not pose a threat to public health and safety or the safety of property.

Reentry accident means any unplanned event occurring during the reentry of a reentry vehicle resulting in the known impact of the reentry vehicle, its payload, or any component thereof outside a designated reentry site; a fatality or serious injury (as defined in 49 CFR 830.2) to any person who is not associated with the reentry; or any damage estimated to exceed $25,000 to property not associated with the reentry and not located within a designated reentry site.

Reentry incident means any unplanned event occurring during the reentry of a reentry vehicle, other than a reentry accident, involving a malfunction of a reentry safety-critical system or failure of the licensee's safety organization, procedures, or operations.

Reentry operator means a person responsible for conducting the reentry of a reentry vehicle as specified in a license issued by the FAA.

Reentry site means the location on Earth where a reentry vehicle is intended to return. It includes the area within three standard deviations of the intended landing point (the predicted three-sigma footprint).

Reentry vehicle means a vehicle designed to return from Earth orbit or outer space to Earth substantially intact. A reusable launch vehicle that is designed to return from Earth orbit or outer space to Earth substantially intact is a reentry vehicle.

Reusable launch vehicle (RLV) means a launch vehicle that is designed to return to Earth substantially intact and therefore may be launched more than one time or that contains vehicle stages that may be recovered by a launch operator for future use in the operation of a substantially similar launch vehicle.

Safety-critical means essential to safe performance or operation. A safety-critical system, subsystem, condition, event, operation, process or item is one whose proper recognition, control, performance or tolerance is essential to system operation such that it does not jeopardize public safety.

Vehicle safety operations personnel means those persons whose job performance is critical to public health and safety or the safety of property during RLV or reentry operations.

State and United States means, when used in a geographical sense, the several States, the District of Columbia, the Commonwealth of Puerto Rico, American Samoa, the United States Virgin Islands, Guam, and any other commonwealth, territory, or possession of the United States; and

United States citizen means:

(1) Any individual who is a citizen of the United States;

(2) Any corporation, partnership, joint venture, association, or other entity organized or existing under the laws of the United States or any State; and

(3) Any corporation, partnership, joint venture, association, or other entity which is organized or exists under the laws of a foreign nation, if the controlling interest in such entity is held by an individual or entity described in paragraph (1) or (2) of this definition. *Controlling interest* means ownership of an amount of equity in such entity sufficient to direct management of the entity or to void transactions entered into by management. Ownership of at least fifty-one percent of the equity in an entity by persons described in paragraph (1) or (2) of this definition creates a rebuttable presumption that such interest is controlling.

[Doc. No. FAA–1999–5535, 65 FR 56656, Sept. 19, 2000, as amended by Amdt. 401–2, 65 FR 62861, Oct. 19, 2000]

SUBCHAPTER B—PROCEDURE

PART 404—REGULATIONS AND LICENSING REQUIREMENTS

Subpart A—General

Sec.
404.1 Scope.
404.3 Filing of petitions to the Associate Administrator.
404.5 Action on petitions.

Subpart B—Rulemaking

404.11 General.
404.13 Petitions for extension of time to comment.
404.15 Consideration of comments received.
404.17 Additional rulemaking proceedings.
404.19 Hearings.

AUTHORITY: 49 U.S.C. 70101–70121.

SOURCE: Docket No. 43810, 53 FR 11013, Apr. 4, 1988, unless otherwise noted.

Subpart A—General

§ 404.1 Scope.

Under 49 U.S.C. 70105, this part establishes procedures for issuing regulations to implement the provisions of 49 U.S.C. Subtitle IX, chapter 701, and for eliminating or waiving requirements of Federal law otherwise applicable to the licensing of commercial space transportation activities under 49 U.S.C. Subtitle IX, chapter 701.

[Doc. No. FAA–1999–5535, 65 FR 56657, Sept. 19, 2000]

§ 404.3 Filing of petitions to the Associate Administrator.

(a) Any person may petition the Associate Administrator to issue, amend, or repeal a regulation to eliminate as a requirement for a license any requirement of Federal law applicable to commercial space launch and reentry activities and the operation of launch and reentry sites or to waive any such requirement in the context of a specific application for a license.

(b) Each petition filed under this section shall:

(1) Be submitted in duplicate to the Documentary Services Division, Attention Docket Section, Room 4107, U.S. Department of Transportation, 400 Seventh Street, SW., Washington, DC 20590;

(2) Set forth the text or substance of the regulation or amendment proposed, the regulation to be repealed, or the licensing requirement to be eliminated or waived;

(3) In the case of a petition for a waiver, explain the nature and extent of the relief sought;

(4) Contain any facts, views, and data available to the petitioner to support the action requested; and

(5) In the case of a petition for a waiver, be submitted at least 60 days before the proposed effective date of the waiver unless good cause for later submission is shown in the petition.

(c) A petition for rulemaking filed under this section shall contain a summary, which the Associate Administrator may cause to be published in the FEDERAL REGISTER, which includes:

(1) A brief description of the general nature of the action requested; and

(2) A brief description of the pertinent reasons presented in the petition for instituting the rulemaking.

[53 FR 11013, Apr. 4, 1988, as amended by Amdt. 404–1, 65 FR 56657, Sept. 19, 2000; Amdt. 404–2, 68 FR 35289, June 13, 2003]

§ 404.5 Action on petitions.

(a) *General.* No public hearing, argument or other proceeding is held on a petition before its disposition under this section.

(b) *Grants.* In the case of a petition for a waiver, the Associate Administrator may grant the waiver if the Associate Administrator determines that the waiver is in the public interest and will not jeopardize public health and safety, the safety or property, or any national security or foreign policy interest of the United States. In all other cases, if the Associate Administrator determines that the petition contains adequate justification, the Associate Administrator initiates a rulemaking action under Subpart B of this part.

(c) *Denials.* If the Associate Administrator determines that the petition does not justify initiating rulemaking action or granting the waiver, the petition is denied.

(d) *Notification.* Whenever the Associate Administrator determines that a petition should be granted or denied, the petitioner is notified of the Associate Administrator's action and the reasons supporting it.

[53 FR 11013, Apr. 4, 1988, as amended by Amdt. 404–2, 68 FR 35289, June 13, 2003]

Subpart B—Rulemaking

§ 404.11 General.

(a) Unless the Associate Administrator finds, for good cause, that notice is impractical, unnecessary, or contrary to the public interest, a notice of proposed rulemaking is issued and interested persons are invited to participate in proceedings related to each substantive rule proposed.

(b) Unless the Associate Administrator determines that notice and comment is necessary or desirable, interpretive rules, general statements of policy, and rules relating to organization, procedure, or practice are issued as final rules without notice or other proceedings.

(c) In the Associate Administrator's discretion, interested persons may be invited to participate in the rulemaking proceedings described in § 404.19 of this Subpart.

[53 FR 11013, Apr. 4, 1988, as amended by Amdt. 404–2, 68 FR 35289, June 13, 2003]

§ 404.13 Petitions for extension of time to comment.

(a) Any person may petition the Associate Administrator for an extension of time to submit comments in response to a notice of proposed rulemaking. The petition shall be submitted in duplicate not less than three days before expiration of the time stated in the notice. The filing of the petition does not automatically extend the time for petitioner's comments.

(b) The Associate Administrator grants the petition only if the petitioner shows a substantive interest in the proposed rule and good cause for the extension, and if the extension is in the public interest. If an extension is granted, it is granted as to all persons and is published in the FEDERAL REGISTER.

[53 FR 11013, Apr. 4, 1988, as amended by Amdt. 404–2, 68 FR 35289, June 13, 2003]

§ 404.15 Consideration of comments received.

All timely comments are considered before final action is taken on a rulemaking proposal. Late filed comments may be considered to the extent possible, provided they do not cause undue additional expense or delay.

§ 404.17 Additional rulemaking proceedings.

The Director may initiate any additional rulemaking proceedings, if necessary or desirable. For example, the Associate Administrator may invite interested persons to present oral arguments, participate in conferences, appear at informal hearings, or participate in any other proceedings.

[53 FR 11013, Apr. 4, 1988, as amended by Amdt. 404–2, 68 FR 35289, June 13, 2003]

§ 404.19 Hearings.

(a) Sections 556 and 557 of Title 5, United States Code, do not apply to hearings held under this part. As a fact-finding forum, each hearing held under this part is nonadversarial and there are no formal pleadings or adverse parties. Any rule issued in a proceeding in which a hearing is held is not based exclusively on the record of the hearing, but on the entire record of the rulemaking proceeding.

(b) The Associate Administrator designates a representative to conduct any hearing held under this part. The FAA Chief Counsel designates a legal officer for the hearing.

[53 FR 11013, Apr. 4, 1988, as amended by Amdt. 404–2, 68 FR 35289, June 13, 2003]

PART 405—INVESTIGATIONS AND ENFORCEMENT

Sec.

405.1 Monitoring of licensed and other activities.
405.3 Authority to modify, suspend or revoke.
405.5 Emergency orders.

AUTHORITY: 49 U.S.C. 70101–70121.

SOURCE: Docket No. 43810, 53 FR 11014, Apr. 4, 1988, unless otherwise noted.

§ 405.1 Monitoring of licensed and other activities.

Each licensee must allow access by and cooperate with Federal officers or employees or other individuals authorized by the Associate Administrator to observe licensed facilities and activities, including launch sites and reentry sites, as well as manufacturing, production, and testing facilities, or assembly sites used by any contractor or a licensee in the production, assembly, or testing of a launch or reentry vehicle and in the integration of a payload with its launch or reentry vehicle. Observations are conducted to monitor the activities of the licensee or contractor at such time and to such extent as the Associate Administrator considers reasonable and necessary to determine compliance with the license or to perform the Associate Administrator's responsibilities pertaining to payloads for which no Federal license, authorization, or permit is required.

[Doc. No. FAA–1999–5535, 65 FR 56657, Sept. 19, 2000]

§ 405.3 Authority to modify, suspend or revoke.

(a) Upon application by the licensee or upon the Office's own initiative, the Office may modify a license issued under this chapter if the Office finds that the modification is consistent with the requirements of the Act.

(b) If the Office finds that a licensee has substantially failed to comply with any requirement of the Act, any regulation issued under the Act, the terms and conditions of a license, or any other applicable requirement, or that public health and safety, the safety of property or any national security or foreign policy interest of the United States so require, the Office may suspend or revoke any license issued to such licensee under this chapter.

(c) Unless otherwise specified by the Office, any modification, suspension or revocation made by the Office under this section:

(1) Takes effect immediately; and

(2) Continues in effect during any review of such action under Part 406 of this chapter.

(d) Whenever the Office takes any action under this section, the Office immediately notifies the licensee in writing of the Office's finding and the action which the Office has taken or proposes to take regarding such finding.

§ 405.5 Emergency orders.

The Associate Administrator may immediately terminate, prohibit, or suspend a licensed launch, reentry, or operation of a launch or reentry site if the Associate Administrator determines that—

(a) The licensed launch, reentry, or operation of a launch or reentry site is detrimental to public health and safety, the safety of property, or any national security or foreign policy interest of the United States; and

(b) The detriment cannot be eliminated effectively through the exercise of other authority of the Office.

[53 FR 11014, Apr. 4, 1988, as amended by Amdt. 405–1, 65 FR 56657, Sept. 19, 2000]

PART 406—INVESTIGATIONS, ENFORCEMENT, AND ADMINISTRATIVE REVIEW

Subpart A—Investigations and Enforcement

Sec.
406.1 Hearings in license and payload actions.
406.3 Submissions; oral presentation in license and payload actions.
406.5 Administrative law judge's recommended decision in license and payload actions.
406.7 [Reserved]
406.9 Civil penalties.
406.10–406.100 [Reserved]

Subpart B—Rules of Practice in FAA Space Transportation Adjudications

406.101 Applicability.
406.103 Definitions that apply in part 406.
406.105 Separation of functions for prosecuting civil penalties and advising the FAA decisionmaker.
406.107 Appearances of parties, and attorneys and representatives.
406.109 Administrative law judges—powers and limitations.
406.111 Signing documents.
406.113 Filing of documents with the Docket Management System (DMS) and sending documents to the administrative law

judge and Assistant Chief Counsel for Litigation.
406.115 Serving documents on other parties.
406.117 Confidential information.
406.119 Computation of time.
406.121 Extension of time.
406.123 Waivers.
406.127 Complaint and answer in civil penalty adjudications.
406.133 Amendment of pleadings.
406.135 Withdrawal of complaint or request for hearing.
406.137 Intervention.
406.139 Joint procedural or discovery schedule.
406.141 Motions.
406.143 Discovery.
406.147 Notice of hearing.
406.149 Evidence.
406.151 Standard of proof.
406.153 Burden of proof.
406.155 Offer of proof.
406.157 Expert or opinion witnesses.
406.159 Subpoenas.
406.161 Witness fees.
406.163 Record.
406.165 Argument before the administrative law judge.
406.167 Initial decision.
406.173 Interlocutory appeals.
406.175 Appeal from initial decision.
406.177 Petition to reconsider or modify a final decision and order of the FAA decisionmaker on appeal.
406.179 Judicial review of a final decision and order.

AUTHORITY: 49 U.S.C. 70101–70121.

SOURCE: Docket No. FAA–2001–8607, 66 FR 2180, Jan. 10, 2001, unless otherwise noted.

Subpart A—Investigations and Enforcement

§406.1 Hearings in license and payload actions.

(a) Pursuant to 49 U.S.C. 70110, the following are entitled to a determination on the record after an opportunity for a hearing in accordance with 5 U.S.C. 554.

(1) An applicant for a license and a proposed transferee of a license regarding any decision to issue or transfer a license with conditions or to deny the issuance or transfer of such license;

(2) An owner or operator of a payload regarding any decision to prevent the launch or reentry of the payload; and

(3) A licensee regarding any decision to suspend, modify, or revoke a license or to terminate, prohibit, or suspend any licensed activity therefore.

(b) An administrative law judge will be designated to preside over any hearing held under this part.

§406.3 Submissions; oral presentation in license and payload actions.

(a) Determinations in license and payload actions under this subpart will be made on the basis of written submissions unless the administrative law judge, on petition or on his or her own initiative, determines that an oral presentation is required.

(b) Submissions shall include a detailed exposition of the evidence or arguments supporting the petition.

(c) Petitions shall be filed as soon as practicable, but in no event more than 30 days after issuance of decision or finding under §406.1.

§406.5 Administrative law judge's recommended decision in license and payload actions.

(a) The Associate Administrator, who shall make the final decision on the matter at issue, shall review the recommended decision of the administrative law judge. The Associate Administrator shall make such final decision within thirty days of issuance of the recommended decision.

(b) The authority and responsibility to review and decide rests solely with the Associate Administrator and may not be delegated.

§406.7 [Reserved]

§406.9 Civil penalties.

(a) *Civil penalty liability*. Under 49 U.S.C. 70115(c), a person found by the FAA to have violated a requirement of the Act, a regulation issued under the Act, or any term or condition of a license issued or transferred under the Act, is liable to the United States for a civil penalty of not more than $100,000 for each violation, as adjusted for inflation. A separate violation occurs for each day the violation continues.

(b) *Delegations*. The authority to impose civil penalties is exercised by an agency attorney as described in §406.105.

(c) *Notice of proposed civil penalty*. A civil penalty action is initiated when the agency attorney advises a person, referred to as the respondent, of the

charges or other reasons upon which the FAA bases the proposed action and allows the respondent to answer the charges and to be heard as to why the civil penalty should not be imposed. A notice of proposed civil penalty states the facts alleged; any requirement of the Act, a regulation issued under the Act, or any term or condition of a license issued or transferred under the Act allegedly violated by the respondent; and the amount of the proposed civil penalty. Not later than 30 days after receipt of the notice of proposed civil penalty the respondent may elect to proceed by one or more of the following:

(1) Pay the amount of the proposed civil penalty or an agreed upon amount, in which case the agency attorney will issue either an order imposing civil penalty or a compromise order in that amount.

(2) Submit to the agency attorney one of the following:

(i) Written information, including documents and witnesses statements, demonstrating that a violation did not occur or that a penalty, or the amount of the proposed penalty, is not warranted by the circumstances.

(ii) A written request to reduce the proposed civil penalty, the amount of reduction, and the reasons and any document supporting a reduction of the proposed civil penalty, including records indicating a financial inability to pay or records showing that payment of the proposed civil penalty would prevent the person from continuing in business.

(iii) A written request for an informal conference to discuss the matter with the agency attorney and to submit relevant information.

(3) Request that a final notice of proposed civil penalty be issued so that the respondent may request a hearing in accordance with paragraph (g) of this section.

(d) *Final notice of proposed civil penalty*. A final notice of proposed civil penalty (final notice) provides the last opportunity for the respondent to request a hearing.

(1) The agency attorney issues a final notice if one of the following occurs:

(i) The respondent fails to respond to the notice of proposed civil penalty not later than 30 days after the date the respondent received the notice of proposed civil penalty.

(ii) The parties have not agreed to a resolution of the action after participating in informal procedures under paragraph (c)(2) of this section.

(iii) The respondent requests the issuance of a final notice in accordance with paragraph (c)(3) of this section.

(2) Not later than 15 days after the date the respondent received the final notice of proposed civil penalty, the respondent shall do one of the following:

(i) Submit the amount of the proposed civil penalty or an agreed-upon amount, in which case the agency attorney issues either an order imposing civil penalty or a compromise order in that amount.

(ii) Request a hearing in accordance with paragraph (g) of this section.

(e) *Order imposing civil penalty*. An order imposing civil penalty is the final order of the Secretary imposing a civil penalty. An order imposing civil penalty is issued for a violation described in paragraph (a) of this section after notice and an opportunity for a hearing.

(1) The agency attorney either issues an order imposing civil penalty, or another document becomes an order imposing civil penalty, as described below.

(i) The agency attorney issues an order imposing civil penalty if, in response to a notice of proposed civil penalty or a final notice of proposed civil penalty, the respondent pays or agrees to pay a civil penalty in the amount proposed or an agreed upon amount (other than an agreement for a compromise order under paragraph (f) of this section).

(ii) Unless the respondent requests a hearing not later than 15 days after the date the respondent received a final notice of proposed civil penalty, the final notice of proposed civil penalty becomes an order imposing civil penalty.

(iii) Unless an appeal is filed with the FAA decisionmaker in accordance with § 406.175, if the administrative law judge finds that a violation occurred and determines that a civil penalty, in an amount found appropriate by the administrative law judge, is warranted, an initial decision of an administrative

law judge under subpart B of this part becomes an order imposing civil penalty.

(iv) Unless a complaint is filed with a United States district court in accordance with §406.176, if the FAA decisionmaker finds that a violation occurred and determines that a civil penalty, in an amount found appropriate by the FAA decisionmaker, is warranted, a final decision and order of the FAA decisionmaker under subpart B of this part becomes an order imposing civil penalty. If a person seeks judicial review not later than 60 days after the final decision and order has been served on the respondent, the final decision and order is stayed.

(2) [Reserved]

(f) *Compromise order*. The agency attorney at any time may agree to compromise any civil penalty with no finding of violation. Under such agreement, the agency attorney issues a compromise order stating:

(1) The respondent agrees to pay a civil penalty.

(2) The FAA makes no finding of a violation.

(3) The compromise order may not be used as evidence of a prior violation in any subsequent civil penalty action or license action.

(g) *Request for hearing*. Any respondent who has been issued a final notice of proposed civil penalty may, not later than 15 days after the date the respondent received the final notice, request a hearing under subpart B of this part.

(1) The respondent must file a written request for hearing with the Docket Management System (Docket Management System, U.S. Department of Transportation, Room PL 401, 400 Seventh Street, SW., Washington, DC 20590–0001) and must serve a copy of the request on the agency attorney. Sections 406.113 and 406.115 state how filing and service must be done.

(2) The request for hearing must be dated and signed.

(h) *Method of payment*. A respondent must pay a civil penalty by check or money order, payable to the Federal Aviation Administration.

(i) *Collection of civil penalties*. If a respondent does not pay a civil penalty imposed by an order imposing civil penalty or a compromise order within 60 days after service of the final order, the FAA may refer the order to the United States Department of Treasury or Department of Justice to collect the civil penalty.

(j) *Exhaustion of administrative remedies*. A respondent may seek judicial review of a final decision and order of the FAA decisionmaker as provided in §406.179. A respondent has not exhausted administrative remedies for purposes of judicial review if the final order is one of the following:

(1) An order imposing civil penalty issued by an agency attorney under paragraph (e)(1)(i) of this section.

(2) A final notice of proposed civil penalty that becomes an order imposing civil penalty under paragraph (e)(1)(ii) of this section.

(3) An initial decision of an administrative law judge that was not appealed to the FAA decisionmaker.

(4) A compromise order under paragraph (f) of this section.

(k) *Compromise*. The FAA may compromise or remit a civil penalty that has been proposed or imposed under this section.

§§ 406.10–406.100 [Reserved]

Subpart B—Rules of Practice in FAA Space Transportation Adjudications

§406.101 Applicability.

(a) *Adjudications to which these rules apply*. These rules apply to the following adjudications:

(1) A civil penalty action in which the respondent has requested a hearing under §406.9.

(2) [Reserved]

(b) [Reserved]

§406.103 Definitions that apply in part 406.

For the purpose of this part:

Administrative law judge means an administrative law judge appointed pursuant to the provisions of 5 U.S.C. 3105.

Attorney means a person licensed by a state, the District of Columbia, or a territory of the United States to practice law or appear before the courts of that state or territory.

Complainant in a civil penalty action means the proponent of the civil penalty in the FAA.

FAA decisionmaker means the Associate Administrator for Commercial Space Transportation, or the Administrator of the Federal Aviation Administration, acting in the capacity of the decisionmaker on appeal; or a person who has been delegated the authority to act for the FAA decisionmaker. As used in this part, the FAA decisionmaker is the official authorized to issue a final decision and order of the Secretary in an action.

Mail means U.S. first class mail, U.S. certified mail, U.S. registered mail, or an express courier service.

Party means the respondent or the complainant.

Personal delivery includes hand-delivery or use of a same-day messenger service. ''Personal delivery'' does not include the use of Government interoffice mail service.

Properly addressed means using an address contained in agency records; a residential, business, or other address used by a person on any document submitted under this part; or any other address determined by other reasonable and available means.

Respondent means a person who has been charged with a violation.

§ 406.105 Separation of functions for prosecuting civil penalties and advising the FAA decisionmaker.

(a) *Agency attorney*. The authority to prosecute civil penalties within the FAA is exercised by an agency attorney in accordance with § 406.9.

(1) The following officials have the authority to act as the agency attorney under this part: The Deputy Chief Counsel; the Assistant Chief Counsel for Enforcement; the Assistant Chief Counsel for Regulations; the Assistant Chief Counsel for Europe, Africa, and Middle East Area Office; each Regional Counsel; and each Center Counsel. This authority may be delegated further.

(2) An agency attorney may not include:

(i) The Chief Counsel or the Assistant Chief Counsel for Litigation;

(ii) Any attorney on the staff of the Assistant Chief Counsel for Litigation who advises the FAA decisionmaker regarding an initial decision or any appeal to the FAA decisionmaker; or

(iii) Any attorney who is supervised in a civil penalty action by a person who provides such advice to the FAA decisionmaker in that action or a factually-related action.

(b) *Advisors to the FAA decisionmaker*. (1) The Chief Counsel, the Assistant Chief Counsel for Litigation or an attorney on the staff of the Assistant Chief Counsel for Litigation, will advise the FAA decisionmaker regarding an initial decision or any appeal of an action to the FAA decisionmaker.

(2) An agency employee engaged in the performance of investigative or prosecutorial functions must not, in that case or a factually-related case, participate or give advice in a decision by the administrative law judge or by the FAA decisionmaker on appeal, except as counsel or a witness in the public proceedings.

§ 406.107 Appearances of parties, and attorneys and representatives.

(a) Any party may appear and be heard in person.

(b) Any party may be accompanied, represented, or advised by an attorney or representative designated by the party.

(1) An attorney or representative who represents a party must file a notice of appearance in the action with the Docket Management System and must serve a copy of the notice of appearance on each other party before participating in any proceeding governed by this subpart.

(2) The attorney or representative must include his or her name, address, and telephone number in the notice of appearance.

(3) That attorney or representative in any proceeding governed by this subpart may examine the party.

(4) Service of a document on the party's attorney or representative is considered to be service on the party.

(c) An agency attorney represents the complainant.

§ 406.109 Administrative law judges—powers and limitations.

(a) *Powers of an administrative law judge*. In accordance with the rules of

this subpart, an administrative law judge may:

(1) Give notice of, and hold, prehearing conferences and hearings;

(2) Administer oaths and affirmations;

(3) Issue subpoenas authorized by law and requested by the parties;

(4) Rule on offers of proof;

(5) Receive relevant and material evidence;

(6) Regulate the course of the hearing in accordance with the rules of this subpart;

(7) Hold conferences to settle or to simplify the issues by consent of the parties;

(8) Dispose of procedural motions and requests; and

(9) Make findings of fact and conclusions of law, and issue an initial decision.

(b) *Duties to maintain the record.* (1) The administrative law judge must file with the DMS, or instruct the party to file with the DMS, a copy of each document that is submitted to the administrative law judge that has not been filed with DMS, except the portions of those documents that contain confidential information.

(2) The administrative law judge must file with the DMS a copy of each ruling and order issued by the administrative law judge, except those portions that contain confidential information.

(3) The administrative law judge must file with the DMS, or instruct the court reporter to file with the DMS, a copy of each transcript and exhibit, except those portions that contain confidential information.

(4) The administrative law judge must maintain any confidential information filed in accordance with §406.117 and deliver it to the Assistant Chief Counsel for Litigation when the administrative law judge no longer needs it.

(c) *Limitations on the power of the administrative law judge.* The administrative law judge may not issue an order of contempt, award costs to any party, or impose any sanction not specified in this subpart. If the administrative law judge imposes any sanction not specified in this subpart, a party may file an interlocutory appeal of right pursuant to §406.173(c). This section does not preclude an administrative law judge from issuing an order that bars a person from a specific proceeding based on a finding of obstreperous or disruptive behavior in that specific proceeding.

(d) *Disqualification.* The administrative law judge may disqualify himself or herself at any time. A party may file a motion, pursuant to §406.141(f)(8), requesting that an administrative law judge be disqualified from the proceedings.

§406.111 Signing documents.

(a) *Signature required.* The party, or the party's attorney or representative, must sign each document tendered for filing or served on each party.

(b) *Effect of signing a document.* By signing a document, the party, or the party's attorney or representative, certifies that he or she has read the document and, based on reasonable inquiry and to the best of that individual's knowledge, information, and belief, the document is—

(1) Consistent with these rules;

(2) Warranted by existing law or that a good faith argument exists for extension, modification, or reversal of existing law; and

(3) Not unreasonable or unduly burdensome or expensive, not made to harass any person, not made to cause unnecessary delay, not made to cause needless increase in the cost of the proceedings, or for any other improper purpose.

(c) *Sanctions.* If an individual signs a document in violation of this section, the administrative law judge or the FAA decisionmaker must:

(1) Strike the pleading signed in violation of this section;

(2) Strike the request for discovery or the discovery response signed in violation of this section and preclude further discovery by the party;

(3) Deny the motion or request signed in violation of this section;

(4) Exclude the document signed in violation of this section from the record;

(5) Dismiss the interlocutory appeal and preclude further appeal on that issue by the party who filed the appeal until an initial decision has been entered on the record; or

(6) Dismiss the appeal of the administrative law judge's initial decision to the FAA decisionmaker.

§ 406.113 Filing documents with the Docket Management System (DMS) and sending documents to the administrative law judge and Assistant Chief Counsel for Litigation.

(a) *The Docket Management System (DMS).* (1) Documents filed in a civil penalty adjudication are kept in the Docket Management System (DMS), except for documents that contain confidential information in accordance with § 406.117. The DMS is an electronic docket. Documents that are filed are scanned into the electronic docket and an index is made of all documents that have been filed so that any person may view the index and documents as provided in paragraph (f) of this section.

(2) A party is not required to file written interrogatories and responses, requests for production of documents or tangible items and responses, and requests for admission and responses with the Docket Management System or submit them to administrative law judge, except as provided in § 406.143.

(b) *Method of filing.* A person filing a document must mail or personally deliver the signed original and one copy of each document to the DMS at Docket Management System, U.S. Department of Transportation, Plaza Level 401, 400 7th Street, SW., Washington, DC 20590–0001. A person must serve a copy of each document on each party in accordance with § 406.115.

(c) *Date of filing.* The date of filing is the date of personal delivery; or if mailed, the mailing date shown on any certificate of service, the date shown on the postmark if there is no certificate of service, or other mailing date shown by other evidence if there is no certificate of service or postmark. The date shown in the DMS index is not necessarily the date of service. It is the date the DMS received the document.

(d) *Form.* DMS scans the documents into its electronic docket. To ensure that DMS can scan the document and correctly identify it in the index, each person filing a document must comply with the following:

(1) Each document must be legible. It may be handwritten, typewritten, or printed from a computer.

(2) Each document must have a caption on its first page, clearly visible, with the following information:

(i) ''FAA Space Adjudication.''

(ii) Case name, such as ''In the matter of X Corporation.''

(iii) FAA Case Number and DMS docket number, if assigned.

(iv) Name of the document being filed, including the party filing the document, such as ''Respondent's Motion to Dismiss.''

(v) ''Confidential information filed with administrative law judge'' or ''Confidential information filed with Assistant Chief Counsel for Litigation'' if the party is filing confidential information under § 406.117.

(3) The document must be capable of being scanned and be easy to read both in paper form and as scanned into the electronic docket. A document that meets the following specifications is capable of being scanned using automatic feeders and is easy to read both in paper form and as scanned into the electronic docket. Documents that do not meet these specifications may not be legible.

(i) On white paper.

(ii) On paper not larger than 8½ by 11 inches.

(iii) In black ink.

(iv) Text double-spaced. Footnotes and long quotes may be single spaced.

(v) At least 12 point type.

(vi) Margins at least 1 inch on each side.

(vii) The original not bound or hole-punched, only held together with removable metal clips or the like. The copy that is filed or sent to the administrative law judge or Assistant Chief Counsel for Litigation, and the copy served on another party, need not meet this specification.

(viii) The original has no tabs. The copy that is filed or sent to the administrative law judge or Assistant Chief Counsel for Litigation, and the copy served on another party, need not meet this specification.

(e) *Sending documents to the administrative law judge or Assistant Chief Counsel for Litigation.* Sending the document directly to the administrative law judge or to the Assistant Chief Counsel for Litigation is not a substitute for

filing the original with the DMS, except for confidential information under §406.117.

(f) *Viewing and copying the record.* Any person may view and copy the record, except for confidential information, as follows:

(1) During regular business hours at the Docket Management System, U.S. Department of Transportation, Plaza Level 401, 400 7th Street, SW., Washington, DC 20590–0001.

(2) Through the Internet at http://dms.dot.gov.

(3) By requesting it from the Docket Management System and paying reasonable costs.

§406.115 Serving documents on other parties.

(a) *Service required.* A person must serve on each other party at the time of filing a copy of any document filed with the Docket Management System. Service on a party's attorney or representative of record is adequate service on the party.

(b) *Method of service.* A person must serve documents by personal delivery or by mail.

(c) *Certificate of service.* A person may attach a certificate of service to a document filed with the DMS. Any certificate of service must include a statement, dated and signed by the individual filing the document, that the document was served on each party, the method of service, and the date of service.

(d) *Date of service.* The date of service is the date of personal delivery; or if mailed, the mailing date shown on the certificate of service, the date shown on the postmark if there is no certificate of service, or other mailing date shown by other evidence if there is no certificate of service or postmark. The date shown in the DMS index is not necessarily the date of service. It is the date the DMS received the document.

(e) *Additional time after service by mail.* Whenever a party has a right or a duty to act or to make any response within a prescribed period after service by mail, or on a specified date after service by mail, 5 days is added to the prescribed period.

(f) *Service by the administrative law judge.* The administrative law judge must serve a copy of each document including, but not limited to, notices of pre-hearing conferences and hearings, rulings on motions, decisions, and orders, upon each party to the proceedings by personal delivery or by mail.

(g) *Service made.* A document is deemed served in accordance with this subpart if it was properly addressed; was sent in accordance with this subpart; and was returned, not claimed, or refused. Service is considered valid as of the date and the time that the document was mailed, or personal delivery of the document was refused.

(h) *Presumption of service.* There is a presumption of service where a party or a person, who customarily receives mail, or receives it in the ordinary course of business, at either the person's residence or the person's principal place of business, acknowledges receipt of the document.

§406.117 Confidential information.

(a) *Filing confidential information.* If a party wants certain information that the party is filing not made available to the public, the party must do the following:

(1) Place the information in a separate sealed envelope and clearly mark the envelope ''CONFIDENTIAL.'' At least the first page of the document in the envelope also must be marked ''CONFIDENTIAL.''

(2) Attach to this envelope a cover document marked ''Confidential information filed with administrative law judge'' or ''Confidential information filed with Assistant Chief Counsel for Litigation.'' The cover document must include, at the least, a short statement of what is being filed, such as ''Respondent's motion for confidentiality order.''

(3) Unless such a motion has already been granted, enclose a motion for confidentiality order in accordance with paragraph (c) of this section. The motion must be in the sealed envelope if it contains confidential information; otherwise the motion must be outside of the sealed envelope.

(b) *Marked information not made public.* If a party files a document in a sealed envelope clearly marked ''CONFIDENTIAL'' the document may not

be made available to the public unless and until the administrative law judge or the FAA decisionmaker decides it may be made available to the public in accordance with 49 U.S.C. 70114.

(c) *Motion for confidentiality order*. If a party is filing, is requested to provide in discovery, or intends to offer at the hearing, information that the party does not wish to be available to the public, the party must file a motion for a confidentiality order.

(1) The party must state the specific grounds for withholding the information from the public.

(2) If the party claims that the information is protected under 49 U.S.C. 70114, and if both the complainant and the respondent agree that the information is protected under that section, the administrative law judge must grant the motion. If one party does not agree that the information is protected under 49 U.S.C. 70114 the administrative law judge must decide. Either party may file an interlocutory appeal of right under § 406.173(c).

(3) If the party claims that the information should be protected on grounds other than those provided by 49 U.S.C. 70114 the administrative law judge must grant the motion if, based on the motion and any response to the motion, the administrative law judge determines that disclosure would be detrimental to safety, disclosure would not be in the public interest, or that the information is not otherwise required to be made available to the public.

(4) If the administrative law judge determines that the information is not necessary to decide the case or would not otherwise lead to the discovery of relevant material, the administrative law judge must preclude any inquiry into the matter by any party.

(5) If the administrative law judge determines that the requested material may be disclosed during discovery, the administrative law judge may order that the material may be discovered and disclosed under limited conditions or may be used only under certain terms and conditions.

(6) If the administrative law judge determines that the requested material is necessary to decide the case, or would otherwise lead to the discovery of relevant material, and that a confidentiality order is warranted, the administrative law judge must—

(i) Provide an opportunity for review of the document by the attorneys of record off the record.

(ii) Provide procedures for excluding the information from the record, or order that portion of the record that includes confidential information be closed.

(iii) Order that the parties must not disclose the information in any manner and the parties must not use the information in any other proceeding.

(7) If an administrative law judge orders a record closed, in whole or in part:

(i) The closed record is not available to the public.

(ii) The closed record is available to the parties' attorneys of record.

(iii) The administrative law judge may determine whether the closed record is available to the parties, the parties' representatives, or other persons such as witnesses for a party.

(iv) No party, attorney of record, representative of record, or person who receives information from such persons, may disclose information that has been protected under this section except to a person authorized by this section or the administrative law judge to receive it.

(v) If a person other than one authorized by this section desires to view or copy a closed record, the person must file a motion to open the record.

§ 406.119 Computation of time.

(a) This section applies to any period of time prescribed or allowed by this subpart, by notice or order of the administrative law judge or the FAA decisionmaker, or by any applicable statute.

(b) The date of an act, event, or default, after which a designated time period begins to run, is not included in a computation of time under this subpart.

(c) The last day of a time period is included in a computation of time unless it is a Saturday, Sunday, or a legal holiday. If the last day of the time period is a Saturday, Sunday, or legal holiday, the time period runs until the end

of the next day that is not a Saturday, Sunday, or legal holiday.

§406.121 Extension of time.

Before an appeal is filed with the FAA decisionmaker, the parties may seek an extension of time as follows:

(a) *Extension of time by agreement of the parties.* The parties may agree to extend for a reasonable period the time for filing a document under this subpart with the agreement of the administrative law judge. The party seeking the extension of time must submit a draft order to the administrative law judge for signature, file it with the Docket Management System, and serve it on each party.

(b) *Motion for extension of time.* If the parties do not agree to an extension of time for filing a document, a party desiring an extension may file with the Docket Management System and serve a written motion for an extension of time not later than 7 days before the document is due unless good cause for the late filing is shown. The administrative law judge may grant the extension of time if good cause for the extension is shown.

(c) *Failure to rule.* If the administrative law judge fails to rule on a written motion for an extension of time by the date the document is due, the motion for an extension of time is granted for no more than 20 days after the original date the document was to be filed.

§406.123 Waivers.

Waivers of any rights provided by statute or regulation must be in writing or by stipulation made at a hearing and entered into the record. The parties must set forth the precise terms of the waiver and any conditions.

§406.127 Complaint and answer in civil penalty adjudications.

(a) *Complaint*—(1) *Filing.* The complainant must file the original and one copy of the complaint with the Docket Management System, or may file a written motion pursuant to §406.141(f)(1) instead of filing a complaint, not later than 20 days after receipt by the complainant of a request for hearing. The complainant should suggest a location for the hearing when filing the complaint.

(2) *Service.* The complainant must personally deliver or mail a copy of the complaint to the respondent, or the respondent's attorney or representative who has filed a notice of appearance in accordance with §406.107.

(3) *Contents of complaint.* The final notice of proposed civil penalty issued under §406.9(d) may be filed as the complaint. A complaint must set forth the following in sufficient detail to provide notice:

(i) The facts alleged.

(ii) Any requirement of the Act, a regulation issued under the Act, or any term or condition of a license issued or transferred under the Act allegedly violated by the respondent.

(iii) The proposed civil penalty.

(b) *Answer*—(1) *Time for filing.* The respondent must file an answer to the complaint, or may file a written motion pursuant to §406.141(f)(2) instead of filing an answer, not later than 30 days after service of the complaint.

(2) *Form.* The answer must be in writing. The answer may be in the form of a letter but must be dated and signed by the person responding to the complaint. The answer must be legible, and may be handwritten, typed, or printed from a computer.

(3) *Filing and service.* A respondent must file the answer with the Docket Management System and serve a copy of the answer on the agency attorney who filed the complaint.

(4) *Contents of answer*—(i) *Specific denial of allegations required.* The respondent must admit, deny, or state that the respondent is without sufficient knowledge or information to admit or deny, each numbered paragraph of the complaint. Any statement or allegation contained in the complaint that is not specifically denied in the answer constitutes an admission of the truth of that allegation. An administrative law judge shall treat a general denial of the complaint as a failure to file an answer.

(ii) *Affirmative defenses.* The answer must specifically state any affirmative defense that the respondent asserts.

(iii) *Request for relief.* The answer may include a brief statement of any relief requested.

(iv) *Hearing location*. The respondent should suggest a location for the hearing when filing the answer.

(5) *Failure to file answer*. A respondent's failure to file an answer without good cause constitutes an admission of the truth of each allegation contained in the complaint.

§ 406.133 Amendment of pleadings.

(a) *Time*. A party must file with the Docket Management System and serve on each other party any amendment to a complaint or an answer as follows:

(1) Not later than 15 days before the scheduled date of a hearing, a party may amend a complaint or an answer without the consent of the administrative law judge.

(2) Less than 15 days before the scheduled date of a hearing, the administrative law judge may allow amendment of a complaint or an answer only for good cause shown in a motion to amend.

(b) *Responses*. The administrative law judge must allow a reasonable time, but not more than 20 days from the date of filing, for other parties to respond to an amendment to a complaint or answer.

§ 406.135 Withdrawal of complaint or request for hearing.

At any time before or during a hearing, the complainant may withdraw a complaint or a party may withdraw a request for a hearing without the consent of the administrative law judge. If the complainant withdraws the complaint or a party withdraws the request for a hearing and the answer, the administrative law judge must dismiss the proceedings under this subpart with prejudice.

§ 406.137 Intervention.

(a) A person may file with the Docket Management System and serve on each other party a motion for leave to intervene as a party in an adjudication. Except for good cause shown, a motion for leave to intervene must be filed not later than 10 days before the hearing.

(b) The administrative law judge may grant a motion for leave to intervene if the administrative law judge finds that—

(1) Intervention will not unduly broaden the issues or delay the proceedings, and

(2) The intervener will be bound by any order or decision entered in the action or the intervener has a property, financial, or other legitimate interest that may not be addressed adequately by the parties.

(c) The administrative law judge may determine the extent to which an intervener may participate in the proceedings.

§ 406.139 Joint procedural or discovery schedule.

(a) *General*. The parties may agree to submit a schedule for filing all prehearing motions or for conducting discovery or both.

(b) *Form and content of schedule*. If the parties agree to a joint procedural or discovery schedule, one of the parties must file with the Docket Management System and serve the joint schedule, setting forth the dates to which the parties have agreed. One of the parties must draft an order establishing a joint schedule for the administrative law judge.

(1) The joint schedule may include, but need not be limited to, times for requests for discovery, any objections to discovery requests, responses to discovery requests, submission of prehearing motions, responses to prehearing motions, exchange of exhibits to be introduced at the hearing, and lists of witnesses that may be called at the hearing.

(2) Each party must sign the original joint schedule.

(c) *Time*. The parties may agree to submit all prehearing motions and responses and may agree to close discovery in the proceedings under the joint schedule within a reasonable time before the date of the hearing, but not later than 15 days before the hearing.

(d) *Order establishing joint schedule*. The administrative law judge must approve the joint schedule filed by the parties by signing the joint schedule and filing it with the Docket Management System.

(e) *Disputes*. The administrative law judge must resolve any dispute regarding discovery or regarding compliance

with the joint schedule as soon as possible so that the parties may continue to comply with the joint schedule.

(f) *Sanctions for failure to comply with joint schedule.* If a party fails to comply with the order establishing a joint schedule, the administrative law judge may direct that party to comply with a motion to compel discovery; or, limited to the extent of the party's failure to comply with a motion or discovery request, the administrative law judge may:

(1) Strike that portion of a party's pleadings;

(2) Preclude prehearing or discovery motions by that party;

(3) Preclude admission of that portion of a party's evidence at the hearing; or

(4) Preclude that portion of the testimony of that party's witnesses at the hearing.

§ 406.141 Motions.

(a) *General.* A party applying for an order or ruling not specifically provided in this subpart must do so by motion. A party must comply with the requirements of this section when filing a motion for consideration by the administrative law judge or the FAA decisionmaker on appeal.

(b) *Contents.* A party must state the relief sought by the motion and the particular grounds supporting that relief. If a party has evidence in support of a motion, the party must attach any evidence, including affidavits, to the motion.

(c) *Form and time.* Except for oral motions heard on the record, a motion made prior to the hearing must be in writing. Unless otherwise agreed by the parties or for good cause shown, a party must file any prehearing motion with the Docket Management System and serve each other party not later than 30 days before the hearing.

(d) *Answers to motions.* Any party may file and serve an answer, with affidavits or other evidence in support of the answer, not later than 10 days after service of a written motion on that party. When a motion is made during a hearing, the answer may be made at the hearing on the record, orally or in writing, within a reasonable time determined by the administrative law judge.

(e) *Rulings on motions.* The administrative law judge must rule on all motions as follows:

(1) *Discovery motions.* The administrative law judge must resolve all pending discovery motions not later than 10 days before the hearing.

(2) *Prehearing motions.* The administrative law judge must resolve all pending prehearing motions not later than 7 days before the hearing. If the administrative law judge issues a ruling or order orally, the administrative law judge must serve a written copy of the ruling or order, within 3 days, on each party. In all other cases, the administrative law judge must issue rulings and orders in writing and must serve a copy of the ruling or order on each party.

(3) *Motions made during the hearing.* The administrative law judge may issue rulings and orders on motions made during the hearing orally. Oral rulings or orders on motions must be made on the record.

(f) *Specific motions*—(1) *Complainant's motion to dismiss a request for a hearing as prematurely filed.* The complainant may file a motion to dismiss a request for a hearing as prematurely filed instead of filing a complaint. If the motion is not granted, the complainant must file the complaint and must serve a copy of the complaint on each party not later than 10 days after service of the administrative law judge's ruling or order on the motion to dismiss. If the motion to dismiss is granted and the proceedings are terminated without a hearing, the respondent may file an appeal in accordance with § 406.175. If required by the decision on appeal, the complainant must file a complaint and must serve a copy of the complaint on each party not later than 10 days after service of the decision on appeal.

(2) *Respondent's motions instead of an answer.* A respondent may file one or more of the following motions instead of filing an answer. If the administrative law judge denies the motion, the respondent must file an answer not later than 10 days after service of the denial of the motion.

(i) *Respondent's motion to dismiss complaint for failure to state a claim for*

which a civil penalty may be imposed. A respondent may file a motion to dismiss the complaint for failure to state a claim for which a civil penalty may be imposed instead of filing an answer. The motion must show that the complaint fails to state a violation of the Act, a regulation issued under the Act, or any term or condition of a license issued or transferred under the Act.

(ii) *Respondent's motion to dismiss allegations or complaint for staleness.* Instead of filing an answer to the complaint, a respondent may move to dismiss the complaint, or that part of the complaint that alleges a violation that occurred more than 5 years before an agency attorney issued a notice of proposed civil penalty to the respondent, as provided by 28 U.S.C. 2462.

(iii) *Respondent's motion for more definite statement.* A respondent may file a motion requesting a more definite statement of the allegations contained in the complaint instead of filing an answer. The respondent must set forth, in detail, the indefinite or uncertain allegations contained in a complaint or response to any pleading and must submit the details that the party believes would make the allegation or response definite and certain. If the administrative law judge grants the motion, the complainant must supply a more definite statement not later than 15 days after service of the ruling granting the motion. If the complainant fails to supply a more definite statement, the administrative law judge must strike the allegations in the complaint to which the motion is directed. If the administrative law judge denies the motion, the respondent must file an answer and must serve a copy of the answer on each party not later than 10 days after service of the order of denial.

(3) *Other motions to dismiss.* A party may file a motion to dismiss, specifying the grounds for dismissal.

(4) *Complainant's motion for more definite statement.* The complainant may file a motion requesting a more definite statement if an answer fails to respond clearly to the allegations in the complaint. The complainant must set forth, in detail, the indefinite or uncertain allegations contained in the answer and must submit the details that the complainant believes would make the allegation or response definite and certain. If the administrative law judge grants the motion, the respondent must supply a more definite statement not later than 15 days after service of the ruling on the motion. If the respondent fails to supply a more definite statement, the administrative law judge must strike those statements in the answer to which the motion is directed. An administrative law judge shall treat a respondent's failure to supply a more definite statement as an admission of unanswered allegations in the complaint.

(5) *Other motions for more definite statement.* A party may file a motion for more definite statement of any pleading that requires or permits a response under this subpart. A party must set forth, in detail, each indefinite or uncertain allegation contained in a pleading or response and must submit the details that would make each allegation definite and certain.

(6) *Motion to strike.* Any party may make a motion to strike any insufficient allegation or defense, or any redundant, immaterial, or irrelevant matter in a pleading. A party must file a motion to strike and must serve a copy on each party before a response to that pleading is required under this subpart or, if a response is not required, not later than 10 days after service of the pleading.

(7) *Motion for decision.* A party may make a motion for decision, regarding all or any part of the proceedings, at any time before the administrative law judge has issued an initial decision in the proceedings. The administrative law judge must grant a party's motion for decision if the pleadings, depositions, answers to interrogatories, admissions, matters that the administrative law judge has officially noticed, or evidence introduced during the hearing show that there is no genuine issue of material fact and that the party making the motion is entitled to a decision as a matter of law. The party making the motion for decision has the burden of showing that there is no genuine issue of material fact disputed by the parties.

(8) *Motion for disqualification.* A party may file a motion for disqualification. A party may file the motion at any

time after the administrative law judge has been assigned to the proceedings but must make the motion before the administrative law judge files an initial decision in the proceedings.

(i) *Motion and supporting affidavit.* A party must state the grounds for disqualification, including, but not limited to, personal bias, pecuniary interest, or other factors showing reason for disqualification, in the motion for disqualification. A party must submit an affidavit with the motion for disqualification that sets forth, in detail, the matters alleged to constitute grounds for disqualification.

(ii) *Answer.* A party may respond to the motion for disqualification not later than 5 days after service of the motion for disqualification.

(iii) *Decision on motion for disqualification.* The administrative law judge must issue a decision on the motion for disqualification not later than 15 days after the motion has been filed. If the administrative law judge finds that the motion for disqualification and supporting affidavit show a basis for disqualification, the administrative law judge must withdraw from the proceedings immediately. If the administrative law judge finds that disqualification is not warranted, the administrative law judge must deny the motion and state the grounds for the denial on the record. If the administrative law judge fails to rule on a party's motion for disqualification within 15 days after the motion has been filed, the motion is granted.

§ 406.143 Discovery.

(a) *Initiation of discovery.* Any party may initiate discovery described in this section, without the consent or approval of the administrative law judge, at any time after a complaint has been filed.

(b) *Methods of discovery.* The following methods of discovery are permitted under this section: depositions on oral examination or written questions of any person; written interrogatories directed to a party; requests for production of documents or tangible items to any person; and requests for admission by a party. A party is not required to file written interrogatories and responses, requests for production of documents or tangible items and responses, and requests for admission and responses with the Docket Management System or submit any of them to the administrative law judge. In the event of a discovery dispute, a party must attach a copy of these documents in support of a motion filed under this section.

(c) *Service on the agency.* A party must serve each discovery request directed to the agency or any agency employee with the agency attorney.

(d) *Time for response to discovery request.* Unless otherwise directed by this subpart or agreed by the parties, a party must respond to a request for discovery, including filing objections to a request for discovery, not later than 30 days after service of the request.

(e) *Scope of discovery.* Subject to the limits on discovery set forth in paragraph (f) of this section, a party may discover any matter that is not privileged and that is relevant to the subject matter of the proceeding. A party may discover information that relates to the claim or defense of any party including the existence, description, nature, custody, condition, and location of any document or other tangible item and the identity and location of any person having knowledge of discoverable matter. A party may discover facts known, or opinions held, by an expert who any other party expects to call to testify at the hearing. A party has no ground to object to a discovery request on the basis that the information sought would not be admissible at the hearing if the information sought during discovery is reasonably calculated to lead to the discovery of admissible evidence.

(f) *Limiting discovery.* The administrative law judge must limit the frequency and extent of discovery permitted by this section if a party shows that—

(1) The information requested is cumulative or repetitious;

(2) The information requested can be obtained from another less burdensome and more convenient source;

(3) The party requesting the information has had ample opportunity to obtain the information through other discovery methods permitted under this section; or

(4) The method or scope of discovery requested by the party is unduly burdensome or expensive.

(g) *Confidentiality order*. A party or person who has received a discovery request for information that is related to a trade secret, confidential or sensitive material, competitive or commercial information, proprietary data, or information on research and development, may file and serve a motion for a confidentiality order in accordance with § 406.117.

(h) *Protective order*. A party or a person who has received a request for discovery may file a motion for protective order and must serve a copy of the motion for protective order on each party. The party or person making the motion must show that the protective order is necessary to protect the party or the person from annoyance, embarrassment, oppression, or undue burden or expense. As part of the protective order, the administrative law judge may:

(1) Deny the discovery request;

(2) Order that discovery be conducted only on specified terms and conditions, including a designation of the time or place for discovery or a determination of the method of discovery; or

(3) Limit the scope of discovery or preclude any inquiry into certain matters during discovery.

(i) *Duty to supplement or amend response*. A party who has responded to a discovery request has a duty to supplement or amend the response, as soon as the information is known, as follows:

(1) A party must supplement or amend any response to a question requesting the identity and location of any person having knowledge of discoverable matters.

(2) A party must supplement or amend any response to a question requesting the identity of each person who will be called to testify at the hearing as an expert witness and the subject matter and substance of that witness' testimony.

(3) A party must supplement or amend any response that was incorrect when made or any response that was correct when made but is no longer correct, accurate, or complete.

(j) *Depositions*. The following rules apply to all depositions taken pursuant to this section:

(1) *Form*. A deposition must be taken on the record and reduced to writing. The person being deposed must sign the deposition unless the parties agree to waive the requirement of a signature.

(2) *Administration of oaths*. Within the United States, or a territory or possession subject to the jurisdiction of the United States, a party must take a deposition before a person authorized to administer oaths by the laws of the United States or authorized by the law of the place where the examination is held. In a foreign country, a party must take a deposition in any manner allowed by the Federal Rules of Civil Procedure.

(3) *Notice of deposition*. A party must serve a notice of deposition, stating the time and place of the deposition and the name and address of each person to be examined,on the person to be deposed, must submit the notice to the administrative law judge, and must file the notice with the Docket Management System, and must serve the notice on each party, not later than 7 days before the deposition. A party may serve a notice of deposition less than 7 days before the deposition only with consent of the administrative law judge. If a subpoena duces tecum is to be served on the person to be examined, the party must attach to the notice of deposition a copy of the subpoena duces tecum that describes the materials to be produced at the deposition.

(4) *Use of depositions*. A party may use any part or all of a deposition at a hearing authorized under this subpart only upon a showing of good cause. The deposition may be used against any party who was present or represented at the deposition or who had reasonable notice of the deposition.

(k) *Interrogatories*. (1) A party may not serve more than 30 interrogatories to each other party. Each subpart of an interrogatory must be counted as a separate interrogatory.

(2) A party must file a motion for leave to serve more than 30 interrogatories on a party before serving additional interrogatories on a party. The administrative law judge must grant the motion only if the party shows good cause for the party's failure to inquire about the information previously and that the information cannot reasonably be obtained using less burdensome discovery methods or be obtained from other sources.

(3) A party must answer each interrogatory separately and completely in writing.

(4) A party, or the party's attorney or representative of record, must sign the party's responses to interrogatories.

(5) If a party objects to an interrogatory, the party must state the objection and the reasons for the objection.

(6) An opposing party may offer into evidence any part or all of a party's responses to interrogatories at a hearing under this subpart to the extent that the response is relevant, material, and not repetitious.

(l) *Requests for admission*. A party may serve a written request for admission of the truth of any matter within the scope of discovery under this section or the authenticity of any document described in the request. A party must set forth each request for admission separately. A party must serve a copy of each document referenced in the request for admission unless the document has been provided or is reasonably available for inspection and copying.

(1) *Time*. A party's failure to respond to a request for admission is not later than 30 days after service of the request constitutes an admission of the truth of the statement or statements contained in the request for admission. The administrative law judge may determine that a failure to respond to a request for admission does not constitute an admission of the truth if a party shows that the failure was due to circumstances beyond the control of the party or the party's attorney or representative.

(2) *Response*. A party may object to a request for admission. The objection must be in writing and signed by the party or the party's attorney or representative of record, and must state the reasons for objection. A party may specifically deny the truth of the matter or describe the reasons why the party is unable to truthfully deny or admit the matter. If a party is unable to deny or admit the truth of the matter, the party must show that the party has made reasonable inquiry into the matter or that the information known to, or readily obtainable by, the party is insufficient to enable the party to admit or deny the matter. A party may admit or deny any part of the request for admission. If an administrative law judge determines that a response does not comply with the requirements of this rule or that the response is insufficient, the matter is admitted.

(3) *Effect of admission*. Any matter admitted or treated as admitted under this section is conclusively established for the purpose of the hearing and appeal.

(m) *Motion to compel discovery*. A party may make a motion to compel discovery if a person refuses to answer a question during a deposition, a party fails or refuses to answer an interrogatory, a person gives an evasive or incomplete answer during a deposition or when responding to an interrogatory, or a party fails or refuses to produce documents or tangible items. During a deposition, the proponent of a question may complete the deposition or may adjourn the examination before making a motion to compel if a person refuses to answer.

(n) *Failure to comply with a discovery order or order to compel*. If a party fails to comply with a discovery order or an order to compel, the administrative law judge, limited to the extent of the party's failure to comply with the discovery order or motion to compel, may:

(1) Strike that portion of a party's pleadings;

(2) Preclude prehearing or discovery motions by that party;

(3) Preclude admission of that portion of a party's evidence at the hearing; or

(4) Preclude that portion of the testimony of that party's witnesses at the hearing.

§ 406.147 Notice of hearing.

(a) *Notice.* The administrative law judge must give each party at least 60 days notice of the date, time, and location of the hearing.

(b) *Date, time, and location of the hearing.* The administrative law judge must set a reasonable date, time, and location for the hearing within the United States. The administrative law judge must consider the need for discovery and any joint procedural or discovery schedule submitted by the parties when determining the hearing date. The administrative law judge must give due regard to the convenience of the parties, the location where the majority of the witnesses reside or work, and whether a scheduled air carrier serves the location.

(c) *Earlier hearing.* With the consent of the administrative law judge, the parties may agree to hold the hearing on an earlier date than the date specified in the notice of hearing.

(d) *Space hearing consolidated with aviation hearing under 14 CFR part 13 subpart G.* With the consent of the administrative law judge, the parties may agree to hold the hearing, or parts of the hearing, together with a hearing under 14 CFR part 13 subpart G if the cases involve some common issues of fact. If the hearings are consolidated, the administrative law judge may issue a consolidated initial decision covering both cases. The Administrator will serve as the FAA decisionmaker on appeal for both cases and will issue a consolidated decision, with the Associate Administrator for Commercial Space Transportation serving as an advisor to the FAA decisionmaker.

§ 406.149 Evidence.

(a) *General.* A party is entitled to present the party's case or defense by oral, documentary, or demonstrative evidence, to submit rebuttal evidence, and to conduct any cross-examination that may be required for a full and true disclosure of the facts.

(b) *Admissibility.* A party may introduce any oral, documentary, or demonstrative evidence in support of the party's case or defense. The administrative law judge must admit any oral, documentary, or demonstrative evidence introduced by a party but must exclude irrelevant, immaterial, or unduly repetitious evidence.

(c) *Hearsay evidence.* Hearsay evidence is admissible in proceedings governed by this subpart. The fact that evidence submitted by a party is hearsay goes only to the weight of the evidence and does not affect its admissibility.

§ 406.151 Standard of proof.

The administrative law judge must issue an initial decision or must rule in a party's favor only if the decision or ruling is supported by, and in accordance with, the reliable, probative, and substantial evidence contained in the record. In order to prevail, the party with the burden of proof must prove the party's case or defense by a preponderance of reliable, probative, and substantial evidence.

§ 406.153 Burden of proof.

(a) Except in the case of an affirmative defense, in a civil penalty adjudication the burden of proof is on the complainant.

(b) Except as otherwise provided by statute or rule, the proponent of a motion, request, or order has the burden of proof.

(c) A party who has asserted an affirmative defense has the burden of proving the affirmative defense.

§ 406.155 Offer of proof.

A party whose evidence has been excluded by a ruling of the administrative law judge may offer the evidence for the record on appeal.

§ 406.157 Expert or opinion witnesses.

An employee of the FAA may not be called as an expert or opinion witness for any party other than the agency, in any proceeding governed by this part. An employee of a respondent may not be called as an expert or opinion witness for the complainant in any proceeding governed by this part to which the respondent is a party.

§ 406.159 Subpoenas.

(a) *Request for subpoena.* A party may obtain from the administrative law judge a subpoena to compel the attendance of a witness at a deposition or hearing or to require the production of

documents or tangible items. The administrative law judge must deliver the subpoena, signed by the administrative law judge but otherwise in blank, to the party. The party must complete the subpoena, stating the title of the action and the date and time for the witness' attendance or production of documents or items. The party who obtained the subpoena must serve the subpoena on the witness.

(b) *Motion to quash or modify the subpoena.* A party, or any person upon whom a subpoena has been served, may file a motion to quash or modify the subpoena at or before the time specified in the subpoena for compliance. The applicant must describe, in detail, the basis for the motion to quash or modify the subpoena including, but not limited to, a statement that the testimony, document, or tangible evidence is not relevant to the proceeding, that the subpoena is not reasonably tailored to the scope of the proceeding, or that the subpoena is unreasonable and oppressive. A motion to quash or modify the subpoena will stay the effect of the subpoena pending a decision by the administrative law judge on the motion.

(c) *Enforcement of subpoena.* Upon a showing that a person has failed or refused to comply with a subpoena, the Secretary may apply to the appropriate district court of the United States to seek enforcement of the subpoena in accordance with 49 U.S.C. 70115(c). A party may request the Secretary to seek such enforcement.

§ 406.161 Witness fees.

(a) *General.* Unless otherwise authorized by the administrative law judge, the party who applies for a subpoena to compel the attendance of a witness at a deposition or hearing, or the party at whose request a witness appears at a deposition or hearing, must pay the witness fees described in this section.

(b) *Amount.* Except for an employee of the agency who appears at the direction of the agency, a witness who appears at a deposition or hearing is entitled to the same fees and mileage expenses as are paid to a witness in a court of the United States in comparable circumstances.

§ 406.163 Record.

(a) *Exclusive record.* The transcript of all testimony in the hearing; all exhibits received into evidence; the complaint, answer, and amendments thereto; all motions, applications, and requests, and responses thereto; and all rulings constitute the exclusive record for decision of the proceedings and the basis for the issuance of any orders in the proceeding.

(b) A person may keep the original document, data, or other evidence, with the consent of the administrative law judge, by substituting a legible copy for the record.

§ 406.165 Argument before the administrative law judge.

(a) *Argument during the hearing.* During the hearing, the administrative law judge must give the parties a reasonable opportunity to present arguments on the record supporting or opposing motions, objections, and rulings if the parties request an opportunity for argument. The administrative law judge may request written arguments during the hearing if the administrative law judge finds that submission of written arguments would be reasonable.

(b) *Final oral argument.* At the conclusion of the hearing and before the administrative law judge issues an initial decision in the proceedings, the parties are entitled to submit oral proposed findings of fact and conclusions of law, exceptions to rulings of the administrative law judge, and supporting arguments for the findings, conclusions, or exceptions. At the conclusion of the hearing, a party may waive final oral argument.

(c) *Post-hearing briefs.* The administrative law judge may request written post-hearing briefs before the administrative law judge issues an initial decision if the administrative law judge finds that submission of written briefs would be reasonable. If a party files a written post-hearing brief, the party must include proposed findings of fact and conclusions of law, exceptions to rulings of the administrative law judge, and supporting arguments for the findings, conclusions, or exceptions. The administrative law judge must give the parties a reasonable opportunity, not more than 30 days after

receipt of the transcript, to prepare and submit the briefs.

§ 406.167 Initial decision.

(a) *Contents.* The administrative law judge must issue an initial decision at the conclusion of the hearing. In each oral or written decision, the administrative law judge must include findings of fact and conclusions of law, and the grounds supporting those findings and conclusions, upon all material issues of fact, the credibility of witnesses, the applicable law, any exercise of the administrative law judge's discretion, the amount of any civil penalty found appropriate by the administrative law judge, and a discussion of the basis for any order issued in the proceedings. The administrative law judge is not required to provide a written explanation for rulings on objections, procedural motions, and other matters not directly relevant to the substance of the initial decision. If the administrative law judge refers to any previous unreported or unpublished initial decision, the administrative law judge must make copies of that initial decision available to all parties and the FAA decisionmaker.

(b) *Oral decision.* Except as provided in paragraph (c) of this section, at the conclusion of the hearing, the administrative law judge must issue the initial decision and order orally on the record.

(c) *Written decision.* The administrative law judge may issue a written initial decision not later than 30 days after the conclusion of the hearing or submission of the last posthearing brief if the administrative law judge finds that issuing a written initial decision is reasonable. The administrative law judge must serve a copy of any written initial decision on each party.

§ 406.173 Interlocutory appeals.

(a) *General.* Unless otherwise provided in this subpart, a party may not appeal a ruling or decision of the administrative law judge to the FAA decisionmaker until the initial decision has been entered on the record. A decision or order of the FAA decisionmaker on an interlocutory appeal does not constitute a final order of the Secretary for the purposes of judicial review under 5 U.S.C. chapter 7.

(b) *Interlocutory appeal for cause.* If a party files a written request for an interlocutory appeal for cause, or orally requests an interlocutory appeal for cause, the proceedings are stayed until the administrative law judge issues a decision on the request. If the administrative law judge grants the request, the proceedings are stayed until the FAA decisionmaker issues a decision on the interlocutory appeal. The administrative law judge must grant an interlocutory appeal for cause if a party shows that delay of the interlocutory appeal would be detrimental to the public interest or would result in undue prejudice to any party.

(c) *Interlocutory appeals of right.* If a party notifies the administrative law judge of an interlocutory appeal of right, the proceedings are stayed until the FAA decisionmaker issues a decision on the interlocutory appeal. A party may file an interlocutory appeal, without the consent of the administrative law judge, before an initial decision has been entered in the case of:

(1) A ruling or order by the administrative law judge barring a party, or a party's attorney or representative, from the proceedings.

(2) A ruling or order by the administrative law judge allegedly in violation of the limitations on the administrative law judge under § 406.109(c).

(3) Failure of the administrative law judge to grant a motion for a confidentiality order based on 49 U.S.C. 70114, under § 406.117(c)(2).

(4) Failure of the administrative law judge to dismiss the proceedings in accordance with § 406.135.

(d) *Procedure.* A party must file with the Docket Management System and serve each other party a notice of interlocutory appeal, with supporting documents, not later than 10 days after the administrative law judge's decision forming the basis of an interlocutory appeal of right or not later than 10 days after the administrative law judge's decision granting an interlocutory appeal for cause. A party must file with the Docket Management System a reply brief, if any, and serve a copy of the reply brief on each party, not later than 10 days after service of the appeal brief. The FAA decisionmaker must render a decision on the interlocutory

appeal, on the record and as a part of the decision in the proceedings, within a reasonable time after receipt of the interlocutory appeal.

(e) *Rejection of interlocutory appeal.* The FAA decisionmaker may reject frivolous, repetitive, or dilatory appeals, and may issue an order precluding one or more parties from making further interlocutory appeals in a proceeding in which there have been frivolous, repetitive, or dilatory interlocutory appeals.

§406.175 Appeal from initial decision.

(a) *Notice of appeal.* A party may appeal the initial decision, and any decision not previously appealed pursuant to §406.173, by filing with the Docket Management System and serving on each party a notice of appeal. A party must file the notice of appeal not later than 10 days after entry of the oral initial decision on the record or service of the written initial decision on the parties.

(b) *Issues on appeal.* A party may appeal only the following issues:

(1) Whether each finding of fact is supported by a preponderance of reliable, probative, and substantial evidence;

(2) Whether each conclusion of law is made in accordance with applicable law, precedent, and public policy; and

(3) Whether the administrative law judge committed any prejudicial errors during the hearing that support the appeal.

(c) *Perfecting an appeal.* Unless otherwise agreed by the parties, a party must perfect an appeal, not later than 50 days after entry of the oral initial decision on the record or service of the written initial decision on the party, by filing an appeal brief.

(1) *Extension of time by agreement of the parties.* The parties may agree to extend the time for perfecting the appeal with the consent of the FAA decisionmaker, who serves a letter confirming the extension of time on each party.

(2) *Motion for extension.* If the parties do not agree to an extension of time for perfecting an appeal, a party desiring an extension of time may file a motion for an extension and must serve a copy of the motion on each party. The FAA decisionmaker may grant an extension if good cause for the extension is shown in the motion.

(d) *Appeal briefs.* A party must file the appeal brief with the Docket Management System and serve each party.

(1) A party must set forth, in detail, the party's specific objections to the initial decision or rulings in the appeal brief. A party also must set forth, in detail, the basis for the appeal, the reasons supporting the appeal, and the relief requested in the appeal. If the party relies on evidence contained in the record for the appeal, the party must specifically refer to the pertinent evidence contained in the record in the appeal brief.

(2) The FAA decisionmaker may dismiss an appeal, on the FAA decisionmaker's own initiative or upon motion of any other party, where a party has filed a notice of appeal but fails to perfect the appeal by timely filing an appeal brief.

(e) *Reply brief.* Unless otherwise agreed by the parties, any party may file a reply brief with the Docket Management System and serve on each other party not later than 35 days after the appeal brief has been served on that party. If the party relies on evidence contained in the record for the reply, the party must specifically refer to the pertinent evidence contained in the record in the reply brief.

(1) *Extension of time by agreement of the parties.* The parties may agree to extend the time for filing a reply brief with the consent of the FAA decisionmaker, who will serve a letter confirming the extension of time on each party.

(2) *Motion for extension.* If the parties do not agree to an extension of time for filing a reply brief, a party desiring an extension of time may file and serve a motion for an extension and must serve a copy of the motion on each party. The FAA decisionmaker may grant an extension if good cause for the extension is shown in the motion.

(f) *Other briefs.* The FAA decisionmaker may allow any person to submit an amicus curiae brief in an appeal of an initial decision. A party may not file more than one appeal brief or reply brief without permission of the FAA decisionmaker. A party may file with

the Docket Management System a motion for permission to file an additional brief and must serve a copy of the motion on each other party. The party may not file the additional brief with the motion. The FAA decisionmaker may grant permission to file an additional brief if the party demonstrates good cause for allowing additional argument on the appeal. The FAA decisionmaker will allow a reasonable time for the party to file the additional brief.

(g) *Number of copies.* A party must file the original brief and two copies of the brief with the Docket Management System and serve one copy on each other party.

(h) *Oral argument.* The FAA decisionmaker has sole discretion to permit oral argument on the appeal. On the FAA decisionmaker's own initiative or upon written motion by any party, the FAA decisionmaker may find that oral argument will contribute substantially to the development of the issues on appeal and may grant the parties an opportunity for oral argument.

(i) *Waiver of objections on appeal.* If a party fails to object to any alleged error regarding the proceedings in an appeal or a reply brief, the party waives any objection to the alleged error. The FAA decisionmaker is not required to consider any objection or argument in a brief if the party does not specifically refer in the brief to the pertinent evidence from the record.

(j) *FAA decisionmaker's decision on appeal.* The FAA decisionmaker will review the record, the briefs on appeal, and the oral argument, if any, to determine if the administrative law judge committed prejudicial error in the proceedings or that the initial decision should be affirmed, modified, or reversed. The FAA decisionmaker may affirm, modify, or reverse the initial decision, make any necessary findings, or may remand the case for any proceedings that the FAA decisionmaker determines may be necessary.

(1) The FAA decisionmaker may raise any issue, on the FAA decisionmaker's own initiative, that is required for proper disposition of the proceedings. The FAA decisionmaker will give the parties a reasonable opportunity to submit arguments on the new issues before making a decision on appeal. If an issue raised by the FAA decisionmaker requires the consideration of additional testimony or evidence, the FAA decisionmaker will remand the case to the administrative law judge for further proceedings and an initial decision related to that issue. If an issue raised by the FAA decisionmaker is solely an issue of law or the issue was addressed at the hearing but was not raised by a party in the briefs on appeal, a remand of the case to the administrative law judge for further proceedings is not required but may be provided in the discretion of the FAA decisionmaker.

(2) The FAA decisionmaker will issue the final decision and order of the Administrator on appeal in writing and will serve a copy of the decision and order on each party.

(3) A final decision and order of the FAA decisionmaker is precedent in any other civil penalty action under this part. Any issue, finding or conclusion, order, ruling, or initial decision of an administrative law judge that has not been appealed to the FAA decisionmaker is not precedent in any other civil penalty action.

§ 406.177 Petition to reconsider or modify a final decision and order of the FAA decisionmaker on appeal.

(a) *General.* Any party may petition the FAA decisionmaker to reconsider or modify a final decision and order issued by the FAA decisionmaker on appeal from an initial decision. A party must file a petition to reconsider or modify with the Docket Management System not later than 30 days after service of the FAA decisionmaker's final decision and order on appeal and must serve a copy of the petition on each party. The FAA decisionmaker will not reconsider or modify an initial decision and order issued by an administrative law judge that has not been appealed by any party to the FAA decisionmaker.

(b) *Contents.* A party must state briefly and specifically the alleged errors in the final decision and order on appeal, the relief sought by the party, and the grounds that support, the petition to reconsider or modify.

(1) If the petition is based, in whole or in part, on allegations regarding the consequences of the FAA decisionmaker's decision, the party must describe these allegations and must describe, and support, the basis for the allegations.

(2) If the petition is based, in whole or in part, on new material not previously raised in the proceedings, the party must set forth the new material and include affidavits of prospective witnesses and authenticated documents that would be introduced in support of the new material. The party must explain, in detail, why the new material was not discovered through due diligence prior to the hearing.

(c) *Repetitious and frivolous petition.* The FAA decisionmaker will not consider a repetitious or frivolous petition. The FAA decisionmaker may summarily dismiss any repetitious or frivolous petition to reconsider or modify.

(d) *Reply to petition.* Any other party may reply to a petition to reconsider or modify, not later than 10 days after service of the petition on that party, by filing a reply. A party must serve a copy of the reply on each party.

(e) *Effect of filing petition.* Unless otherwise ordered by the FAA decisionmaker, filing a petition under this section stays the effective date of the FAA decisionmaker's final decision and order on appeal, and tolls the time allowed for judicial review.

(f) *FAA decisionmaker's decision on petition.* The FAA decisionmaker may affirm, modify, or reverse the final decision and order on appeal, or may remand the case for any proceedings that the FAA decisionmaker determines may be necessary.

§406.179 Judicial review of a final decision and order.

(a) A person may seek judicial review of a final decision and order of the FAA decisionmaker as provided in 5 U.S.C. chapter 7 and 28 U.S.C. 1331. A party seeking judicial review must file with a United States district court.

(b) In accordance with §406.9(e)(iv), if a person seeks judicial review not later than 60 days after the final decision and order has been served on the respondent, the final decision and order is stayed.

(c) In accordance with §406.9(i), if a respondent does not pay a civil penalty and does not file an appeal with the United States district court within 60 days after service of the final decision and order, the FAA may refer the order to the United States Department of Treasury or Department of Justice to collect the civil penalty.

SUBCHAPTER C—LICENSING

PART 411 [RESERVED]

PART 413—LICENSE APPLICATION PROCEDURES

Sec.
413.1 Scope.
413.3 Who must obtain a license.
413.5 Pre-application consultation.
413.7 Application.
413.9 Confidentiality.
413.11 Acceptance of an application.
413.13 Complete application.
413.15 Review period.
413.17 Continuing accuracy of application; supplemental information; amendment.
413.19 Issuance of a license.
413.21 Denial of a license application.
413.23 License renewal.

AUTHORITY: 49 U.S.C. 70101–70121.

SOURCE: Amdt. 413–03, 64 FR 19614, Apr. 21, 1999, unless otherwise noted.

§ 413.1 Scope.

(a) This part prescribes the procedures applicable to applications submitted under this chapter to conduct licensed activities. These procedures apply to all applications for issuance of a license, transfer of an existing license, and renewal of an existing license.

(b) Use the following table to locate specific requirements:

Subject	Part
(1) Launch License	415
(2) License to Operate a Launch Site	420
(3) Launch and Reentry of a Reusable Launch Vehicle (RLV)	431
(4) License to Operate a Reentry Site	433
(5) Reentry of a Reentry Vehicle other than a Reusable Launch Vehicle (RLV)	435

[Amdt. 413–5, 68 FR 35289, June 13, 2003]

§ 413.3 Who must obtain a license.

(a) A person must obtain a license—

(1) To launch a launch vehicle from the United States;

(2) To operate a launch site within the United States;

(3) To reenter a reentry vehicle in the United States; or

(4) To operate a reentry site within the United States.

(b) An individual who is a U.S. citizen or an entity organized under the laws of the United States or any State must obtain a license—

(1) To launch a launch vehicle outside the United States;

(2) To operate a launch site outside of the United States;

(3) To reenter a reentry vehicle outside of the United States; or

(4) To operate a reentry site outside of the United States.

(c) A foreign entity in which a United States citizen has a controlling interest, as defined in § 401.5 of this chapter, must obtain a launch license to launch a launch vehicle from or a license to operate a launch site within—

(1) Any place that is both outside the United States and outside the territory of any foreign nation, unless there is an agreement in force between the United States and a foreign nation providing that such foreign nation shall exercise jurisdiction over the launch or the operation of the launch site; or

(2) The territory of any foreign nation if there is an agreement in force between the United States and that foreign nation providing that the United States shall exercise jurisdiction over the launch or the operation of the launch site.

(d) A foreign entity in which a U.S. citizen has a controlling interest, as defined in § 401.5 of this chapter, must obtain a license to reenter a reentry vehicle or to operate a reentry site in—

(1) Any place that is outside the United States and outside the territory of any foreign nation, unless there is an agreement in force between the United States and a foreign nation providing that such foreign nation shall exercise jurisdiction over the reentry or the operation of the reentry site; or

(2) The territory of any foreign nation if there is an agreement in force between the United States and that foreign nation providing that the United States shall exercise jurisdiction over the reentry or the operation of the reentry site.

[Doc. No. FAA–1999–5535, 65 FR 56658, Sept. 19, 2000]

§413.5 Pre-application consultation.

A prospective applicant shall consult with the FAA before submitting an application to discuss the application process and potential issues relevant to the FAA's licensing decision. Early consultation enables an applicant to identify potential licensing issues at the planning stage when changes to a license application or to proposed licensed activities are less likely to result in significant delay or costs to the applicant.

§413.7 Application.

(a) *Form.* An application must be in writing, in English and filed in duplicate with the Federal Aviation Administration, Associate Administrator for Commercial Space Transportation, AST–200, Room 331, 800 Independence Avenue, S.W., Washington, D.C. 20591. Attention: Licensing and Safety Division, Application Review.

(b) *Administrative information.* An application must identify the following:

(1) The name and address of the applicant;

(2) The name, address, and telephone number of any person to whom inquiries and correspondence should be directed; and

(3) The type of license for which the applicant is applying.

(c) *Signature and certification of accuracy.* An application must be legibly signed, dated, and certified as true, complete, and accurate by one of the following:

(1) *For a corporation:* An officer authorized to act for the corporation in licensing matters.

(2) *For a partnership or a sole proprietorship:* A general partner or proprietor, respectively.

(3) *For a joint venture, association, or other entity:* An officer or other individual duly authorized to act for the joint venture, association, or other entity in licensing matters.

§413.9 Confidentiality.

(a) Any person furnishing information or data to the FAA may request in writing that trade secrets or proprietary commercial or financial data be treated as confidential. The request must be made at the time the information or data is submitted, and state the period of time for which confidential treatment is desired.

(b) Information or data for which any person or agency requests confidentiality must be clearly marked with an identifying legend, such as ''Proprietary Information,'' ''Proprietary Commercial Information,'' ''Trade Secret,'' or ''Confidential Treatment Requested.'' Where this marking proves impracticable, a cover sheet containing the identifying legend must be securely attached to the compilation of information or data for which confidential treatment is requested.

(c) If a person requests that previously submitted information or data be treated confidentially, the FAA will do so to the extent practicable in light of any prior distribution of the information or data.

(d) Information or data for which confidential treatment has been requested or information or data that qualifies for exemption under section 552(b)(4) of Title 5, United States Code, will not be disclosed to the public unless the Associate Administrator determines that the withholding of the information or data is contrary to the public or national interest.

§413.11 Acceptance of an application.

The FAA will initially screen an application to determine whether the application is sufficiently complete to enable the FAA to initiate the reviews or evaluations required under any applicable part of this chapter. After completion of the initial screening, the FAA notifies the applicant, in writing, of one of the following:

(a) The application is accepted and the FAA will initiate the reviews or evaluations required for a licensing determination under this chapter; or

(b) The application is so incomplete or indefinite as to make initiation of the reviews or evaluations required for a licensing determination under this chapter inappropriate, and the application is rejected. The notice will state the reason(s) for rejection and corrective actions necessary for the application to be accepted. The FAA may return a rejected application to the applicant or may hold it pending additional submissions by the applicant.

§ 413.13 Complete application.

Acceptance by the FAA of an application does not constitute a determination that the application is complete. If, in addition to the information required by the applicable parts of this chapter, the FAA requires other information necessary for a determination that public health and safety, safety of property and national security and foreign policy interests of the United States are protected during the conduct of a licensed activity, an applicant shall submit the additional information required to show compliance with this chapter.

§ 413.15 Review period.

(a) *180-day review*. Unless otherwise specified in this chapter, the FAA reviews and makes a determination on a license application within 180 days of receipt of an accepted application.

(b) *Review period tolled*. If an accepted application does not provide sufficient information to continue or complete the reviews or evaluations required by this chapter for a licensing determination, or an issue exists that would affect a licensing determination, the FAA notifies the applicant, in writing, and informs the applicant of any information required to complete the application. If further review is impracticable, the 180-day review period shall be tolled pending receipt by the FAA of the requested information.

(c) *120-day notice*. If the FAA has not made a licensing determination within 120 days of receipt of an accepted application, the FAA informs the applicant, in writing, of any outstanding information needed to complete the reviews or evaluations required by this chapter for a licensing determination, or of any pending issues that would affect the licensing determination.

§ 413.17 Continuing accuracy of application; supplemental information; amendment.

(a) An applicant is responsible for the continuing accuracy and completeness of information furnished to the FAA as part of a pending license application. If at any time information provided by an applicant as part of a license application is no longer accurate and complete in all material respects, the applicant shall submit a statement furnishing the new or corrected information. As part of its submission, the applicant shall recertify the accuracy and completeness of the application in accordance with section 413.7. An applicant's failure to comply with any of the requirements set forth in this paragraph is a sufficient basis for denial of a license application.

(b) An applicant may amend or supplement a license application at any time prior to issuance or transfer of a license.

(c) Willful false statements made in any application or document relating to an application or license are punishable by fine and imprisonment under section 1001 of Title 18, United States Code, and by administrative sanctions in accordance with part 405 of this chapter.

§ 413.19 Issuance of a license.

After the FAA completes its reviews and makes the approvals and determinations required by this chapter for a license, the FAA issues a license to an applicant in accordance with this chapter.

§ 413.21 Denial of a license application.

(a) The FAA informs a license applicant, in writing, if its application has been denied and states the reasons for denial.

(b) An applicant whose license application is denied may either:

(1) Attempt to correct any deficiencies identified by the FAA and request reconsideration of the revised application. The FAA has 60 days or the number of days remaining in the 180-day review period, whichever is greater, within which to reconsider its licensing determination; or

(2) Request a hearing in accordance with part 406 of this chapter, for the purpose of showing why the application should not be denied.

(c) An applicant whose license application is denied after reconsideration under paragraph (b)(1) of this section may request a hearing in accordance with paragraph (b)(2) of this section.

§ 413.23 License renewal.

(a) *Eligibility*. A licensee may apply to renew its license by submitting to the

FAA a written application for renewal of the license at least 90 days before the expiration date of the license.

(b) *Application.*(1) A license renewal application shall satisfy the requirements set forth in this part and any other applicable part of this chapter.

(2) The application may incorporate by reference information provided as part of the application for the expiring license or any modification to that license.

(3) The applicant must describe any proposed changes in its conduct of licensed activities and provide any additional clarifying information required by the FAA.

(c) *Review of application.* The FAA conducts the reviews required under this chapter for a license to determine whether the applicant's license may be renewed for an additional term. The FAA may incorporate by reference any findings that are part of the record for the expiring license.

(d) *Grant of license renewal.* After completion by the FAA of the reviews required by this chapter for a license and issuance of the requisite approvals and determinations, the FAA issues an order amending the expiration date of the license. The FAA may impose additional or revised terms and conditions necessary to protect public health and safety and the safety of property and to protect U.S. national security and foreign policy interests.

(e) *Denial of license renewal.* The FAA informs a licensee, in writing, if the licensee's application for renewal has been denied and states the reasons for denial. A licensee whose application for renewal is denied may follow the procedures set forth in section 413.21 of this part.

PART 415—LAUNCH LICENSE

Subpart A—General

Sec.
415.1 Scope.
415.3 Types of launch licenses.
415.5 Policy and safety approvals.
415.7 Payload determination.
415.9 Issuance of a launch license.
415.11 Additional license terms and conditions.
415.13 Transfer of a launch license.
415.15 Rights not conferred by launch license.
415.16–415.20 [Reserved]

Subpart B—Policy Review and Approval

415.21 General.
415.23 Policy review.
415.25 Application requirements for policy review.
415.27 Denial of policy approval.
415.28–415.30 [Reserved]

Subpart C—Safety Review and Approval for Launch From a Federal Launch Range

415.31 General.
415.33 Safety organization.
415.35 Acceptable flight risk.
415.37 Flight readiness and communications plan.
415.39 Safety at end of launch.
415.41 Accident investigation plan.
415.43 Denial of safety approval.
415.44–415.50 [Reserved]

Subpart D—Payload Review and Determination

415.51 General.
415.53 Payloads not subject to review.
415.55 Classes of payloads.
415.57 Payload review.
415.59 Information requirements for payload review.
415.61 Issuance of payload determination.
415.63 Incorporation of payload determination in license application.
415.64–415.70 [Reserved]

Subpart E—Post-Licensing Requirements—Launch License Terms and Conditions

415.71 Public safety responsibility.
415.73 Continuing accuracy of license application; application for modification of license.
415.75 Agreement(s) with federal launch range.
415.77 Records.
415.79 Launch reporting requirements.
415.81 Registration of space objects.
415.83 Financial responsibility requirements.
415.85 Compliance monitoring.
415.86–415.90 [Reserved]

Subpart F—Safety Review and Approval for Launch From a Launch Site not Operated by a Federal Launch Range

415.91 General.
415.93 Denial of safety approval.
415.94–415.100 [Reserved]

Subpart G—Environmental Review

415.101 General
415.103 Environmental information

APPENDIX A TO PART 415—FAA/USSPACECOM LAUNCH NOTIFICATION FORM

AUTHORITY: 49 U.S.C. 70101–70121.

SOURCE: Amdt. 415–03, 64 FR 19616, Apr. 21, 1999, unless otherwise noted.

Subpart A—General

§ 415.1 Scope.

This part prescribes requirements for obtaining a license to launch a launch vehicle, other than a reusable launch vehicle (RLV), and post-licensing requirements with which a licensee shall comply to remain licensed. Requirements for preparing a license application are contained in part 413 of this subchapter. Requirements for obtaining a license to launch an RLV and conduct an RLV mission are contained in part 431 of this subchapter.

[Doc. No. FAA–1999–5535, 65 FR 56658, Sept. 19, 2000]

§ 415.3 Types of launch licenses.

(a) *Launch-specific license.* A launch-specific license authorizes a licensee to conduct one or more launches, having the same launch parameters, of one type of launch vehicle from one launch site. The license identifies, by name or mission, each launch authorized under the license. A licensee's authorization to launch terminates upon completion of all launches authorized by the license or the expiration date stated in the license, whichever occurs first.

(b) *Launch operator license.* A launch operator license authorizes a licensee to conduct launches from one launch site, within a range of launch parameters, of launch vehicles from the same family of vehicles transporting specified classes of payloads. A launch operator license remains in effect for five years from the date of issuance.

§ 415.5 Policy and safety approvals.

To obtain a launch license, an applicant must obtain policy and safety approvals from the FAA. Requirements for obtaining these approvals are contained in subparts B, C and F of this part. Only a launch license applicant may apply for the approvals, and may apply for either approval separately and in advance of submitting a complete license application, using the application procedures contained in part 413 of this subchapter.

§ 415.7 Payload determination.

A payload determination is required for a launch license unless the proposed payload is exempt from payload review under § 415.53 of this part. The FAA conducts a payload review, as described in subpart D of this part, to make the determination. Either a launch license applicant or a payload owner or operator may request a review of its proposed payload using the application procedures contained in part 413 of this subchapter. Upon receipt of an application, the FAA may conduct a payload review independently of a launch license application.

§ 415.9 Issuance of a launch license.

(a) The FAA issues a launch license to an applicant who has obtained all approvals and determinations required under this chapter for a license.

(b) A launch license authorizes a licensee to conduct a launch or launches in accordance with the representations contained in the licensee's application, subject to the licensee's compliance with terms and conditions contained in license orders accompanying the license, including financial responsibility requirements.

§ 415.11 Additional license terms and conditions.

The FAA may modify a launch license at any time by modifying or adding license terms and conditions to ensure compliance with the Act and regulations.

§ 415.13 Transfer of a launch license.

(a) Only the FAA may transfer a launch license.

(b) An applicant for transfer of a launch license shall submit a license application in accordance with part 413 of this subchapter and shall meet the requirements of part 415 of this subchapter. The FAA will transfer a license to an applicant who has obtained all of the approvals and determinations required under this chapter for a license. In conducting its reviews and issuing approvals and determinations, the FAA may incorporate by reference

any findings made part of the record to support the initial licensing determination. The FAA may modify a license to reflect any changes necessary as a result of a license transfer.

§415.15 Rights not conferred by launch license.

Issuance of a launch license does not relieve a licensee of its obligation to comply with all applicable requirements of law or regulation that may apply to its activities, nor does issuance confer any proprietary, property or exclusive right in the use of any federal launch range or related facilities, airspace, or outer space.

§§415.16–415.20 [Reserved]

Subpart B—Policy Review and Approval

§415.21 General.

The FAA issues a policy approval to a license applicant unless the FAA determines that a proposed launch would jeopardize U.S. national security or foreign policy interests, or international obligations of the United States. A policy approval is part of the licensing record on which the FAA's licensing determination is based.

§415.23 Policy review.

(a) The FAA reviews a license application to determine whether it presents any issues affecting U.S. national security or foreign policy interests, or international obligations of the United States.

(b) *Interagency consultation.* (1) The FAA consults with the Department of Defense to determine whether a license application presents any issues affecting U.S. national security.

(2) The FAA consults with the Department of State to determine whether a license application presents any issues affecting U.S. foreign policy interests or international obligations.

(3) The FAA consults with other federal agencies, including the National Aeronautics and Space Administration, authorized to address issues identified under paragraph (a) of this section, associated with an applicant's launch proposal.

(c) The FAA advises an applicant, in writing, of any issue raised during a policy review that would impede issuance of a policy approval. The applicant may respond, in writing, or revise its license application.

§415.25 Application requirements for policy review.

In its launch license application, an applicant shall—

(a) Identify the model and configuration of any launch vehicle proposed for launch by the applicant.

(b) Identify structural, pneumatic, propellant, propulsion, electrical and avionics systems used in the launch vehicle and all propellants.

(c) Identify foreign ownership of the applicant as follows:

(1) For a sole proprietorship or partnership, identify all foreign ownership;

(2) For a corporation, identify any foreign ownership interests of 10% or more; and

(3) For a joint venture, association, or other entity, identify any participating foreign entities.

(d) Identify proposed launch vehicle flight profile(s), including:

(1) Launch site;

(2) Flight azimuths, trajectories, and associated ground tracks and instantaneous impact points;

(3) Sequence of planned events or maneuvers during flight;

(4) Range of nominal impact areas for all spent motors and other discarded mission hardware, within three standard deviations of the mean impact point (a 3-sigma footprint); and

(5) For each orbital mission, the range of intermediate and final orbits of each vehicle upper stage, and their estimated orbital lifetimes.

§415.27 Denial of policy approval.

The FAA notifies an applicant, in writing, if it has denied policy approval for a license application. The notice states the reasons for the FAA's determination. The applicant may respond to the reasons for the determination and request reconsideration.

§§ 415.28–415.30 [Reserved]

Subpart C—Safety Review and Approval for Launch From a Federal Launch Range

§ 415.31 General.

(a) The FAA conducts a safety review to determine whether an applicant is capable of launching a launch vehicle and its payload without jeopardizing public health and safety and safety of property. The FAA issues a safety approval to a license applicant proposing to launch from a federal launch range if the applicant satisfies the requirements of this subpart and has contracted with the federal launch range for the provision of safety-related launch services and property, as long as those launch services and the proposed use of launch property are within the federal launch range's experience. The FAA evaluates on an individual basis all other safety-related launch services and property associated with an applicant's proposal. A safety approval is part of the licensing record on which the FAA's licensing determination is based.

(b) The FAA advises an applicant, in writing, of any issue raised during a safety review that would impede issuance of a safety approval. The applicant may respond, in writing, or revise its license application.

§ 415.33 Safety organization.

(a) An applicant shall maintain a safety organization and document it by identifying lines of communication and approval authority for all launch safety decisions. Lines of communication, both within the applicant's organization and between the applicant and any federal launch range providing launch services, shall be employed to ensure that personnel perform launch safety operations in accordance with range safety requirements and with plans and procedures required by this subpart. Approval authority shall be employed to ensure compliance with range safety requirements and with plans and procedures required by this subpart.

(b) *Safety official.* An applicant shall identify by name, title, and qualifications, a qualified safety official authorized to examine all aspects of the applicant's launch safety operations and to monitor independently personnel compliance with the applicant's safety policies and procedures. The safety official shall report directly to the person responsible for an applicant's licensed launches, who shall ensure that all of the safety official's concerns are addressed prior to launch.

§ 415.35 Acceptable flight risk.

(a) *Flight risk through orbital insertion or impact.* Acceptable flight risk through orbital insertion for an orbital launch vehicle, and through impact for a suborbital launch vehicle, is measured in terms of the expected average number of casualties (E_c) to the collective members of the public exposed to debris hazards from any one launch. To obtain safety approval, an applicant shall demonstrate that the risk level associated with debris from an applicant's proposed launch shall not exceed an expected average number of 0.00003 casualties per launch ($E_c \leq 30 \times 10^{-6}$).

(b) *Hazard identification and risk assessment.* To demonstrate compliance with this section, an applicant shall submit an analysis that identifies hazards and assesses risks to public health and safety and safety of property associated with nominal and non-nominal flight under its launch proposal.

(c) A launch vehicle shall be designed to ensure that flight risks meet the criteria set forth in this section. An applicant shall identify and describe the following:

(1) Launch vehicle structure, including physical dimensions and weight;

(2) Hazardous and safety critical systems, including propulsion systems; and

(3) Drawings and schematics for each system identified under paragraph (c)(2) of this section.

(d) A launch vehicle shall be operated in a manner that ensures that flight risks meet the criteria set forth in this section. An applicant shall identify all launch operations and procedures that must be performed to ensure acceptable flight risks.

§415.37 Flight readiness and communications plan.

(a) *Flight readiness requirements.* An applicant shall designate an individual responsible for flight readiness. The applicant shall submit the following procedures for verifying readiness for safe flight:

(1) Launch readiness review procedures involving the applicant's flight safety personnel and federal launch range personnel involved in the launch. The procedures shall ensure a launch readiness review is conducted during which the individual designated under paragraph (a) of this section is provided with the following information to make a judgement as to flight readiness:

(i) Flight-readiness of safety-related launch property and services to be provided by a federal launch range;

(ii) Flight-readiness of launch vehicle and payload;

(iii) Flight-readiness of flight safety systems;

(iv) Mission rules and launch constraints;

(v) Abort, hold and recycle procedures;

(vi) Results of dress rehearsals and simulations conducted in accordance with paragraph (a)(4) of this section;

(vii) Unresolved safety issues as of the launch readiness review and plans for addressing and resolving them; and

(viii) Any additional safety information required by the individual designated under paragraph (a) of this section to determine flight readiness.

(2) Procedures that ensure mission constraints, rules and abort procedures are listed and consolidated in a safety directive or notebook approved by licensee flight safety and federal launch range personnel;

(3) Procedures that ensure currency and consistency of licensee and federal launch range countdown checklists;

(4) Dress rehearsal procedures that—

(i) Ensure crew readiness under nominal and non-nominal flight conditions;

(ii) Contain criteria for determining whether to dispense with one or more dress rehearsals; and

(iii) Verify currency and consistency of licensee and federal launch range countdown checklists.

(5) Procedures for ensuring the licensee's flight safety personnel adhere to federal launch range crew rest rules.

(b) *Communications plan requirements.* An applicant shall submit a communications plan providing licensee and federal launch range personnel communications procedures during countdown and flight. Effective issuance and communication of safety-critical information during countdown shall include hold/resume, go/no go and abort commands by licensee and federal launch range personnel during countdown. The communications plan shall describe the authority of licensee and federal launch range personnel, by individual or position title, to issue these commands. The communications plan shall also ensure that—

(1) Communication networks are assigned so that personnel identified under paragraph (b) of this section have direct access to real-time safety-critical information required for issuing hold/resume, go/no go and abort decisions and commands;

(2) Personnel identified under paragraph (b) of this section monitor common intercom channel(s) during countdown and flight; and

(3) A protocol is established for utilizing defined radio telephone communications terminology.

(c) An applicant shall submit procedures that ensure that licensee and federal launch range personnel receive a copy of the communications plan required by paragraph (b) of this section, and that the federal launch range concurs in the communications plan.

§415.39 Safety at end of launch.

To obtain safety approval, an applicant must demonstrate for any proposed launch that for all launch vehicle stages or components that reach earth orbit—

(a) There will be no unplanned physical contact between the vehicle or its components and the payload after payload separation;

(b) Debris generation will not result from the conversion of energy sources into energy that fragments the vehicle or its components. Energy sources include chemical, pressure, and kinetic energy; and

(c) Stored energy will be removed by depleting residual fuel and leaving all fuel line valves open, venting any pressurized system, leaving all batteries in a permanent discharge state, and removing any remaining source of stored energy. Other equivalent procedures may be approved in the course of the licensing process.

§ 415.41 Accident investigation plan.

(a) An applicant shall submit an accident investigation plan (AIP) containing the applicant's procedures for reporting and responding to launch accidents, launch incidents, or other mishaps, as defined in § 401.5 of this chapter. The AIP shall be signed by an individual authorized to sign and certify the application in accordance with § 413.7(c) of this chapter, and the safety official designated under § 415.33(b) of this subpart.

(b) *Reporting requirements.* An AIP shall provide for—

(1) Immediate notification to the Federal Aviation Administration (FAA) Washington Operations Center in case of a launch accident, a launch incident or a mishap that involves a fatality or serious injury (as defined in 49 CFR § 830.2).

(2) Notification within 24 hours to the Associate Administrator for Commercial Space Transportation or the Federal Aviation Administration (FAA) Washington Operations Center in the event of a mishap, other than those in § 415.41 (b) (1), that does not involve a fatality or serious injury (as defined in 49 CFR 830.2).

(3) Submission of a written preliminary report to the FAA, Associate Administrator for Commercial Space Transportation, in the event of a launch accident or launch incident, as defined in § 401.5 of this chapter, within five days of the event. The report shall identify the event as either a launch accident or launch incident, and shall include the following information:

(i) Date and time of occurrence;

(ii) Description of event;

(iii) Location of launch;

(iv) Launch vehicle;

(v) Any payload;

(vi) Vehicle impact points outside designated impact lines, if applicable;

(vii) Number and general description of any injuries;

(viii) Property damage, if any, and an estimate of its value;

(ix) Identification of hazardous materials, as defined in § 401.5 of this chapter, involved in the event, whether on the launch vehicle, payload, or on the ground;

(x) Action taken by any person to contain the consequences of the event; and

(xi) Weather conditions at the time of the event.

(c) *Response plan.* An AIP shall contain procedures that—

(1) Ensure the consequences of a launch accident, launch incident or other mishap are contained and minimized;

(2) Ensure data and physical evidence is preserved;

(3) Require the licensee to report to and cooperate with FAA and National Transportation Safety Board (NTSB) investigations and designate one or more points of contact for the FAA or NTSB; and

(4) Require the licensee to identify and adopt preventive measures for avoiding recurrence of the event.

(d) *Investigation plan.* An AIP shall contain—

(1) Procedures for investigating the cause of a launch accident, launch incident or other mishap;

(2) Procedures for reporting investigation results to the FAA; and

(3) Delineated responsibilities, including reporting responsibilities for personnel assigned to conduct investigations and for any one retained by the licensee to conduct or participate in investigations.

§ 415.43 Denial of safety approval.

The FAA notifies an applicant, in writing, if it has denied safety approval for a license application. The notice states the reasons for the FAA's determination. The applicant may respond to the reasons for the determination and request reconsideration.

§§415.44–415.50 [Reserved]

Subpart D—Payload Review and Determination

§415.51 General.

The FAA reviews a payload proposed for launch to determine whether a license applicant or payload owner or operator has obtained all required licenses, authorization, and permits, unless the payload is exempt from review under §415.53 of this subpart. If not otherwise exempt, the FAA reviews a payload proposed for launch to determine whether its launch would jeopardize public health and safety, safety of property, U.S. national security or foreign policy interests, or international obligations of the United States. A payload determination is part of the licensing record on which the FAA's licensing determination is based.

§415.53 Payloads not subject to review.

The FAA does not review payloads that are—

(a) Subject to regulation by the Federal Communications Commission (FCC) or the Department of Commerce, National Oceanic and Atmospheric Administration (NOAA); or

(b) Owned or operated by the U.S. Government.

§415.55 Classes of payloads.

The FAA may review and issue findings regarding a proposed class of payload, e.g., communications, remote sensing or navigation. However, each payload is subject to compliance monitoring by the FAA before launch to determine whether its launch would jeopardize public health and safety, safety of property, U.S. national security or foreign policy interests, or international obligations of the United States. The licensee is responsible for providing current information, in accordance with §415.79(a), regarding a payload proposed for launch not later than 60 days before a scheduled launch.

§415.57 Payload review.

(a) *Timing*. A payload review may be conducted as part of a license application review or may be requested by a payload owner or operator in advance of or apart from a license application.

(b) *Interagency consultation*. The FAA consults with other agencies to determine whether launch of a proposed payload or payload class would present any issues affecting public health and safety, safety of property, U.S. national security or foreign policy interests, or international obligations of the United States.

(1) The FAA consults with the Department of Defense to determine whether launch of a proposed payload or payload class would present any issues affecting U.S. national security.

(2) The FAA consults with the Department of State to determine whether launch of a proposed payload or payload class would present any issues affecting U.S. foreign policy interests or international obligations.

(3) The FAA consults with other federal agencies, including the National Aeronautics and Space Administration, authorized to address issues identified under paragraph (b) of this section associated with an applicant's launch proposal.

(c) The FAA advises a person requesting a payload determination, in writing, of any issue raised during a payload review that would impede issuance of a license to launch that payload or payload class. The person requesting payload review may respond, in writing, or revise its application.

§415.59 Information requirements for payload review.

(a) A person requesting review of a particular payload or payload class shall identify the following:

(1) Payload name;

(2) Payload class;

(3) Physical dimensions and weight of the payload;

(4) Payload owner and operator, if different from the person requesting payload review;

(5) Orbital parameters for parking, transfer and final orbits;

(6) Hazardous materials, as defined in §401.5 of this chapter, and radioactive materials, and the amounts of each;

(7) Intended payload operations during the life of the payload; and

(8) Delivery point in flight at which the payload will no longer be under the licensee's control.

(b) [Reserved]

§ 415.61 Issuance of payload determination.

(a) The FAA issues a favorable payload determination unless it determines that launch of the proposed payload would jeopardize public health and safety, safety of property, U.S. national security or foreign policy interests, or international obligations of the United States. The FAA advises any person who has requested a payload review of its determination, in writing. The notice states the reasons for the determination in the event of an unfavorable determination.

(b) Any person issued an unfavorable payload determination may respond to the reasons for the determination and request reconsideration.

§ 415.63 Incorporation of payload determination in license application.

A favorable payload determination issued for a payload or class of payload may be included by a license applicant as part of its application. However, any change in information provided under section 415.59 of this subpart must be reported in accordance with section 413.17 of this chapter. The FAA determines whether a favorable payload determination remains valid in light of reported changes and may conduct an additional payload review.

§ 415.64–415.70 [Reserved]

Subpart E—Post-Licensing Requirements—Launch License Terms and Conditions

§ 415.71 Public safety responsibility.

A launch licensee is responsible for ensuring the safe conduct of a licensed launch and for ensuring that public safety and safety of property are protected at all times during the conduct of a licensed launch.

§ 415.73 Continuing accuracy of license application; application for modification of license.

(a) A launch licensee is responsible for the continuing accuracy of representations contained in its application for the entire term of the license. A launch licensee must conduct a licensed launch and carry out launch safety procedures in accordance with its application. A licensee's failure to comply with the requirements of this paragraph is sufficient basis for suspension or revocation of a license.

(b) After a launch license has been issued, a licensee must apply to the FAA for modification of the license if:

(1) The launch licensee proposes to conduct a launch or carry out a launch safety procedure or operation in a manner that is not authorized by the license; or

(2) Any representation contained in the license application that is material to public health and safety or safety of property would no longer be accurate and complete or would not reflect the launch licensee's procedures governing the actual conduct of a launch. A change is material to public health and safety or safety of property if it alters or affects the licensee's launch plans or procedures submitted in accordance with subpart D of this part, class of payload, orbital destination, type of launch vehicle, flight path, launch site, launch point, or any safety system, policy, procedure, requirement, criteria or standard.

(c) An application to modify a launch license shall be prepared and submitted in accordance with part 413 of this chapter. The launch licensee shall indicate any part of its license or license application that would be changed or affected by a proposed modification.

(d) The FAA reviews approvals and determinations required by this chapter to determine whether they remain valid in light of a proposed modification. The FAA approves a modification that satisfies the requirements set forth in this part.

(e) Upon approval of modification, the FAA issues either a written approval to the launch licensee or a license order modifying the license if a stated term or condition of the license is changed, added or deleted. A written approval has the full force and effect of a license order and is part of the licensing record.

§415.75 Agreement(s) with federal launch range.

Prior to conducting a licensed launch from a federal launch range, a launch licensee or applicant shall enter into an agreement with a federal launch range providing for access to and use of U.S. Government property and services required to support a licensed launch from the facility and for public safety related operations and support. The agreement shall be in effect for the conduct of any licensed launch. A launch licensee shall comply with any requirements of the agreement(s) that may affect public safety and safety of property during the conduct of a licensed launch, including flight safety procedures and requirements.

§415.77 Records.

(a) A launch licensee shall maintain all records necessary to verify that licensed launches are conducted in accordance with representations contained in the licensee's application. A launch licensee shall retain records for three years after completion of all launches conducted under the license.

(b) In the event of a launch accident or launch incident, as defined in §405.1 of this chapter, a launch licensee shall preserve all records related to the event. Records shall be retained until completion of any federal investigation and until the FAA advises the licensee that the records need not be retained. The licensee shall make available to federal officials for inspection and copying all records required to be maintained under these regulations.

§415.79 Launch reporting requirements.

(a) Not later than 60 days before each flight conducted under a launch operator license, a licensee shall provide the FAA the following launch-specific information:

(1) Payload information contained in §415.59 of this part;

(2) Flight information, including the launch vehicle, planned flight path, including staging and impact locations, and on-orbit activity of the launch vehicle including payload delivery point(s); and

(3) Mission specific launch waivers, approved or pending, from a federal launch range from which the launch will take place, that are unique to the launch and may affect public safety.

(b) Not later than noon, EST, 15 days before each licensed flight a licensee shall submit to the FAA a completed Federal Aviation Administration/U.S. Space Command (FAA/USSPACECOM) Launch Notification Form (OMB No. 2120–0608).

(c) A launch licensee shall report a launch accident, launch incident, or a mishap that involves a fatality or serious injury (as defined in 49 CFR 830.2) immediately to the Federal Aviation Administration (FAA) Washington Operations Center and provide a written preliminary report in the event of a launch accident or launch incident, in accordance with the accident investigation plan (AIP) submitted as part of its license application under §415.41 of this part.

§415.81 Registration of space objects.

(a) To assist the U.S. Government in implementing Article IV of the 1975 Convention on Registration of Objects Launched into Outer Space, each licensee shall provide to the FAA the information required by paragraph (b) of this section for all objects placed in space by a licensed launch, including a launch vehicle and any components, except:

(1) Any object owned and registered by the U.S. Government; and

(2) Any object owned by a foreign entity.

(b) For each object that must be registered in accordance with this section, not later than thirty (30) days following the conduct of a licensed launch, a licensee shall submit the following information:

(1) The international designator of the space object(s);

(2) Date and location of launch;

(3) General function of the space object; and

(4) Final orbital parameters, including:

(i) Nodal period;

(ii) Inclination;

(iii) Apogee; and

(iv) Perigee.

§ 415.83 Financial responsibility requirements.

A launch licensee shall comply with financial responsibility requirements specified in a license or license order.

§ 415.85 Compliance monitoring.

A launch licensee shall allow access by, and cooperate with, federal officers or employees or other individuals authorized by the FAA to observe any activities of the licensee, or of the licensee's contractors or subcontractors, associated with the conduct of a licensed launch.

§§ 415.86–415.90 [Reserved]

Subpart F—-Safety Review and Approval for Launch From a Launch Site Not Operated by a Federal Launch Range

§ 415.91 General.

The FAA evaluates on an individual basis the safety-related elements of an applicant's proposal to launch a launch vehicle from a launch site not operated by a federal launch range. The FAA issues a safety approval to a license applicant proposing to launch from a launch site not operated by a federal launch range when the FAA determines that the launch demonstrates an equivalent level of safety to that provided by a launch from a federal launch range as set forth in subpart C of this part. A safety approval is part of the licensing record on which the FAA's licensing determination is based.

§ 415.93 Denial of safety approval.

The FAA notifies an applicant, in writing, if it has denied safety approval for a license application. The notice states the reasons for the FAA's determination. The applicant may respond to the reasons for the determination and request reconsideration.

§§ 415.94–415.100 [Reserved]

Subpart G—Environmental Review

§ 415.101 General.

An applicant shall provide the FAA with information for the FAA to analyze the environmental impacts associated with a proposed launch. The information provided by an applicant must be sufficient to enable the FAA to comply with the requirements of the National Environment Policy Act, 42 U.S.C. 4321 *et seq.* (NEPA), the Council on Environmental Quality Regulations for Implementing the Procedural Provisions of NEPA, 40 CFR parts 1500–1508, and the FAA's Procedures for Considering Environmental Impacts, FAA Order 1050.1D.

§ 415.103 Environmental information.

An applicant shall submit environmental information concerning:

(a) A proposed launch site not covered by existing environmental documentation;

(b) A proposed launch vehicle with characteristics falling measurably outside the parameters of existing environmental documentation;

(c) A proposed launch from an established launch site involving a vehicle with characteristics falling measurably outside the parameters of any existing environmental impact statement that applies to that site;

(d) A proposed payload that may have significant environmental impacts in the event of a mishap; and

(e) Other factors as determined by the FAA.

APPENDIX A TO PART 415—FAA/USSPACECOM LAUNCH NOTIFICATION FORM

Form Approved OMB No. 2120-0608

U.S. Department of Transportation
Federal Aviation Administration

FAA/USSPACECOM Launch Notification

1)	Launch Site & Launch Date:
2)	Earliest and Latest possible Launch Time (GMT):
3)	List of objects to achieve orbit - to include payload description, Rocket bodies, and all other objects:
4)	Launch Booster, sustainer, and strap-on descriptions:
5)	Launch operator POC - to include name, address, & phone numbers:
6)	Orbital Parameters for all objects achieving orbit
a)	inertial launch azimuth at liftoff:
b)	inertial flight azimuth after liftoff:
c)	epoch time:
d)	nominal period (min):
e)	inclination (deg):
f)	eccentricity:
g)	semimajor axis (km):
h)	argument of perigee (deg):
i)	right ascension of ascending node (deg):
j)	mean anomaly (deg):
k)	start time of orbit (hh:mm:ss after launch):
l)	end time of orbit (hh:mm:ss after launch):
7)	Injection data
a)	injection point latitude (deg n or s) & longitude (deg e):
b)	inertial azimuth at injection point:
c)	height above earth (km):

FAA Form 8800-1 (7-98) PAGE 1

FAA/USSPACECOM Launch Notification
d) injection time (hh:mm:ss after liftoff):
8) Sequence of Events from liftoff to final injection. Give the times (hh:mm:ss after liftoff) a) separation of each motor:
b) ignition of each motor:
c) cutoff of each motor:
d) jettison of pieces:
e) maneuvers:
f) reorientations:
g) deorbit:
h) ejection of special packages or other experiments:
9) Optional - Schedule for events (not included in no. 8), such as ejection or experiments, maneuvering (unclassified missions), jettison of parts, extension of antenna and solar arrays, venting, spinning or despinning attitude changes, reorientation, or anything which may affect the orbital characteristics:
10) A brief narrative description of the mission:
11) Transmitting frequencies and power (required only if space surveillance is required), including device, band, power (watts), frequency (mhz), and emission scheduled by fixed program, command, or transponder tracking:
12) Orbital objects cataloging instructions (include all orbital objects listed in no. 3, including common name, international designation, and country:

FAA Form 8800-1 (7-98) PAGE 2

PARTS 417–419 [RESERVED]

PART 420—LICENSE TO OPERATE A LAUNCH SITE

Subpart A—General

Sec.
420.1 Scope.
420.3 Applicability.
420.5 Definitions.
420.6–420.14 [Reserved]

Subpart B—Criteria and Information Requirements for Obtaining a License

420.15 Information requirements.
420.17 Bases for issuance of a license.
420.19 Launch site location review—general.
420.21 Launch site location review—launch site boundary.
420.23 Launch site location review—flight corridor.
420.25 Launch site location review—risk analysis.
420.27 Launch site location review—information requirements.
420.29 Launch site location review for unproven launch vehicles.
420.31 Agreements.
420.32–420.40 [Reserved]

Subpart C—License Terms and Conditions

420.41 License to operate a launch site—general.
420.43 Duration.
420.45 Transfer of a license to operate a launch site.
420.47 License modification.
420.49 Compliance monitoring.

Subpart D—Responsibilities of a Licensee

420.51 Responsibilities—general.
420.53 Control of public access.
420.55 Scheduling of launch site operations.
420.57 Notifications.
420.59 Launch site accident investigation plan.
420.61 Records.
420.63 Explosive siting.
420.65 Handling of solid propellants.
420.67 Storage or handling of liquid propellants.
420.69 Solid and liquid propellants located together.
420.71 Lightning protection.
APPENDIX A TO PART 420—METHOD FOR DEFINING A FLIGHT CORRIDOR
APPENDIX B TO PART 420—METHOD FOR DEFINING A FLIGHT CORRIDOR
APPENDIX C TO PART 420—RISK ANALYSIS
APPENDIX D TO PART 420—IMPACT DISPERSION AREAS AND CASUALTY EXPECTANCY ESTIMATE FOR AN UNGUIDED SUBORBITAL LAUNCH VEHICLE
APPENDIX E TO PART 420—TABLES FOR EXPLOSIVE SITE PLAN

AUTHORITY: 49 U.S.C. 70101–70121.

SOURCE: Docket No. FAA–1999–5833, 65 FR 62861, Oct. 19, 2000, unless otherwise noted.

Subpart A—General

§420.1 Scope.

This part prescribes the information and demonstrations that must be provided to the FAA as part of a license application, the bases for license approval, license terms and conditions, and post-licensing requirements with which a licensee shall comply to remain licensed. Requirements for preparing a license application are contained in part 413 of this subchapter.

§420.3 Applicability.

This part applies to any person seeking a license to operate a launch site or to a person licensed under this part. A person operating a site that only supports amateur rocket activities, as defined in 14 CFR 401.5, does not need a license under this part to operate the site.

§420.5 Definitions.

For the purpose of this part.

Ballistic coefficient means the weight of an object divided by the quantity product of the coefficient of drag of the object and the area of the object.

Compatibility means the chemical property of materials that may be located together without increasing the probability of an accident or, for a given quantity, the magnitude of the effects of such an accident.

Debris dispersion radius (D_{max}) means the estimated maximum distance from a launch point that debris travels given a worst-case launch vehicle failure and flight termination early in flight. For an expendable launch vehicle, flight termination is assumed to occur at 10 seconds into flight.

Downrange area means a portion of a flight corridor beginning where a launch area ends and ending 5,000 nautical miles from the launch point, or where the IIP leaves the surface of the Earth, whichever is shorter, for an orbital launch vehicle; and ending with

an impact dispersion area for a guided sub-orbital launch vehicle.

E,F,G coordinate system means an orthogonal, Earth-fixed, geocentric, right-handed system. The origin of the coordinate system is at the center of an ellipsoidal Earth model. The E-axis is positive directed through the Greenwich meridian. The F-axis is positive directed though 90 degrees east longitude. The EF-plane is coincident with the ellipsoidal Earth model's equatorial plane. The G-axis is normal to the EF-plane and positive directed through the north pole.

E,N,U coordinate system means an orthogonal, Earth-fixed, topocentric, right-handed system. The origin of the coordinate system is at a launch point. The E-axis is positive directed east. The N-axis is positive directed north. The EN-plane is tangent to an ellipsoidal Earth model's surface at the origin and perpendicular to the geodetic vertical. The U-axis is normal to the EN-plane and positive directed away from the Earth.

Effective casualty area (A_c) means the aggregate casualty area of each piece of debris created by a launch vehicle failure at a particular point on its trajectory. The effective casualty area for each piece of debris is the area within which 100 percent of the unprotected population on the ground are assumed to be a casualty, and outside of which 100 percent of the population are assumed not to be a casualty. An effective casualty area accounts for the characteristics of the debris piece, including its size, the path angle of its trajectory, impact explosions, and debris skip, splatter, and bounce. An effective casualty area also accounts for the size of a person.

Explosive means any chemical compound or mechanical mixture that, when subjected to heat, impact, friction, detonation or other suitable initiation, undergoes a rapid chemical change that releases large volumes of highly heated gases that exert pressure in the surrounding medium. The term applies to materials that either detonate or deflagrate.

Explosive division means the division within hazard class 1 of an explosive as defined in the United Nations Organization classification system for transport of dangerous goods, and as determined in accordance with 49 CFR part 173, subpart C.

Explosive equivalent means a measure of the blast effects from explosion of a given quantity of material expressed in terms of the weight of trinitrotoluene (TNT) that would produce the same blast effects when detonated.

Explosive hazard facility means a facility at a launch site where solid propellant, liquid propellant, or other explosives are stored or handled.

Flight azimuth means the initial direction in which a launch vehicle flies relative to true north expressed in degrees-decimal-degrees.

Flight corridor means an area on the Earth's surface estimated to contain the hazardous debris from nominal flight of a launch vehicle, and nonnominal flight of a launch vehicle assuming a perfectly functioning flight termination system or other flight safety system.

Guided suborbital launch vehicle means a suborbital rocket that employs an active guidance system.

Hazard class means the class of an explosive as defined by the United Nations Organization classification system for transport of dangerous goods, and as determined in accordance with 49 CFR part 173, subpart C.

Impact dispersion area means an area representing an estimated three standard deviation dispersion about a nominal impact point of an intermediate or final stage of a suborbital launch vehicle.

Impact dispersion factor means a constant used to estimate, using a stage apogee, a three standard deviation dispersion about a nominal impact point of an intermediate or final stage of a suborbital launch vehicle.

Impact dispersion radius (R_i) means a radius that defines an impact dispersion area.

Impact range means the distance between a launch point and the impact point of a suborbital launch vehicle stage.

Impact range factor means a constant used to estimate, when multiplied by a stage apogee, the nominal impact point of an intermediate or final stage of a suborbital launch vehicle.

Instantaneous impact point (IIP) means an impact point, following thrust termination of a launch vehicle. IIP may be calculated with or without atmospheric drag effects.

Instantaneous impact point (IIP) range rate means a launch vehicle's estimated IIP velocity along the Earth's surface.

Intraline distance means the minimum distance permitted between any two explosive hazard facilities in the ownership, possession or control of one launch site customer.

Launch area means, for a flight corridor defined in accordance with appendix A of this part, the portion of a flight corridor from the launch point to a point 100 nautical miles in the direction of the flight azimuth. For a flight corridor defined in accordance with appendix B of this part, a launch area is the portion of a flight corridor from the launch point to the enveloping line enclosing the outer boundary of the last debris dispersion circle.

Launch point means a point on the Earth from which the flight of a launch vehicle begins, and is defined by its geodetic latitude, longitude and height on an ellipsoidal Earth model.

Launch site accident means an unplanned event occurring during a ground activity at a launch site resulting in a fatality or serious injury (as defined in 49 CFR 830.2) to any person who is not associated with the activity, or any damage estimated to exceed $25,000 to property not associated with the activity.

Net explosive weight (NEW) means the total weight, expressed in pounds, of explosive material or explosive equivalency contained in an item.

Nominal means, in reference to launch vehicle performance, trajectory, or stage impact point, a launch vehicle flight where all launch vehicle aerodynamic parameters are as expected, all vehicle internal and external systems perform as planned, and there are no external perturbing influences (e.g., winds) other than atmospheric drag and gravity.

Overflight dwell time means the period of time it takes for a launch vehicle's IIP to move past a populated area. For a given populated area, the overflight dwell time is the time period measured along the nominal trajectory IIP ground trace from the time point whose normal with the trajectory intersects the most uprange part of the populated area to the time point whose normal with the trajectory intersects the most downrange part of the populated area.

Overflight exclusion zone means a portion of a flight corridor which must remain clear of the public during the flight of a launch vehicle.

Populated area means a land area with population.

Population density means the number of people per unit area in a populated area.

Position data means data referring to the current position of a launch vehicle with respect to flight time expressed through the X, Y, Z coordinate system.

Public means people and property that are not involved in supporting a licensed launch, and includes those people and property that may be located within the boundary of a launch site, such as visitors, any individual providing goods or services not related to launch processing or flight, and any other launch operator and its personnel.

Public area means any area outside a hazard area and is an area that is not in the possession, ownership or other control of a launch site operator or of a launch site customer who possesses, owns or otherwise controls that hazard area.

Public area distance means the minimum distance permitted between a public area and an explosive hazard facility.

Public traffic route distance means the minimum distance permitted between a public highway or railroad line and an explosive hazard facility.

Trajectory means the position and velocity components as a function of time of a launch vehicle relative to an x, y, z coordinate system, expressed in x, y, z, $\dot{x}$, $\dot{y}$, $\dot{z}$.

Unguided sub-orbital launch vehicle means a sub-orbital rocket that does not have a guidance system.

X, Y, Z coordinate system means an orthogonal, Earth-fixed, topocentric, right-handed system. The origin of the coordinate system is at a launch point. The x-axis coincides with the initial

launch azimuth and is positive in the downrange direction. The y-axis is positive to the left looking downrange. The xy-plane is tangent to the ellipsoidal earth model's surface at the origin and perpendicular to the geodetic vertical. The z-axis is normal to the xy-plane and positive directed away from the earth.

φ_O, λ_O, h_O means a latitude, longitude, height system where φ_0 is the geodetic latitude of a launch point, λ_0 is the east longitude of the launch point, and h_0 is the height of the launch point above the reference ellipsoid. φ_0 and λ_0 are expressed in degrees-decimal-degrees.

§§ 420.6–420.14 [Reserved]

Subpart B—Criteria and Information Requirements for Obtaining a License

§ 420.15 Information requirements.

(a) *General*—(1) *Launch site operator*. An applicant shall identify the name and address of the applicant, and the name, address, and telephone number of any person to whom inquiries and correspondence should be directed.

(2) *Launch site*. An applicant shall provide the name and location of the proposed launch site and include the following information:

(i) A list of downrange equipment;

(ii) A description of the layout of the launch site, including launch points;

(iii) The types of launch vehicles to be supported at each launch point;

(iv) The range of launch azimuths planned from each launch point; and

(v) The scheduled operational date.

(3) *Foreign ownership*. Identify foreign ownership of the applicant, as follows:

(i) For a sole proprietorship or partnership, all foreign owners or partners;

(ii) For a corporation, any foreign ownership interest of 10 percent or more; and

(iii) For a joint venture, association, or other entity, any foreign entities participating in the entity.

(b) *Environmental*. An applicant shall provide the FAA with information for the FAA to analyze the environmental impacts associated with the operation of the proposed launch site. The information provided by an applicant must be sufficient to enable the FAA to comply with the requirements of the National Environment Policy Act, 42 U.S.C. 4321 *et seq*. (NEPA), the Council on Environmental Quality Regulations for Implementing the Procedural Provisions of NEPA, 40 CFR parts 1500–1508, and the FAA's Procedures for Considering Environmental Impacts, FAA Order 1050.1D. An applicant shall submit environmental information concerning a proposed launch site not covered by existing environmental documentation, and other factors as determined by the FAA.

(c) *Launch site location*. (1) Except as provided by paragraph (c)(2) of this section, an applicant shall provide the information necessary to demonstrate compliance with §§ 420.19–420.29.

(2) An applicant who is proposing to locate a launch site at an existing launch point at a federal launch range is not required to comply with paragraph (c)(1) of this section if a launch vehicle of the same type and class as proposed for the launch point has been safely launched from the launch point.

(d) *Explosive site plan*. (1) Except as provided by paragraph (d)(2) of this section, an applicant shall submit an explosive site plan that complies with §§ 420.63, 420.65, 420.67, and 420.69.

(2) If an applicant plans to operate a launch site located on a federal launch range, and if the applicant is required by the federal launch range to comply with the federal launch range's explosive safety requirements, the applicant shall submit the explosive site plan submitted to the federal launch range.

(e) *Launch site operations*. An applicant shall provide the information necessary to demonstrate compliance with the requirements of §§ 420.53, 420.55, 420.57, 420.59, 420.61, and 420.71.

§ 420.17 Bases for issuance of a license.

(a) The FAA will issue a license under this part when the FAA determines that:

(1) The application provides the information required by § 420.15;

(2) The FAA has completed an analysis of the environmental impacts associated with the proposed operation of the launch site, in accordance with NEPA, 40 CFR parts 1500–1508, and FAA Order 1050.1D;

(3) The launch site location meets the requirements of §§ 420.19, 420.21, 420.23, 420.25, 420.27, and 420.29;

(4) The applicant has completed the agreements required by § 420.31;

(5) The application demonstrates that the applicant shall satisfy the requirements of §§ 420.53, 420.55, 420.57, 420.59, 420.61 and 420.71;

(6) The explosive site plan meets the criteria of §§ 420.63, 420.65, 420.67 and 420.69; and

(7) Issuing a license would not jeopardize foreign policy or national security interests of the United States.

(b) The FAA advises an applicant, in writing, of any issue arising during an application review that would lead to denial. The applicant may respond in writing, submit additional information, or amend its license application.

§ 420.19 Launch site location review—general.

(a) To gain approval for a launch site location, an applicant shall demonstrate that for each launch point proposed for the launch site, at least one type of expendable or reusable launch vehicle can be flown from the launch point safely. For purposes of the launch site location review:

(1) A safe launch must possess a risk level estimated, in accordance with the requirements of this part, not to exceed an expected average number of 0.00003 casualties (E_c) to the collective member of the public exposed to hazards from the flight ($E_c \leq 30 \times 10^{-6}$).

(2) Types of launch vehicles include orbital expendable launch vehicles, guided sub-orbital expendable launch vehicles, unguided sub-orbital expendable launch vehicles, and reusable launch vehicles. Orbital expendable launch vehicles are further classified by weight class, based on the weight of payload the launch vehicle can place in a 100-nm orbit, as defined in table 1.

(b) If an applicant proposes to have more than one type of launch vehicle flown from a launch point, the applicant shall demonstrate that each type of expendable or reusable launch vehicle planned to be flown from the launch point can be flown from the launch point safely.

(c) If an applicant proposes to have more than one weight class of orbital expendable launch vehicles flown from a launch point, the applicant shall demonstrate that the heaviest weight class planned to be flown from the launch point can be flown from the launch point safely.

TABLE 1 OF § 420.19—ORBITAL EXPENDABLE LAUNCH VEHICLE CLASSES BY PAYLOAD WEIGHT (LBS)

100 nm orbit	Weight class			
	Small	Medium	Medium large	Large
28 degrees inclination*	≤4400	>4400 to ≤11100	>11100 to ≤18500	>18500
90 degrees inclination	≤3300	>3300 to ≤8400	>8400 to ≤15000	>15000

*28 degrees inclination orbit from a launch point at 28 degrees latitude.

§ 420.21 Launch site location review—launch site boundary.

(a) The distance from any proposed launch point to the closest launch site boundary must be at least as great as the debris dispersion radius of the largest launch vehicle type and weight class proposed for the launch point.

(b) For a launch site supporting any expendable launch vehicle, an applicant shall use the largest distance provided by table 2 for the type and weight class of any launch vehicle proposed for the launch point.

(c) For a launch site supporting any reusable launch vehicle, an applicant shall determine the debris dispersion radius that represents the maximum distance from a launch point that debris travels given a worst-case launch vehicle failure in the launch area. An applicant must clearly and convincingly demonstrate the validity of its proposed debris dispersion radius.

TABLE 2 OF § 420.21—MINIMUM DISTANCE FROM LAUNCH POINT TO LAUNCH SITE BOUNDARY (FEET)

Orbital expendable launch vehicle class			Type of suborbital launch vehicle		
Small	Medium	Medium large	Large	Guided	Unguided
7300	9300	10600	13000	8000	1600

§ 420.23 Launch site location review—flight corridor.

(a) *Guided orbital expendable launch vehicle.* For a guided orbital expendable launch vehicle, an applicant shall define a flight corridor that:

(1) Encompasses an area that the applicant estimates, in accordance with the requirements of this part, to contain debris with a ballistic coefficient of ≥ 3 pounds per square foot, from any non-nominal flight of a guided orbital expendable launch vehicle from the launch point to a point 5000 nm downrange, or where the IIP leaves the surface of the Earth, whichever is shorter;

(2) Includes an overflight exclusion zone where the public risk criteria of 30×10^{-6} would be exceeded if one person were present in the open; and

(3) Uses one of the methodologies provided in appendix A or B of this part. The FAA will approve an alternate method if an applicant provides a clear and convincing demonstration that its proposed method provides an equivalent level of safety to that required by appendix A or B of this part.

(b) *Guided sub-orbital expendable launch vehicle.* For a guided sub-orbital expendable launch vehicle, an applicant shall define a flight corridor that:

(1) Encompasses an area that the applicant estimates, in accordance with the requirements of this part, to contain debris with a ballistic coefficient of ≥ 3 pounds per square foot, from any non-nominal flight of a guided sub-orbital expendable launch vehicle from the launch point to impact with the earth's surface;

(2) Includes an impact dispersion area for the launch vehicle's last stage;

(3) Includes an overflight exclusion zone where the public risk criteria of 30×10^{-6} would be exceeded if one person were present in the open; and

(4) Uses one of the methodologies provided in appendices A or B to this part. The FAA will approve an alternate method if an applicant provides a clear and convincing demonstration that its proposed method provides an equivalent level of safety to that required by appendix A or B of this part.

(c) *Unguided sub-orbital expendable launch vehicle.* (1) For an unguided sub-orbital expendable launch vehicle, an applicant shall define the following using the methodology provided by appendix D of this part:

(i) Impact dispersion areas that the applicant estimates, in accordance with the requirements of this part, to contain the impact of launch vehicle stages from nominal flight of an unguided sub-orbital expendable launch vehicle from the launch point to impact with the earth's surface; and

(ii) An overflight exclusion zone where the public risk criteria of 30×10^{-6} would be exceeded if one person were present in the open.

(2) The FAA will approve an alternate method if an applicant provides a clear and convincing demonstration that its proposed method provides an equivalent level of safety to that required by appendix D of this part.

(3) An applicant shall base its analysis on an unguided suborbital launch vehicle whose final launch vehicle stage apogee represents the intended use of the launch point.

(d) *Reusable launch vehicle.* For a reusable launch vehicle, an applicant shall define a flight corridor that contains the hazardous debris from nominal and non-nominal flight of a reusable launch vehicle. The applicant must provide a clear and convincing demonstration of the validity of its flight corridor.

§ 420.25 Launch site location review—risk analysis.

(a) If a flight corridor or impact dispersion area defined by section 420.23

contains a populated area, the applicant shall estimate the casualty expectation associated with the flight corridor or impact dispersion area. An applicant shall use the methodology provided in appendix C to this part for guided orbital or suborbital expendable launch vehicles and appendix D for unguided suborbital launch vehicles. The FAA will approve an alternate method if an applicant provides a clear and convincing demonstration that its proposed method provides an equivalent level of safety to that required by appendix C or D of this part. For a reusable launch vehicle, an applicant must provide a clear and convincing demonstration of the validity of its risk analysis.

(b) If the estimated expected casualty exceeds 30×10^{-6}, the FAA will not approve the location of the proposed launch point.

§ 420.27 Launch site location review—information requirements.

An applicant shall provide the following launch site location review information in its application:

(a) A map or maps showing the location of each launch point proposed, and the flight azimuth, IIP, flight corridor, and each impact range and impact dispersion area for each launch point;

(b) Each launch vehicle type and any launch vehicle class proposed for each launch point;

(c) Trajectory data;

(d) Wind data, including each month and any percent wind data used in the analysis;

(e) Any launch vehicle apogee used in the analysis;

(f) Each populated area located within a flight corridor or impact dispersion area;

(g) The estimated casualty expectancy calculated for each populated area within a flight corridor or impact dispersion area;

(h) The effective casualty areas used in the analysis;

(i) The estimated casualty expectancy for each flight corridor or set of impact dispersion areas; and

(j) If populated areas are located within an overflight exclusion zone, a demonstration that there are times when the public is not present or that the applicant has an agreement in place to evacuate the public from the overflight exclusion zone during a launch.

§ 420.29 Launch site location review for unproven launch vehicles.

An applicant for a license to operate a launch site for an unproven launch vehicle shall provide a clear and convincing demonstration that its proposed launch site location provides an equivalent level of safety to that required by this part.

§ 420.31 Agreements.

(a) Except as provided by paragraph (c) of this section, an applicant shall complete an agreement with the local U.S. Coast Guard district to establish procedures for the issuance of a Notice to Mariners prior to a launch and other such measures as the Coast Guard deems necessary to protect public health and safety.

(b) Except as provided by paragraph (c) of this section, an applicant shall complete an agreement with the FAA Air Traffic Control (ATC) office having jurisdiction over the airspace through which launches will take place, to establish procedures for the issuance of a Notice to Airmen prior to a launch and for closing of air routes during the launch window and other such measures as the FAA ATC office deems necessary to protect public health and safety.

(c) An applicant that plans to operate a launch site located on a federal launch range does not have to comply with section 420.31 if the applicant is using existing federal launch range agreements with the U.S. Coast Guard and the FAA ATC office having jurisdiction over the airspace through which launches will take place.

§§ 420.32–420.40 [Reserved]

Subpart C—License Terms and Conditions

§ 420.41 License to operate a launch site—general.

(a) A license to operate a launch site authorizes a licensee to operate a launch site in accordance with the representations contained in the licensee's

application, with terms and conditions contained in any license order accompanying the license, and subject to the licensee's compliance with 49 U.S.C. subtitle IX, ch. 701 and this chapter.

(b) A license to operate a launch site authorizes a licensee to offer its launch site to a launch operator for each launch point for the type and any weight class of launch vehicle identified in the license application and upon which the licensing determination is based.

(c) Issuance of a license to operate a launch site does not relieve a licensee of its obligation to comply with any other laws or regulations; nor does it confer any proprietary, property, or exclusive right in the use of airspace or outer space.

§ 420.43 Duration.

A license to operate a launch site remains in effect for five years from the date of issuance unless surrendered, suspended, or revoked before the expiration of the term and is renewable upon application by the licensee.

§ 420.45 Transfer of a license to operate a launch site.

(a) Only the FAA may transfer a license to operate a launch site.

(b) The FAA will transfer a license to an applicant who has submitted an application in accordance with 14 CFR part 413, satisfied the requirements of § 420.15, and obtained each approval required by § 420.17 for a license.

(c) The FAA may incorporate by reference any findings made part of the record that supported a prior related licensing determination.

§ 420.47 License modification.

(a) Upon application or upon its own initiative, the FAA may modify a license to operate a launch site at any time by issuing a license order that adds, removes, or modifies a license term or condition to ensure compliance with the Act and the requirements of this chapter.

(b) After a license to operate a launch site has been issued, a licensee shall apply to the FAA for modification of its license if:

(1) The licensee proposes to operate the launch site in a manner that is not authorized by the license; or

(2) The licensee proposes to operate the launch site in a manner that would make any representation contained in the license application that is material to public health and safety or safety of property no longer accurate and complete.

(c) An application to modify a license shall be prepared and submitted in accordance with part 413 of this chapter. The licensee shall indicate any part of its license or license application that would be changed or affected by a proposed modification.

(d) The FAA approves a modification request that satisfies the requirements of this part.

(e) Upon approval of a license modification, the FAA issues either a written approval to the licensee or a license order modifying the license if a stated term or condition of the license is changed, added, or deleted. A written approval has the full force and effect of a license order and is part of the licensing record.

§ 420.49 Compliance monitoring.

A licensee shall allow access by and cooperate with federal officers or employees or other individuals authorized by the FAA to observe any activities of the licensee, its customers, its contractors, or subcontractors, associated with licensed operation of the licensee's launch site.

Subpart D—Responsibilities of a Licensee

§ 420.51 Responsibilities—general.

(a) A licensee shall operate its launch site in accordance with the representations in the application upon which the licensing determination is based.

(b) A licensee is responsible for compliance with 49 U.S.C. Subtitle IX, ch. 701 and for meeting the requirements of this chapter.

§ 420.53 Control of public access.

(a) A licensee shall prevent unauthorized access to the launch site, and unauthorized, unescorted access to explosive hazard facilities or other hazard areas not otherwise controlled by a

launch operator, through the use of security personnel, surveillance systems, physical barriers, or other means approved as part of the licensing process.

(b) A licensee shall notify anyone entering the launch site of safety rules and emergency and evacuation procedures prior to that person's entry unless that person has received a briefing on those rules and procedures within the previous year.

(c) A licensee shall employ warning signals or alarms to notify any persons at the launch site of any emergency.

§ 420.55 Scheduling of launch site operations.

(a) A licensee shall develop and implement procedures to schedule operations to ensure that each operation carried out by a customer at the launch site does not create the potential for a mishap that could result in harm to the public because of the proximity of the operations, in time or place, to operations of any other customer. A customer includes any launch operator, and any contractor, subcontractor or customer of the launch site operator's customer at the launch site.

(b) A licensee shall provide its launch site scheduling requirements to each customer before the customer begins operations at the launch site.

§ 420.57 Notifications.

(a) A licensee shall notify each launch operator and any other customer of any limitations on the use of the launch site. A licensee shall also communicate limitations on the use of facilities provided to customers by the launch site operator.

(b) A licensee shall maintain its agreement, made in accordance with § 420.31(a), with the local U.S. Coast Guard district.

(c) A licensee shall maintain its agreement, made in accordance with § 420.31(b), with the FAA ATC office having jurisdiction over the airspace through which launches will take place.

(d) At least two days prior to flight of a launch vehicle, the licensee shall notify local officials and all owners of land adjacent to the launch site of the flight schedule.

§ 420.59 Launch site accident investigation plan.

(a) *General.* A licensee shall develop and implement a launch site accident investigation plan that contains the licensee's procedures for reporting, responding to, and investigating launch site accidents, as defined by § 420.5, and for cooperating with federal officials in case of a launch accident. The launch site accident investigation plan must be signed by an individual authorized to sign and certify the application in accordance with § 413.7(c) of this chapter.

(b) *Reporting requirements.* A launch site accident investigation plan shall provide for—

(1) Immediate notification to the Federal Aviation Administration (FAA) Washington Operations Center in the event of a launch site accident.

(2) Submission of a written preliminary report to the FAA, Associate Administrator for Commercial Space Transportation, within five days of any launch site accident. The report must include the following information:

(i) Date and time of occurrence;

(ii) Location of the event;

(iii) Description of the event;

(iv) Number of injuries, if any, and general description of types of injuries suffered;

(v) Property damage, if any, and an estimate of its value;

(vi) Identification of hazardous materials, as defined by § 401.5 of this chapter, involved in the event;

(vii) Any action taken to contain the consequences of the event; and

(viii) Weather conditions at the time of the event.

(c) *Response plan.* A launch site accident investigation plan shall contain procedures that—

(1) Ensure the consequences of a launch site accident are contained and minimized;

(2) Ensure data and physical evidence are preserved;

(3) Require the licensee to report to and cooperate with FAA or National Transportation Safety Board (NTSB) investigations and designate one or more points of contact for the FAA or NTSB; and

(4) Require the licensee to identify and adopt preventive measures for avoiding recurrence of the event.

(d) *Investigation plan.* A launch site accident investigation plan must contain—

(1) Procedures for investigating the cause of a launch site accident;

(2) Procedures for reporting launch site accident investigation results to the FAA; and

(3) Delineated responsibilities, including reporting responsibilities for personnel assigned to conduct investigations and for any one retained by the licensee to conduct or participate in investigations.

(e) *Launch accidents.* A launch site accident investigation plan shall contain—

(1) Procedures for participating in an investigation of a launch accident for launches launched from the launch site;

(2) Require the licensee to cooperate with FAA or National Transportation Safety Board (NTSB) investigations of a launch accident for launches launched from the launch site.

(f) *Applicability of other accident investigation procedures.* Accident investigation procedures developed in accordance with 29 CFR 1910.119 and 40 CFR part 68 will satisfy the requirements of paragraphs (c) and (d) of this section to the extent that they include the elements required by paragraphs (c) and (d) of this section.

§ 420.61 Records.

(a) A licensee shall maintain all records, data, and other material needed to verify that its operations are conducted in accordance with representations contained in the licensee's application. A licensee shall retain records for three years.

(b) In the event of a launch or launch site accident, a licensee shall preserve all records related to the event. Records shall be retained until completion of any federal investigation and the FAA advises the licensee that the records need not be retained.

(c) A licensee shall make available to federal officials for inspection and copying all records required to be maintained under the regulations.

§ 420.63 Explosive siting.

(a) Except as otherwise provided by paragraph (b) of this section, a licensee shall ensure that the configuration of the launch site is in accordance with an explosive site plan, and that the licensee's explosive site plan is in compliance with the requirements of §§ 420.65—420.69. The explosive site plan shall include:

(1) A scaled map that shows the location of all proposed explosive hazard facilities at the proposed launch site and that shows actual and minimal allowable distances between each explosive hazard facility and all other explosive hazard facilities and each public area, including the launch site boundary;

(2) A listing of the maximum quantities of liquid and solid propellants and other explosives to be located at each explosive hazard facility, including the class and division for each solid explosive and the hazard and compatibility group for each liquid propellant; and

(3) A description of each activity to be conducted in each explosive hazard facility.

(b) A licensee operating a launch site located on a federal launch range does not have to comply with the requirements in §§ 420.65–420.69 if the licensee is in compliance with the federal launch range's explosive safety requirements.

(c) For explosive siting issues not otherwise addressed by the requirements of §§ 420.65–420.69, a launch site operator must clearly and convincingly demonstrate a level of safety equivalent to that otherwise required by part 420.

§ 420.65 Handling of solid propellants.

(a) A launch site operator shall determine the maximum total quantity of solid propellants and other solid explosives by class and division, in accordance with 49 CFR part 173, Subpart C, to be located in each explosive hazard facility where solid propellants or other solid explosives will be handled.

(b) When explosive divisions 1.1 and 1.3 explosives are located in the same explosive hazard facility, the total quantity of explosive shall be treated

as division 1.1 for quantity-distance determinations; or, a launch site operator may add the net explosive equivalent weight of the division 1.3 items to the net weight of division 1.1 items to determine the total quantity of explosives.

(c) A launch site operator shall separate each explosive hazard facility where solid propellants and other solid explosives are handled from all other explosive hazard facilities, each public area and the launch site boundary by a distance no less than those provided for each quantity and explosive division in appendix E, table E–1.

(d) A launch site operator shall follow the following separation rules:

(1) A launch site operator shall employ no less than the applicable public area distance to separate an explosive hazard facility from each public area and from the launch site boundary.

(2) A launch site operator shall employ no less than an intraline distance to separate an explosive hazard facility from all other explosive hazard facilities used by a single customer.

(3) For explosive division 1.1 only, a launch site operator may employ no less than 60% of the applicable public area distance, or the public traffic route distance, to separate an explosive hazard facility from a public area that consists only of a public highway or railroad line.

(4) A launch site operator may use linear interpolation for NEW quantities between table entries.

(5) A launch site operator shall measure separation distance from the closest debris or explosive hazard source in an explosive hazard facility.

§ 420.67 Storage or handling of liquid propellants.

(a) For an explosive hazard facility where liquid propellants are handled or stored, a launch site operator shall determine the total quantity of liquid propellant and, if applicable pursuant to paragraph (a)(3) of this section, the explosive equivalent of liquid propellant in each explosive hazard facility in accordance with the following:

(1) The quantity of liquid propellant in a tank, drum, cylinder, or other container is the net weight in pounds of the propellant in the container. The determination of quantity shall include any liquid propellant in associated piping to any point where positive means are provided for interrupting the flow through the pipe, or interrupting a reaction in the pipe in the event of a mishap.

(2) Where two or more containers of compatible liquid propellants are handled or stored together in an explosive hazard facility, the total quantity of propellant to determine the minimum separation distance between the explosive hazard facility and all other explosive hazard facilities and each public area shall be the total quantity of liquid propellant in all containers, unless:

(i) The containers are separated one from the other by the appropriate distance as provided by paragraph (b)(2) of this section; or

(ii) The containers are subdivided by intervening barriers, such as diking, that prevent mixing.

(iii) If paragraph (a)(2)(i) or (ii) of this section apply, a launch site operator shall use the quantity of propellant requiring the greatest separation distance pursuant to paragraph (b) of this section to determine the minimum separation distance between the explosive hazard facility and all other explosive hazard facilities and each public area.

(3) Where two or more containers of incompatible liquid propellants will be handled or stored together in an explosive hazard facility, a launch site operator shall determine the explosive equivalent in pounds of the combined liquids, using the formulas provided in appendix E, table E–2, to determine the minimum separation distance between the explosive hazard facility and other explosive hazard facilities and public areas unless the containers are separated one from the other by the appropriate distance as determined in paragraph (b)(3) of this section. A launch site operator shall then use the quantity of liquid propellant requiring the greatest separation distance to determine the minimum separation distance between the explosive hazard facility and all other explosive hazard facilities and each public area.

(4) A launch site operator shall convert quantities of liquid propellants

from gallons to pounds using the conversion factors provided in appendix E, table E–3 and the following equation:

Pounds of propellant = gallons × density of propellant (pounds per gallon).

(b) A launch site operator shall use appendix E, table E–3 to determine hazard and compatibility groups and shall separate liquid propellants from each other and from each public area using distances no less than those provided in appendix E, tables E–4 through E–7 in accordance with the following:

(1) A launch site operator shall measure minimum separation distances from the hazard source in an explosive hazard facility, such as a container, building, segment, or positive cutoff point in piping, closest to each explosive hazard facility.

(2) A launch site operator shall measure the minimum separation distance between compatible liquid propellants using the ''intragroup and compatible'' distance for the propellant quantity and hazard group that requires the greater distance prescribed by appendix E, tables E–4, E–5, and E–6.

(3) A launch site operator shall measure the minimum separation distance between liquid propellants of different compatibility groups using the ''public area and incompatible'' distance for the propellant quantity and hazard group that requires the greater distance provided in appendix E, tables E–4, E–5, and E–6, unless the propellants of different compatibility groups are subdivided by intervening barriers that prevent mixing. If such barriers are present, the minimum separation distance shall be the ''intragroup and compatible'' distance for the propellant quantity and group that requires the greater distance provided in appendix E, tables E–4, E–5, and E–6.

(4) A launch site operator shall separate liquid propellants from each public area using a distance no less than the ''public area and incompatible'' distance provided in appendix E, tables E–4, E–5, and E–6.

(5) A launch site operator shall separate each explosive hazard facility that contains liquid propellants where explosive equivalents apply pursuant to paragraph (a)(3) of this section from all other explosive hazard facilities of a single customer using the intraline distance provided in appendix E, table E–7, and from each public area using the public area distance provided in appendix E, table E–7.

§ 420.69 Solid and liquid propellants located together.

(a) A launch site operator proposing an explosive hazard facility where solid and liquid propellants are to be located together shall determine the minimum separation distances between the explosive hazard facility and other explosive hazard facilities and public areas in accordance with one method provided in paragraphs (b), (c), or (d) of this section.

(b) A launch site operator shall determine the minimum separation distances between the explosive hazard facility and all other explosive hazard facilities and public areas required for the liquid propellants in accordance with section 420.67(b)(5), and add the minimum separation distances between the explosive hazard facility and all other explosive hazard facilities and public areas required for the solid propellants in accordance with section 420.65, treating the solid propellants as explosive division 1.1.

(c) A launch site operator shall determine the minimum separation distances between the explosive hazard facility and all other explosive hazard facilities and public areas required for the liquid propellants in accordance with section 420.67(b)(5), and add the minimum separation distances between the explosive hazard facility and all other explosive hazard facilities and public areas required for the solid propellants in accordance with section 420.65, using the explosive equivalent of the explosive division 1.3.

(d) A launch site operator shall conduct an analysis of the maximum credible event (MCE), or the worst case explosion that is expected to occur. If the MCE shows that there will be no simultaneous explosion reaction of the liquid propellant tanks and the solid propellant motors, then the minimum distance between the explosive hazard facility and all other explosive hazard facilities and public areas must be based on the MCE.

§ 420.71 Lightning protection.

(a) *Lightning protection.* A licensee shall ensure that the public is not exposed to hazards due to the initiation of explosives by lightning.

(1) *Elements of a lighting protection system.* Unless an explosive hazard facility meets the conditions of paragraph (a)(3) of this section, all explosive hazard facilities shall have a lightning protection system to ensure explosives are not initiated by lightning. A lightning protection system shall meet the requirements of this paragraph and include the following:

(i) *Air terminal.* An air terminal to intentionally attract a lightning strike.

(ii) *Down conductor.* A low impedance path connecting an air terminal to an earth electrode system.

(iii) *Earth electrode system.* An earth electrode system to dissipate the current from a lightning strike to ground.

(2) *Bonding and surge protection.* A lightning protection system must meet the requirements of this paragraph and include the following:

(i) *Bonding.* All metallic bodies shall be bonded to ensure that voltage potentials due to lightning are equal everywhere in the explosive hazard facility. Any fence within six feet of a lightning protection system shall have a bond across each gate and other discontinuations and shall be bonded to the lightning protection system. Railroad tracks that run within six feet of the lightning protection system shall be bonded to the lightning protection system.

(ii) *Surge protection.* A lightning protection system shall include surge protection to reduce transient voltages due to lightning to a harmless level for all metallic power, communication, and instrumentation lines entering an explosive hazard facility.

(3) *Circumstances where no lightening protection system is required.* No lightning protection system is required for an explosive hazard facility when a lightning warning system is available to permit termination of operations and withdrawal of the public to public area distance prior to an electrical storm, or for an explosive hazard facility containing explosives that cannot be initiated by lightning. If no lightning protection system is required, a licensee must ensure the withdrawal of the public to a public area distance prior to an electrical storm.

(4) *Testing and inspection.* Lightning protection systems shall be visually inspected semiannually and shall be tested once each year for electrical continuity and adequacy of grounding. A licensee shall maintain at the explosive hazard facility a record of results obtained from the tests, including any action taken to correct deficiencies noted.

(b) *Electrical power lines.* A licensee shall ensure that electric power lines at its launch site meet the following requirements:

(1) Electric power lines shall be no closer to an explosive hazard facility than the length of the lines between the poles or towers that support the lines unless an effective means is provided to ensure that energized lines cannot, on breaking, come in contact with the explosive hazard facility.

(2) Towers or poles supporting electrical distribution lines that carry between 15 and 69 KV, and unmanned electrical substations shall be no closer to an explosive hazard facility than the public area distance for that explosive hazard facility.

(3) Towers or poles supporting electrical transmission lines that carry 69 KV or more, shall be no closer to an explosive hazard facility than the public area distance for that explosive hazard facility.

APPENDIX A TO PART 420—METHOD FOR DEFINING A FLIGHT CORRIDOR

(a) Introduction

(1) This appendix provides a method for constructing a flight corridor from a launch point for a guided suborbital launch vehicle or any one of the four classes of guided orbital launch vehicles from table 1, § 420.19, without the use of local meteorological data or a launch vehicle trajectory.

(2) A flight corridor includes an overflight exclusion zone in a launch area and, for a guided suborbital launch vehicle, an impact dispersion area in a downrange area. A flight corridor for a guided suborbital launch vehicle ends with the impact dispersion area, and, for the four classes of guided orbital launch vehicles, 5000 nautical miles (nm) from the launch point.

(b) Data requirements

(1) Maps. An applicant shall use any map for the launch site region with a scale not less than 1:250,000 inches per inch in the launch area and 1:20,000,000 inches per inch in the downrange area. As described in paragraph (b)(2), an applicant shall use a mechanical method, a semi-automated method, or a fully-automated method to plot a flight corridor on maps. A source for paper maps acceptable to the FAA is the U.S. Dept. of Commerce, National Oceanic and Atmospheric Administration, National Ocean Service.

(i) Projections for mechanical plotting method. An applicant shall use a conic projection. The FAA will accept a ''Lambert-Conformal'' conic projection. A polar aspect of a plane-azimuthal projection may also be used for far northern launch sites.

(ii) Projections for semi-automated plotting method. An applicant shall use cylindrical, conic, or plane projections for semi-automated plotting. The FAA will accept ''Mercator'' and ''Oblique Mercator'' cylindrical projections. The FAA will accept ''Lambert-Conformal'' and ''Albers Equal-Area'' conic projections. The FAA will accept ''Lambert Azimuthal Equal-Area'' and ''Azimuthal Equidistant'' plane projections.

(iii) Projections for fully-automated plotting method. The FAA will accept map projections used by geographical information system software scaleable pursuant to the requirements of paragraph (b)(1).

(2) Plotting Methods.

(i) Mechanical method. An applicant may use mechanical drafting equipment such as pencil, straight edge, ruler, protractor, and compass to plot the location of a flight corridor on a map. The FAA will accept straight lines for distances less than or equal to 7.5 times the map scale on map scales greater than or equal to 1:1,000,000 inches per inch (in/in); or straight lines representing 100 nm or less on map scales less than 1:1,000,000 in/in.

(ii) Semi-automated method. An applicant may employ the range and bearing techniques in paragraph (b)(3) to create latitude and longitude points on a map. The FAA will accept straight lines for distances less than or equal to 7.5 times the map scale on map scales greater than or equal to 1:1,000,000 inches per inch (in/in); or straight lines representing 100 nm or less on map scales less than 1:1,000,000 in/in.

(iii) Fully-automated method. An applicant may use geographical information system software with global mapping data scaleable in accordance with paragraph (b)(1).

(3) Range and bearing computations on an ellipsoidal Earth model.

(i) To create latitude and longitude pairs on an ellipsoidal Earth model, an applicant shall use the following equations to calculate geodetic latitude (+N) and longitude (+E) given the launch point geodetic latitude (+N), longitude (+E), range (nm), and bearing (degrees, positive clockwise from North).

(A) Input. An applicant shall use the following input in making range and bearing computations. Angle units must be in radians.

$$\phi_1 = \text{Geodetic latitude of launch point (radians)}$$

$$= \phi_1\,(\text{DDD}) \cdot \frac{\pi}{180}\ \text{(radians per degree)}$$

$$\lambda_1 = \text{Longitude of launch point (DDD)}$$

$$= \lambda\,(\text{DDD}) \cdot \frac{\pi}{180}\ \text{(radians per degree)}$$

$$S = \text{Range from launch point (nm)}$$

$$= S\,(\text{DDD}) \cdot \frac{\pi}{180}\ \text{(radians per degree)}$$

$$\alpha_{12} = \text{Azimuth bearing from launch point (deg)}$$

$$= \alpha_{12}(\text{DDD}) \cdot \frac{\pi}{180}\ \text{(radians per degree)}$$

(B) Computations. An applicant shall use the following equations to determine the latitude (φ_2) and longitude (λ_2) of a target

point situated ''S'' nm from the launch point on an azimuth bearing (α_{12}) degrees.

$$f = 1 - \frac{b}{a} \qquad \text{(Equation A1)}$$

where:

a = WGS–84 semi-major axis (3443.91846652 nmi)

b = WGS–84 semi-minor axis (3432.37165994 nmi)

$$\varepsilon^2 = \frac{\left(a^2 - b^2\right)}{b^2} \qquad \text{(Equation A2)}$$

$$\theta = \frac{S}{b} \text{ (radians)} \qquad \text{(Equation A3)}$$

$$\beta_1 = \tan^{-1}\left[\frac{\left(b \cdot \sin\phi_1\right)}{\left(a \cdot \cos\phi_1\right)}\right] \qquad \text{(Equation A4)}$$

$$g = \left(\cos\beta_1\right)\left(\cos\alpha_{12}\right) \qquad \text{(Equation A5)}$$

$$h = \left(\cos\beta_1\right)\left(\sin\alpha_{12}\right) \qquad \text{(Equation A6)}$$

$$m = \frac{\left[1 + \left(\frac{\varepsilon^2}{2}\right)\sin^2\beta_1\right]\left[1 - h^2\right]}{2} \qquad \text{(Equation A7)}$$

$$n = \frac{\left[1 + \left(\frac{\varepsilon^2}{2}\right)\sin^2\beta_1\right]\left[\left(\sin^2\beta_1\right)\left(\cos\theta\right) + g \cdot \left(\sin\beta_1\right)\left(\sin\theta\right)\right]}{2} \qquad \text{(Equation A8)}$$

$$L = h \cdot \left[-f \cdot \theta + 3 \cdot f^2 \cdot n \cdot \sin\theta + \frac{3 \cdot f^2 \cdot m \cdot (\theta - \sin\theta \cdot \cos\theta)}{2}\right] \text{(radians)} \qquad \text{(Equation A9)}$$

$$M = m \cdot \varepsilon^2 \qquad \text{(Equation A10)}$$

$$N = n \cdot \varepsilon^2 \qquad \text{(Equation A11)}$$

$$A_1 = N \cdot \sin\theta \qquad \text{(Equation A12)}$$

$$A_2 = \left(\frac{M}{2}\right)\left(\sin\theta \cdot \cos\theta - \theta\right) \qquad \text{(Equation A13)}$$

$$A_3 = \left(\frac{5}{2}\right)\left(N^2 \cdot \sin\theta \cdot \cos\theta\right) \qquad \text{(Equation A14)}$$

$$A_4 = \left(\frac{M^2}{16}\right)\left(11 \cdot \theta - 13 \cdot \sin\theta \cdot \cos\theta - 8 \cdot \theta \cdot \cos^2\theta + 10 \cdot \sin\theta \cdot \cos^3\theta\right) \qquad \text{(Equation A15)}$$

$$A_5 = \left(\frac{M \cdot N}{2}\right)\left(3 \cdot \sin\theta + 2 \cdot \theta \cdot \cos\theta - 5 \cdot \sin\theta \cdot \cos^2\theta\right) \qquad \text{(Equation A16)}$$

$$\delta = \theta - A_1 + A_2 + A_3 + A_4 + XA_5 (\text{radians}) \qquad \text{(Equation A17)}$$

$$\sin\beta_2 = \sin\beta_1 \cdot \cos\delta + g \cdot \sin\delta \qquad \text{(Equation A18)}$$

$$\cos\beta_2 = \left[h^2 + \left(g \cdot \cos\delta - \sin\beta_1 \cdot \sin\delta\right)^2\right]^{\frac{1}{2}} \qquad \text{(Equation A19)}$$

$$\phi_2 = \left\{\tan^{-1}\left[\frac{(a \cdot \sin\beta_2)}{(b \cdot \cos\beta_2)}\right]\right\} \cdot \left(\frac{180}{\pi}\right)(\text{geodetic latitude of target point, DDD}) \qquad \text{(Equation A20)}$$

$$\Lambda = \tan^{-1}\left[\frac{(\sin\delta \cdot \sin\alpha_{12})}{(\cos\beta_1 \cdot \cos\delta - \sin\beta_1 \cdot \sin\delta \cdot \cos\alpha_{12})}\right] \qquad \text{(Equation A21)}$$

$$\lambda_2 = (\lambda_1 + \Lambda + L)\left(\frac{180}{\pi}\right)(\text{longitude of target point, DDD}) \qquad \text{(Equation A22)}$$

(ii) To create latitude and longitude pairs on an ellipsoidal Earth model, an applicant shall use the following equations to calculate the distance (S) of the geodesic between two points (P_1 and P_2), the forward azimuth (α_{12}) of the geodesic at P_1, and the back azimuth (α_{21}) of the geodesic at P_2, given the geodetic latitude (+N), longitude (+E) of P_1 and P_2. Azimuth is measured positively clockwise from North.

(A) Input. An applicant shall use the following input. Units must be in radians.

$$\begin{aligned}
\phi_1 &= \text{Geodetic latitude of launch point (radians)} \\
&= \phi_1(\text{DDD}) \cdot \frac{\pi}{180}(\text{radians per degree}) \\
\lambda_1 &= \text{Longitude of launch point (DDD)} \\
&= \lambda_1(\text{DDD}) \cdot \frac{\pi}{180}(\text{radians per degree}) \\
S &= \text{Range from launch point (nm)} \\
&= S(\text{DDD}) \cdot \frac{\pi}{180}(\text{radians per degree}) \\
\alpha_{12} &= \text{Azimuth bearing from launch point (deg)} \\
&= \alpha_{12}(\text{DDD}) \cdot \frac{\pi}{180}(\text{radians per degree})
\end{aligned}$$

(B) Computations. An applicant shall use the following equations to determine the distance (S), the forward azimuth (α_{12}) of the geodesic at P_1, and the back azimuth (α_{12}) of the geodesic at P_2.

$$f = 1 - \frac{b}{a} \qquad \text{(Equation A23)}$$

where:

a = WGS–84 semi-major axis (3443.91846652 nmi)

b = WGS–84 semi-minor axis (3432.37165994 nmi)

$$L = \lambda_2 - \lambda_1 \qquad \text{(Equation A24)}$$

$$\beta_1 = \tan^{-1}\left[\frac{(b \cdot \sin\phi_1)}{\alpha \cdot \cos\phi_1}\right] \qquad \text{(Equation A25)}$$

$$\beta_2 = \tan^{-1}\left[\frac{(b \cdot \sin\phi_2)}{\alpha \cdot \cos\phi_2}\right] \qquad \text{(Equation A26)}$$

$$A = \sin\beta_1 \cdot \sin\beta_2 \qquad \text{(Equation A27)}$$

$$B = \cos\beta_1 \cdot \cos\beta_2 \qquad \text{(Equation A28)}$$

$$\cos\delta = A + B \cdot \cos L \qquad \text{(Equation A29)}$$

$$n = \frac{(a-b)}{(a+b)} \qquad \text{(Equation A30)}$$

$$(\beta_2 - \beta_1) = (\phi_2 - \phi_1) + 2 \cdot \left\lfloor A \cdot \left(n + n^2 + n^3\right) - B \cdot \left(n - n^2 + n^3\right)\right\rfloor \cdot \sin(\phi_2 - \phi_1)\,\text{radians} \qquad \text{(Equation A31)}$$

$$\sin\delta = \left\{(\sin L \cdot \cos\beta_2)^2 + \left[\sin(\beta_2 - \beta_1) + 2 \cdot \cos\beta_2 \cdot \sin\beta_1 \cdot \sin^2(L/2)\right]^2\right\}^{\frac{1}{2}} \qquad \text{(Equation A32)}$$

$$\delta = \tan^{-1}\left(\frac{\sin\delta}{\cos\delta}\right)\text{evaluated in positive radians} \le \pi \qquad \text{(Equation A33)}$$

$$c = \frac{B \cdot \sin L}{\sin\delta} \qquad \text{(Equation A34)}$$

$$m = 1 - c^2 \qquad \text{(Equation A35)}$$

$$S = b \cdot \left\{ \begin{array}{l} \delta \cdot \left[1 + f + f^2\right] + A \cdot \left[\left(f + f^2\right) \cdot \sin\delta - \left(f^2 \cdot \delta^2\right)/(2 \cdot \sin\delta)\right] \\ -(m/2)\left[\left(f + f^2\right)(\delta + \sin\delta \cdot \cos\delta) - \left(f^2 \cdot \delta^2\right)/(\tan\delta)\right] \\ -\left(A^2 \cdot f^2/2\right) \cdot \sin\delta \cdot \cos\delta \\ +\left(f^2 \cdot m^2/16\right)\left[\delta + \sin\delta \cdot \cos\delta - 2 \cdot \sin\delta \cdot \cos^3\delta - 8\delta^2/(\tan\delta)\right] \\ +\left(A^2 \cdot m \cdot f^2/2\right)\left[\sin\delta \cdot \cos^2 + \delta + \delta^2/(\sin\delta)\right] \text{ in the same units as "a" and "b"} \end{array} \right\} \quad \text{(Equation A36)}$$

$$\Lambda = L + c \cdot \left\{ \begin{array}{l} \delta \cdot \left(f + f^2\right) - \left(A \cdot f^2/2\right)\left[\sin\delta + 2\delta^2/(\sin\delta)\right] \\ +\left(m \cdot f^2/4\right)\left[\sin\delta\cos\delta - 5\delta + 4\delta^2/(\tan\delta)\right] \end{array} \right\} \text{radians} \quad \text{(Equation A37)}$$

$$\alpha_{12} = \tan^{-1}\left\{ \frac{(\cos\beta_2 \cdot \sin\Lambda)}{\left[\sin(\beta_2 - \beta_1) + 2 \cdot \cos\beta_2 \cdot \sin\beta_1 \cdot \sin^2(\Lambda/2)\right]} \right\} \cdot \left(\frac{180}{\pi}\right) \text{degrees} \quad \text{(Equation A38)}$$

$$\alpha_{21} = \tan^{-1}\left\{ \frac{(-\cos\beta_1 \cdot \sin\Lambda)}{\left[2 \cdot \cos\beta_1 \cdot \sin\beta_2 \cdot \sin^2(\Lambda/2) - \sin(\beta_2 - \beta_1)\right]} \right\} \cdot \left(\frac{180}{\pi}\right) \text{degrees} \quad \text{(Equation A39)}$$

(c) Creation of a Flight Corridor

(1) To define a flight corridor, an applicant shall:

(i) Select a guided suborbital or orbital launch vehicle, and, for an orbital launch vehicle, select from table 1 of §420.19 a launch vehicle weight class that best represents the launch vehicle the applicant plans to support at its launch point;

(ii) Select a debris dispersion radius (D_{max}) from table A–1 corresponding to the guided suborbital launch vehicle or orbital launch vehicle class selected in paragraph (c)(1)(i);

(iii) Select a launch point geodetic latitude and longitude; and

(iv) Select a flight azimuth.

(2) An applicant shall define and map an overflight exclusion zone using the following method:

(i) Select a debris dispersion radius (D_{max}) from table A–1 and a downrange distance (D_{OEZ}) from table A–2 to define an overflight exclusion zone for the guided suborbital launch vehicle or orbital launch vehicle class selected in paragraph (c)(1)(i).

(ii) An overflight exclusion zone is described by the intersection of the following boundaries, which are depicted in figure A–1:

(A) An applicant shall define an uprange boundary with a half-circle arc of radius D_{max} and a chord of length twice D_{max} connecting the half-circle arc endpoints. The uprange boundary placement on a map has the chord midpoint positioned on the launch point with the chord oriented along an azimuth ±90°from the launch azimuth and the half-circle arc located uprange from the launch point.

(B) An applicant shall define the downrange boundary with a half-circle arc of radius D_{max} and a chord of length twice D_{max} connecting the half-circle arc endpoints. The downrange boundary placement on a map has the chord midpoint intersecting the nominal flight azimuth line at a distance D_{OEZ} inches downrange with the chord oriented along an azimuth ±90°from the launch azimuth and the half-circle arc located downrange from the intersection of the chord and the flight azimuth line.

(C) Crossrange boundaries of an overflight exclusion zone are defined by two lines segments. Each is parallel to the flight azimuth with one to the left side and one to the right side of the flight azimuth line. Each line connects an uprange half-circle arc endpoint to a downrange half-circle arc endpoint as shown in figure A–1.

(iii) An applicant shall identify the overflight exclusion zone on a map that meets the requirements of paragraph (b).

(3) An applicant shall define and map a flight corridor using the following method:

(i) In accordance with paragraph (b), an applicant shall draw a flight corridor on one or more maps with the D_{max} origin centered on the intended launch point and the flight corridor centerline (in the downrange direction) aligned with the initial flight azimuth. The flight corridor is depicted in figure A–2 and its line segment lengths are tabulated in table A–3.

(ii) An applicant shall define the flight corridor using the following boundary definitions:

(A) An applicant shall draw an uprange boundary, which is defined by an arc-line GB (figure A–2), directly uprange from and centered on the intended launch point with radius D_{max}.

(B) An applicant shall draw line CF perpendicular to and centered on the flight azimuth line, and positioned 10 nm downrange from the launch point. The applicant shall use the length of line CF provided in table A–3 corresponding to the guided suborbital launch vehicle or orbital launch vehicle class selected in paragraph (c)(1)(i).

(C) An applicant shall draw line DE perpendicular to and centered on the flight azimuth line, and positioned 100 nm downrange from the launch point. The applicant shall use the length of line DE provided in table A–3 corresponding to the guided suborbital launch vehicle or orbital launch vehicle class selected in paragraph (c)(1)(i).

(D) Except for a guided suborbital launch vehicle, an applicant shall draw a downrange boundary, which is defined by line HI and is drawn perpendicular to and centered on the flight azimuth line, and positioned 5,000 nm downrange from the launch point. The applicant shall use the length of line HI provided in table A–3 corresponding to the orbital launch vehicle class selected in paragraph (c)(1)(i).

(E) An applicant shall draw crossrange boundaries, which are defined by three lines on the left side and three lines on the right side of the flight azimuth. An applicant shall construct the left flight corridor boundary according to the following, and as depicted in figure A–3 :

(1) The first line (line BC in figure A–3) is tangent to the uprange boundary arc, and ends at endpoint C of line CF, as depicted in figure A–3;

(2) The second line (line CD in figure A–3) begins at endpoint C of line BC and ends at endpoint D of line DH, as depicted in figure A–3;

(3) For all orbital launch vehicles, the third line (line DH in figure A–3) begins at endpoint D of line CD and ends at endpoint H of line HI, as depicted in figure A–3; and

(4) For a guided suborbital launch vehicle, the line DH begins at endpoint D of line CD and ends at a point tangent to the impact dispersion area drawn in accordance with paragraph (c)(4) and as depicted in figure A–4.

(F) An applicant shall repeat the procedure in paragraph (c)(3)(ii)(E) for the right side boundary.

(iii) An applicant shall identify the flight corridor on a map that meets the requirements of paragraph (b).

(4) For a guided suborbital launch vehicle, an applicant shall define a final stage impact dispersion area as part of the flight corridor and show the impact dispersion area on a map, as depicted in figure A–4, in accordance with the following:

(i) An applicant shall select an apogee altitude (H_{ap}) for the launch vehicle final stage. The apogee altitude should equal the highest altitude intended to be reached by a guided suborbital launch vehicle launched from the launch point.

(ii) An applicant shall define the impact dispersion area by using an impact range factor [$IP(H_{ap})$] and a dispersion factor [$DISP(H_{ap})$] as shown below:

(A) An applicant shall calculate the impact range (D) for the final launch vehicle stage. An applicant shall set D equal to the maximum apogee altitude (H_{ap}) multiplied by the impact range factor as shown below:

$$D = H_{ap} \cdot IP\left(H_{ap}\right) \qquad \text{(Equation A40)}$$

where: $IP(H_{ap})$ = 0.4 for an apogee less than 100 km; and $IP(H_{ap})$ = 0.7 for an apogee 100 km or greater.

(B) An applicant shall calculate the impact dispersion radius (R) for the final launch vehicle stage. An applicant shall set R equal to the maximum apogee altitude (H_{ap}) multiplied by the dispersion factor as shown below:

$$R = H_{ap} \cdot DISP\left(H_{ap}\right) \qquad \text{(Equation A41)}$$

where: $DISP(H_{ap})$ = 0.05

(iii) An applicant shall draw the impact dispersion area on a map with its center on the predicted impact point. An applicant shall then draw line DH in accordance with paragraph (c)(3)(ii)(E)(4).

(d) Evaluate the Flight Corridor

(1) An applicant shall evaluate the flight corridor for the presence of any populated areas. If an applicant determines that no populated area is located within the flight corridor, then no additional steps are necessary.

(2) If a populated area is located in an overflight exclusion zone, an applicant may modify its proposal or demonstrate that there are times when no people are present or that the applicant has an agreement in place to evacuate the public from the overflight exclusion zone during a launch.

(3) If a populated area is located within the flight corridor, an applicant may modify its proposal and create another flight corridor pursuant to appendix A, use appendix B to narrow the flight corridor, or complete a risk analysis in accordance with appendix C.

TABLE A–1—DEBRIS DISPERSION RADIUS (D_{max}) (IN)

Orbital launch vehicles				Suborbital launch vehicles
Small	Medium	Medium large	Large	Guided
87,600 (1.20 nm)	111,600 (1.53 nm)	127,200 (1.74 nm)	156,000 (2.14 nm)	96,000 (1.32 nm)

TABLE A–2—OVERFLIGHT EXCLUSION ZONE DOWNRANGE DISTANCE (D_{oez}) (IN)

Orbital launch vehicles				Suborbital launch vehicles
Small	Medium	Medium large	Large	Guided
240,500 (3.30 nm)	253,000 (3.47 nm)	310,300 (4.26 nm)	937,700 (12.86 nm)	232,100 (3.18 nm)

Table A-3: Flight Corridor Line Segment Lengths

D_{max} (in)		Line Segment Lengths (x 10^6 inches)		
Orbital Launch Vehicles		$\overline{CF}$	$\overline{DE}$	$\overline{HI}$
Small	87600 (1.20 nm)	2.87620 (39.45 nm)	8.59452 (117.87 nm)	128.566 (1763.27 nm)
Medium	111,600 (1.53 nm)	2.97220 (40.76 nm)	8.64252 (118.53 nm)	128.566 (1763.27 nm)
Med-Large	127,200 (1.74 nm)	3.03460 (41.62 nm)	8.67372 (118.96 nm)	128.566 (1763.27 nm)
Large	156,000 (2.14 nm)	3.14979 (43.20 nm)	8.73131 (119.75 nm)	128.566 (1763.27 nm)
Suborbital Launch Vehicles		$\overline{CF}$	$\overline{DE}$	$\overline{HI}$
Guided	96,000 (1.32 nm)	2.90980 (39.91 nm)	8.61132 (118.10 nm)	N/A

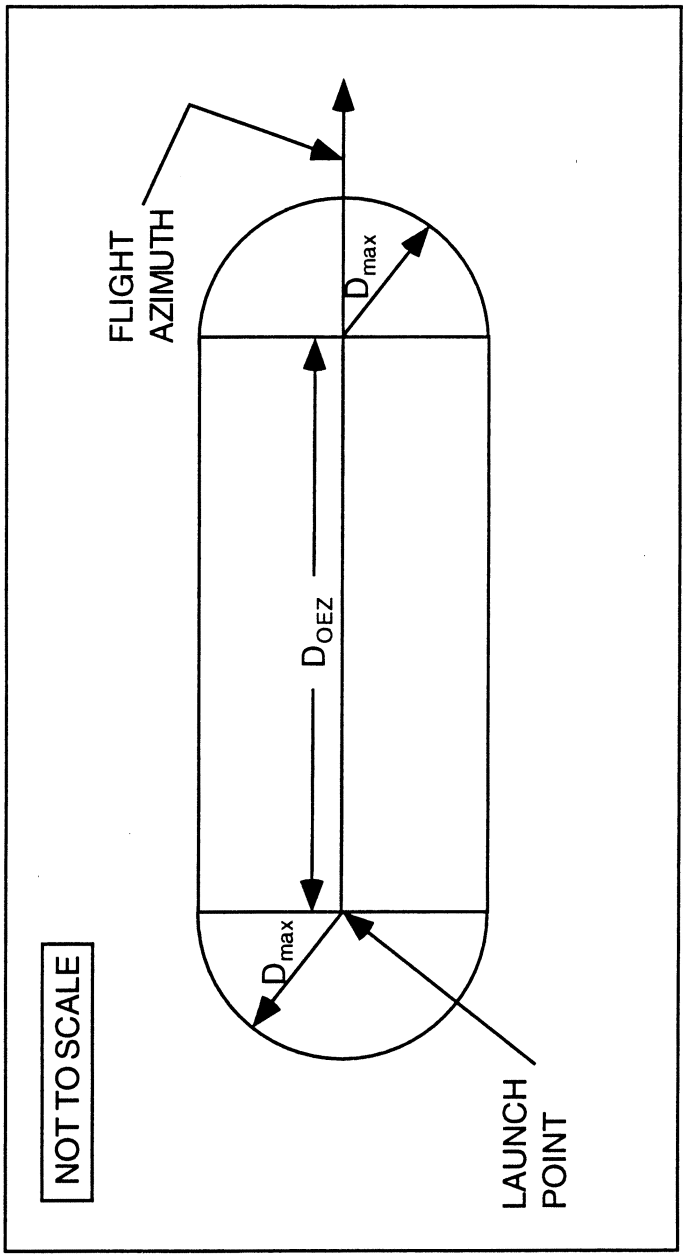

Figure A-1
Overflight Exclusion Zone

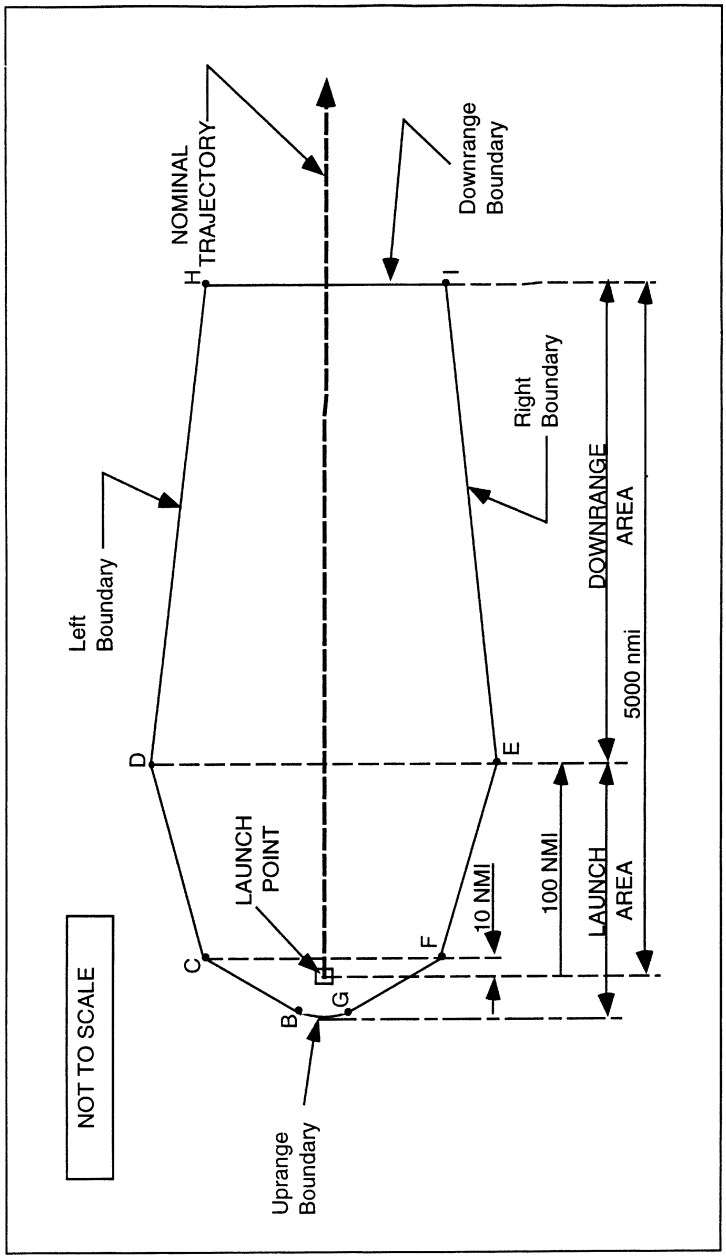

Figure A-2
Flight Corridor

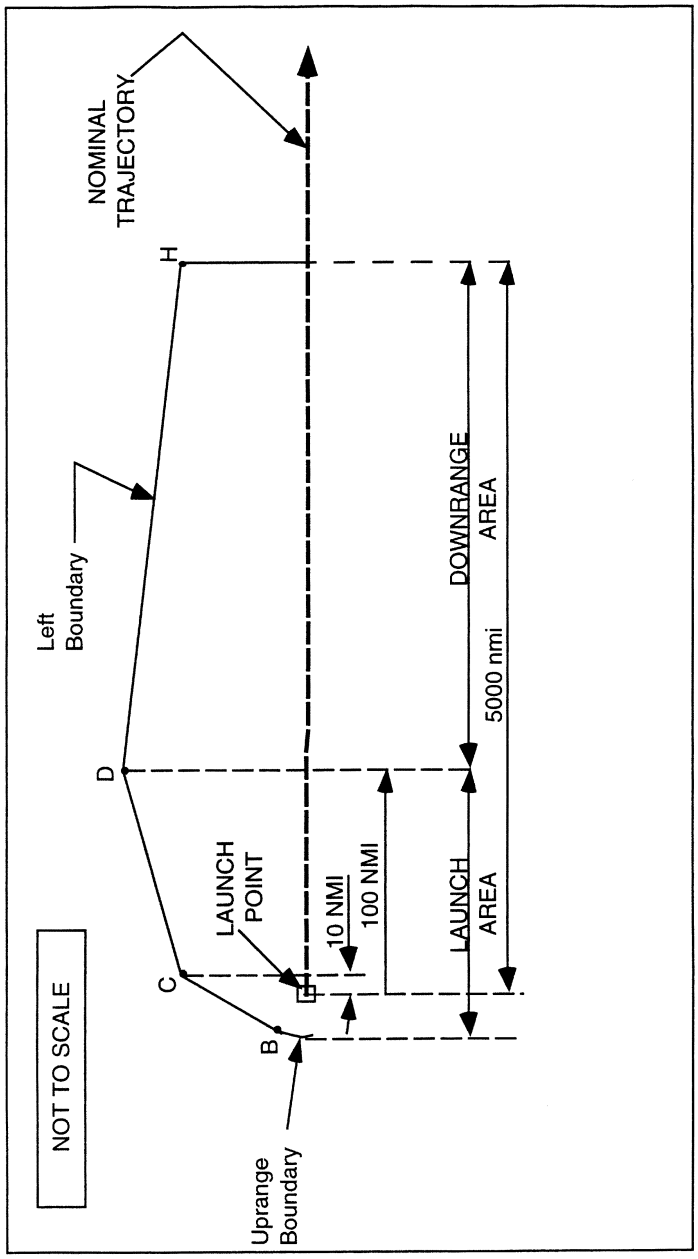

Figure A-3
Construction of Left Boundary of Flight Corridor

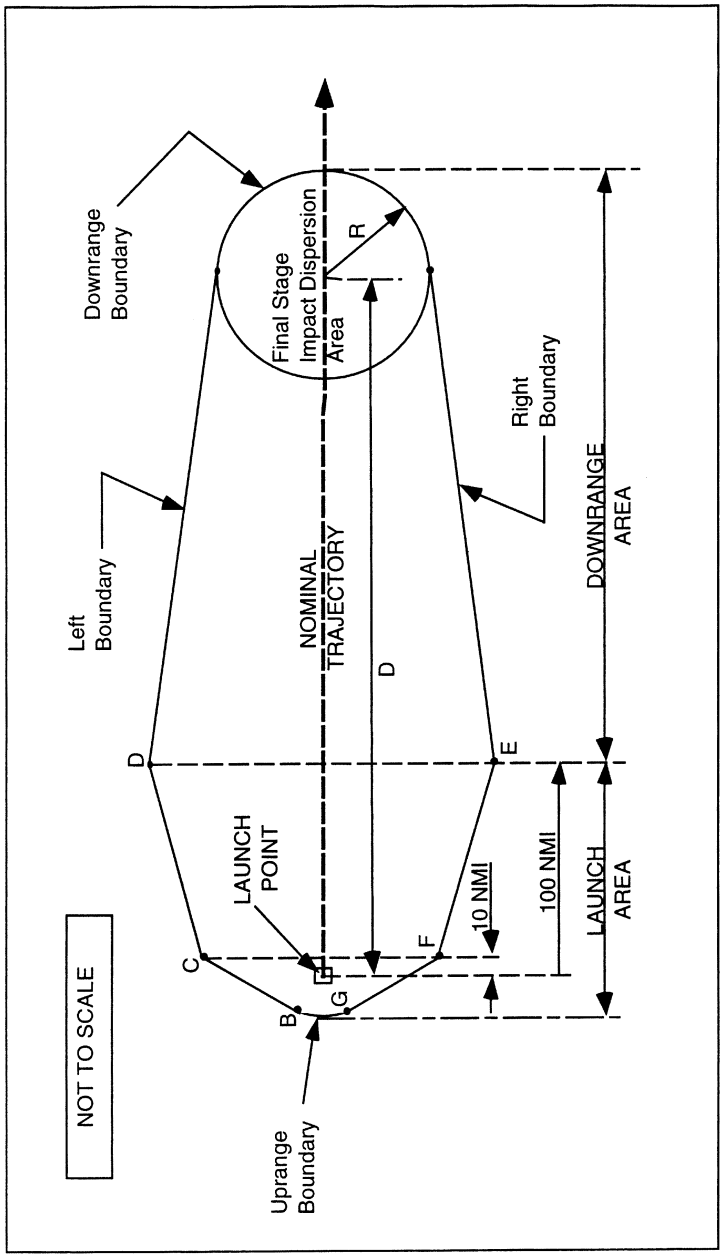

Figure A-4
Flight Corridor for Guided Sub-Orbital Launch Vehicles

APPENDIX B TO PART 420—METHOD FOR DEFINING A FLIGHT CORRIDOR

(a) Introduction

(1) This appendix provides a method to construct a flight corridor from a launch point for a guided suborbital launch vehicle or any one of the four weight classes of guided orbital launch vehicles from table 1, § 420.19, using local meteorological data and a launch vehicle trajectory.

(2) A flight corridor is constructed in two sections—one section comprising a launch area and one section comprising a downrange area. The launch area of a flight corridor reflects the extent of launch vehicle debris impacts in the event of a launch vehicle failure and applying local meteorological conditions. The downrange area reflects the extent of launch vehicle debris impacts in the event of a launch vehicle failure and applying vehicle imparted velocity, malfunctions turns, and vehicle guidance and performance dispersions.

(3) A flight corridor includes an overflight exclusion zone in the launch area and, for a guided suborbital launch vehicle, an impact dispersion area in the downrange area. A flight corridor for a guided suborbital launch vehicle ends with an impact dispersion area and, for the four classes of guided orbital launch vehicles, 5,000 nautical miles (nm) from the launch point, or where the IIP leaves the surface of the Earth, whichever is shorter.

(b) Data Requirements

(1) Launch area data requirements. An applicant shall satisfy the following data requirements to perform the launch area analysis of this appendix. The data requirements are identified in table B–1 along with sources where data acceptable to the FAA may be obtained.

(i) An applicant must select meteorological data that meet the specifications in table B–1 for the proposed launch site.

TABLE B–1—LAUNCH AREA DATA REQUIREMENTS

Data category	Data item	Data source
Meteorological Data	Local statistical wind data as a function of altitude up to 50,000 feet. Required data include: altitude (ft), atmospheric density (slugs/ft^3), mean East/West meridianal (u) and North/South zonal (v) wind (ft/sec), standard deviation of u and v wind (ft/sec), correlation coefficient, number of observations and wind percentile (%).	These data may be obtained from: Global Gridded Upper Air Statistics, Climate Applications Branch National Climatic Data Center.
Nominal Trajectory Data	State vector data as function of time after liftoff in topocentric launch point centered X,Y,Z,X,Y,Z coordinates with the X-axis aligned with the flight azimuth. Trajectory time intervals shall not be greater than one second. XYZ units are in feet and X,Y,Z units are in ft/sec.	Actual launch vehicle trajectory data; or trajectory generation software that meets the requirements of paragraph (b)(1)(ii).
Debris Data	A fixed ballistic coefficient equal to 3 lbs/ft^2 is used for the launch area.	N/A.
Geographical Data	Launch point geodetic latitude on a WGS–84 ellipsoidal Earth model.	Geographical surveys or Global Positioning System.
	Launch point longitude on an ellipsoidal Earth model.	
	Maps using scales of not less than 1:250,000 inches per inch within 100 nm of a launch point and 1:20,000,000 inches per inch for distances greater than 100 nm from a launch point.	Map types with scale and projection information are listed in the Defense Mapping Agency, Public Sale, Aeronautical Charts and Publications Catalog. The catalog and maps may be ordered through the U.S. Dept. of Commerce, National Oceanic and Atmospheric Administration, National Ocean Service.

(ii) For a guided orbital launch vehicle, an applicant shall obtain or create a launch vehicle nominal trajectory. An applicant may use trajectory data from a launch vehicle manufacturer or generate a trajectory using trajectory simulation software. Trajectory time intervals shall be no greater than one second. If an applicant uses a trajectory computed with commercially available software, the software must calculate the trajectory using the following parameters, or clearly and convincingly demonstrated equivalents:

(A) Launch location:

(*1*) Launch point, using geodetic latitude and longitude to four decimal places; and

(*2*) Launch point height above sea level.

(B) Ellipsoidal Earth:

(*1*) Mass of Earth;

(*2*) Radius of Earth;

(*3*) Earth flattening factor; and

(*4*) Gravitational harmonic constants (J2, J3, J4).

(C) Vehicle characteristics:

(*1*) Mass as a function of time;

(*2*) Thrust as a function of time;

(*3*) Specific impulse (I_{SP}) as a function of time; and

(*4*) Stage dimensions.

(D) Launch events:

(*1*) Stage burn times; and

(*2*) Stage drop-off times.

(E) Atmosphere:

(*1*) Density as a function of altitude;

(*2*) Pressure as a function of altitude;

(*3*) Speed of sound as a function of altitude; and

(*4*) Temperature as a function of altitude.

(F) Winds:

(1) Wind direction as a function of altitude; and

(2) Wind magnitude as a function of altitude.

(I) Aerodynamics: drag coefficient as a function of mach number for each stage of flight showing subsonic, transonic and supersonic mach regions for each stage.

(iii) An applicant shall use a ballistic coefficient (β) of 3 lbs/ft^2 for debris impact computations.

(iv) An applicant shall satisfy the map and plotting requirements for a launch area of appendix A, paragraph (b).

(2) Downrange area data requirements. An applicant shall satisfy the following data requirements to perform the downrange area analysis of this appendix.

(i) The launch vehicle weight class and method of generating a trajectory used in the launch area shall be used by an applicant in the downrange area as well. Trajectory time intervals must not be greater than one second.

(ii) An applicant shall satisfy the map and plotting data requirements for a downrange area of appendix A, paragraph (b).

(c) Construction of a Launch Area of a Flight Corridor

(1) An applicant shall construct a launch area of a flight corridor using the processes and equations of this paragraph for each trajectory position. An applicant shall repeat these processes at time points on the launch vehicle trajectory for time intervals of no greater than one second. When choosing wind data, an applicant shall use a time period of between one and 12 months.

(2) A launch area analysis must include all trajectory positions whose Z-values are less than or equal to 50,000 ft.

(3) Each trajectory time is denoted by the subscript ''i''. Height intervals for a given atmospheric pressure level are denoted by the subscript ''j'.

(4) Using data from the GGUAS CD-ROM, an applicant shall estimate the mean atmospheric density, maximum wind speed, height interval fall times and height interval debris dispersions for 15 mean geometric height intervals.

(i) The height intervals in the GGUAS source data vary as a function of the following 15 atmospheric pressure levels expressed in millibars: surface, 1000, 850, 700, 500, 400, 300, 250, 200, 150, 100, 70, 50, 30, 10. The actual geometric height associated with each pressure level varies depending on the time of year. An applicant shall estimate the mean geometric height over the period of months selected in subparagraph (1) of this paragraph for each of the 15 pressure levels as shown in equation B1.

$$\overline{H}_j = \frac{\sum_{m=1}^{k} h_m \cdot n_m}{\sum_{m=1}^{k} n_m} \qquad \text{(Equation B1)}$$

where:

$\bar{H}_j$ = mean geometric height h_m = geometric height for a given month n_m = number of observations for a given month

k = number of wind months of interest

(ii) The atmospheric densities in the source data also vary as a function of the 15 atmospheric pressure levels. The actual atmospheric density associated with each pressure level varies depending on the time of year. An applicant shall estimate the mean atmospheric density over the period of months selected in accordance with subparagraph (1) of this paragraph for each of the 15 pressure levels as shown in equation B2.

$$\bar{\rho}_j \frac{\sum_{m=1}^{k} \rho_m \cdot n_m}{\sum_{m=1}^{k} n_m} \qquad \text{(Equation B2)}$$

where:

ρ_j = mean atmospheric density

$\overline{\rho_m}$ = atmospheric density for a given month

n_m = number of observations for a given month

k = number of wind months of interest

(iii) An applicant shall estimate the algebraic maximum wind speed at a given pressure level as follows and shall repeat the process for each pressure level.

(A) For each month, an applicant shall calculate the monthly mean wind speed ($\overline{W}_{az}$) for 360 azimuths using equation B3;

(B) An applicant shall select the maximum monthly mean wind speed from the 360 azimuths;

(C) An applicant shall repeat subparagraphs (c)(4)(iii)(A) and (B) for each month of interest; and

(D) An applicant shall select the maximum mean wind speed from the range of months. The absolute value of this wind is designated W_{max} for the current pressure level.

(iv) An applicant shall calculate wind speed using the means for winds from the West (u) and winds from the North (v). An applicant shall use equation B3 to resolve the winds to a specific azimuth bearing.

$$\overline{W}_{az} = u \cdot \cos(90 - az) + v \cdot \sin(90 - az) \qquad \text{(Equation B3)}$$

where:

az = wind azimuth

u = West zonal wind component

v = North zonal wind component

$\overline{W}_{az}$ = mean wind speed at azimuth for each month

(v) An applicant shall estimate the interval fall time over a height interval assuming the initial descent velocity is equal to the terminal velocity (V_T). An applicant shall use equations B4 through B6 to estimate the fall time over a given height interval.

$$\Delta H_j = \overline{H}_{j+1} - \overline{H}_j \qquad \text{(Equation B4)}$$

$$V_{Tj} = \left[\frac{2 \cdot \beta}{\frac{\left(\overline{\rho}_{j+1} + \overline{\rho}_j\right)}{2}} \right]^{0.5} \qquad \text{(Equation B5)}$$

$$t_j = \frac{\Delta H_j}{V_{Tj}} \qquad \text{(Equation B6)}$$

where:

ΔH_{Tj}= height difference between two mean geometric heights

β= ballistic coefficient

$\overline{\rho}x$= mean atmospheric density for the corresponding mean geometric heights

V_{Tj} = terminal velocity

(vi) An applicant shall estimate the interval debris dispersion (D_j) by multiplying the interval fall time by the algebraic maximum mean wind speed (W_{max}) as shown in equation B7.

$$D_j = t_j \cdot W_{max} \qquad \text{(Equation B7)}$$

(5) Once the Dj are estimated for each height interval, an applicant shall determine the total debris dispersion (D_i) for each Z_i using a linear interpolation and summation exercise, as shown below in equation B8. An applicant shall use a launch point height of zero equal to the surface level of the nearest GGUAS grid location.

$$D_i = D_j \cdot \left(\frac{Z_i - \overline{H}_i}{H_{j+1} - \overline{H}_i} \right) + \sum_{n=1}^{j-1} D_n \qquad \text{(Equation B8)}$$

where:

n = number of height intervals below jth height interval

(6) Once all the D_i radii have been calculated, an applicant shall produce a launch area flight corridor in accordance with the requirements of subparagraphs (c)(6)(i)–(iv).

(i) On a map meeting the requirements of appendix A, paragraph (b), an applicant shall plot the X_i position location on the flight azimuth for the corresponding Z_i position;

(ii) An applicant shall draw a circle of radius D_i centered on the corresponding X_i position; and

(iii) An applicant shall repeat the instructions in subparagraphs (c)(6)(i)–(ii) for each D_i radius.

(iv) The launch area of a flight corridor is the enveloping line that encloses the outer boundary of the D_i circles as shown in Fig. B–1. The uprange portion of a flight corridor is described by a semi-circle arc that is a

portion of either the most uprange D_i dispersion circle, or the overflight exclusion zone (defined by subparagraph (c)(7)), whichever is further uprange.

(7) An applicant shall define an overflight exclusion zone in the launch area in accordance with the requirements of appendix A, subparagraph (c)(2).

(8) An applicant shall draw the launch area flight corridor and overflight exclusion zone on a map or maps that meet the requirements of table B–1.

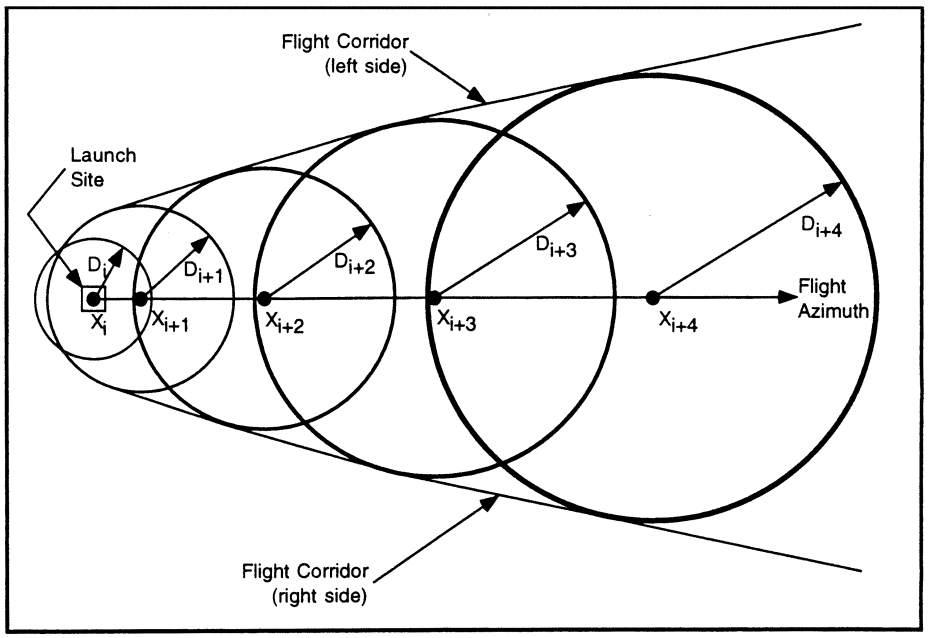

Figure B - 1: Launch Area of a Flight Corridor

(d) Construction of a Downrange Area of a Flight Corridor

(1) The downrange area analysis estimates the debris dispersion for the downrange time points on a launch vehicle trajectory. An applicant shall perform the downrange area analysis using the processes and equations of this paragraph.

(2) The downrange area analysis shall include trajectory positions at a height (the Z_i-values) greater than 50,000 feet and nominal trajectory IIP values less than or equal to 5,000 nm. For a guided suborbital launch vehicle, the final IIP value for which an applicant must account is the launch vehicle final stage impact point. Each trajectory time shall be one second or less and is denoted by the subscript ''i'.

(3) An applicant shall compute the downrange area of a flight corridor boundary in four steps, from each trajectory time increment: determine a reduction ratio factor; calculate the launch vehicle position after simulating a malfunction turn; rotate the state vector after the malfunction turn in the range of three degrees to one degree as a function of X_i distance downrange; and compute the IIP of the resulting trajectory. The locus of IIPs describes the boundary of the downrange area of a flight corridor. An applicant shall use the following subparagraphs, (d)(3)(i)–(v), to compute the downrange area of the flight corridor boundary:

(i) Compute the downrange Distance to the final IIP position for a nominal trajectory as follows:

(A) Using equations B30 through B69, determine the IIP coordinates (φ_{max}, λ_{max}) for the nominal state vector before the launch vehicle enters orbit where α in equation B30 is the nominal flight azimuth angle measured from True North.

(B) Using the range and bearing equations of appendix A, paragraph (b)(3), determine

the distance (S_{max}) from the launch point coordinates (φ_{lp}, λ_{lp}) to the IIP coordinates (φ_{max}, λ_{max}) computed in accordance with (3)(i)(A) of this paragraph.

(C) The distance for S_{max} may not exceed 5000 nm. In cases when the actual value exceeds 5000 nm the applicant shall use 5000 nm for S_{max}.

(ii) Compute the reduction ratio factor (F_n) for each trajectory time increment as follows:

(A) Using equations B30 through B69, determine the IIP coordinates (φ_i, λ_i) for the nominal state vector where α in equation B30 is the nominal flight azimuth angle measured from True North.

(B) Using the range and bearing equations of appendix A, paragraph (b)(3), determine the distance (S_i) from the launch point coordinates (φ_{lp}, λ_{lp}) to the IIP coordinates (φ_i, λ_i) computed in (3)(ii)(A) of this paragraph.

(C) The reduction ratio factor is:

$$F_{ri} = \left(1 - \frac{S_i}{S_{max}}\right) \qquad \text{(Equation B9)}$$

(iii) An applicant shall compute the launch vehicle position and velocity components after a simulated malfunction turn for each X_i using the following method.

(A) Turn duration (Δt) = 4 sec.

(B) Turn angle (θ)

$$\theta = (F_{ri}) * 45 \text{ degrees.} \qquad \text{(Equation B10)}$$

The turn angle equations perform a turn in the launch vehicle's yaw plane, as depicted in figure B–2.

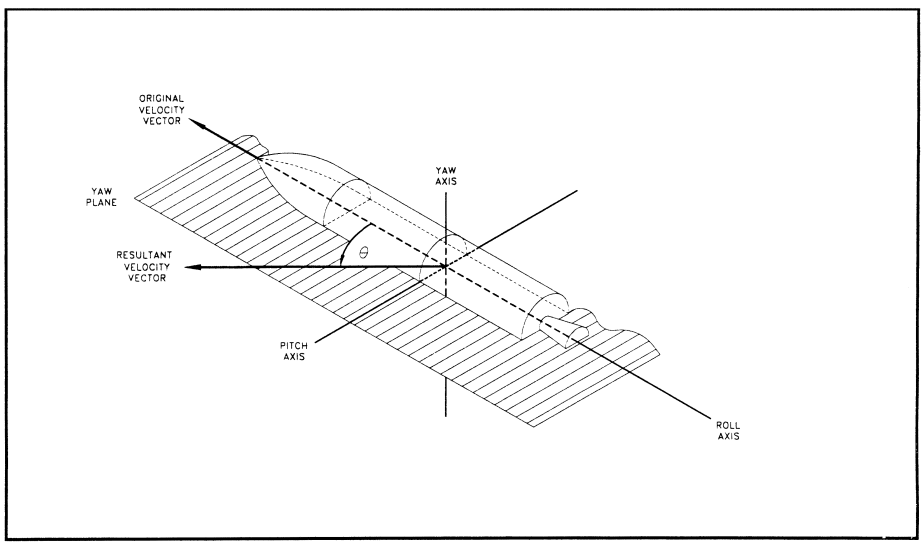

Figure B-2: Velocity Vector Turn Angle in Yaw Plane

(C) Launch vehicle velocity magnitude at the beginning of the turn (V_b) and velocity magnitude at the end of the turn (V_e)

$$V_b = \left(\dot{X}_1^2 + \dot{Y}_i^2 + \dot{Z}_i^2\right)^{0.5} \text{ ft/sec} \qquad \text{(Equation B11)}$$

$$V_e = \left(\dot{X}_{i+5}^2 + \dot{Y}_{i+5}^2 + \dot{X}_{i+5}^2\right)^{0.5} \text{ ft/sec} \qquad \text{(Equation B12)}$$

(D) Average velocity magnitude over the turn duration ($\bar{V}$)

$$\overline{V}_i = \frac{(V_b + V_e)}{2} \text{ ft/sec} \qquad \text{(Equation B13)}$$

(E) Velocity vector path angle (γ_i) at turn epoch

$$\gamma_i = \tan^{-1}\left[\frac{\dot{Z}_i}{\left(\dot{X}_i^2 + \dot{Y}_i^2\right)^{0.5}}\right] \qquad \text{(Equation B14)}$$

(F) Launch vehicle position components at the end of turn duration

$$X_{90L} = X_i + \overline{V}_i \cdot \Delta t \cdot \cos\left(\frac{-\theta}{2}\right) \cdot \cos(\gamma_i)$$

$$X_{90R} = X_i + \overline{V}_i \cdot \Delta t \cdot \cos\left(\frac{\theta}{2}\right) \cdot \cos(\gamma_i)$$

$$Y_{90L} = Y_i + \overline{V}_i \cdot \Delta t \cdot \sin\left(\frac{-\theta}{2}\right)$$

$$Y_{90R} = Y_i + \overline{V}_i \cdot \Delta t \cdot \sin\left(\frac{\theta}{2}\right)$$

$$Z_{90L} = Z_i + \overline{V}_i \cdot \Delta t \cdot \cos\left(\frac{-\theta}{2}\right) \cdot \sin(\gamma_i) - \left(\frac{1}{2}\right) \cdot g_1 \cdot \Delta t^2 \qquad \text{(Equations B15 - B20)}$$

$$Z_{90R} = Z_i + \overline{V}_i \cdot \Delta t \cdot \cos\left(\frac{\theta}{2}\right) \cdot \sin(\gamma_i) - \left(\frac{1}{2}\right) \cdot g_1 \cdot \Delta t^2$$

where: g_1 = 32.17405 ft/sec^2

(G) Launch vehicle velocity components at the end of turn duration

$$\dot{X}_{90L} = (X_{90L} - X_i)/\Delta t$$

$$\dot{X}_{90R} = (X_{90R} - X_i)/\Delta t$$

$$\dot{Y}_{90L} = \left|(Y_{90L} - Y_i)/\Delta t\right|$$

$$\dot{Y}_{90R} = (-1)\cdot\left|(Y_{90R} - Y_i)/\Delta t\right| \qquad \text{(Equations B21 - B26)}$$

$$\dot{Z}_{90L} = (Z_{90L} - Z_i)/\Delta t$$

$$\dot{Z}_{90R} = (Z_{90R} - Z_i)/\Delta t$$

(iv) An applicant shall rotate the trajectory state vector at the end of the turn duration to the right and left to define the right-lateral flight corridor boundary and the left-lateral flight corridor boundary, respectively. An applicant shall perform the trajectory rotation in conjunction with a trajectory transformation from the X_{90}, Y_{90}, Z_{90}, $\dot{X}_{90}$, $\dot{Y}_{90}$, $\dot{Z}_{90}$, components to E, N, U, $\dot{E}$, $\dot{N}$, $\dot{U}$. The trajectory subscripts ''R'' and ''L'' from equations B15 through B26 have been discarded to reduce the number of equations. An applicant shall transform from to E,N,U,$\dot{E}$,$\dot{N}$,$\dot{U}$ to E,F,G,$\dot{E}$,$\dot{F}$,$\dot{G}$. An applicant shall use the equations of paragraph (d)(3)(iv)(A)–(F) to produce the EFG components necessary to estimate each instantaneous impact point.

(A) An applicant must calculate the flight angle (α)

$$\Delta\alpha_i = 3 - 2\cdot f_1\cdot(1 - F_{ri}) \qquad \text{(Equation B27)}$$

$$\alpha_{Li} = (\text{Flight Azimuth} - \Delta\alpha_i)$$

for left lateral boundary computations (Equation B28)

- OR

$$\alpha_{Ri} = (\text{Flight Azimuth} - \Delta\alpha_i)$$

for right lateral boundary computations (Equation B29)

where: $$f_1 = \begin{Bmatrix} 0.0 : F_{ri} \geq 0.8 \\ 1.0 : F_{ri} < 0.8 \end{Bmatrix}$$

(B) An applicant shall transform X_{90},Y_{90},Z_{90} to E,N,U

$$E = X_{90}\sin(\alpha) - Y_{90}\cos(\alpha)$$

$$N = X_{90}\cos(\alpha) + Y_{90}\sin(\alpha) \qquad \text{(Equations B30 - B32)}$$

$$U = Z_{90}$$

(C) An applicant shall transform to $\dot{X}_{90}$, $\dot{Y}_{90}$, $\dot{Z}_{90}$ to $\dot{E}$, $\dot{N}$, $\dot{U}$.

$$\dot{E} = \dot{X}_{90}\sin(\alpha) - \dot{Y}_{90}\cos(\alpha)$$
$$\dot{N} = \dot{X}_{90}\cos(\alpha) + \dot{Y}_{90}\sin(\alpha) \qquad \text{(Equations B33 - B35)}$$
$$\dot{U} = \dot{Z}_{90}$$

(D) An applicant shall transform the launch point coordinates ($\varphi_0\lambda_0,h_0$) to E_0,F_0,G_0

$$R = a_E\left\{1 - e^2\left[\sin^2(\phi_0)\right]\right\}^{-0.5}$$

where: $a_E = 20925646.3255$ ft

$$e^2 = 0.00669437999013$$
$$E_0 = (R + h_0)\cos(\phi_0)\cos(\lambda_0) \qquad \text{(Equations B36 - B39)}$$
$$F_0 = (R + h_0)\cos(\phi_0)\sin(\lambda_0)$$
$$G_0 = \left[R(1 - e^2) + h_0\right]\sin(\phi_0)$$

(E) An applicant shall transform E,N,U to E_{90},F_{90},G_{90}

$$E_{90} = E\cos(270 - \lambda_0) + N\cos(90 - \phi_0)\sin(270 - \lambda_0) - U\sin(90 - \phi_0)\sin(270 - \lambda_0) \qquad \text{(Equations B40 - B42)}$$
$$F_{90} = E\sin(270 - \lambda_0) + N\cos(90 - \phi_0)\cos(270 - \lambda_0) - U\sin(90 - \phi_0)\cos(270 - \lambda_0)$$
$$G_{90} = N\sin(90 - \phi_0) + U\cos(90 - \phi_0) + G_0$$

(F) An applicant shall transform to $\dot{E},\dot{N},\dot{U}$ TO $\dot{E},\dot{F},\dot{G}$

$$\dot{E}_{90} = \dot{E}\cos(270 - \lambda_0) + \dot{N}\cos(90 - \phi_0)\sin(270 - \lambda_0) - \dot{U}\sin(90 - \phi_0)\sin(270 - \lambda_0) \qquad \text{(Equations B43 - B45)}$$
$$\dot{F}_{90} = \dot{E}\sin(270 - \lambda_0) + \dot{N}\cos(90 - \phi_0)\cos(270 - \lambda_0) - \dot{U}\sin(90 - \phi_0)\cos(270 - \lambda_0)$$
$$\dot{G}_{90} = \dot{N}\sin(90 - \phi_0) + \dot{U}\cos(90 - \phi_0)$$

(v) The IIP computation implements an iterative solution to the impact point problem. An applicant shall solve equations B46 through B69, with the appropriate substitutions, up to a maximum of five times. Each repetition of the equations provides a

more accurate prediction of the IIP. An applicant shall use the required IIP computations of paragraphs (d)(3)(v)(A)–(W) below. An applicant shall use this IIP computation for both the left-and right-lateral offsets. The IIP computations will result in latitude and longitude pairs for the left-lateral flight corridor boundary and the right-lateral flight corridor boundary. An applicant shall use the lines connecting the latitude and longitude pairs to describe the entire downrange area boundary of the flight corridor up to 5000 nm or a final stage impact dispersion area.

(A) An applicant shall approximate the radial distance ($r_{k,l}$) from the geocenter to the IIP. The distance from the center of the Earth ellipsoid to the launch point shall be used for the initial approximation of $r_{k,l}$ as shown in equation B46.

$$r_{k,l} = \left(E_0^2 + F_0^2 + G_0^2\right)^{0.5} \qquad \text{(Equation B46)}$$

(B) An applicant shall compute the radial distance (r) from the geocenter to the launch vehicle position.

$$r = \left(E_{90}^2 + F_{90}^2 + G_{90}^2\right)^{0.5} \qquad \text{(Equation B47)}$$

If $r < r_{k,l}$ then the launch vehicle position is below the Earth's surface and an impact point cannot be computed. An applicant must restart the calculations with the next trajectory state vector.

(C) An applicant shall compute the inertial velocity components.

$$\dot{E}l_{90} = \dot{E}_{90} - \omega \cdot F_{90}$$
$$\dot{F}l_{90} = \dot{F}_{90} + \omega \cdot E_{90} \qquad \text{(Equations B48-B49)}$$

where: $\omega = 4.178074 \times 10^{-3}$ deg/sec

(D) An applicant shall compute the magnitude of the inertial velocity vector.

$$v_0\left(\dot{E}I_{90}^2 + \dot{F}I_{90}^2 + \dot{G}_{90}^2\right)^{0.5} \qquad \text{(Equation B50)}$$

(E) An applicant shall compute the eccentricity of the trajectory ellipse multiplied by the cosine of the eccentric anomaly at epoch ε_c).

$$\varepsilon_c = \left(\frac{r \cdot v_0^2}{K}\right) - 1 \qquad \text{(Equation B51)}$$

where: $K = 1.407644 \times 10^{16}$ ft^3/sec^2

(F) An applicant shall compute the semi-major axis of the trajectory ellipse (a^t).

$$a_t = \frac{r}{1 - \varepsilon_c} \qquad \text{(Equation B52)}$$

If a_t 0 or a_t then the trajectory orbit is not elliptical, but is hyperbolic or parabolic, and an impact point cannot be computed. The launch vehicle has achieved escape velocity and the applicant may terminate computations.

(G) An applicant shall compute the eccentricity of the trajectory ellipse multiplied by the sine of the eccentric anomaly at epoch ε_s).

$$\varepsilon_s = \frac{\left(E_{90}\dot{E}I_{90} + F_{90}\dot{F}I_{90} + G_{90}\dot{G}_{90}\right)}{\left(K \cdot a_t\right)^{0.5}} \qquad \text{(Equation B53)}$$

(H) An applicant shall compute the eccentricity of the trajectory ellipse squared ε^2).

$$\varepsilon^2 = \left(\varepsilon_c^2 + \varepsilon_s^2\right) \qquad \text{(Equation B54)}$$

If $a_t(1-\varepsilon) - a_E] > 0$ and $\varepsilon \geq 0$ then the trajectory perigee height is positive and an impact point cannot be computed. The launch vehicle has achieved Earth orbit and the applicant may terminate computations.

(I) An applicant shall compute the eccentricity of the trajectory ellipse multiplied by the cosine of the eccentric anomaly at impact (ε_{c_k}).

$$\varepsilon_{c_k} = \frac{\left(a_t - r_{k,1}\right)}{a_t} \qquad \text{(Equation B55)}$$

(J) An applicant shall compute the eccentricity of the trajectory ellipse multiplied by the sine of the eccentric anomaly at impact (ε_{s_k}).

$$\varepsilon_{s_k} = -\left(\varepsilon^2 - \varepsilon^2{}_{c_k}\right)^{0.5} \qquad \text{(Equation B56)}$$

If $\varepsilon_{s_k} < 0$ then the trajectory orbit does not intersect the Earth's surface and an impact point cannot be computed. The launch vehicle has achieved Earth orbit and the applicant may terminate computations.

(K) An applicant shall compute the cosine of the difference between the eccentric anomaly at impact and the eccentric anomaly at epoch ($\Delta\varepsilon_{c_k}$).

$$\Delta\varepsilon_{c_k} = \frac{\left(\varepsilon_{c_k} \cdot \varepsilon_c\right) + \left(\varepsilon_{s_k} \cdot \varepsilon_s\right)}{\varepsilon^2} \qquad \text{(Equation B57)}$$

(L) An applicant shall compute the sine of the difference between the eccentric anomaly at impact and the eccentric anomaly at epoch ($\Delta\varepsilon_{s_k}$).

$$\Delta\varepsilon_{s_k} = \frac{\left(\varepsilon_{s_k} \cdot \varepsilon_c\right) - \left(\varepsilon_{c_k} \cdot \varepsilon_s\right)}{\varepsilon^2} \qquad \text{(Equation B58)}$$

(M) An applicant shall compute the f-series expansion of Kepler's equations.

$$f_2 = \frac{\left(\Delta\varepsilon_{c_k} - \varepsilon_c\right)}{\left(1 - \varepsilon_c\right)} \qquad \text{(Equation B59)}$$

(N) An applicant shall compute the g-series expansion of Kepler's equations.

$$g_2 = \left(\Delta\varepsilon_{s_k} + \varepsilon_s - \varepsilon_{s_k}\right)\left(\frac{a_t^3}{K}\right)^{0.5} \qquad \text{(Equation B60)}$$

(O) An applicant shall compute the E,F,G coordinates at impact (E_i,F_i,G_i).

$$E_k = f_2 \cdot E_{90} + g_2 \cdot \dot{E}l_{90}$$
$$F_k = f_2 \cdot F_{90} + g_2 \cdot \dot{F}l_{90} \qquad \text{(Equations B61-B63)}$$
$$G_k = f_2 \cdot G_{90} + g_2 \cdot \dot{G}_{90}$$

(P) An applicant shall approximate the distance from the geocenter to the launch vehicle position at impact ($r_{k,2}$).

$$r_{k,2} = \frac{a_E}{\left[\left(\frac{e^2}{1-e^2}\right)\left(\frac{G_k}{r_{k,1}}\right)^2 + 1\right]^{0.5}} \qquad \text{(Equation B64)}$$

where:

a_E = 20925646.3255 ft

e^2 = 0.00669437999013

(Q) An applicant shall let $r_{k+1,1} = r_{k,2}$, substitute $r_{k+1,1}$ for $r_{k,1}$ in equation B55 and repeat equations B55—B64 up to four more times increasing ''k'' by an increment of one on each loop (e.g. $k\varepsilon\{1, 2, 3, 4, 5\}$). If $|r_{5,1} - r_{5,2}| > 1$ then the iterative solution does not converge and an impact point does not meet the accuracy tolerance of plus or minus one foot. An applicant must try more iterations, or restart the calculations with the next trajectory state vector.

(R) An applicant shall compute the difference between the eccentric anomaly at impact and the eccentric anomaly at epoch ($\Delta\varepsilon$).

$$\Delta\varepsilon = \tan^{-1}\left(\frac{\Delta\varepsilon_{s_5}}{\Delta\varepsilon_{c_5}}\right) \qquad \text{(Equation B65)}$$

(S) An applicant shall compute the time of flight from epoch to impact (t).

$$t = \left(\Delta\varepsilon + \varepsilon_s - \varepsilon_{s_5}\right)\left(\frac{a_t^3}{K}\right)^{0.5} \qquad \text{(Equation B66)}$$

(T) An applicant shall compute the geocentric latitude at impact (φ').

$$\phi_i' = \sin^{-1}\left(\frac{G_5}{r5,2}\right) \qquad \text{(Equation B67)}$$

Where: $+90° > \varphi'_i > -90°$

(U) An applicant shall compute the geodetic latitude at impact (φ).

$$\phi_i = \tan^{-1}\left[\frac{\tan\left(\phi_i'\right)}{\left(1-e^2\right)}\right] \qquad \text{(Equation B68)}$$

Where: $+90° > \varphi_i > -90°$

(V) An applicant shall compute the East longitude at impact (λ).

$$\lambda_i = \tan^{-1}\left(\frac{F_5}{E_5}\right) - \omega t \qquad \text{(Equation B69)}$$

(W) If the range from the launch point to the impact point is equal to or greater than 5000 nm, an applicant shall terminate IIP computations.

(4) For a guided suborbital launch vehicle, an applicant shall define a final stage impact dispersion area as part of the flight corridor and show the area on a map using the following procedure:

(i) For equation B70 below, an applicant shall use an apogee altitude (H_{ap}) corresponding to the highest altitude reached

by the launch vehicle final stage in the applicant's launch vehicle trajectory analysis done in accordance with paragraph (b)(1)(ii).

(ii) An applicant shall define the final stage impact dispersion area by using a dispersion factor [DISP(H_{ap})] as shown below. An applicant shall calculate the impact dispersion radius (R) for the final launch vehicle stage. An applicant shall set R equal to the maximum apogee altitude (H_{ap}) multiplied by the dispersion factor as shown below:

$$R = H_{ap} \cdot DISP\left(H_{ap}\right) \qquad \text{(Equation B70)}$$

where: DISP(H_{ap}) = 0.05

(5) An applicant shall combine the launch area and downrange area flight corridor and any final stage impact dispersion area for a guided suborbital launch vehicle.

(i) On the same map with the launch area flight corridor, an applicant shall plot the latitude and longitude positions of the left and right sides of the downrange area of the flight corridor calculated in accordance with subparagraph (d)(3).

(ii) An applicant shall connect the latitude and longitude positions of the left side of the downrange area of the flight corridor sequentially starting with the last IIP calculated on the left side and ending with the first IIP calculated on the left side. An applicant shall repeat this procedure for the right side.

(iii) An applicant shall connect the left sides of the launch area and downrange portions of the flight corridor. An applicant shall repeat this procedure for the right side.

(iv) An applicant shall plot the overflight exclusion zone defined in subparagraph (c)(7).

(v) An applicant shall draw any impact dispersion area on the downrange map with the center of the impact dispersion area on the launch vehicle final stage impact point obtained from the applicant's launch vehicle trajectory analysis done in accordance with subparagraph (b)(1)(ii).

(e) Evaluate the Launch Site

(1) An applicant shall evaluate the flight corridor for the presence of populated areas. If no populated area is located within the flight corridor, then no additional steps are necessary.

(2) If a populated area is located in an overflight exclusion zone, an applicant may modify its proposal or demonstrate that there are times when no people are present or that the applicant has an agreement in place to evacuate the public from the overflight exclusion zone during a launch.

(3) If a populated area is located within the flight corridor, an applicant may modify its proposal or complete an overflight risk analysis in accordance with appendix C.

APPENDIX C TO PART 420—RISK ANALYSIS

(a) Introduction

(1) This appendix provides a method for an applicant to estimate the expected casualty (E_c) for a launch of a guided expendable launch vehicle using a flight corridor generated either by appendix A or appendix B. This appendix also provides an applicant options to simplify the method where population at risk is minimal.

(2) An applicant shall perform a risk analysis when a populated area is located within a flight corridor defined by either appendix A or appendix B. If the estimated expected casualty exceeds 30×10^{-6}, an applicant may either modify its proposal, or if the flight corridor used was generated by the appendix A method, use the appendix B method to narrow the flight corridor and then redo the overflight risk analysis pursuant to this appendix. If the estimated expected casualty still exceeds 30×10^{-6} the FAA will not approve the location of the proposed launch point.

(b) Data Requirements

(1) An applicant shall obtain the data specified by subparagraphs (b)(2) and (3) and summarized in table C–1. Table C–1 provides sources where an applicant may obtain data acceptable to the FAA. An applicant must also employ the flight corridor information from appendix A or B, including flight azimuth and, for an appendix B flight corridor, trajectory information.

(2) Population data. Total population (N) and the total landmass area within a populated area (A) are required. Population data up to and including 100 nm from the launch point are required at the U.S. census block group level. Population data downrange from 100 nm are required at no greater than $1° \times 1°$ latitude/longitude grid coordinates.

(3) Launch vehicle data. Launch vehicle data consist of the launch vehicle failure probability (P_f), the launch vehicle effective casualty area (A_c), trajectory position data, and the overflight dwell time (t_d). The failure probability is a constant (P_f = 0.10) for a guided orbital or suborbital expendable launch vehicle. Table C–3 provides effective casualty area data based on IIP range. Trajectory position information is provided from distance computations provided by this appendix for an appendix A flight corridor, or trajectory data used in appendix B for an appendix B flight corridor. The dwell time (t_d) may be determined from trajectory data produced when creating an appendix B flight corridor.

TABLE C–1—OVERFLIGHT ANALYSIS DATA REQUIREMENTS

Data category	Data item	Data source
Population Data	Total population within a populated area (N).	Within 100 nm of the launch point: U.S. census data at the census block-group level. Downrange from 100 nm beyond the launch point, world population data are available from:
	Total landmass area within the populated area (A).	Carbon Dioxide Information Analysis Center (CDIAC) Oak Ridge National Laboratory Database—Global Population Distribution (1990), Terrestrial Area and Country Name Information on a One by One Degree Grid Cell Basis (DB1016 (8–1996)
Launch Vehicle Data	Failure probability—P_f = 0.10	N/A.
	Effective casualty area (A_c)	See table C–3.
	Overflight dwell time	Determined by range from the launch point or trajectory used by applicant.
	Nominal trajectory data (for an appendix B flight corridor only).	See appendix B, table B–1.

(c) Estimating Corridor Casualty Expectation

(1) A corridor casualty expectation [E_C(Corridor)] estimate is the sum of the expected casualty measurement of each populated area inside a flight corridor.

(2) An applicant shall identify and locate each populated area in the proposed flight corridor.

(3) An applicant shall determine the probability of impact in each populated area using the procedures in subparagraphs (5) or (6) of this paragraph. Figures C–1 and C–2 illustrate an area considered for probability of impact (P_i) computations by the dashed-lined box around the populated area within a flight corridor, and figure C–3 illustrates a populated area in a final stage impact dispersion area. An applicant shall then estimate the E_C for each populated area in accordance with subparagraphs (7) and (8) of this paragraph.

(4) The P_i computations do not directly account for populated areas whose areas are bisected by an appendix A flight corridor centerline or an appendix B nominal trajectory ground trace. Accordingly, an applicant must evaluate P_i for each of the bi-sections as two separate populated areas, as shown in figure C–4, which shows one bi-section to the left of an appendix A flight corridor's centerline and one to its right.

(5) Probability of impact (P_i) computations for a populated area in an appendix A flight corridor. An applicant shall compute P_i for each populated area using the following method:

(i) For the launch and downrange areas, but not for a final stage impact dispersion area for a guided suborbital launch vehicle, an applicant shall compute P_i for each populated area using the following equation:

$$P_i = \frac{\left(\frac{|y_2 - y_1|}{\sigma_y}\right)}{6\sqrt{2\pi}} \cdot \left(\exp\left(\frac{-\left(y_1/\sigma_y\right)^2}{2} \right) + 4 \cdot \exp\left[\frac{-\left(\frac{y_1 + y_2}{2\sigma_y}\right)^2}{2} \right] + \exp\left(\frac{-\left(y_2/\sigma_y\right)^2}{2} \right) \right) \cdot \left[\frac{P_f}{C} \cdot \frac{(x_2 - x_1)}{\dot{R}} \right] \quad \text{(Equation C1)}$$

where:

x_1, x_2 = closest and farthest downrange distance (nm) along the flight corridor centerline to the populated area (see figure C–1)

y_1, y_2 = closest and farthest cross range distance (nm) to the populated area measured from the flight corridor centerline (see figure C–1)

σ_y = one-third of the cross range distance from the centerline to the flight corridor boundary (see figure C–1)

exp = exponential function (e^x)

P_f = probability of failure = 0.10

$\dot{R}$ = IIP range rate (nm/sec) (see table C–2)

C = 643 seconds (constant)

TABLE C–2—IIP RANGE RATE VS. IIP RANGE

IIP range (nm)	IIP range rate (nm/s)
0–75	0.75
76–300	1.73
301–900	4.25
901–1700	8.85
1701–2600	19.75
2601–3500	42.45
3501–4500	84.85
4501–5250	154.95

(ii) For each populated area within a final stage impact dispersion area, an applicant shall compute P_i using the following method:

(A) An applicant shall estimate the probability of final stage impact in the x and y sectors of each populated area within the final stage impact dispersion area using equations C2 and C3:

$$P_x = \frac{\left(\frac{|x_2 - x_1|}{\sigma_x}\right)}{6\sqrt{2\pi}} \cdot \left(\exp\left(\frac{-\left(x_1/\sigma_x\right)^2}{2}\right) + 4 \cdot \exp\left[\frac{-\left(\frac{x_1 + x_2}{2\sigma_x}\right)^2}{2}\right] + \exp\left(\frac{-\left(x_2/\sigma_x\right)^2}{2}\right)\right) \qquad \text{(Equation C2)}$$

where:

X_1, X_2 = closest and farthest downrange distance, measured along the flight corridor centerline, measured from the nominal impact point to the populated area (see figure C–3)

σ_x = one-third of the impact dispersion radius (see figure C–3)

exp = exponential function (e^x)

$$P_y = \frac{\left(\frac{|y_2 - y_1|}{\sigma_y}\right)}{6\sqrt{2\pi}} \cdot \left(\exp\left(\frac{-\left(y_1/\sigma_y\right)^2}{2}\right) + 4 \cdot \exp\left[\frac{-\left(\frac{y_1 + y_2}{2\sigma_y}\right)^2}{2}\right] + \exp\left(\frac{-\left(y_2/\sigma_y\right)^2}{2}\right)\right) \qquad \text{(Equation C3)}$$

where:

y_1, y_2 = closest and farthest cross range distance to the populated area measured from the flight corridor centerline (see figure C–3)

σ_y = one-third of the impact dispersion radius (see figure C–3)

exp = exponential function (e^x)

(B) If a populated area intersects the impact dispersion area boundary so that the x_2 or y_2 distance would otherwise extend outside the impact dispersion area, the x_2 or y_2 distance should be set equal to the impact dispersion area radius. The x_2 distance for populated area A in figure C–3 is an example. If a populated area intersects the flight azimuth, an applicant shall solve equation C3 by obtaining the solution in two parts. An applicant shall determine, first, the probability between $y_1 = 0$ and $y_2 = a$ and, second, the probability between $y_1 = 0$ and $y_2 = b$, as depicted in figure C–4. The probability P_y is then equal to the sum of the probabilities of the two parts. If a populated area intersects the line that is normal to the flight azimuth on the impact point, an applicant shall solve equation C2 by obtaining the solution in two parts in the same manner as with the values of x.

(C) An applicant shall calculate the probability of impact for each populated area using equation C4 below:

$$P_I = P_s \cdot P_x \cdot P_y \qquad \text{(Equation C4)}$$

where: $P_s = 1 - P_f = 0.90$

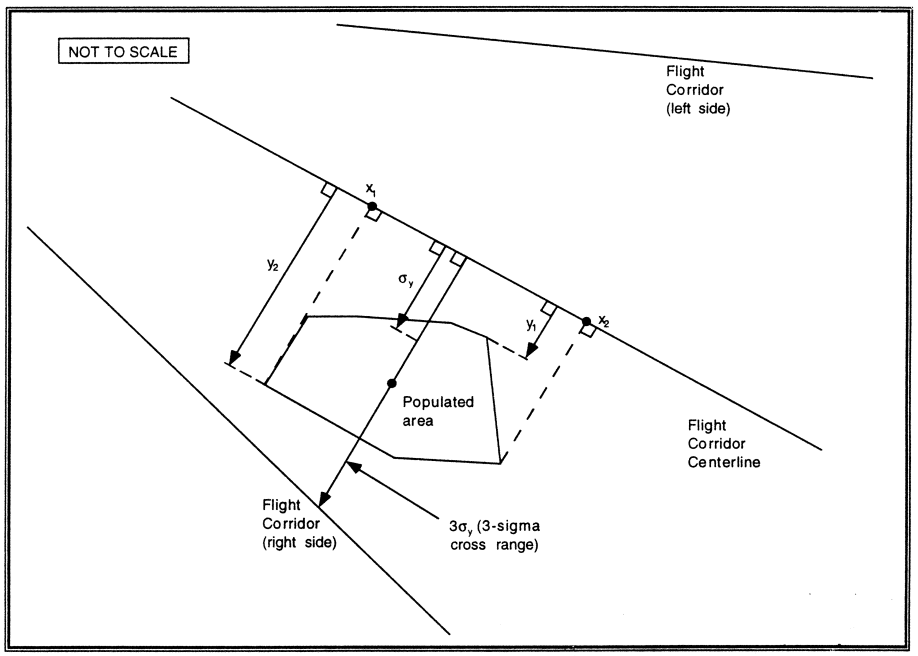

Figure C-1: Analysis of an Appendix A Flight Corridor

(6) Probability of impact computations for a populated area in an appendix B flight corridor. An applicant shall compute P_i using the following method:

(i) For the launch and downrange areas, but not for a final stage impact dispersion area for a guided suborbital launch vehicle, an applicant shall compute P_i for each populated area using the following equation:

$$P_i = \frac{\left(\frac{|y_2 - y_1|}{\sigma_y}\right)}{6\sqrt{2\pi}} \cdot \left(\exp\left(\frac{-\left(y_1/\sigma_y\right)^2}{2}\right) + 4 \cdot \exp\left[\frac{-\left(\frac{y_1 + y_2}{2\sigma_y}\right)^2}{2}\right] + \exp\left(\frac{-\left(y_2/\sigma_y\right)^2}{2}\right)\right) \cdot \left(\frac{P_f}{t} \cdot t_d\right) \qquad \text{(Equation C5)}$$

where:

y_1, y_2 = closest and farthest cross range distance (nm) to a populated area measured from the nominal trajectory IIP ground trace (see figure C–2)

σ_y = one-third of the cross range distance (nm) from nominal trajectory to the flight corridor boundary (see figure C–2)

exp = exponential function (e^x)

P_f = probability of failure = 0.10

t = flight time from lift-off to orbital insertion (seconds)

t_d = overflight dwell time (seconds)

(ii) For each populated area within a final stage impact dispersion area, an applicant shall compute P_i using the following method:

(A) An applicant shall estimate the probability of final stage impact in the x and y sectors of each populated area within the final stage impact dispersion area using equations C6 and C7:

$$P_x = \frac{\left(\frac{|x_2 - x_1|}{\sigma_x}\right)}{6\sqrt{2\pi}} \cdot \left(\exp\left(\frac{-\left(x_1/\sigma_x\right)^2}{2} \right) + 4 \cdot \exp\left[\frac{-\left(\frac{x_1 + x_2}{2\sigma_x}\right)^2}{2} \right] + \exp\left(\frac{-\left(x_2/\sigma_x\right)^2}{2} \right) \right) \qquad \text{(Equation C6)}$$

where:

x_1, x_2 = closest and farthest downrange distance, measured along nominal trajectory IIP ground trace, measured from the nominal impact point to the populated area (see figure C–3)

σ_x = one-third of the impact dispersion radius (see figure C–3)

exp = exponential function (e^x)

$$P_y = \frac{\left(\frac{|y_2 - y_1|}{\sigma_y}\right)}{6\sqrt{2\pi}} \cdot \left(\exp\left(\frac{-\left(y_1/\sigma_y\right)^2}{2} \right) + 4 \cdot \exp\left[\frac{-\left(\frac{y_1 + y_2}{2\sigma_y}\right)^2}{2} \right] + \exp\left(\frac{-\left(y_2/\sigma_y\right)^2}{2} \right) \right) \qquad \text{(Equation C7)}$$

where:

y_1, y_2 = closest and farthest cross range distance to the populated area measured from the nominal trajectory IIP ground trace (see figure C–3)

σ_y = one-third of the impact dispersion radius (see figure C–3)

exp = exponential function (e^x)

(B) If a populated area intersects the impact dispersion area boundary so that the x_2 or y_2 distance would otherwise extend outside the impact dispersion area, the x_2 or y_2 distance should be set equal to the impact dispersion area radius. The x_2 distance for populated area A in figure C–3 is an example. If a populated area intersects the flight azimuth, an applicant shall solve equation C7 by obtaining the solution in two parts. An applicant shall determine, first, the probability between $y_1 = 0$ and $y_2 = a$ and, second, the probability between $y_1 = 0$ and $y_2 = b$, as depicted in figure C–4. The probability P_y is then equal to the sum of the probabilities of the two parts. If a populated area intersects the line that is normal to the flight azimuth on the impact point, an applicant shall solve equation C6 by obtaining the solution in two parts in a similar manner with the values of x.

(C) An applicant shall calculate the probability of impact for each populated area using equation C8 below:

$$P_I = P_s \cdot P_x \cdot P_y \qquad \text{(Equation C8)}$$

where: $P_s = 1 - P_f = 0.90$

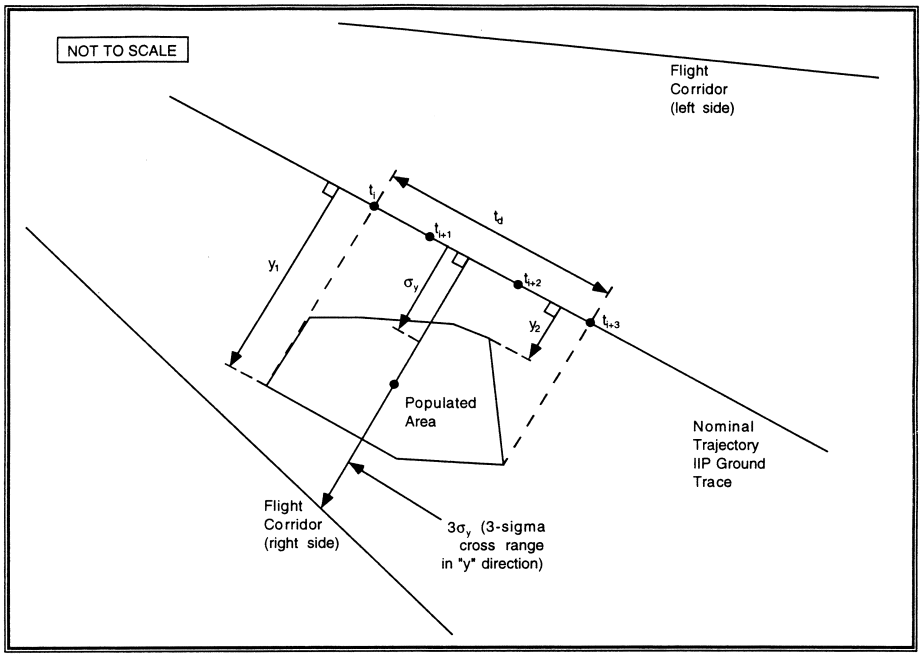

Figure C-2: Analysis of an Appendix B Flight Corridor

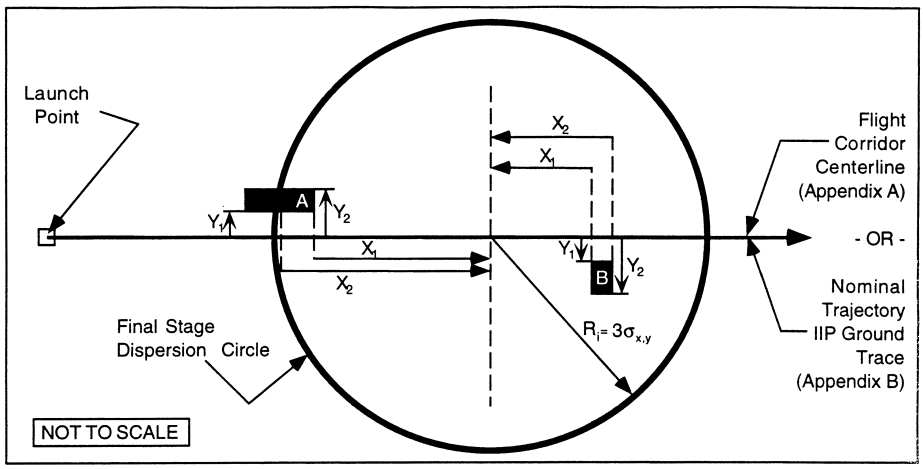

Figure C-3: Appendix A and B Final Stage Impact Risk Analysis

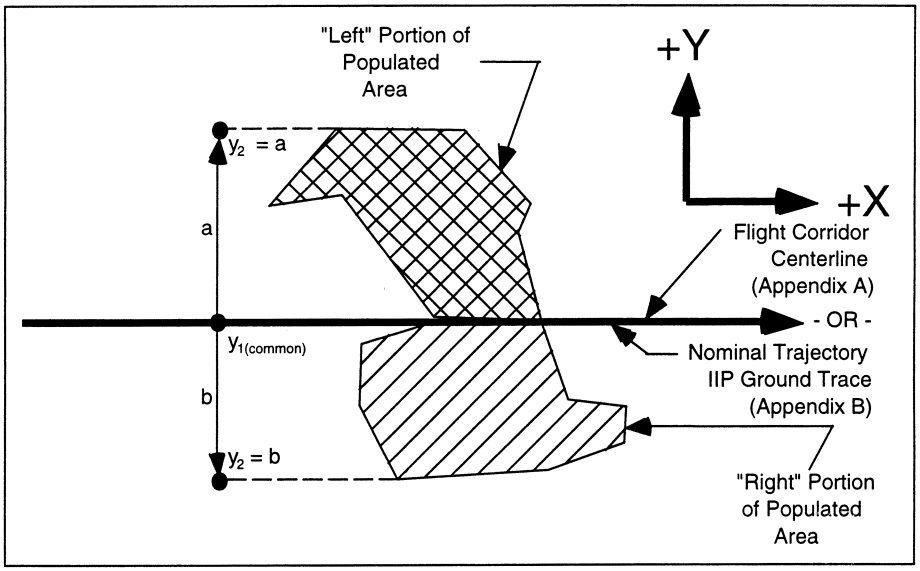

Figure C-4: Flight Azimuth Intersecting a Populated Area

(7) Using the P_i calculated in either subparagraph (c)(5) or (6) of this paragraph, an applicant shall calculate the casualty expectancy for each populated area within the flight corridor in accordance with equation C9. E_{ck} is the casualty expectancy for a given populated area as shown in equation C9, where individual populated areas are designated with the subscript ''k''.

$$E_{ck} = P_i \cdot \left(\frac{A_c}{A_k}\right) \cdot N_k \qquad \text{(Equation C9)}$$

where:

A_c = casualty area (from table C–3)
A_k = populated area
N_k = population in A_k

TABLE C–3—EFFECTIVE CASUALTY AREA (MILES^2) AS A FUNCTION OF IIP RANGE (NM)

IIP Range (nmi)	Orbital launch vehicles				Suborbital launch vehicles
	Small	Medium	Medium large	Large	Guided
0–49	0.43	0.53	0.71	1.94	0.43
50–1749	0.13	0.0022	0.11	0.62	0.13
1750–5000	3.59×10^{-6}	8.3×10^{-4}	1.08×10^{-1}	7.17×10^{-1}	3.59×10^{-6}

(8) An applicant shall estimate the total corridor risk using the following summation of risk:

$$Ec(\text{Corridor}) = \left(\sum_{k=1}^{n} E_{c_k}\right) \qquad \text{(Equation C10)}$$

(9) Alternative casualty expectancy (E_C) analyses. An applicant may employ specified variations to the analysis defined by subparagraphs (c)(1)–(8). Those variations are identified in subparagraphs (9)(i) through (vi) of this paragraph. Subparagraphs (i) through (iv) permit an applicant to make conservative assumptions that would lead to an overestimation of the corridor E_C compared with the analysis defined by subparagraphs (c)(1)–(8). In subparagraphs (v) and (vi), an applicant that would otherwise fail the analysis prescribed by subparagraphs (c)(1)–(8) may avoid (c)(1)–(8)'s overestimation of the probability of impact in each populated area. An applicant employing a variation shall identify the variation used, show and discuss the specific assumptions made to modify the analysis defined by subparagraphs (c)(1)–(8), and demonstrate how each assumption leads to overestimation of the corridor E_C compared with the analysis defined by subparagraphs (c)(1)–(c)(8).

(i) Assume that P_x and P_y have a value of 1.0 for all populated areas.

(ii) Combine populated areas into one or more larger populated areas, and use a population density for the combined area or areas equal to the most densely populated area.

(iii) For any given populated area, assume P_y has a value of one.

(iv) For any given P_x sector (an area spanning the width of a flight corridor and bounded by two time points on the trajectory IIP ground trace) assume P_y has a value of one and use a population density for the sector equal to the most densely populated area.

(v) For a given populated area, divide the populated area into smaller rectangles, determine P_i for each individual rectangle, and sum the individual impact probabilities to determine P_i for the entire populated area.

(vi) For a given populated area, use the ratio of the populated area to the area of the P_i rectangle from the subparagraph (c)(1)–(8) analysis.

(d) Evaluation of Results

(1) If the estimated expected casualty does not exceed 30×10^{-6}, the FAA will approve the launch site location.

(2) If the estimated expected casualty exceeds 30×10^{-6}, then an applicant may either modify its proposal, or, if the flight corridor used was generated by the appendix A method, use the appendix B method to narrow the flight corridor and then perform another appendix C risk analysis.

APPENDIX D TO PART 420—IMPACT DISPERSION AREAS AND CASUALTY EXPECTANCY ESTIMATE FOR AN UNGUIDED SUBORBITAL LAUNCH VEHICLE

(a) Introduction

(1) This appendix provides a method for determining the acceptability of the location of a launch point from which an unguided suborbital launch vehicle would be launched. The appendix describes how to define an overflight exclusion zone and impact dispersion areas, and how to evaluate whether the public risk presented by the launch of an unguided suborbital launch vehicle remains at acceptable levels.

(2) An applicant shall base its analysis on an unguided suborbital launch vehicle whose

final launch vehicle stage apogee represents the intended use of the launch point.

(3) An applicant shall use the apogee of each stage of an existing unguided suborbital launch vehicle with a final launch vehicle stage apogee equal to the one proposed, and calculate each impact range and dispersion area using the equations provided.

(4) This appendix also provides a method for performing an impact risk analysis that estimates the expected casualty (E_c) within each impact dispersion area. This appendix provides an applicant options to simplify the method where population at risk is minimal.

(5) If the estimated E_c is less than or equal to 30×10^{-6}, the FAA will approve the launch point for unguided suborbital launch vehicles. If the estimated E_c exceeds 30×10^{-6}, the proposed launch point will fail the launch site location review.

(b) Data Requirements

(1) An applicant shall employ the apogee of each stage of an existing unguided suborbital launch vehicle whose final stage apogee represents the maximum altitude to be reached by unguided suborbital launch vehicles launched from the launch point. The apogee shall be obtained from one or more actual flights of an unguided suborbital launch vehicle launched at an 84 degree elevation.

(2) An applicant shall satisfy the map and plotting data requirements of appendix A, paragraph (b).

(3) Population data. An applicant shall use total population (N) and the total landmass area within a populated area (A) for all populated areas within an impact dispersion area. Population data up to and including 100 nm from the launch point are required at the U.S. census block group level. Population data downrange from 100 nm are required at no greater than $1° \times 1°$ latitude/longitude grid coordinates.

(c) Overflight Exclusion Zone and Impact Dispersion Areas

(1) An applicant shall choose a flight azimuth from a launch point.

(2) An applicant shall define an overflight exclusion zone as a circle with a radius of 1600 feet centered on the launch point.

(3) An applicant shall define an impact dispersion area for each stage of the suborbital launch vehicle chosen in accordance with subparagraph (b)(1) in accordance with the following:

(i) An applicant shall calculate the impact range for the final launch vehicle stage (D_n). An applicant shall set D_n equal to the last stage apogee altitude (H_n) multiplied by an impact range factor [$IP(H_n)$] in accordance with the following:

$$D_n = H_n \cdot IP(H_n) \qquad \text{(Equation D1)}$$

where:

$IP(H_n)$ = 0.4 for an apogee less than 100 km, and

$IP(H_n)$ = 0.7 for an apogee of 100 km or greater.

(ii) An applicant shall calculate the impact range for each intermediate stage (D_i), where $i \varepsilon \{1, 2, 3, \ldots (n-1)\}$, and where n is the total number of launch vehicle stages. Using the apogee altitude (H_i) of each intermediate stage, an applicant shall use equation D1 to compute the impact range of each stage by substituting H_i for H_n. An applicant shall use the impact range factors provided by equation D1.

(iii) An applicant shall calculate the impact dispersion radius for the final launch vehicle stage (R_n). An applicant shall set R_n equal to the last stage apogee altitude (H_n) multiplied by an impact dispersion factor [$DISP(H_n)$] in accordance with the following:

$$R_n = H_n \cdot DISP(H_n) \qquad \text{(Equation D2)}$$

where:

$DISP(H_n)$ = 0.4 for an apogee less than 100 km, and

DISP(Hn) = 0.7 for an apogee of 100 km or greater.

(iv) An applicant shall calculate the impact dispersion radius for each intermediate stage (R_i), where $i \varepsilon \{1, 2, 3, \ldots (n-1)\}$ and where n is the total number of launch vehicle stages. Using the apogee altitude (H_i) of each intermediate stage, an applicant shall use equation D2 to compute an impact dispersion radius of each stage by substituting H_i for H_n. An applicant shall use the dispersion factors provided by equation D2.

(4) An applicant shall display an overflight exclusion zone, each intermediate and final stage impact point (D_i through D_n), and each impact dispersion area for the intermediate and final launch vehicle stages on maps in accordance with paragraph (b)(2).

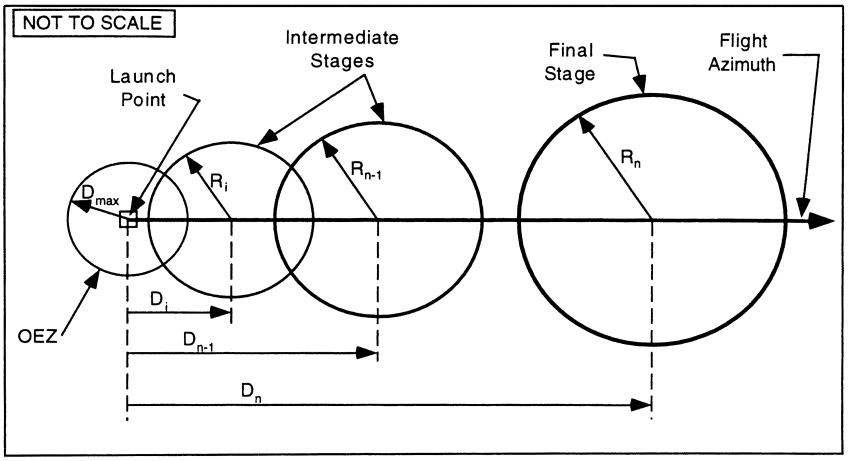

Figure D-1
Unguided Suborbital Launch Vehicle Overflight Exclusion Zone and Impact Dispersion Areas

(d) Evaluate the Overflight Exclusion Zone and Impact Dispersion Areas

(1) An applicant shall evaluate the overflight exclusion zone and each impact dispersion area for the presence of any populated areas. If an applicant determines that no populated area is located within the overflight exclusion zone or any impact dispersion area, then no additional steps are necessary.

(2) If a populated area is located in an overflight exclusion zone, an applicant may modify its proposal or demonstrate that there are times when no people are present or that the applicant has an agreement in place to evacuate the public from the overflight exclusion zone during a launch.

(3) If a populated area is located within any impact dispersion area, an applicant may modify its proposal and define a new overflight exclusion zone and new impact dispersion areas, or perform an impact risk analysis in accordance with paragraph (e).

(e) Impact Risk Analysis

(1) An applicant shall estimate the expected average number of casualties, E_C, within the impact dispersion areas according to the following method:

(i) An applicant shall calculate the E_c by summing the impact risk for the impact dispersion areas of the final launch vehicle stage and all intermediate stages. An applicant shall estimate E_c for the impact dispersion area of each stage by using equations D3 through D7 for each of the populated areas located within the impact dispersion areas.

(ii) An applicant shall estimate the probability of impacting inside the X and Y sectors of each populated area within each impact dispersion area using equations D3 and D4:

$$P_x = \frac{\left(\frac{x_2}{\sigma_x} - \frac{x_1}{\sigma_x}\right)}{6\sqrt{2\pi}} \cdot \left(\exp\left(\frac{-\left(\frac{x_1}{\sigma_x}\right)^2}{2} \right) + 4 \cdot \exp\left[\frac{-\left(\frac{x_1 + x_2}{2\sigma_x}\right)^2}{2} \right] + \exp\left(\frac{-\left(\frac{x_2}{\sigma_x}\right)^2}{2} \right) \right) \qquad \text{(Equation D3)}$$

where:

x_1, x_2 = closest and farthest downrange distance to populated area (see figure D–2)

σ_x = one-third of the impact dispersion radius (see figure D–2)

exp = exponential function (e^x)

$$P_y = \frac{\left(\frac{|y_2|}{\sigma_y} - \frac{|y_1|}{\sigma_y}\right)}{6\sqrt{2\pi}} \cdot \left(\exp\left(\frac{-\left(y_1/\sigma_y\right)^2}{2}\right) + 4 \cdot \exp\left[\frac{-\left(\frac{y_1 + y_2}{2\sigma_y}\right)^2}{2}\right] + \exp\left(\frac{-\left(y_2/\sigma_y\right)^2}{2}\right)\right) \quad \text{(Equation D4)}$$

where:

y_1, y_2 = closest and farthest cross range distance to the populated area (see figure D–2)

σ_y = one-third of the impact dispersion radius (see figure D–2)

exp = exponential function (e^x)

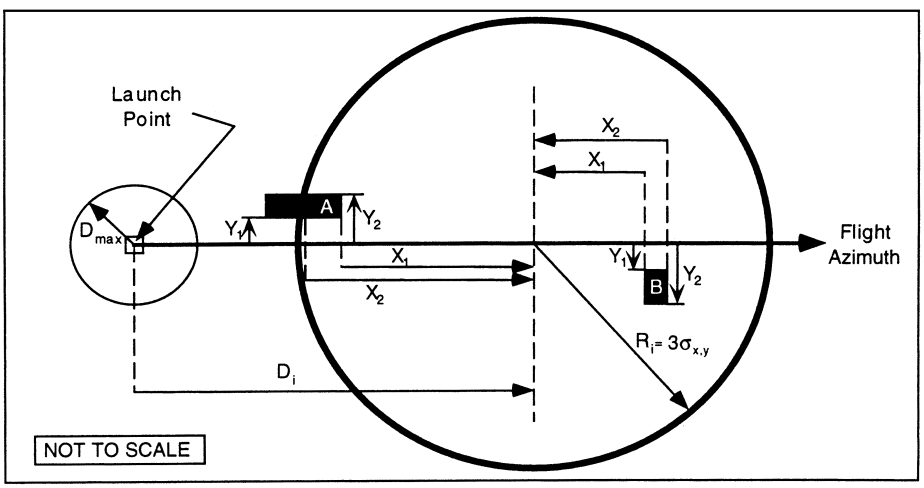

Figure D-2
Intermediate and Final Stage Impact Risk Analysis

(iii) If a populated area intersects the impact dispersion area boundary so that the x_2 or y_2 distance would otherwise extend outside the impact dispersion area, the x_2 or y_2 distance should be set equal to the impact dispersion area radius. The x_2 distance for populated area A in figure D–2 is an example.

(iv) If a populated area intersects the flight azimuth, an applicant shall solve equation D4 by obtaining the solution in two parts. An applicant shall determine, first, the probability between $y_1 = 0$ and $y_2 = a$ and, second, the probability between $y_1 = 0$ and $y_2 = b$, as depicted in figure D–3. The probability P_y is then equal to the sum of the probabilities of the two parts. If a populated area intersects the line that is normal to the flight azimuth on the impact point, an applicant shall solve equation D3 by obtaining the solution in two parts in the same manner as with the values of x.

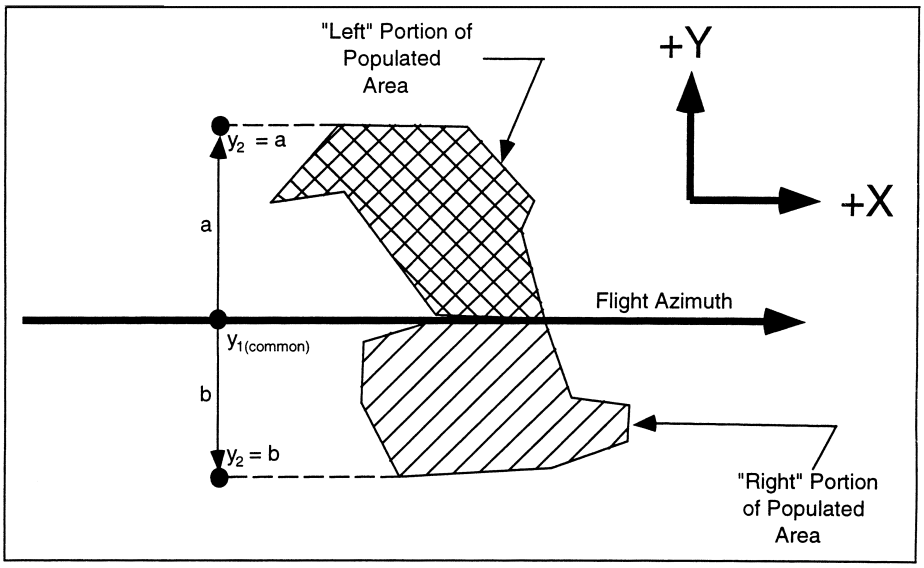

Figure D-3
Flight Azimuth Intersecting a Populated Area

(v) An applicant shall calculate the probability of impact (P_i) for each populated area using the following equation:

$$P_i = P_s \cdot P_x \cdot P_y \qquad \text{(Equation D5)}$$

where:

P_s = probability of success = 0.98

(vi) An applicant shall calculate the casualty expectancy for each populated area. E_{ck} is the casualty expectancy for a given populated area as shown in equation D6, where individual populated areas are designated with the subscript ''k''.

$$E_{ck} = P_i \cdot \left(\frac{A_c}{A_k}\right) \cdot N_k \qquad \text{(Equation D6)}$$

where:

$k \in \{1, 2, 3, \ldots, n\}$
A_c = casualty area (from table D–1)
A_k = populated area
N_k = population in A_k

TABLE D–1—EFFECTIVE CASUALTY AREA (A_c) VS. IMPACT RANGE

Impact range (nm)	Effective casualty area (miles^2)
0–4	9×10^{-3}
5–49	9×10^{-3}
50–1,749	1.1×10^{-5}
1,750–4,999	3.6×10^{-6}
5,000–more	3.6×10^{-6}

(vii) An applicant shall estimate the total risk using the following summation of risk:

$$Ec(Corridor) = \left(\sum_{k=1}^{n} E_{c_k} \right) \qquad \text{(Equation D7)}$$

(viii) Alternative casualty expectancy (E_c) analysis. An applicant may employ specified variations to the analysis defined by subparagraphs (d)(1)(i)–(vii). Those variations are identified in subparagraphs (viii)(A) through (F) of this paragraph. Subparagraphs (A) through (D) permit an applicant to make conservative assumptions that would lead to an overestimation of E_c compared with the analysis defined by subparagraphs (d)(1)(i)–(vii). In subparagraphs (E) and (F), an applicant that would otherwise fail the analysis prescribed by subparagraphs (d)(1)(i)–(vii) may avoid (d)(1)(i)–(vii)'s overestimation of the probability of impact in each populated area. An applicant employing a variation shall identify the variation used, show and discuss the specific assumptions made to modify the analysis defined by subparagraphs (d)(1)(i)–(vii), and demonstrate how each assumption leads to overestimation of the corridor E_c compared with the analysis defined by subparagraphs (d)(1)(i)–(vii).

(A) Assume that P_x and P_y have a value of 1.0 for all populated areas.

(B) Combine populated areas into one or more larger populated areas, and use a population density for the combined area or areas equal to the most densely populated area.

(C) For any given populated area, assume P_x has a value of one.

(D) For any given populated area, assume P_y has a value of one.

(E) For a given populated area, divide the populated area into smaller rectangles, determine P_i for each individual rectangle, and sum the individual impact probabilities to determine P_i for the entire populated area.

(F) For a given populated area, use the ratio of the populated area to the area of the P_i rectangle used in the subparagraph (d)(1)(i)–(vii) analysis.

(2) If the estimated expected casualty does not exceed 30×10^{-6}, the FAA will approve the launch point.

(3) If the estimated expected casualty exceeds 30×10^{-6}, then an applicant may modify its proposal and then repeat the impact risk analysis in accordance with this appendix D. If no set of impact dispersion areas exist which satisfy the FAA's risk threshold, the applicant's proposed launch site will fail the launch site location review.

APPENDIX E TO PART 420—TABLES FOR EXPLOSIVE SITE PLAN

TABLE E–1—QUANTITY DISTANCE REQUIREMENTS FOR SOLID EXPLOSIVES

Quantity (lbs.) (over)	Quantity (lbs.) (not over)	Public area distance (ft.) for division 1.1	Public area distance (ft.) for division 1.3	Intraline distance (ft.) for division 1.1	Intraline distance (ft.) for division 1.3
0	1,000	1,250	75	$D = 18\ W^{1/3}$	50
1,000	5,000		115		75
5,000	10,000		150		100
10,000	20,000		190		125
20,000	30,000		215		145
30,000	40,000	$D = 40\ W^{1/3}$	235		155
40,000	50,000		250		165
50,000	60,000		260		175
60,000	70,000		270		185
70,000	80,000		280		190
80,000	90,000		195		195
90,000	100,000		300		200
100,000	200,000	$D=2.42\ W^{0.577}$	375		250
200,000	250,000		413		275
250,000	300,000	$D = 50\ W^{1/3}$	450		300
300,000	400,000		525		350
400,000	500,000		600		400
500,000	1,000,000		800		500
Greater than 1,000,000		$D = 50\ W^{1/3}$	$D = 8\ W^{1/3}$	$D = 5\ W^{1/3}$	

"D" equals the minimum separation distance in feet.
"W" equals the NEW of propellant.

TABLE E–2—LIQUID PROPELLANT EXPLOSIVE EQUIVALENTS

Propellant combinations	Explosive equivalent
LO_2/LH_2	The larger of: $8W^{2/3}$ where W is the weight of LO_2/LH_2, or 14% of W.
LO_2/LH_2 + LO_2/RP–1	Sum of (20% for LO_2/RP–1) + the larger of: $8W^{2/3}$ where W is the weight of LO_2/LH_2, or 14% of W.
LO_2/R–1	20% of W up to 500,000 pounds plus 10% of W over 500,000 pounds, where W is the weight of LO_2RP–1.
N_2O_4/N_2H_4 (or UDMH or UDMH/N_2H_4 Mixture)	10% of W, where W is the weight of the propellant.

TABLE E–3—PROPELLANT HAZARD AND COMPATIBILITY GROUPINGS AND FACTORS TO BE USED WHEN CONVERTING GALLONS OF PROPELLANT INTO POUNDS

Propellant	Hazard group	Compatibility group	Pounds/ gallon	At temperature °F
Hydrogen Peroxide	II	A	11.6	68
Hydrazine	III	C	8.4	68
Liquid Hydrogen	III	C	0.59	−423
Liquid Oxygen	II	A	9.5	−297
Nitrogen Tetroxide	I	A	12.1	68
RP–1	I	C	6.8	68
UDMH	III	C	6.6	68
UDMH/Hydrazine	III	C	7.5	68

TABLE E–4—HAZARD GROUP I

Pounds of propellant		Public area and incompatible	Intragroup and compatible	Pounds of propellant		Public area and incompatible	Intragroup and compatible
Over	Not over	Distance in feet	Distance in feet	Over	Not over	Distance in feet	Distance in feet
0	100	30	25	5,000	6,000	80	60
100	200	35	30	6,000	7,000	85	65
200	300	40	35	7,000	8,000	85	65
300	400	45	35	8,000	9,000	90	70
400	500	50	40	9,000	10,000	90	70
500	600	50	40	10,000	15,000	95	75
600	700	55	40	15,000	20,000	100	80
700	800	55	45	20,000	25,000	105	80
800	900	60	45	25,000	30,000	110	85
900	1,000	60	45	30,000	35,000	110	85
1,000	2,000	65	50	35,000	40,000	115	85
2,000	3,000	70	55	40,000	45,000	120	90
3,000	4,000	75	55	45,000	50,000	120	90
4,000	5,000	80	60	50,000	60,000	125	95
60,000	70,000	130	95	500,000	600,000	185	140
70,000	80,000	130	100	600,000	700,000	190	145
80,000	90,000	135	100	700,000	800,000	195	150
90,000	100,000	135	105	800,000	900,000	200	150
100,000	125,000	140	110	900,000	1,000,000	205	155
125,000	150,000	145	110	1,000,000	2,000,000	235	175
150,000	175,000	150	115	2,000,000	3,000,000	255	190
175,000	200,000	155	115	3,000,000	4,000,000	265	200
200,000	250,000	160	120	4,000,000	5,000,000	275	210
250,000	300,000	165	125	5,000,000	6,000,000	285	215
300,000	350,000	170	130	6,000,000	7,000,000	295	220
350,000	400,000	175	130	7,000,000	8,000,000	300	225
400,000	450,000	180	135	8,000,000	9,000,000	305	230
450,000	500,000	180	135	9,000,000	10,000,000	310	235

TABLE E–5—HAZARD GROUP II

Pounds of propellant		Public area and incompatible	Intragroup and compatible	Pounds of propellant		Public area and incompatible	Intragroup and compatible
Over	Not over	Distance in feet	Distance in feet	Over	Not over	Distance in feet	Distance in feet
0	100	60	30	50,000	60,000	250	125
100	200	75	35	60,000	70,000	255	130
200	300	85	40	70,000	80,000	260	130
300	400	90	45	80,000	90,000	265	135
400	500	100	50	90,000	100,000	270	135
500	600	100	50	100,000	125,000	285	140
600	700	105	55	125,000	150,000	295	145
700	800	110	55	150,000	175,000	305	150
800	900	115	60	175,000	200,000	310	155
900	1,000	120	60	200,000	250,000	320	160
1,000	2,000	130	65	250,000	300,000	330	165
2,000	3,000	145	70	300,000	350,000	340	170
3,000	4,000	150	75	350,000	400,000	350	175
4,000	5,000	160	80	400,000	450,000	355	180
5,000	6,000	165	80	450,000	500,000	360	180
6,000	7,000	170	85	500,000	600,000	375	185
7,000	8,000	175	85	600,000	700,000	385	190
8,000	9,000	175	90	700,000	800,000	395	195
9,000	10,000	180	90	800,000	900,000	405	200
10,000	15,000	195	95	900,000	1,000,000	410	205
15,000	20,000	205	100	1,000,000	2,000,000	470	235
20,000	25,000	215	105	2,000,000	3,000,000	505	255
25,000	30,000	220	110	3,000,000	4,000,000	535	265
30,000	35,000	225	110	4,000,000	5,000,000	555	275
35,000	40,000	230	115	5,000,000	6,000,000	570	285
40,000	45,000	235	120	6,000,000	7,000,000	585	295
45,000	50,000	240	120	7,000,000	8,000,000	600	300
				8,000,000	9,000,000	610	305
				9,000,000	10,000,000	620	310

TABLE E–6—HAZARD GROUP III

Pounds of propellant		Public area and incompatible	Intragroup and compatible	Pounds of propellant		Public area and incompatible	Intragroup and compatible
Over	Not over	Distance in feet	Distance in feet	Over	Not over	Distance in feet	Distance in feet
0	100	600	30	60,000	70,000	1,200	130
100	200	600	35	70,000	80,000	1,200	130
200	300	600	40	80,000	90,000	1,200	135
300	400	600	45	90,000	100,000	1,200	135
400	500	600	50	100,000	125,000	1,800	140
500	600	600	50	125,000	150,000	1,800	145
600	700	600	55	150,000	175,000	1,800	150
700	800	600	55	175,000	200,000	1,800	155
800	900	600	60	200,000	250,000	1,800	160
900	1,000	600	60	250,000	300,000	1,800	165
1,000	2,000	600	65	300,000	350,000	1,800	170
2,000	3,000	600	70	350,000	400,000	1,800	175
3,000	4,000	600	75	400,000	450,000	1,800	180
4,000	5,000	600	80	450,000	500,000	1,800	180
5,000	6,000	600	80	500,000	600,000	1,800	185
6,000	7,000	600	85	600,000	700,000	1,800	190
7,000	8,000	600	85	700,000	800,000	1,800	195
8,000	9,000	600	90	800,000	900,000	1,800	200
9,000	10,000	600	90	900,000	1,000,000	1,800	205
10,000	15,000	1,200	95	1,000,000	2,000,000	1,800	235
15,000	20,000	1,200	100	2,000,000	3,000,000	1,800	255
20,000	25,000	1,200	105	3,000,000	4,000,000	1,800	265
25,000	30,000	1,200	110	4,000,000	5,000,000	1,800	275
30,000	35,000	1,200	110	5,000,000	6,000,000	1,800	285
35,000	40,000	1,200	115	6,000,000	7,000,000	1,800	295
40,000	45,000	1,200	120	7,000,000	8,000,000	1,800	300
45,000	50,000	1,200	120	8,000,000	9,000,000	1,800	305
50,000	60,000	1,200	125	9,000,000	10,000,000	1,800	310

TABLE E–7—DISTANCES WHEN EXPLOSIVE EQUIVALENTS APPLY

TNT equivalent weight of propellants	Distance in feet	
Not over	To public area	Intraline unbarricaded
100	1250	80
200	1250	100
300	1250	120
400	1250	130
500	1250	140
600	1250	150
700	1250	160
800	1250	170
900	1250	180
1,000	1250	190
1,500	1250	210
2,000	1250	230
3,000	1250	260
4,000	1250	280
5,000	1250	300
6,000	1250	320
7,000	1250	340
8,000	1250	360
9,000	1250	380
10,000	1250	400
15,000	1250	450
20,000	1250	490
25,000	1,250	530
30,000	1,250	560
35,000	1,310	590
40,000	1,370	620
45,000	1,425	640
50,000	1,475	660
55,000	1,520	680
60,000	1,565	700
65,000	1,610	720
70,000	1,650	740
75,000	1,685	770
80,000	1,725	780
85,000	1,760	790
90,000	1,795	800
95,000	1,825	820
100,000	1,855	830
125,000	2,115	900
150,000	2,350	950
175,000	2,565	1,000
200,000	2,770	1,050

PARTS 421–430 [RESERVED]

PART 431—LAUNCH AND REENTRY OF A REUSABLE LAUNCH VEHICLE (RLV)

Subpart A—General

Sec.
431.1 Scope.
431.3 Types of reusable launch vehicle mission licenses.
431.5 Policy and safety approvals.
431.7 Payload and payload reentry determinations.
431.9 Issuance of a reusable launch vehicle mission license.
431.11 Additional license terms and conditions.
431.13 Transfer of a reusable launch vehicle mission license.
431.15 Rights not conferred by a reusable launch vehicle mission license.
431.16–431.20 [Reserved]

Subpart B—Policy Review and Approval for Launch and Reentry of a Reusable Launch Vehicle

431.21 General.
431.23 Policy review.
431.25 Application requirements for policy review.
431.27 Denial of policy approval.
431.28–431.30 [Reserved]

Subpart C—Safety Review and Approval for Launch and Reentry of a Reusable Launch Vehicle

431.31 General.
431.33 Safety organization.
431.35 Acceptable reusable launch vehicle mission risk.
431.37 Mission readiness.
431.39 Mission rules, procedures, contingency plans, and checklists.
431.41 Communications plan.
431.43 Reusable launch vehicle mission operational requirements and restrictions.
431.45 Mishap investigation plan and emergency response plan.
431.47 Denial of safety approval.
431.48–431.50 [Reserved]

Subpart D—Payload Reentry Review and Determination

431.51 General.
431.53 Classes of payloads.
431.55 Payload reentry review.
431.57 Information requirements for payload reentry review.
431.59 Issuance of payload reentry determination.
431.61 Incorporation of payload reentry determination in license application.
431.62–431.70 [Reserved]

Subpart E—Post-Licensing Requirements—Reusable Launch Vehicle Mission License Terms and Conditions

431.71 Public safety responsibility.
431.73 Continuing accuracy of license application; application for modification of license.
431.75 Agreements.
431.77 Records.
431.79 Reusable launch vehicle mission reporting requirements.
431.81 Financial responsibility requirements.
431.83 Compliance monitoring.
431.85 Registration of space objects.
431.86–431.90 [Reserved]

Subpart F—Environmental Review

431.91 General.
431.93 Environmental information.

AUTHORITY: 49 U.S.C. 70101–70121.

SOURCE: Docket No. FAA–1999–5535, 65 FR 56658, Sept. 19, 2000, unless otherwise noted.

Subpart A—General

§ 431.1 Scope.

This part prescribes requirements for obtaining a reusable launch vehicle (RLV) mission license and post-licensing requirements with which a licensee must comply to remain licensed. Requirements for preparing a license application are contained in part 413 of this subchapter.

§ 431.3 Types of reusable launch vehicle mission licenses.

(a) *Mission-specific license.* A mission-specific license authorizing an RLV mission authorizes a licensee to launch and reenter, or otherwise land, one model or type of RLV from a launch site approved for the mission to a reentry site or other location approved for the mission. A mission-specific license authorizing an RLV mission may authorize more than one RLV mission and identifies each flight of an RLV authorized under the license. A licensee's authorization to conduct RLV missions terminates upon completion of all activities authorized by the license or the expiration date stated in the reentry license, whichever occurs first.

(b) *Operator license.* An operator license for RLV missions authorizes a licensee to launch and reenter, or otherwise land, any of a designated family of RLVs within authorized parameters, including launch sites and trajectories, transporting specified classes of payloads to any reentry site or other location designated in the license. An operator license for RLV missions is valid for a two-year renewable term.

§ 431.5 Policy and safety approvals.

To obtain either type of RLV mission license, an applicant must obtain policy and safety approvals from the FAA. Requirements for obtaining these approvals are contained in subparts B and C of this part. Only the license applicant may apply for the approvals, and may apply for either approval separately and in advance of submitting a complete license application, using the application procedures contained in part 413 of this subchapter.

§ 431.7 Payload and payload reentry determinations.

(a) A payload determination is required to launch a payload unless the proposed payload is exempt from payload review under § 415.53 of this chapter. Requirements for obtaining a payload determination are set forth in part 415, subpart D of this chapter.

(b) A payload reentry determination is required to reenter a payload to Earth on an RLV unless the proposed payload is exempt from payload reentry review.

(c) A payload reentry determination made under a previous license application under this subchapter may satisfy the requirements of paragraph (b) of this section.

(d) The FAA conducts a review, as described in subpart D of this part, to make a payload reentry determination. Either an RLV mission license applicant or a payload owner or operator may request a review of the proposed payload using the application procedures contained in part 413 of this subchapter. Upon receipt of an application, the FAA may conduct a payload reentry review independently of an RLV mission license application.

§ 431.9 Issuance of a reusable launch vehicle mission license.

(a) The FAA issues either a mission-specific or operator license authorizing RLV missions to an applicant who has obtained all approvals and determinations required under this chapter for the license.

(b) An RLV mission license authorizes a licensee to launch and reenter, or otherwise land, an RLV and payload, if any, in accordance with the representations contained in the licensee's application, subject to the licensee's compliance with terms and conditions contained in license orders accompanying the license, including financial responsibility requirements.

§ 431.11 Additional license terms and conditions.

The FAA may amend an RLV mission license at any time by modifying or adding license terms and conditions to ensure compliance with 49 U.S.C. Subtitle IX, chapter 701, and applicable regulations.

§ 431.13 Transfer of a reusable launch vehicle mission license.

(a) Only the FAA may transfer an RLV mission license.

(b) An applicant for transfer of an RLV mission license shall submit a license application in accordance with part 413 of this subchapter and satisfy the applicable requirements of this part. The FAA will transfer an RLV mission license to an applicant who has obtained all of the approvals and determinations required under this chapter for an RLV mission license. In conducting its reviews and issuing approvals and determinations, the FAA may incorporate any findings made part of the record to support the initial licensing determination. The FAA may modify an RLV mission license to reflect any changes necessary as a result of a license transfer.

§ 431.15 Rights not conferred by a reusable launch vehicle mission license.

Issuance of an RLV mission license does not relieve a licensee of its obligation to comply with requirements of law that may apply to its activities.

§§ 431.16–431.20 [Reserved]

Subpart B—Policy Review and Approval for Launch and Reentry of a Reusable Launch Vehicle

§ 431.21 General.

The FAA issues a policy approval to an RLV mission license applicant upon completion of a favorable policy review. A policy approval is part of the licensing record on which the licensing determination is based.

§ 431.23 Policy review.

(a) The FAA reviews an RLV mission license application to determine whether the proposed mission presents any issues, other than those issues addressed in the safety review, that would adversely affect U.S. national security or foreign policy interests, would jeopardize public health and safety or the safety of property, or would not be consistent with international obligations of the United States.

(b) Interagency consultation is conducted as follows:

(1) The FAA consults with the Department of Defense to determine whether an RLV mission license application presents any issues adversely affecting U.S. national security.

(2) The FAA consults with the Department of State to determine whether an RLV mission license application presents any issues adversely affecting U.S. foreign policy interests or international obligations.

(3) The FAA consults with other Federal agencies, including the National Aeronautics and Space Administration, authorized to address issues identified under paragraph (a) of this section, associated with an applicant's RLV mission proposal.

(c) The FAA advises an applicant, in writing, of any issue raised during a policy review that would impede issuance of a policy approval. The applicant may respond, in writing, or revise its license application.

§ 431.25 Application requirements for policy review.

In its RLV mission license application, an applicant must—

(a) Identify the model, type, and configuration of any RLV proposed for launch and reentry, or otherwise landing on Earth, by the applicant.

(b) Identify all vehicle systems, including structural, thermal, pneumatic, propulsion, electrical, and avionics and guidance systems used in the vehicle(s), and all propellants.

(c) Identify foreign ownership of the applicant as follows:

(1) For a sole proprietorship or partnership, identify all foreign ownership;

(2) For a corporation, identify any foreign ownership interests of 10% or more; and

(3) For a joint venture, association, or other entity, identify any participating foreign entities.

(d) Identify proposed launch and reentry flight profile(s), including—

(1) Launch and reentry site(s), including planned contingency abort locations, if any;

(2) Flight trajectories, reentry trajectories, associated ground tracks, and instantaneous impact points for nominal operations, and contingency abort profiles, if any;

(3) Sequence of planned events or maneuvers during the mission; and for an orbital mission, the range of intermediate and final orbits of the vehicle and upper stages, if any, and their estimated orbital life times.

§ 431.27 Denial of policy approval.

The FAA notifies an applicant, in writing, if the FAA has denied policy approval for an RLV mission license application. The notice states the reasons for the FAA's determination. The applicant may respond to the reasons for the determination and request reconsideration.

§§ 431.28–431.30 [Reserved]

Subpart C—Safety Review and Approval for Launch and Reentry of a Reusable Launch Vehicle

§ 431.31 General.

(a) The FAA conducts a safety review to determine whether an applicant is capable of launching an RLV and payload, if any, from a designated launch site, and reentering the RLV and payload, if any, to a designated reentry site or location, or otherwise landing it on Earth, without jeopardizing public health and safety and the safety of property.

(b) The FAA issues a safety approval to an RLV mission license applicant that satisfies the requirements of this Subpart. The FAA evaluates on an individual basis all public safety aspects of a proposed RLV mission to ensure they are sufficient to support safe conduct of the mission. A safety approval is part of the licensing record on which the FAA's licensing determination is based.

(c) The FAA advises an applicant, in writing, of any issue raised during a safety review that would impede issuance of a safety approval. The applicant may respond, in writing, or revise its license application.

§ 431.33 Safety organization.

(a) An applicant shall maintain a safety organization and document it by identifying lines of communication and approval authority for all mission decisions that may affect public safety. Lines of communication within the applicant's organization, between the applicant and the launch site, and between the applicant and the reentry site, shall be employed to ensure that personnel perform RLV mission operations in accordance with plans and procedures required by this subpart. Approval authority shall be employed to ensure compliance with terms and conditions stated in an RLV mission license and with the plans and procedures required by this subpart.

(b) An applicant must designate a person responsible for the conduct of all licensed RLV mission activities.

(c) An applicant shall designate by name, title, and qualifications, a qualified safety official authorized by the applicant to examine all aspects of the applicant's operations with respect to safety of RLV mission activities and to monitor independently compliance by vehicle safety operations personnel with the applicant's safety policies and procedures. The safety official shall report directly to the person responsible for an applicant's licensed RLV mission activities, who shall ensure that all of the safety official's concerns are addressed both before a mission is initiated and before reentry or descent flight of an RLV is initiated. The safety official is responsible for—

(1) Monitoring and evaluating operational dress rehearsals to ensure they are conducted in accordance with procedures required by § 431.37(a)(4) and under § 431.37(a)(1)(iv) to ensure the readiness of vehicle safety operations personnel to conduct a safe mission under nominal and non-nominal conditions; and

(2) Completing a mission readiness determination as required by § 431.37 before an RLV mission is initiated. The

safety official must monitor and report to the person responsible for the conduct of licensed RLV mission activities any non-compliance with procedures listed in §§ 431.37 and 431.43, or any representation contained in the application, and the readiness of the licensee to conduct mission operations in accordance with the license and this part. The safety official is responsible for compliance with §§ 431.37 and 431.43, and with representations contained in the application.

§ 431.35 Acceptable reusable launch vehicle mission risk.

(a) To obtain safety approval for an RLV mission, an applicant must demonstrate that the proposed mission does not exceed acceptable risk as defined in this subpart. For purposes of this section, the mission commences upon initiation of the launch phase of flight and consists of launch flight through orbital insertion of an RLV or vehicle stage or flight to outer space, whichever is applicable, and reentry or descent flight, and concludes upon landing on Earth of the RLV.

(b) Acceptable risk for a proposed mission is measured in terms of the expected average number of casualties (E_c).

(1) To obtain safety approval, an applicant shall demonstrate:

(i) For public risk, the risk level to the collective members of the public exposed to vehicle or vehicle debris impact hazards associated with a proposed mission does not exceed an expected average number of 0.00003 casualties per mission (or E_c criterion of 30×10^{-6}) to members of the public from the applicant's proposed activity; and

(ii) For public risk, the risk level to an individual does not exceed .000001 per mission (or individual risk criterion of 1×10^{-6}).

(2) [Reserved]

(c) To demonstrate compliance with acceptable risk criteria in this section, an applicant shall employ a system safety process to identify the hazards and assess the risks to public health and safety and the safety of property associated with the mission, including nominal and non-nominal operation and flight of the vehicle and payload, if any. An acceptable system safety analysis identifies and assesses the probability and consequences of any reasonably foreseeable hazardous event, and safety-critical system failures during launch flight or reentry that could result in a casualty to the public.

(d) As part of the demonstration required under paragraph (c) of this section, an applicant must—

(1) Identify and describe the structure of the RLV, including physical dimensions and weight;

(2) Identify and describe any hazardous materials, including radioactive materials, and their container on the RLV;

(3) Identify and describe safety-critical systems;

(4) Identify and describe all safety-critical failure modes and their consequences;

(5) Provide drawings and schematics for eachsafety-critical system identified under paragraph (d)(3) of this section;

(6) Provide a timeline identifying all safety-critical events;

(7) Provide data that validates the applicant's system safety analyses required in paragraph (c) of this section; and

(8) Provide flight trajectory analyses covering launch or ascent of the vehicle through orbital insertion and reentry or descent of the vehicle through landing, including its three-sigma dispersion.

§ 431.37 Mission readiness.

(a) *Mission readiness requirements.* An applicant shall submit the following procedures for verifying mission readiness:

(1) Mission readiness review procedures that involve the applicant's vehicle safety operations personnel, and launch site and reentry site personnel involved in the mission. The procedures shall ensure a mission readiness review is conducted during which the designated individual responsible for the conduct of licensed activities under § 431.33(b) is provided with the following information to make a judgment as to mission readiness—

(i) Readiness of the RLV including safety-critical systems and payload for launch and reentry flight;

(ii) Readiness of the launch site, personnel, and safety-related launch property and launch services to be provided by the launch site;

(iii) Readiness of the reentry site, personnel, and safety-related property and services for reentry flight and vehicle recovery;

(iv) Readiness of vehicle safety operations personnel to support mission flight, including results of dress rehearsals and simulations conducted in accordance with paragraph (a)(4) of this section;

(v) Mission rules and constraints, including contingency abort plans and procedures, if any, as required under § 431.39;

(vi) Unresolved safety issues identified during the mission readiness review and plans for addressing them; and

(vii) Any additional safety information required by the individual designated under § 431.33(b) to determine launch and reentry readiness.

(2) Procedures that ensure mission constraints, rules, contingency abort and emergency abort procedures are listed and consolidated in a safety directive or notebook approved by the person designated by the applicant under § 431.33(b), the launch site operator, and the reentry site operator, if any;

(3) Procedures that ensure currency and consistency of licensee, launch site operator, and reentry site operator checklists;

(4) Dress rehearsal procedures that—

(i) Ensure crew readiness under nominal and non-nominal flight conditions;

(ii) Contain criteria for determining whether to dispense with or add one or more dress rehearsals; and

(iii) Verify currency and consistency of licensee, launch site operator, and reentry site operator checklists; and

(5) Procedures for ensuring the licensee's vehicle safety operations personnel adhere to crew rest rules of this part.

(b) [Reserved]

§ 431.39 Mission rules, procedures, contingency plans, and checklists.

(a) An applicant shall submit mission rules, procedures, checklists, emergency plans, and contingency abort plans, if any, that ensure safe conduct of mission operations during nominal and non-nominal vehicle flight.

(b) Mission rules, procedures, checklists, emergency plans, and contingency abort plans must be contained in a safety directive, notebook, or other compilation that is approved by the safety official designated under § 431.33(c) and concurred in by the launch site operator and reentry site operator, if any.

(c) Vehicle safety operations personnel must have current and consistent mission checklists.

§ 431.41 Communications plan.

(a) An applicant shall submit a plan providing vehicle safety operations personnel communications procedures during the mission. Procedures for effective issuance and communication of safety-critical information during the mission shall include hold/resume, go/no go, contingency abort, if any, and emergency abort commands by vehicle safety operations personnel. The communications plan shall describe the authority of vehicle safety operations personnel, by individual or position title, to issue these commands. The communications plan shall ensure that—

(1) Communication networks are assigned so that personnel identified under this section have direct access to real-time, safety-critical information required for making decisions and issuing commands;

(2) Personnel identified under this section monitor a common intercom channel for safety-critical communications during launch and reentry;

(3) A protocol is established for utilizing defined radio communications terminology; and

(4) Communications affecting the safety of the mission are recorded in a manner that accurately reflects communications made on individual channels, synchronized time coding, and sequence of communications.

(b) An applicant shall submit procedures to ensure that licensee and reentry site personnel, if any, receive a copy of the communications plan required by this section and that the reentry site operator, if any, concurs with the communications plan.

§ 431.43 Reusable launch vehicle mission operational requirements and restrictions.

(a) An applicant for RLV mission safety approval shall submit procedures—

(1) That ensure RLV mission risks do not exceed the criteria set forth in § 431.35 for nominal and non-nominal operations;

(2) That ensure conformance with the system safety process and associated hazard identification and risk assessment required under § 431.35(c);

(3) That ensure conformance with operational restrictions listed in paragraphs (c) through (e) of this section;

(4) To monitor and verify the status of RLV safety-critical systems sufficiently before enabling both launch and reentry flight to ensure public safety and during mission flight unless technically infeasible; and

(5) For human activation or initiation of a flight safety system that safely aborts the launch of an RLV if the vehicle is not operating within approved mission parameters and the vehicle poses risk to public health and safety and the safety of property in excess of acceptable flight risk as defined in § 431.35.

(b) To satisfy risk criteria set forth in § 431.35(b)(1), an applicant for RLV mission safety approval shall identify suitable and attainable locations for nominal landing and vehicle staging impact or landing, if any. An application shall identify such locations for a contingency abort if necessary to satisfy risk criteria contained in § 431.35(b)(1) during launch of an RLV. A nominal landing, vehicle staging impact and contingency abort location are suitable for launch or reentry if—

(1) For any vehicle or vehicle stage, the area of the predicted three-sigma dispersion of the vehicle or vehicle stage can be wholly contained within the designated location; and

(2) The location is of sufficient size to contain landing impacts, including debris dispersion upon impact and any toxic release.

(c) For an RLV mission—

(1) A collision avoidance analysis shall be performed in order to maintain at least a 200-kilometer separation from any inhabitable orbiting object during launch and reentry. The analysis shall address:

(i) For launch, closures in a planned launch window for ascent to outer space or, for an orbital RLV, to initial orbit through at least one complete orbit;

(ii) For reentry, the reentry trajectory;

(iii) Expansions of the closure period by subtracting 15 seconds from the closure start-time and adding 15 seconds to the closure end-time for each sequential 90 minutes elapsed time period, or portion there of, beginning at the time the state vectors of the orbiting objects were determined;

(2) The projected instantaneous impact point (IIP) of the vehicle shall not have substantial dwell time over densely populated areas during any segment of mission flight;

(3) There will be no unplanned physical contact between the vehicle or its components and payload after payload separation and debris generation will not result from conversion of energy sources into energy that fragments the vehicle or its payload. Energy sources include, but are not limited to, chemical, pneumatic, and kinetic energy; and

(4) Vehicle safety operations personnel shall adhere to the following work and rest standards:

(i) A maximum 12-hour work shift with at least 8 hours of rest after 12 hours of work, preceding initiation of an RLV reentry mission or during the conduct of a mission;

(ii) A maximum of 60 hours worked in the 7 days, preceding initiation of an RLV mission;

(iii) A maximum of 14 consecutive work days; and

(iv) A minimum 48-hour rest period after 5 consecutive days of 12-hour shifts.

(d) In addition to requirements of paragraph (c) of this section, any unproven RLV may only be operated so that during any portion of flight—

(1) The projected instantaneous impact point (IIP) of the vehicle does not have substantial dwell time over populated areas; or

(2) The expected average number of casualties to members of the public does not exceed 30×10^{-6} ($E_c \leq 30 \times 10^{-6}$)

given a probability of vehicle failure equal to 1 (pf=1) at any time the IIP is over a populated area;

(e) Any RLV that enters Earth orbit may only be operated such that the vehicle operator is able to—

(1) Monitor and verify the status of safety-critical systems before enabling reentry flight to assure the vehicle can reenter safely to Earth; and

(2) Issue a command enabling reentry flight of the vehicle. Reentry flight cannot be initiated autonomously under nominal circumstances without prior enable.

§ 431.45 Mishap investigation plan and emergency response plan.

(a) *Mishap investigation plan and emergency response plan.* An applicant shall submit a mishap investigation plan (MIP) containing the applicant's procedures for reporting and responding to launch and reentry accidents, launch and reentry incidents, or other mishaps, as defined in § 401.5 of this chapter, that occur during the conduct of an RLV mission. An acceptable MIP satisfies the requirements of paragraphs (b)–(d) of this section. An applicant shall also submit an emergency response plan (ERP) that contains procedures for informing the affected public of a planned RLV mission. An acceptable ERP satisfies the requirements of paragraph (e) of this section. The MIP and ERP shall be signed by an individual authorized to sign and certify the application in accordance with § 413.7(c) of this chapter, the person responsible for the conduct of all licensed RLV mission activities designated under § 431.33(b) of this subpart, and the safety official designated under § 431.33(c) of this subpart.

(b) *Report requirements.* A MIP shall provide for—

(1) Immediate notification to the FAA Washington Operations Center in case of a launch or reentry accident, launch or reentry incident, or a mishap that involves a fatality or serious injury (as defined in 49 CFR 830.2);

(2) Notification within 24 hours to the Associate Administrator for Commercial Space Transportation in the event of a mishap that does not involve a fatality or serious injury, as defined in 49 CFR 830.2; and

(3) Submission of a written preliminary report to the FAA Associate Administrator for Commercial Space Transportation in the event of a launch accident or launch incident occurring in the conduct of an RLV mission, or reentry accident or reentry incident, occurring in the conduct of an RLV mission, within 5 days of the event. The report shall identify the event as either a launch or reentry accident or incident and must include the following information:

(i) Date and time of occurrence;

(ii) Description of the event and sequence of events leading to the accident or incident, to the extent known;

(iii) Intended and actual location of launch and reentry or other landing on Earth;

(iv) Identification of the vehicle;

(v) Identification of the payload, if applicable;

(vi) Number and general description of any fatalities and injuries;

(vii) Property damage, if any, and an estimate of its value;

(viii) Identification of hazardous materials, as defined in § 401.5 of this chapter, involved in the event, whether on the vehicle, payload, or on the ground;

(ix) Action taken by any person to contain the consequences of the event;

(x) Weather conditions at the time of the event; and

(xi) Potential consequences for other vehicles or systems of similar type and proposed operations.

(c) *Response plan.* A MIP must contain procedures to—

(1) Ensure the consequences of a launch accident, launch incident, reentry accident, reentry incident, or other mishap occurring in the conduct of an RLV mission are contained and minimized;

(2) Ensure data and physical evidence are preserved;

(3) Require the licensee to report and to cooperate with FAA and the National Transportation Safety Board investigations and designate one or more points of contact for the FAA or NTSB; and;

(4) Require the licensee to identify and adopt preventive measures for avoiding recurrence of the event.

(d) *Investigation plan.* A MIP shall contain—

(1) Procedures for investigating the cause of an event described in paragraph (c)(1) of this section;

(2) Procedures for reporting investigation results to the FAA;

(3) Delineated responsibilities, including reporting responsibilities, for personnel assigned to conduct investigations and for any unrelated entities retained by the licensee to conduct or participate in investigations.

(e) *Emergency response plan*. An ERP shall provide for—

(1) Notification to local officials in the event of an off-site or unplanned landing so that vehicle recovery can be conducted safely and effectively and with minimal risk to public safety. The plan must provide for the quick dissemination of up to date information to the public, and for doing so in advance of reentry or other landing on Earth to the extent practicable; and

(2) A public information dissemination plan for informing the potentially affected public, in laymen's terms and in advance of a planned reentry, of the estimated date, time and landing location for the reentry activity.

§ 431.47 Denial of safety approval.

The FAA notifies an applicant, in writing, if the FAA has denied safety approval for an RLV mission license application. The notice states the reasons for the FAA's determination. The applicant may respond to the reasons for the determination and request reconsideration.

§§ 431.48–431.50 [Reserved]

Subpart D—Payload Reentry Review and Determination

§ 431.51 General.

(a) A payload reentry review is conducted to examine the policy and safety issues related to the proposed reentry of a payload, other than a U.S. Government payload or a payload whose reentry is subject to regulation by another Federal agency, to determine whether the FAA will approve reentry of the payload.

(b) A payload reentry review may be conducted as part of an RLV mission license application review or may be requested by a payload owner or operator in advance of or separate from an RLV mission license application.

(c) A payload reentry determination will be made part of the licensing record on which the FAA's licensing determination is based.

§ 431.53 Classes of payloads.

(a) The FAA may approve the return of a type or class of payload (for example, communications or microgravity/scientific satellites).

(b) The RLV mission licensee that will return a payload approved for reentry under this section, is responsible for providing current information in accordance with § 431.57 regarding the payload proposed for reentry no later than 60 days before a scheduled RLV mission involving that payload.

§ 431.55 Payload reentry review.

(a) In conducting a payload reentry review to decide if the FAA should approve reentry of a payload, the FAA determines whether its reentry presents any issues that would adversely affect U.S. national security or foreign policy interests, would jeopardize public health and safety or the safety of property, or would not be consistent with international obligations of the United States.

(b) The FAA consults with the Department of Defense to determine whether reentry of a proposed payload presents any issues adversely affecting U.S. national security.

(c) The FAA consults with the Department of State to determine whether reentry of a proposed payload presents any issues adversely affecting U.S. foreign policy interests or international obligations.

(d) The FAA consults with other Federal agencies, including the National Aeronautics and Space Administration, authorized to address issues identified under paragraph (a) of this section.

(e) The FAA advises a person requesting a payload reentry determination, in writing, of any issue raised during a payload reentry review that would impede the issuance of a favorable determination to reenter that payload. The person requesting a payload reentry review may respond, in writing, or revise its application.

§ 431.57 Information requirements for payload reentry review.

A person requesting reentry review of a particular payload or payload class must identify the following:

(a) Payload name or class and function;

(b) Physical characteristics, dimensions, and weight of the payload;

(c) Payload owner and operator, if different from the person requesting the payload reentry review;

(d) Type, amount, and container of hazardous materials, as defined in § 401.5 of this chapter, and radioactive materials in the payload;

(e) Explosive potential of payload materials, alone and in combination with other materials found on the payload or RLV during reentry;

(f) Designated reentry site(s); and

(g) Method for securing the payload on the RLV.

§ 431.59 Issuance of payload reentry determination.

(a) The FAA issues a favorable payload reentry determination unless it determines that reentry of the proposed payload would adversely affect U.S. national security or foreign policy interests, would jeopardize public health and safety or the safety of property, or would not be consistent with international obligations of the United States. The FAA responds to any person who has requested a payload reentry review of its determination in writing. The notice states the reasons for the determination in the event of an unfavorable determination.

(b) Any person issued an unfavorable payload reentry determination may respond to the reasons for the determination and request reconsideration.

§ 431.61 Incorporation of payload reentry determination in license application.

A favorable payload reentry determination issued for a payload or class of payload may be included by an RLV mission license applicant as part of its application. Before the conduct of an RLV mission involving a payload approved for reentry, any change in information provided under § 431.57 must be reported by the licensee in accordance with § 413.17 of this chapter. The FAA determines whether a favorable payload reentry determination remains valid and may conduct an additional payload reentry review.

§§ 431.62–431.70 [Reserved]

Subpart E—Post-Licensing Requirements—Reusable Launch Vehicle Mission License Terms and Conditions

§ 431.71 Public safety responsibility.

(a) A licensee is responsible for ensuring the safe conduct of an RLV mission and for protecting public health and safety and the safety of property during the conduct of the mission.

(b) A licensee must conduct a licensed RLV mission and perform RLV safety procedures in accordance with representations made in its license application. A licensee's failure to perform safety procedures in accordance with the representations made in the license application or comply with any license condition is sufficient basis for the revocation of a license or other appropriate nforcement action.

§ 431.73 Continuing accuracy of license application; application for modification of license.

(a) A licensee is responsible for the continuing accuracy of representations contained in its application for the entire term of the license.

(b) After a license has been issued, a licensee must apply to the FAA for modification of the license if—

(1) The licensee proposes to conduct an RLV mission or perform a safety-critical operation in a manner not authorized by the license; or

(2) Any representation contained in the license application that is material to public health and safety or the safety of property is no longer accurate and complete or does not reflect the licensee's procedures governing the actual conduct of an RLV mission. A change is material to public health and safety or the safety of property if it alters or affects the—

(i) Mission rules, procedures, checklists, emergency plans, and contingency abort plans, if any, submitted in accordance with § 431.39

(ii) Class of payload;

(iii) Type of RLV;

(iv) Any safety-critical system;

(v) Type and container of the hazardous material carried by the vehicle;

(vi) Flight trajectory;

(vii) Launch site or reentry site or other landing location; or

(viii) Any safety system, policy, procedure, requirement, criteria, or standard.

(c) An application to modify an RLV mission license must be prepared and submitted in accordance with part 413 of this chapter. The licensee must indicate any part of its license or license application that would be changed or affected by a proposed modification.

(d) The FAA reviews determinations and approvals required by this chapter to determine whether they remain valid after submission of a proposed modification.

(e) Upon approval of a modification, the FAA issues either a written approval to the licensee or a license order amending the license if a stated term or condition of the license is changed, added, or deleted. An approval has the full force and effect of a license order and is part of the licensing record.

§ 431.75 Agreements.

(a) *Launch and reentry site use agreements.* Before conducting a licensed RLV mission using property and services of a Federal launch range or licensed launch or reentry site operator, a licensee or applicant shall enter into an agreement with the Federal launch range and/or licensed site operator that provides for access to and use of property and services required to support a licensed RLV mission or reentry and for public safety related operations and support. The agreement shall be in effect before any licensed RLV mission or reentry. A licensee shall comply with any requirements of the agreement that may affect public health and safety and the safety of property during the conduct of its licensed activity.

(b) *Agreements for notices to mariners and airmen.* Unless otherwise addressed in agreements between a licensed launch site operator and the U.S. Coast Guard and the FAA, respectively, a licensee authorized to conduct an RLV mission using a launch site or reentry site other than a Federal launch range shall complete the following:

(1) An agreement between the licensee and the local U.S. Coast Guard district to establish procedures for the issuance of a Notice to Mariners prior to a launch or reentry and other measures as the Coast Guard deems necessary to protect public health and safety; and

(2) An agreement between the licensee and the FAA regional office having jurisdiction over the airspace through which a launch and reentry will take place, to establish procedures for the issuance of a Notice to Airmen prior to the conduct of a licensed launch or reentry and for closing of air routes during the respective launch and reentry windows and other measures deemed necessary by the FAA regional office in order to protect public health and safety.

§ 431.77 Records.

(a) Except as specified in paragraph (b) of this section, a licensee shall maintain for 3 years all records, data, and other material necessary to verify that a licensed RLV mission is conducted in accordance with representations contained in the licensee's application.

(b) In the event of a launch accident, reentry accident, launch incident or reentry incident, as defined in § 401.5 of this chapter, a licensee shall preserve all records related to the event. Records must be retained until completion of any Federal investigation and the FAA advises the licensee that the records need not be retained. The licensee shall make all records required to be maintained under the regulations available to Federal officials for inspection and copying.

§ 431.79 Reusable launch vehicle mission reporting requirements.

(a) Not less than 60 days before each RLV mission conducted under a license, a licensee shall provide the FAA with the following information:

(1) Payload information in accordance with 14 CFR § 415.59 of this chapter and § 431.57; and

(2) Flight information, including the vehicle, launch site, planned launch and reentry flight path, and intended

landing sites including contingency abort sites.

(3) Launch or reentry waivers, approved or pending, from a federal Federal range for at which the launch or reentry will take place, that are unique and may affect public safety.

(b) Not later than 15 days before each licensed RLV mission, a licensee must notify the FAA, in writing, of the time and date of the intended launch and reentry or other landing on Earth of the RLV and may utilize the FAA/U.S. Space Command Launch Notification Form, contained in part 415, Appendix A, of this subchapter for doing so.

(c) A licensee must report a launch accident, launch incident, reentry accident, reentry incident, or other mishap immediately to the FAA Washington Operations Center and provide a written preliminary report in the event of a launch accident, launch incident, reentry accident, or reentry incident, in accordance with the mishap investigation and emergency response plan submitted as part of its license application under § 431.45.

§ 431.81 Financial responsibility requirements.

A licensee under this part must comply with financial responsibility requirements specified in its license.

§ 431.83 Compliance monitoring.

A licensee shall allow access by, and cooperate with, Federal officers or employees or other individuals authorized by the FAA to observe any activities of the licensee, or of the licensee's contractors or subcontractors, associated with the conduct of a licensed RLV mission.

§ 431.85 Registration of space objects.

(a) To assist the U.S. Government in implementing Article IV of the 1975 Convention on Registration of Objects Launched into Outer Space, each licensee shall provide to the FAA the information required by paragraph (b) of this section for all objects placed in space by a licensed RLV mission, including an RLV and any components, except:

(1) Any object owned and registered by the U.S. Government; and

(2) Any object owned by a foreign entity.

(b) For each object that must be registered in accordance with this section, a licensee shall submit the following information not later than thirty (30) days following the conduct of a licensed RLV mission :

(1) The international designator of the space object(s);

(2) Date and location of the RLV mission initiation;

(3) General function of the space object; and

(4) Final orbital parameters, including:

(i) Nodal period;

(ii) Inclination;

(iii) Apogee; and

(iv) Perigee.

(c) A licensee shall notify the FAA when it removes an object that it has previously placed in space.

§§ 431.86–431.90 [Reserved]

Subpart F—Environmental Review

§ 431.91 General.

An applicant shall provide the FAA with sufficient information to analyze the environmental impacts associated with proposed operation of an RLV, including the impacts of anticipated activities to be performed at its reentry site. The information provided by an applicant must be sufficient to enable the FAA to comply with the requirements of the National Environmental Policy Act, 42 U.S.C. 4321 *et seq.*, the Council on Environmental Quality Regulations for Implementing the Procedural Provisions of the National Environmental Policy Act, 40 CFR parts 1500–1508, and the FAA's Procedures for Considering Environmental Impacts, FAA Order 1050.1D. Copies of FAA Order 1050.1D may be obtained from the Office of Environment and Energy, AEE–300, Federal Aviation Administration, 800 Independence Avenue SW., Washington, DC 20591, (202) 267–3553. Copies of FAA Order 1050.1D may be inspected in the Rules Docket at the Federal Aviation Administration, Office of the Chief Counsel, AGC–200, Room 915G, 800 Independence Avenue SW., Washington, DC 20591 weekdays between 8:30 a.m. and 5:00 p.m.

§ 431.93 Environmental information.

An applicant shall submit environmental information concerning—

(a) A designated launch and reentry site, including contingency abort locations, if any, not covered by existing FAA or other Federal environmental documentation;

(b) A proposed new RLV with characteristics falling measurably outside the parameters of existing environmental documentation;

(c) A proposed reentry to an established reentry site involving an RLV with characteristics falling measurably outside the parameters of existing environmental impact statements covering that site;

(d) A proposed payload that may have significant environmental impacts in the event of a reentry accident; and

(e) Other factors as necessary to comply with the National Environmental Policy Act.

PART 432 [RESERVED]

PART 433—LICENSE TO OPERATE A REENTRY SITE

Subpart A—General

Sec.

433.1 General.
433.3 Issuance of a license to operate a reentry site.
433.5 Operational restrictions on a reentry site.
433.7 Environmental.
433.9 Environmental information.

AUTHORITY: 49 U.S.C. 70101–70121.

SOURCE: Docket No. FAA–1999–5535, 65 FR 56665, Sept. 19, 2000, unless otherwise noted.

§ 433.1 General.

The FAA evaluates on an individual basis an applicant's proposal to operate a reentry site.

§ 433.3 Issuance of a license to operate a reentry site.

(a) The FAA issues a license to operate a reentry site when it determines that an applicant's operation of the reentry site does not jeopardize public health and safety, the safety of property, U.S. national security or foreign policy interests, or international obligations of the United States.

(b) A license to operate a reentry site authorizes a licensee to operate a reentry site in accordance with the representations contained in the licensee's application, subject to the licensee's compliance with terms and conditions contained in any license order accompanying the license.

§ 433.5 Operational restrictions on a reentry site.

A license to operate a reentry site authorizes the licensee to offer use of the site to support reentry of a reentry vehicle for which the three-sigma footprint of the vehicle upon reentry is wholly contained within the site.

§ 433.7 Environmental.

An applicant shall provide the FAA with information for the FAA to analyze the environmental impacts associated with proposed operation of a reentry site. The information provided by an applicant must be sufficient to enable the FAA to comply with the requirements of the National Environmental Policy Act, 42 U.S.C. 4321 *et seq.* (NEPA), the Council on Environmental Quality Regulations for Implementing the Procedural Provisions of NEPA, 40 CFR Parts 1500–1508, and the FAA's Procedures for Consideration Environmental Impacts, FAA Order 1050.1D.

§ 433.9 Environmental information.

An applicant shall submit environmental information concerning a proposed reentry site not covered by existing environmental documentation for purposes of assessing reentry impacts.

PART 434 [RESERVED]

PART 435—REENTRY OF A REENTRY VEHICLE OTHER THAN A REUSABLE LAUNCH VEHICLE (RLV)

Subpart A—General

Sec.

435.1 Scope.
435.3 Types of reentry licenses.
435.5 Policy and safety approvals.
435.7 Payload reentry determination.
435.9 Issuance of a reentry license.
435.11 Additional license terms and conditions.

435.13 Transfer of a reentry license.
435.15 Rights not conferred by reentry license.
435.16–435.20 [Reserved]

Subpart B—Policy Review and Approval for Reentry of a Reentry Vehicle

435.21 General.
435.23 Policy review requirements and procedures.
435.24–435.30 [Reserved]

Subpart C—Safety Review and Approval for Reentry of a Reentry Vehicle

435.31 General.
435.33 Safety review requirements and procedures.
435.35 Acceptable reentry risk for reentry of a reentry vehicle.
435.36–435.40 [Reserved]

Subpart D—Payload Reentry Review and Determination

435.41 General.
435.43 Payload reentry review requirements and procedures.
435.44–435.50 [Reserved]

Subpart E—Post-Licensing Requirements—Reentry License Terms and Conditions

435.51 General.
435.52–435.60 [Reserved]

Subpart F—Environmental Review

435.61 General.
435.62–435.70 [Reserved]

AUTHORITY: 49 U.S.C. 70101–70121.

SOURCE: Docket No. FAA–1999–5535, 65 FR 56665, Sept. 19, 2000, unless otherwise noted.

Subpart A—General

§ 435.1 Scope.

This part prescribes requirements for obtaining a license to reenter a reentry vehicle other than a reusable launch vehicle (RLV), and post-licensing requirements with which a licensee must comply to remain licensed. Requirements for preparing a license application are contained in part 413 of this subchapter.

§ 435.3 Types of reentry licenses.

(a) *Reentry-specific license.* A reentry-specific license authorizes a licensee to reenter one model or type of reentry vehicle, other than an RLV, to a reentry site or other location approved for the reentry. A reentry-specific license may authorize more than one reentry and identifies each reentry authorized under the license. A licensee's authorization to reenter terminates upon completion of all activities authorized by the license or the expiration date stated in the reentry license, whichever occurs first.

(b) *Reentry-operator license.* A reentry operator license authorizes a licensee to reenter any of a designated family of reentry vehicles, other than an RLV, within authorized parameters, including trajectories, transporting specified classes of payloads to any reentry site designated in the license. A reentry operator license is valid for a 2-year renewable term.

§ 435.5 Policy and safety approvals.

To obtain a reentry license, an applicant must obtain policy and safety approvals from the FAA. Requirements for obtaining these approvals are contained in subparts B and C of this part. Only a reentry license applicant may apply for the approvals, and may apply for either approval separately and in advance of submitting a complete license application, using the application procedures contained in part 413 of this subchapter.

§ 435.7 Payload reentry determination.

(a) A payload reentry determination is required to transport a payload to Earth on a reentry vehicle unless the proposed payload is exempt from payload review.

(b) A payload reentry determination made under a previous license application under this subchapter may satisfy the requirements of paragraph (a) of this section.

(c) The FAA conducts a review, as described in subpart D of this part, to make a payload reentry determination. Either a reentry license applicant or a payload owner or operator may request a review of the proposed payload using the application procedures contained in part 413 of this subchapter. Upon receipt of an application, the FAA may conduct a payload reentry review independently of a reentry license application.

§ 435.9 Issuance of a reentry license.

(a) The FAA issues a reentry license to an applicant who has obtained all approvals and determinations required under this chapter for a reentry license.

(b) A reentry license authorizes a licensee to reenter a reentry vehicle and payload, if any, in accordance with the representations contained in the reentry licensee's application, subject to the licensee's compliance with terms and conditions contained in license orders accompanying the reentry license, including financial responsibility requirements.

§ 435.11 Additional license terms and conditions.

The FAA may amend a reentry license at any time by modifying or adding license terms and conditions to ensure compliance with 49 U.S.C. Subtitle IX, chapter 701, and applicable regulations.

§ 435.13 Transfer of a reentry license.

(a) Only the FAA may transfer a reentry license.

(b) An applicant for transfer of a reentry license shall submit a reentry license application in accordance with part 413 of this subchapter and satisfy the applicable requirements of this part. The FAA will transfer a reentry license to an applicant who has obtained all of the approvals and determinations required under this chapter for a reentry license. In conducting its reviews and issuing approvals and determinations, the FAA may incorporate any findings made part of the record to support the initial licensing determination. The FAA may modify a reentry license to reflect any changes necessary as a result of a reentry license transfer.

§ 435.15 Rights not conferred by reentry license.

Issuance of a reentry license does not relieve a licensee of its obligation to comply with requirements of law that may apply to its activities.

§§ 435.16–431.20 [Reserved]

Subpart B—Policy Review and Approval for Reentry of a Reentry Vehicle

§ 435.21 General.

The FAA issues a policy approval to a reentry license applicant upon completion of a favorable policy review. A policy approval is part of the licensing record on which the licensing determination is based.

§ 435.23 Policy review requirements and procedures.

Unless otherwise indicated in this subpart, regulations applicable to policy review and approval of the reentry of an RLV contained in part 431, subpart B of this subchapter shall apply to the policy review conducted for a license to reenter a reentry vehicle under this part.

§§ 435.24–435.30 [Reserved]

Subpart C—Safety Review and Approval for Reentry of a Reentry Vehicle

§ 435.31 General.

The FAA conducts a safety review to determine whether an applicant is capable of reentering a reentry vehicle and payload, if any, to a designated reentry site without jeopardizing public health and safety and the safety of property. A safety approval is part of the licensing record on which the licensing determination is based.

§ 435.33 Safety review requirements and procedures.

Unless otherwise stated in this subpart, regulations applicable to safety review and approval of the reentry of an RLV contained in part 431, subpart C of this subchapter shall apply to the safety review conducted for a license to reenter a reentry vehicle under this part.

§ 435.35 Acceptable reentry risk for reentry of a reentry vehicle.

To obtain safety approval for reentry, an applicant must demonstrate that risk for the proposed reentry,

when assessed in combination with launch of the reentry vehicle, does not exceed acceptable risk for the conduct of an RLV mission as defined in paragraphs (a) and (b) of § 431.35 of this subchapter.

§§ 435.36–435.40 [Reserved]

Subpart D—Payload Reentry Review and Determination

§ 435.41 General.

The FAA conducts a payload reentry review to examine the policy and safety issues related to the proposed reentry of a payload, except a U.S. Government payload, to determine whether the FAA will approve the reentry of the payload.

§ 435.43 Payload reentry review requirements and procedures.

Unless otherwise indicated in this subpart, regulations contained in part 431, subpart D of this subchapter applicable to a payload reentry review and determination for reentering a payload using an RLV shall apply to the payload reentry review conducted for a license to reenter a reentry vehicle under this part.

§§ 435.44–435.50 [Reserved]

Subpart E—Post-Licensing Requirements—Reentry License Terms and Conditions

§ 435.51 General.

Unless otherwise indicated in this subpart, post-licensing requirements contained in part 431 subpart E, of this subchapter applicable to a license to reenter an RLV shall apply to a license issued under this part.

§§ 435.52–435.60 [Reserved]

Subpart F—Environmental Review

§ 435.61 General.

Unless otherwise indicated in this subpart, environmental review requirements contained in part 431 subpart F, applicable to a license to reenter an RLV shall apply to an application for a reentry license under this part.

§§ 435.62–435.70 [Reserved]

PARTS 436–439 [RESERVED]

PART 440—FINANCIAL RESPONSIBILITY

Subpart A—Financial Responsibility for Licensed Launch Activities

Sec.

440.1 Scope of part.
440.3 Definitions.
440.5 General.
440.7 Determination of maximum probable loss.
440.9 Insurance requirements for licensed launch activities.
440.11 Duration of coverage; Modifications.
440.13 Standard conditions of insurance coverage.
440.15 Demonstration of compliance.
440.17 Reciprocal waiver of claims requirement.
440.19 United States payment of excess third-party liability claims.
APPENDIX A TO PART 440—INFORMATION REQUIREMENTS FOR OBTAINING A MAXIMUM PROBABLE LOSS DETERMINATION FOR LICENSED LAUNCH ACTIVITIES
APPENDIX B TO PART 440—AGREEMENT FOR WAIVER OF CLAIMS AND ASSUMPTION OF RESPONSIBILITY

AUTHORITY: 49 U.S.C. 70101–70119; 49 CFR 1.47.

SOURCE: Docket No. 28635, 63 FR 45619, Aug. 26, 1998, unless otherwise noted.

Subpart A—Financial Responsibility for Licensed Launch Activities

§ 440.1 Scope of part.

This part sets forth financial responsibility and allocation of risk requirements applicable to commercial space launch activities that are authorized to be conducted under a launch license issued pursuant to this subchapter.

§ 440.3 Definitions.

(a) For purposes of this part—

(1) *Bodily injury* means physical injury, sickness, disease, disability, shock, mental anguish, or mental injury sustained by any person, including death.

(2) *Contractors and subcontractors* means those entities that are involved

at any tier, directly or indirectly, in licensed launch activities, and includes suppliers of property and services, and the component manufacturers of a launch vehicle or payload.

(3) *Customer* means the person who procures launch services from the licensee, any person to whom the customer has sold, leased, assigned, or otherwise transferred its rights in the payload (or any part thereof) to be launched by the licensee, including a conditional sale, lease, assignment, or transfer of rights, any person who has placed property on board the payload for launch or payload services, and any person to whom the customer has transferred its rights to the launch services.

(4) *Federal range facility* means a Government-owned installation at which launches take place.

(5) *Financial responsibility* means statutorily required financial ability to satisfy liability as required under 49 U.S.C. 70101–70119.

(6) *Government personnel* means employees of the United States, its agencies, and its contractors and subcontractors, involved in launch services for licensed launch activities. Employees of the United States include members of the Armed Forces of the United States.

(7) *Hazardous operations* means activities, processes, and procedures that, because of the nature of the equipment, facilities, personnel, or environment involved or function being performed, may result in bodily injury or property damage.

(8) *Liability* means a legal obligation to pay claims for bodily injury or property damage resulting from licensed launch activities.

(9) *License* means an authorization to conduct licensed launch activities, issued by the Office under this subchapter.

(10) *Licensed launch activities* means the launch of a launch vehicle as defined in a regulation or license issued by the Office and carried out pursuant to a launch license.

(11) *Maximum probable loss (MPL)* means the greatest dollar amount of loss for bodily injury or property damage that is reasonably expected to result from licensed launch activities;

(i) Losses to third parties, excluding Government personnel and other launch participants' employees involved in licensed launch activities, that are reasonably expected to result from licensed launch activities are those having a probability of occurrence on the order of no less than one in ten million.

(ii) Losses to Government property and Government personnel involved in licensed launch activities that are reasonably expected to result from licensed launch activities are those having a probability of occurrence on the order of no less than one in one hundred thousand.

(12) *Office* means the Associate Administrator for Commercial Space Transportation of the Federal Aviation Administration, U.S. Department of Transportation.

(13) *Property damage* means partial or total destruction, impairment, or loss of tangible property, real or personal.

(14) *Regulations* means the Commercial Space Transportation Licensing Regulations, codified at 14 CFR Ch. III.

(15) *Third party* means:

(i) Any person other than:

(A) The United States, its agencies, and its contractors and subcontractors involved in launch services for licensed launch activities;

(B) The licensee and its contractors and subcontractors involved in launch services for licensed launch activities; and

(C) The customer and its contractors and subcontractors involved in launch services for licensed launch activities.

(ii) Government personnel, as defined in this section, are third parties.

(16) *United States* means the United States Government, including its agencies.

(b) Except as otherwise provided in this section, any term used in this part and defined in 49 U.S.C. 70101–70119, or in §401.5 of this chapter shall have the meaning contained therein.

§440.5 General.

(a) No person shall commence or conduct launch activities that require a license unless that person has obtained a license and fully demonstrated compliance with the financial responsibility

and allocation of risk requirements set forth in this part.

(b) The Office shall prescribe the amount of financial responsibility a licensee is required to obtain and any additions to or modifications of the amount in a license order issued concurrent with or subsequent to the issuance of a license.

(c) Demonstration of financial responsibility under this part shall not relieve the licensee of ultimate responsibility for liability, loss, or damage sustained by the United States resulting from licensed launch activities, except to the extent that:

(1) Liability, loss, or damage sustained by the United States results from willful misconduct of the United States or its agents;

(2) Covered claims of third parties for bodily injury or property damage arising out of any particular launch exceed the amount of financial responsibility required under § 440.9(c) of this part and do not exceed $1,500,000,000 (as adjusted for inflation occurring after January 1, 1989) above such amount, and are payable pursuant to 49 U.S.C. 70113 and § 440.19 of this part. Claims of employees of entities listed in § 440.3(a)(15)(i)(B) and (C) of this part for bodily injury or property damage are not covered claims;

(3) Covered claims for property loss or damage exceed the amount of financial responsibility required under § 440.9(e) of this part and do not result from willful misconduct of the licensee; or

(4) The licensee has no liability for covered claims by third parties for bodily injury or property damage arising out of any particular launch that exceed $1,500,000,000 (as adjusted for inflation occurring after January 1, 1989) above the amount of financial responsibility required under § 440.9(c) of this part.

(d) A licensee's failure to comply with the requirements in this part may result in suspension or revocation of a license, and subjects the licensee to civil penalties as provided in part 405 of this chapter.

§ 440.7 Determination of maximum probable loss.

(a) The Office shall determine the maximum probable loss (MPL) from covered claims by a third party for bodily injury or property damage, and the United States, its agencies, and its contractors and subcontractors for covered property damage or loss, resulting from licensed launch activities. The maximum probable loss determination forms the basis for financial responsibility requirements issued in a license order.

(b) The Office issues its determination of maximum probable loss no later than ninety days after a licensee or transferee has requested a determination and submitted all information required by the Office to make the determination. The Office shall consult with Federal agencies that are involved in, or whose personnel or property are exposed to risk of damage or loss as a result of, licensed launch activities before issuing a license order prescribing financial responsibility requirements and shall notify the licensee or transferee if interagency consultation may delay issuance of the MPL determination.

(c) Information requirements for obtaining a maximum probable loss determination are set forth in Appendix A of this part. Any person requesting a determination of maximum probable loss must submit information in accordance with Appendix A requirements, unless the Office has waived requirements. In lieu of submitting required information, a person requesting a maximum probable loss determination may designate and certify certain information previously submitted for a prior determination as complete, valid, and equally applicable to its current request. The requester is responsible for the continuing accuracy and completeness of information submitted under this part and shall promptly report any changes in writing.

(d) The Office shall amend a determination of maximum probable loss required under this section at any time prior to completion of licensed launch

activities as warranted by supplementary information provided to or obtained by the Office after the MPL determination is issued. Any change in financial responsibility requirements as a result of an amended MPL determination shall be set forth in a license order.

(e) The Office may make a determination of maximum probable loss at any time other than as set forth in paragraph (b) of this section upon request by any person.

[Doc. No. 28635, 63 FR 45619, Aug. 26, 1998; 63 FR 55175, Oct. 14, 1998]

§440.9 Insurance requirements for licensed launch activities.

(a) As a condition of each launch license, the licensee must comply with insurance requirements set forth in this section and in a license order issued by the Office, or otherwise demonstrate the required amount of financial responsibility.

(b) The licensee must obtain and maintain in effect a policy or policies of liability insurance, in an amount determined by the Office under paragraph (c) of this section, that protects the following persons as additional insureds to the extent of their respective potential liabilities against covered claims by a third party for bodily injury or property damage resulting from licensed launch activities:

(1) The licensee, its customer, and their respective contractors and subcontractors, and the employees of each, involved in licensed launch activities;

(2) The United States, its agencies, and its contractors and subcontractors involved in licensed launch activities; and

(3) Government personnel.

(c) The Office shall prescribe for each licensee the amount of insurance required to compensate the total of covered third-party claims for bodily injury or property damage resulting from licensed launch activities in connection with any particular launch. Covered third-party claims include claims by the United States, its agencies, and its contractors and subcontractors for damage or loss to property other than property for which insurance is required under paragraph (d) of this section. The amount of insurance required is based upon the Office's determination of maximum probable loss; however, it will not exceed the lesser of:

(1) $500 million; or

(2) The maximum liability insurance available on the world market at a reasonable cost, as determined by the Office.

(d) The licensee must obtain and maintain in effect a policy or policies of insurance, in an amount determined by the Office under paragraph (e) of this section, that covers claims by the United States, its agencies, and its contractors and subcontractors involved in licensed launch activities for property damage or loss resulting from licensed launch activities. Property covered by this insurance must include all property owned, leased, or occupied by, or within the care, custody, or control of, the United States and its agencies, and its contractors and subcontractors involved in licensed launch activities, at a Federal range facility. Insurance must protect the United States and its agencies, and its contractors and subcontractors involved in licensed launch activities.

(e) The Office shall prescribe for each licensee the amount of insurance required to compensate claims for property damage under paragraph (d) of this section resulting from licensed launch activities in connection with any particular launch. The amount of insurance is based upon a determination of maximum probable loss; however, it will not exceed the lesser of:

(1) $100 million; or

(2) The maximum available on the world market at a reasonable cost, as determined by the Office.

(f) In lieu of a policy of insurance, a licensee may demonstrate financial responsibility in another manner meeting the terms and conditions applicable to insurance as set forth in this part. The licensee must describe in detail the method proposed for demonstrating financial responsibility and how it assures that the licensee is able to cover claims as required under this part.

§ 440.11 Duration of coverage; modifications.

(a) Insurance coverage required under § 440.9, or other form of financial responsibility, shall attach upon commencement of licensed launch activities, and remain in full force and effect as follows:

(1) Until completion of licensed launch activities at the launch site; and

(2) For orbital launches, until the later of—

(i) Thirty days following payload separation, or attempted payload separation in the event of a payload separation anomaly; or

(ii) Thirty days from ignition of the launch vehicle.

(3) For suborbital launches, until the later of—

(i) Motor impact and payload recovery; or

(ii) The Office's determination that risk to third parties and Government property as a result of licensed launch activities is sufficiently small that financial responsibility is no longer necessary, as determined by the Office through the risk analysis conducted before the launch to determine MPL and specified in a license order.

(b) Financial responsibility required under this part may not be replaced, canceled, changed, withdrawn, or in any way modified to reduce the limits of liability or the extent of coverage, nor expire by its own terms, prior to the time specified in a license order, unless the Office is notified at least 30 days in advance and expressly approves the modification.

§ 440.13 Standard conditions of insurance coverage.

(a) Insurance obtained under § 440.9 shall comply with the following terms and conditions of coverage:

(1) Bankruptcy or insolvency of an insured, including any additional insured, shall not relieve the insurer of any of its obligations under any policy.

(2) Policy limits shall apply separately to each occurrence and, for each occurrence to the total of claims arising out of licensed launch activities in connection with any particular launch.

(3) Except as provided herein, each policy must pay claims from the first dollar of loss, without regard to any deductible, to the limits of the policy. A licensee may obtain a policy containing a deductible amount if the amount of the deductible is placed in an escrow account or otherwise demonstrated to be unobligated, unencumbered funds of the licensee, available to compensate claims at any time claims may arise.

(4) Each policy shall not be invalidated by any action or inaction of the licensee or any additional insured, including nonpayment by the licensee of the policy premium, and must insure the licensee and each additional insured regardless of any breach or violation of any warranties, declarations, or conditions contained in the policies by the licensee or any additional insured (other than a breach or violation by the licensee or an additional insured, and then only as against that licensee or additional insured).

(5) Exclusions from coverage must be specified.

(6) Insurance shall be primary without right of contribution from any other insurance that is carried by the licensee or any additional insured.

(7) Each policy must expressly provide that all of its provisions, except the policy limits, operate in the same manner as if there were a separate policy with and covering the licensee and each additional insured.

(8) Each policy must be placed with an insurer of recognized reputation and responsibility that is licensed to do business in any State, territory, possession of the United States, or the District of Columbia.

(9) Except as to claims resulting from the willful misconduct of the United States or its agents, the insurer shall waive any and all rights of subrogation against each of the parties protected by required insurance.

(b) [Reserved]

§ 440.15 Demonstration of compliance.

(a) A licensee must submit evidence of financial responsibility and compliance with allocation of risk requirements under this part, as follows, unless a license order specifies otherwise due to the proximity of the licensee's intended date for commencement of licensed launch activities:

(1) The three-party reciprocal waiver of claims agreement required under § 440.17(c) of this part must be submitted at least 30 days before commencement of licensed launch activities involving the customer that will sign the agreement;

(2) Evidence of insurance must be submitted at least 30 days before commencement of licensed launch activities;

(3) Evidence of financial responsibility in a form other than insurance, as provided under § 440.9(f) of this part, must be submitted at least 60 days before commencement of licensed launch activities; and

(4) Evidence of renewal of insurance or other form of financial responsibility must be submitted at least 30 days in advance of its expiration date.

(b) Upon a complete demonstration of compliance with financial responsibility and allocation of risk requirements under this part, the requirements shall preempt any provisions in agreements between the licensee and an agency of the United States governing access to or use of United States launch property or launch services for licensed launch activities which address financial responsibility, allocation of risk and related matters covered by 49 U.S.C. 70112, 70113.

(c) A licensee must demonstrate compliance as follows:

(1) The licensee must provide proof of insurance required under § 440.9 by:

(i) Certifying to the Office that it has obtained insurance in compliance with the requirements of this part and any applicable license order;

(ii) Filing with the Office one or more certificates of insurance evidencing insurance coverage by one or more insurers under a currently effective and properly endorsed policy or policies of insurance, applicable to licensed launch activities, on terms and conditions and in amounts prescribed under this part, and specifying policy exclusions;

(iii) In the event of any policy exclusions or limitations of coverage that may be considered usual under § 440.19(c) of this part, or for purposes of implementing the Government's waiver of claims for property damage under 49 U.S.C. 70112(b)(2), certifying that insurance covering the excluded risks is not commercially available at reasonable cost; and

(iv) Submitting to the Office, for signature by the Department on behalf of the United States Government, the waiver of claims and assumption of responsibility agreement required by § 440.17(c) of this part, executed by the licensee and its customer.

(2) Certifications required under this section must be signed by a duly authorized officer of the licensee.

(d) Certificate(s) of insurance required under paragraph (c)(1)(ii) of this section must be signed by the insurer issuing the policy and accompanied by an opinion of the insurance broker that the insurance obtained by the licensee complies with the specific requirements for insurance set forth in this part and any applicable license order.

(e) The licensee must maintain, and make available for inspection by the Office upon request, all required policies of insurance and other documents necessary to demonstrate compliance with this part.

(f) In the event the licensee demonstrates financial responsibility using means other than insurance, as provided under § 440.9(f) of this part, the licensee must provide proof that it has met the requirements set forth in this part and in a license order issued by the Office.

§ 440.17 Reciprocal waiver of claims requirements.

(a) As a condition of each launch license, the licensee shall comply with reciprocal waiver of claims requirements as set forth in this section.

(b) The licensee shall implement reciprocal waivers of claims with its contractors and subcontractors, its customer(s) and the customer's contractors and subcontractors, under which each party waives and releases claims against the other parties to the waivers and agrees to assume financial responsibility for property damage it sustains and for bodily injury or property damage sustained by its own employees, and to hold harmless and indemnify each other from bodily injury or property damage sustained by its employees, resulting from licensed launch activities, regardless of fault.

(c) For each licensed launch in which the U.S. Government, its agencies, or its contractors and subcontractors is involved in licensed launch activities or where property insurance is required under § 440.9(d) of this part, the Federal Aviation Administration of the Department of Transportation, the licensee, and its customer shall enter into a three-party reciprocal waiver of claims agreement in the form set forth in Appendix II to this part or that satisfies its requirements.

(d) The licensee, its customer, and the Federal Aviation Administration of the Department of Transportation on behalf of the United States and its agencies but only to the extent provided in legislation, must agree in any waiver of claims agreement required under this part to indemnify another party to the agreement from claims by the indemnifying party's contractors and subcontractors arising out of the indemnifying party's failure to implement properly the waiver requirement.

§ 440.19 United States payment of excess third-party liability claims.

(a) The United States pays successful covered claims (including reasonable expenses of litigation or settlement) of a third party against the licensee, the customer, and the contractors and subcontractors of the licensee and the customer, and the employees of each involved in licensed launch activities, and the contractors and subcontractors of the United States and its agencies, and their employees, involved in licensed launch activities to the extent provided in an appropriation law or other legislative authority providing for payment of claims in accordance with 49 U.S.C. 70113, and to the extent the total amount of such covered claims arising out of any particular launch:

(1) Exceeds the amount of insurance required under § 440.9(b); and

(2) Is not more than $1,500,000,000 (as adjusted for inflation occurring after January 1, 1989) above that amount.

(b) Payment by the United States under paragraph (a) of this section shall not be made for any part of such claims for which bodily injury or property damage results from willful misconduct by the party seeking payment.

(c) The United States shall provide for payment of claims by third parties for bodily injury or property damage that are payable under 49 U.S.C. 70113 and not covered by required insurance under § 440.9(b), without regard to the limitation under paragraph (a)(1) of this section, because of an insurance policy exclusion that is usual. A policy exclusion is considered usual only if insurance covering the excluded risk is not commercially available at reasonable rates. The licensee must submit a certification in accordance with § 440.15(c)(1)(iii) of this part for the United States to cover the claims.

(d) Upon the expiration of the policy period prescribed in accordance with § 440.11(a), the United States shall provide for payment of claims that are payable under 49 U.S.C. 70113 from the first dollar of loss up to $1,500,000,000 (as adjusted for inflation occurring after January 1, 1989).

(e) Payment by the United States of excess third-party claims under 49 U.S.C. 70113 shall be subject to:

(1) Prompt notice by the licensee to the Office that the total amount of claims arising out of licensed launch activities exceeds, or is likely to exceed, the required amount of financial responsibility. For each claim, the notice must specify the nature, cause, and amount of the claim or lawsuit associated with the claim, and the party or parties who may otherwise be liable for payment of the claim;

(2) Participation or assistance in the defense of the claim or lawsuit by the United States, at its election;

(3) Approval by the Office of any settlement, or part of a settlement, to be paid by the United States; and

(4) Approval by Congress of a compensation plan prepared by the Office and submitted by the President.

(f) The Office will:

(1) Prepare a compensation plan outlining the total amount of claims and meeting the requirements set forth in 49 U.S.C. 70113;

(2) Recommend sources of funds to pay the claims; and

(3) Propose legislation as required to implement the plan.

(g) The Office may withhold payment of a claim if it finds that the amount is unreasonable, unless it is the final

order of a court that has jurisdiction over the matter.

APPENDIX A TO PART 440—INFORMATION REQUIREMENTS FOR OBTAINING A MAXIMUM PROBABLE LOSS DETERMINATION FOR LICENSED LAUNCH ACTIVITIES

Any person requesting a maximum probable loss determination shall submit the following information to the Office, unless the Office has waived a particular information requirement under 14 CFR 440.7(c):

I. GENERAL INFORMATION

A. Mission description.

1. A description of mission parameters, including:

a. Launch trajectory;

b. Orbital inclination; and

c. Orbit altitudes (apogee and perigee).

2. Flight sequence.

3. Staging events and the time for each event.

4. Impact locations.

5. Identification of the launch range facility, including the launch complex on the range, planned date of launch, and launch windows.

6. If the applicant has previously been issued a license to conduct launch activities using the same launch vehicle from the same launch range facility, a description of any differences planned in the conduct of proposed activities.

B. Launch Vehicle Description.

1. General description of the launch vehicle and its stages, including dimensions.

2. Description of major systems, including safety systems.

3. Description of rocket motors and type of fuel used.

4. Identification of all propellants to be used and their hazard classification under the Hazardous Materials Table, 49 CFR 172.101.

5. Description of hazardous components.

C. Payload.

1. General description of the payload, including type (e.g., telecommunications, remote sensing), propellants, and hazardous components or materials, such as toxic or radioactive substances.

D. Flight Termination System.

1. Identification of any flight termination system (FTS) on the launch vehicle, including a description of operations and component location on the vehicle.

II. PRE-FLIGHT PROCESSING OPERATIONS

A. General description of pre-flight operations including vehicle processing consisting of an operational flow diagram showing the overall sequence and location of operations, commencing with arrival of vehicle components at the launch range facility through final safety checks and countdown sequence, and designation of hazardous operations, as defined in 14 CFR 440.3. For purposes of these information requirements, payload processing, as opposed to integration, is not a hazardous operation.

B. For each hazardous operation, including but not limited to fueling, solid rocket motor build-up, ordnance installation, ordnance checkout, movement of hazardous materials, and payload integration:

1. Identification of location where each operation will be performed, including each building or facility identified by name or number.

2. Identification of facilities adjacent to the location where each operation will be performed and therefore exposed to risk, identified by name or number.

3. Maximum number of Government personnel and individuals not involved in licensed launch activities who may be exposed to risk during each operation. For Government personnel, identification of his or her employer.

4. Identification of launch range facility policies or requirements applicable to the conduct of operations.

III. FLIGHT OPERATIONS

A. Identification of launch range facilities exposed to risk during launch vehicle lift-off and flight.

B. Identification of accident failure scenarios, probability assessments for each, and estimation of risks to Government personnel, individuals not involved in licensed launch activities, and Government property, due to property damage or bodily injury. The estimation of risks for each scenario shall take into account the number of such individuals at risk as a result of lift-off and flight of a launch vehicle (on-range, off-range, and down-range) and specific, unique facilities exposed to risk. Scenarios shall cover the range of launch trajectories, inclinations and orbits for which authorization is sought in the license application.

C. On-orbit risk analysis assessing risks posed by a launch vehicle to operational satellites.

D. Reentry risk analysis assessing risks to Government personnel and individuals not involved in licensed launch activities as a result of reentering debris or reentry of the launch vehicle or its components.

E. Trajectory data as follows: Nominal and 3-sigma lateral trajectory data in x, y, z and x (dot), y (dot), z (dot) coordinates in one-second intervals, data to be pad-centered with x being along the initial launch azimuth and continuing through impact for suborbital flights, and continuing through orbital insertion or the end of powered flight for orbital flights.

F. Tumble-turn data for guided vehicles only, as follows: For vehicles with gimbaled nozzles, tumble turn data with zeta angles and velocity magnitudes stated. A separate table is required for each combination of fail times (every two to four seconds), and significant nozzle angles (two or more small angles, generally between one and five degrees).

G. Identification of debris lethal areas and the projected number and ballistic coefficient of fragments expected to result from flight termination, initiated either by command or self-destruct mechanism, for lift-off, land overflight, and reentry.

IV. POST-FLIGHT PROCESSING OPERATIONS

A. General description of post-flight ground operations including overall sequence and location of operations for removal of vehicle components and processing equipment from the launch range facility and for handling of hazardous materials, and designation of hazardous operations.

B. Identification of all facilities used in conducting post-flight processing operations.

C. For each hazardous operation:

1. Identification of location where each operation is performed, including each building or facility identified by name or number.

2. Identification of facilities adjacent to location where each operation is performed and exposed to risk, identified by name or number.

3. Maximum number of Government personnel and individuals not involved in licensed launch activities who may be exposed to risk during each operation. For Government personnel, identification of his or her employer.

4. Identification of launch range facility policies or requirements applicable to the conduct of operations.

APPENDIX B TO PART 440—AGREEMENT FOR WAIVER OF CLAIMS AND ASSUMPTION OF RESPONSIBILITY

THIS AGREEMENT is entered into this _____ day of _____, by and among [Licensee] (the ''Licensee''), [Customer] (the ''Customer'') and the Federal Aviation Administration of the Department of Transportation, on behalf of the United States Government (collectively, the ''Parties''), to implement the provisions of section 440.17(c) of the Commercial Space Transportation Licensing Regulations, 14 CFR Ch. III (the ''Regulations'').

In consideration of the mutual releases and promises contained herein, the Parties hereby agree as follows:

1. DEFINITIONS

Customer means the above-named Customer on behalf of the Customer, any person to whom the Customer has sold, leased, assigned, or otherwise transferred its rights in the payload (or any part thereof) to be launched by the licensee, including a conditional sale, lease, assignment, or transfer of rights, any person who has placed property on board the payload for launch or payload services, and any person to whom the Customer has transferred its rights to the launch services.

License means License No. _____ issued on _____, by the Associate Administrator for Commercial Space Transportation, Federal Aviation Administration, Department of Transportation, to the Licensee, including all license orders issued in connection with the License.

Licensee means the Licensee and any transferee of the Licensee under 49 U.S.C. Subtitle IX, ch. 701.

United States means the United States and its agencies involved in Licensed Launch Activities.

Except as otherwise defined herein, terms used in this Agreement and defined in 49 U.S.C. Subtitle IX, ch. 701—Commercial Space Launch Activities, or in the Regulations, shall have the same meaning as contained in 49 U.S.C. Subtitle IX, ch. 701, or the Regulations, respectively.

2. WAIVER AND RELEASE OF CLAIMS

(a) Licensee hereby waives and releases claims it may have against Customer and the United States, and against their respective Contractors and Subcontractors, for Property Damage it sustains and for Bodily Injury or Property Damage sustained by its own employees, resulting from Licensed Launch Activities, regardless of fault.

(b) Customer hereby waives and releases claims it may have against Licensee and the United States, and against their respective Contractors and Subcontractors, for Property Damage it sustains and for Bodily Injury or Property Damage sustained by its own employees, resulting from Licensed Launch Activities, regardless of fault.

(c) The United States hereby waives and releases claims it may have against Licensee and Customer, and against their respective Contractors and Subcontractors, for Property Damage it sustains, and for Bodily Injury or Property Damage sustained by its own employees, resulting from Licensed Launch Activities, regardless of fault, to the extent that claims it would otherwise have for such damage or injury exceed the amount of insurance or demonstration of financial responsibility required under sections 440.9(c) and (e), respectively, of the Regulations, 14 CFR 440.9(c) and (e).

3. ASSUMPTION OF RESPONSIBILITY

(a) Licensee and Customer shall each be responsible for Property Damage it sustains

and for Bodily Injury or Property Damage sustained by its own employees, resulting from Licensed Launch Activities, regardless of fault. Licensee and Customer shall each hold harmless and indemnify each other, the United States, and the Contractors and Subcontractors of each Party, for Bodily Injury or Property Damage sustained by its own employees, resulting from Licensed Launch Activities, regardless of fault.

(b) The United States shall be responsible for Property Damage it sustains, and for Bodily Injury or Property Damage sustained by its own employees, resulting from Licensed Launch Activities, regardless of fault, to the extent that claims it would otherwise have for such damage or injury exceed the amount of insurance or demonstration of financial responsibility required under section 440.9(c) and (e), respectively, of the Regulations, 14 CFR 440.9(c) and (e).

4. EXTENSION OF ASSUMPTION OF RESPONSIBILITY AND WAIVER

(a) Licensee shall extend the requirements of the waiver and release of claims, and the assumption of responsibility, hold harmless, and indemnification, as set forth in paragraphs 2(a) and 3(a), respectively, to its Contractors and Subcontractors by requiring them to waive and release all claims they may have against Customer and the United States, and against the respective Contractors and Subcontractors of each, and to agree to be responsible, for Property Damage they sustain and to be responsible, hold harmless and indemnify Customer and the United States, and the respective Contractors and Subcontractors of each, for Bodily Injury or Property Damage sustained by their own employees, resulting from Licensed Launch Activities, regardless of fault.

(b) Customer shall extend the requirements of the waiver and release of claims, and the assumption of responsibility, hold harmless, and indemnification, as set forth in paragraphs 2(b) and 3(a), respectively, to its Contractors and Subcontractors by requiring them to waive and release all claims they may have against Licensee and the United States, and against the respective Contractors and Subcontractors of each, and to agree to be responsible, for Property Damage they sustain and to be responsible, hold harmless and indemnify Licensee and the United States, and the respective Contractors and Subcontractors of each, for Bodily Injury or Property Damage sustained by their own employees, resulting from Licensed Launch Activities, regardless of fault.

(c) The United States shall extend the requirements of the waiver and release of claims, and the assumption of responsibility as set forth in paragraphs 2(c) and 3(b), respectively, to its Contractors and Subcontractors by requiring them to waive and release all claims they may have against Licensee and Customer, and against the respective Contractors and Subcontractors of each, and to agree to be responsible, for any Property Damage they sustain and for any Bodily Injury or Property Damage sustained by their own employees, resulting from Licensed Launch Activities, regardless of fault, to the extent that claims they would otherwise have for such damage or injury exceed the amount of insurance or demonstration of financial responsibility required under section 440.9(c) and (e), respectively, of the Regulations, 14 CFR 440.9(c) and (e).

5. INDEMNIFICATION

(a) Licensee shall hold harmless and indemnify Customer and its directors, officers, servants, agents, subsidiaries, employees and assignees, or any or them, and the United States and its agencies, servants, agents, subsidiaries, employees and assignees, or any or them, from and against liability, loss or damage arising out of claims that Licensee's Contractors and Subcontractors may have for Property Damage sustained by them and for Bodily Injury or Property Damage sustained by their employees, resulting from Licensed Launch Activities.

(b) Customer shall hold harmless and indemnify Licensee and its directors, officers, servants, agents, subsidiaries, employees and assignees, or any or them, and the United States and its agencies, servants, agents, subsidiaries, employees and assignees, or any of them, from and against liability, loss or damage arising out of claims that Customer's Contractors and Subcontractors, or any person on whose behalf Customer enters into this Agreement, may have for Property Damage sustained by them and for Bodily Injury or Property Damage sustained by their employees, resulting from Licensed Launch Activities.

(c) To the extent provided in advance in an appropriations law or to the extent there is enacted additional legislative authority providing for the payment of claims, the United States shall hold harmless and indemnify Licensee and Customer and their respective directors, officers, servants, agents, subsidiaries, employees and assignees, or any of them, from and against liability, loss or damage arising out of claims that Contractors and Subcontractors of the United States may have for Property Damage sustained by them, and for Bodily Injury or Property Damage sustained by their employees, resulting from Licensed Launch Activities, to the extent that claims they would otherwise have for such damage or injury exceed the amount of insurance or demonstration of financial responsibility required under sections 440.9(c) and (e), respectively, of the Regulations, 14 CFR 440.9(c) and (e).

6. ASSURANCES UNDER 49 U.S.C. 70112(E)

Notwithstanding any provision of this Agreement to the contrary, Licensee shall hold harmless and indemnify the United States and its agencies, servants, agents, employees and assignees, or any of them, from and against liability, loss or damage arising out of claims for Bodily Injury or Property Damage, resulting from Licensed Launch Activities, regardless of fault, except to the extent that: (i) as provided in section 7(b) of this Agreement, claims result from willful misconduct of the United States or its agents; (ii) claims for Property Damage sustained by the United States or its Contractors and Subcontractors exceed the amount of insurance or demonstration of financial responsibility required under section 440.9(e) of the Regulations (14 CFR 440.9(e)); (iii) claims by a Third Party for Bodily Injury or Property Damage exceed the amount of insurance or demonstration of financial responsibility required under section 440.9(c) of the Regulations (14 CFR 440.9(c)), and do not exceed $1,500,000,000 (as adjusted for inflation after January 1, 1989) above such amount, and are payable pursuant to the provisions of 49 U.S.C. 70113 and section 440.19 of the Regulations (14 CFR 440.19); or (iv) Licensee has no liability for claims exceeding $1,500,000,000 (as adjusted for inflation after January 1, 1989) above the amount of insurance or demonstration of financial responsibility required under section 440.9(c) of the Regulations (14 CFR 440.9(c)).

7. MISCELLANEOUS

(a) Nothing contained herein shall be construed as a waiver or release by Licensee, Customer or the United States of any claim by an employee of the Licensee, Customer or the United States, respectively, including a member of the Armed Forces of the United States, for Bodily Injury or Property Damage, resulting from Licensed Launch Activities.

(b) Notwithstanding any provision of this Agreement to the contrary, any waiver, release, assumption of responsibility or agreement to hold harmless and indemnify herein shall not apply to claims for Bodily Injury or Property Damage resulting from willful misconduct of any of the Parties, the Contractors and Subcontractors of any of the Parties, and in the case of Licensee and Customer and the Contractors and Subcontractors of each of them, the directors, officers, agents and employees of any of the foregoing, and in the case of the United States, its agents.

(c) In the event that more than one customer is involved in Licensed Launch Activities, references herein to Customer shall apply to, and be deemed to include, each such customer severally and not jointly.

(d) This Agreement shall be governed by and construed in accordance with United States Federal law.

IN WITNESS WHEREOF, the Parties to this Agreement have caused the Agreement to be duly executed by their respective duly authorized representatives as of the date written above.

LICENSEE

By: _____
Its: _____

CUSTOMER

By: _____
Its: _____

DEPARTMENT OF TRANSPORTATION

By: _____
Its: _____

[Doc. No. 28635, 63 FR 45619, Aug. 26, 1998; 63 FR 55175, Oct. 14, 1998]

PARTS 441–449 [RESERVED]

PART 450—FINANCIAL RESPONSIBILITY

Subpart A—Financial Responsibility for Licensed Reentry Activities

Sec.

450.1 Scope of part; basis.
450.3 Definitions.
450.5 General.
450.7 Determination of maximum probable loss.
450.9 Insurance requirements for licensed reentry activities.
450.11 Duration of coverage; modifications.
450.13 Standard conditions of insurance coverage.
450.15 Demonstration of compliance.
450.17 Reciprocal waiver of claims requirements.
450.19 United States payment of excess third-party liability claims.
APPENDIX A TO PART 450—INFORMATION REQUIREMENTS FOR OBTAINING A MAXIMUM PROBABLE LOSS DETERMINATION FOR LICENSED REENTRY ACTIVITIES.
APPENDIX B TO PART 450—AGREEMENT FOR WAIVER OF CLAIMS AND ASSUMPTION OF RESPONSIBILITY.

AUTHORITY: 49 U.S.C. 70101–70121; 49 CFR 1.47.

SOURCE: Docket No. FAA–1999–6265, 65 FR 56699, Sept. 19, 2000, unless otherwise noted.

Subpart A—Financial Responsibility for Licensed Reentry Activities

§450.1 Scope of part; basis.

This part sets forth financial responsibility and allocation of risk requirements applicable to commercial space reentry activities that are authorized to be conducted under a license issued pursuant to this subchapter.

§450.3 Definitions.

(a) For purposes of this part—

Bodily injury means physical injury, sickness, disease, disability, shock, mental anguish, or mental injury sustained by any person, including death.

Contractors and subcontractors means those entities that are involved at any tier, directly or indirectly, in licensed reentry activities, and includes suppliers of property and services, and the component manufacturers of a reentry vehicle or payload. Contractors and subcontractors include those entities as defined in §440.3(a)(2) of this chapter involved in licensed launch activities associated with a particular reentry.

Customer means

(1) A person who procures reentry services from a licensee or launch services associated with a particular reentry;

(2) Any person to whom the customer has sold, leased, assigned or otherwise transferred its rights in the payload (or any part thereof), to be reentered by the licensee, including a conditional sale, lease, assignment, or transfer of rights.

(3) Any person who has placed property on board the payload for reentry or payload services; and

(4) Any person to whom the customer has transferred its rights to reentry services.

Federal range facility means a Government-owned installation at which launches or reentries take place.

Financial responsibility means statutorily required financial ability to satisfy liability as required under 49 U.S.C. 70101–70121.

Government personnel means employees of the United States, its agencies, and its contractors and subcontractors, involved in reentry services for licensed reentry activities or launch services for licensed launch activities associated with a particular reentry. Employees of the United States include members of the Armed Forces of the United States.

Hazardous operations means activities, processes, and procedures that, because of the nature of the equipment, facilities, personnel, or environment involved or function being performed, may result in bodily injury or property damage.

Liability means a legal obligation to pay claims for bodily injury or property damage resulting from licensed reentry activities.

License means an authorization to conduct licensed reentry activities, issued by the Office under this subchapter.

Licensed launch activities means the launch of a launch vehicle as defined in a regulation or license issued by the Office and carried out pursuant to a launch license.

Licensed reentry activities means the reentry of a reentry vehicle, including a reusable launch vehicle (RLV), as defined in a regulation or license issued by the Office and carried out pursuant to a license.

Maximum probable loss (MPL) means the greatest dollar amount of loss for bodily injury or property damage that is reasonably expected to result from licensed reentry activities;

(1) Losses to third parties, excluding Government personnel and other launch or reentry partcipants employees involved in licensed reentry activities, that are reasonably expected to result from licensed reentry activities are those having a probability of occurrence on the order of no less than one in ten million.

(2) Losses to Government property and Government personnel, as defined in this section, that are reasonably expected to result from licensed reentry activities are those having a probability of occurrence on the order of no less than in one hundred thousand.

Office means the Associate Administrator for Commercial Space Transportation of the Federal Aviation Administration, U.S. Department of Transportation.

Property damage means partial or total destruction, impairment, or loss of tangible property, real or personal.

Regulations means the Commercial Space Transportation Licensing Regulations, codified at 14 CFR Ch. III.

Third party means:

(1) Any person other than:

(i) The United States, its agencies, and its contractors and subcontractors involved in reentry services for licensed reentry activities or launch services for licensed launch activities associated with a particular reentry;

(ii) The licensee and its contractors and subcontractors involved in reentry services for licensed reentry activities or launch services for licensed launch activities associated with a particular reentry; and

(iii) The customer and its contractors and subcontractors involved in reentry services for licensed reentry activities or launch services for licensed launch activities associated with a particular reentry.

(2) Government personnel, as defined in this section, are third parties.

United States means the United States Government, including its agencies.

(b) Except as otherwise provided in this section, any term used in this part and defined in 49 U.S.C. 70101–70121 or in § 401.5 of this chapter shall have the meaning contained therein.

[Doc. No. FAA–1999–6265, 65 FR 56699, Sept. 19, 2000; 65 FR 80991, Dec. 22, 2000]

§ 450.5 General.

(a) No person shall commence or conduct reentry activities that require a license unless that person has obtained a license and fully demonstrated compliance with the financial responsibility and allocation of risk requirements set forth in this part.

(b) The Office shall prescribe the amount of financial responsibility a licensee is required to obtain and any additions to or modifications of the amount in a license order issued concurrent with or subsequent to the issuance of a license.

(c) Demonstration of financial responsibility under this part shall not relieve the licensee of ultimate responsibility for liability, loss, or damage sustained by the United States resulting from licensed reentry activities, except to the extent that:

(1) Liability, loss, or damage sustained by the United States results from willful misconduct of the United States or its agents;

(2) Covered claims of third parties for bodily injury or property damage arising out of any particular reentry exceed the amount of financial responsibility required under § 450.9(c) of this part and do not exceed $1,500,000,000 (as adjusted for inflation occurring after January 1, 1989), above such amount, and are payable pursuant to 49 U.S.C. 70113 and § 450.19 of this part. Claims of employees of entities listed in paragraphs (1)(ii) and (iii) of the definition of ''third party'' in § 450.3(a) of this part for bodily injury or property damage are not covered claims;

(3) Covered claims for property loss or damage exceed the amount of financial responsibility required under § 450.9(e) of this part and do not result from willful misconduct of the licensee; or

(4) The licensee has no liability for covered claims by third parties for bodily injury or property damage arising out of any particular reentry that exceed $1,500,000,000 (as adjusted for inflation occurring after January 1, 1989) above the amount of financial responsibility required under § 450.9(c) of this part.

(d) A licensee's failure to comply with the requirements in this part may result in suspension or revocation of a license, and subjects the licensee to civil penalties as provided in part 405 of this chapter.

§ 450.7 Determination of maximum probable loss.

(a) The Office shall determine the maximum probable loss (MPL) from covered claims by a third party for bodily injury or property damage, and the United States, its agencies, and its contractors and subcontractors for covered property damage or loss, resulting from licensed reentry activities. The maximum probable loss determination forms the basis for financial responsibility requirements issued in a license order.

(b) The Office issues its determination of maximum probable loss no later

than ninety days after a licensee or transferee has requested a determination and submitted all information required by the Office to make the determination. The Office shall consult with Federal agencies that are involved in, or whose personnel or property are exposed to risk of damage or loss as a result of, licensed reentry activities before issuing a license order prescribing financial responsibility requirements and shall notify the licensee or transferee if interagency consultation may delay issuance of the MPL determination.

(c) Information requirements for obtaining a maximum probable loss determination are set forth in appendix A to this part. Any person requesting a determination of maximum probable loss must submit information in accordance with Appendix A requirements, unless the Office has waived requirements. In lieu of submitting required information, a person requesting a maximum probable loss determination may designate and certify certain information previously submitted for a prior determination as complete, valid, and equally applicable to its current request. The requester is responsible for the continuing accuracy and completeness of information submitted under this part and shall promptly report any changes in writing.

(d) The Office shall amend a determination of maximum probable loss required under this section at any time prior to completion of licensed reentry activities as warranted by supplementary information provided to or obtained by the Office after the MPL determination is issued. Any change in financial responsibility requirements as a result of an amended MPL determination shall be set forth in a license order.

(e) The Office may make a determination of maximum probable loss at any time other than as set forth in paragraph (b) of this section, upon request by any person.

§450.9 Insurance requirements for licensed reentry activities.

(a) As a condition of each reentry license, the licensee must comply with insurance requirements set forth in this section and in a license order issued by the Office, or otherwise demonstrate the required amount of financial responsibility.

(b) The licensee must obtain and maintain in effect a policy or policies of liability insurance, in an amount determined by the Office under paragraph (c) of this section, that protects the following persons as additional insureds to the extent of their respective potential liabilities against covered claims by a third party for bodily injury or property damage resulting from licensed reentry activities:

(1) The licensee, its customer, and their respective contractors and subcontractors, and the employees of each, involved in licensed reentry activities or in licensed launch activities associated with a particular reentry;

(2) The United States, its agencies, and its contractors and subcontractors involved in licensed reentry activities or in licensed launch activities associated with a particular reentry; and

(3) Government personnel.

(c) The Office shall prescribe for each licensee the amount of insurance required to compensate the total of covered third-party claims for bodily injury or property damage resulting from licensed reentry activities. Covered third-party claims include claims by the United States, its agencies, and its contractors and subcontractors for damage or loss to property other than property for which insurance is required under paragraph (d) of this section. The amount of insurance required is based upon the Office's determination of maximum probable loss; however, it will not exceed the lesser of:

(1) $500 million; or

(2) The maximum liability insurance available on the world market at a reasonable cost, as determined by the Office.

(d) The licensee must obtain and maintain in effect a policy or policies of insurance, in an amount determined by the Office under paragraph (e) of this section, that covers claims by the United States, its agencies, and its contractors and subcontractors involved in licensed reentry activities resulting from licensed reentry activities. Property covered by this insurance must include all property owned,

leased, or occupied by, or within the care, custody, or control of, the United States and its agencies, and its contractors and subcontractors involved in licensed reentry activities, at a Federal range facility. Insurance must protect the United States and its agencies, and its contractors and subcontractors involved in licensed reentry activities.

(e) The Office shall prescribe for each licensee the amount of insurance required to compensate claims for property damage under paragraph (d) of this section resulting from licensed reentry activities in connection with any particular reentry. The amount of insurance is based upon a determination of maximum probable loss; however, it will not exceed the lesser of:

(1) $100 million; or

(2) The maximum available on the world market at a reasonable cost, as determined by the Office.

(f) In lieu of a policy of insurance, a licensee may demonstrate financial responsibility in another manner meeting the terms and conditions applicable to insurance as set forth in this part. The licensee must describe in detail the method proposed for demonstrating financial responsibility and how it assures that the licensee is able to cover claims as required under this part.

[Doc. No. FAA–1999–6265, 65 FR 56699, Sept. 19, 2000; 65 FR 80991, Dec. 22, 2000]

§ 450.11 Duration of coverage; modifications.

(a) Insurance coverage required under § 450.9, or other form of financial responsibility, shall attach upon commencement of licensed reentry activities, and remain in full force and effect as follows:

(1) For ground operations, until completion of licensed reentry activities at the reentry site; and

(2) For other licensed reentry activities, thirty days from initiation of reentry flight; however, in the event of an abort that results in the reentry vehicle remaining on orbit, insurance shall remain in place until the Office's determination that risk to third parties and Government property as a result of licensed reentry activities is sufficiently small that financial responsibility is no longer necessary, as determined by the Office through the risk analysis conducted to determine MPL and specified in a license order.

(b) Financial responsibility required under this part may not be replaced, canceled, changed, withdrawn, or in any way modified to reduce the limits of liability or the extent of coverage, nor expire by its own terms, prior to the time specified in a license order, unless the Office is notified at least 30 days in advance and expressly approves the modification.

§ 450.13 Standard conditions of insurance coverage.

(a) Insurance obtained under § 450.9 shall comply with the following terms and conditions of coverage:

(1) Bankruptcy or insolvency of an insured, including any additional insured, shall not relieve the insurer of any of its obligations under any policy.

(2) Policy limits shall apply separately to each occurrence and, for each occurrence to the total of claims arising out of licensed reentry activities in connection with any particular reentry.

(3) Except as provided in this paragraph herein, each policy must pay claims from the first dollar of loss, without regard to any deductible, to the limits of the policy. A licensee may obtain a policy containing a deductible amount if the amount of the deductible is placed in an escrow account or otherwise demonstrated to be unobligated, unencumbered funds of the licensee, available to compensate claims at any time claims may arise.

(4) Each policy shall not be invalidated by any action or inaction of the licensee or any additional insured, including nonpayment by the licensee of the policy premium, and must insure the licensee and each additional insured regardless of any breach or violation of any warranties, declarations, or conditions contained in the policies by the licensee or any additional insured (other than a breach or violation by the licensee or an additional insured, and then only as against that licensee or additional insured).

(5) Exclusions from coverage must be specified.

(6) Insurance shall be primary without right of contribution from any

other insurance that is carried by the licensee or any additional insured.

(7) Each policy must expressly provide that all of its provisions, except the policy limits, operate in the same manner as if there were a separate policy with and covering the licensee and each additional insured.

(8) Each policy must be placed with an insurer of recognized reputation and responsibility that either:

(i) Is licensed to do business in any State, territory, possession of the United States, or the District of Columbia; or

(ii) Includes in each of its policies of insurance obtained under this part a contract clause in which the insurer agrees to submit to the jurisdiction of a court of competent jurisdiction within the United States and designates an authorized agent within the United States for service of legal process on the insurer.

(9) Except as to claims resulting from the willful misconduct of the United States or its agents, the insurer shall waive any and all rights of subrogation against each of the parties protected by required insurance.

(b) [Reserved]

[Doc. No. FAA–1999–6265, 65 FR 56699, Sept. 19, 2000; 65 FR 80991, Dec. 22, 2000]

§450.15 Demonstration of compliance.

(a) A licensee must submit evidence of financial responsibility and compliance with allocation of risk requirements under this part, as follows, unless a license order specifies otherwise due to the proximity of the licensee's intended date for commencement of licensed activities:

(1) The waiver of claims agreement required under §450.17(c) of this part must be submitted at least 30 days before commencement of licensed launch activities involving the reentry licensee;

(2) Evidence of insurance must be submitted at least 30 days before commencement of licensed launch activities involving the reentry licensee;

(3) Evidence of financial responsibility in a form other than insurance, as provided under §450.9(f) of this part, must be submitted at least 60 days before commencement of licensed launch activities involving the reentry licensee; and

(4) Evidence of renewal of insurance or other form of financial responsibility must be submitted at least 30 days in advance of its expiration date.

(b) Upon a complete demonstration of compliance with financial responsibility and allocation of risk requirements under this part, the requirements shall preempt any provisions in agreements between the licensee and an agency of the United States governing access to or use of United States reentry property or reentry services for licensed reentry activities which address financial responsibility, allocation of risk and related matters covered by 49 U.S.C. 70112, 70113.

(c) A licensee must demonstrate compliance as follows:

(1) The licensee must provide proof of insurance required under §450.9 by:

(i) Certifying to the Office that it has obtained insurance in compliance with the requirements of this part and any applicable license order;

(ii) Filing with the Office one or more certificates of insurance evidencing insurance coverage by one or more insurers under a currently effective and properly endorsed policy or policies of insurance, applicable to licensed reentry activities, on terms and conditions and in amounts prescribed under this part, and specifying policy exclusions;

(iii) In the event of any policy exclusions or limitations of coverage that may be considered usual under §450.19(c) of this part, or for purposes of implementing the Government's waiver of claims for property damage under 49 U.S.C. 70112(b)(2), certifying that insurance covering the excluded risks is not commercially available at reasonable cost; and

(iv) Submitting to the Office, for signature by the Department on behalf of the United States Government, the waiver of claims and assumption of responsibility agreement required by §450.17(c) of this part, executed by the licensee and its customer.

(2) Certifications required under this section must be signed by a duly authorized officer of the licensee.

(d) Certificate(s) of insurance required under paragraph (c)(1)(ii) of this

section must be signed by the insurer issuing the policy and accompanied by an opinion of the insurance broker that the insurance obtained by the licensee complies with the specific requirements for insurance set forth in this part and any applicable license order.

(e) The licensee must maintain, and make available for inspection by the Office upon request, all required policies of insurance and other documents necessary to demonstrate compliance with this part.

(f) In the event the licensee demonstrates financial responsibility using means other than insurance, as provided under § 450.9(f) of this part, the licensee must provide proof that it has met the requirements set forth in this part and in a license order issued by the Office.

[Doc. No. FAA–1999–6265, 65 FR 56699, Sept. 19, 2000; 65 FR 80991, Dec. 22, 2000]

§ 450.17 Reciprocal waiver of claims requirements.

(a) As a condition of each reentry license, the licensee shall comply with reciprocal waiver of claims requirements as set forth in this section.

(b) The licensee shall implement reciprocal waivers of claims with its contractors and subcontractors, its customer(s) and the customer's contractors and subcontractors, and the launch licensee and its contractors and subcontractors and customers, under which each party waives and releases claims against the other parties to the waivers and agrees to assume financial responsibility for property damage it sustains and for bodily injury or property damage sustained by its own employees, and to hold harmless and indemnify each other from bodily injury or property damage sustained by its employees, resulting from reentry activities, including licensed launch activities associated with a particular reentry, regardless of fault.

(c) For each licensed reentry in which the U.S. Government, its agencies, or its contractors and subcontractors is involved in licensed reentry activities or licensed launch activities associated with a particular reentry, or where property insurance is required under § 440.9(d) of this subchapter or § 450.9(d), the Federal Aviation Administration of the Department of Transportation, the licensee, and its customer shall enter into a reciprocal waiver of claims agreement in the form set forth in appendix B to this part or the satisfies its requirements.

(d) The reentry licensee and its customer, the launch licensee and its customer, and the Federal Aviation Administration of the Department of Transportation on behalf of the United States and its agencies but only to the extent provided in legislation, must agree in any waiver of claims agreement required under this part to indemnify another party to the agreement from claims by the indemnifying party's contractors and subcontractors arising out of the indemnifying party's failure to implement properly the waiver requirement.

[Doc. No. FAA–1999–6265, 65 FR 56699, Sept. 19, 2000; 65 FR 80991, Dec. 22, 2000]

§ 450.19 United States payment of excess third-party liability claims.

(a) The United States pays successful covered claims (including reasonable expenses of litigation or settlement) of a third party against the licensee, the customer, and the contractors and subcontractors of the licensee and the customer, and the employees of each involved in licensed reentry activities, the licensee, customer and the contractors and subcontractors of each involved in licensed launch activities associated with a particular reentry, and the contractors and subcontractors of the United States and its agencies, and their employees, involved in licensed reentry activities and licensed launch activities associated with a particular reentry, to the extent provided in an appropriation law or other legislative authority providing for payment of claims in accordance with 49 U.S.C. 70113, and to the extent the total amount of such covered claims arising out of any particular reentry:

(1) Exceeds the amount of insurance required under § 450.9(b); and

(2) Is not more than $1,500,000,000 (as adjusted for inflation occurring after January 1, 1989) above that amount.

(b) Payment by the United States under paragraph (a) of this section shall not be made for any part of such

claims for which bodily injury or property damage results from willful misconduct by the party seeking payment.

(c) The United States shall provide for payment of claims by third parties for bodily injury or property damage that are payable under 49 U.S.C. 70113 and not covered by required insurance under §450.9(b), without regard to the limitation under paragraph (a)(1) of this section, because of an insurance policy exclusion that is usual. A policy exclusion is considered usual only if insurance covering the excluded risk is not commercially available at reasonable rates. The licensee must submit a certification in accordance with §450.15(c)(1)(iii) of this part for the United States to cover the claims.

(d) Upon the expiration of the policy period prescribed in accordance with §450.11(a), the United States shall provide for payment of claims that are payable under 49 U.S.C. 70113 from the first dollar of loss up to $1,500,000,000 (as adjusted for inflation occurring after January 1, 1989).

(e) Payment by the United States of excess third-party claims under 49 U.S.C. 70113 shall be subject to:

(1) Prompt notice by the licensee to the Office that the total amount of claims arising out of licensed reentry activities exceeds, or is likely to exceed, the required amount of financial responsibility. For each claim, the notice must specify the nature, cause, and amount of the claim or lawsuit associated with the claim, and the party or parties who may otherwise be liable for payment of the claim;

(2) Participation or assistance in the defense of the claim or lawsuit by the United States, at its election;

(3) Approval by the Office of any settlement, or part of a settlement, to be paid by the United States; and

(4) Approval by Congress of a compensation plan prepared by the Office and submitted by the President.

(f) The Office will:

(1) Prepare a compensation plan outlining the total amount of claims and meeting the requirements set forth in 49 U.S.C. 70113;

(2) Recommend sources of funds to pay the claims; and

(3) Propose legislation as required to implement the plan.

(g) The Office may withhold payment of a claim if it finds that the amount is unreasonable, unless it is the final order of a court that has jurisdiction over the matter.

APPENDIX A TO PART 450—INFORMATION REQUIREMENTS FOR OBTAINING A MAXIMUM PROBABLE LOSS DETERMINATION FOR LICENSED REENTRY ACTIVITIES

Any person requesting a maximum probable loss determination shall submit the following information to the Office, unless the Office has waived a particular information requirement under 14 CFR 450.7(c):

I. GENERAL INFORMATION

A. Reentry mission description.

1. A description of mission parameters, including:

a. Orbital inclination; and

b. Orbit altitudes (apogee and perigee).

c. Reentry trajectories.

2. Reentry flight sequences.

3. Reentry initiation events and time for each event.

4. Nominal landing location, alternative landing sites and contingency abort sites.

5. Identification of landing facilities, (planned date of reentry), and reentry windows.

6. If the applicant has previously been issued a license to conduct reentry activities using the same reentry vehicle to the same reentry (site) facility, a description of any differences planned in the conduct of proposed activities.

B. Reentry Vehicle Description.

1. General description of the reentry vehicle including dimensions.

2. Description of major systems, including safety systems.

3. Description of propulsion system (reentry initiation system) and type of fuel used.

4. Identification of all propellants to be used and their hazard classification under the Hazardous Materials Table, 49 CFR 172.101.

5. Description of hazardous components.

C. Payload.

1. General description of any payload, including type (e.g., telecommunications, remote sensing), propellants, and hazardous components or materials, such as toxic or radioactive substances.

D. Flight Termination System/Flight Safety System.

1. Identification of any flight termination system (FTS) or Flight Safety System (FSS) on the reentry vehicle, including a description of operations and component location on the vehicle.

II. FLIGHT OPERATIONS

A. Identification of reentry site facilities exposed to risk during vehicle reentry and landing.

B. Identification of accident failure scenarios, probability assessments for each, and estimation of risks to Government personnel, individuals not involved in licensed reentry activities, and Government property, due to property damage or bodily injury. The estimation of risks for each scenario shall take into account the number of such individuals at risk as a result of reentry (flight) and landing of a reentry vehicle (on-range, off-range, and down-range) and specific, unique facilities exposed to risk. Scenarios shall cover the range of reentry trajectories for which authorization is sought in the license application.

C. On-orbit risk analysis assessing risks posed by a reentry vehicle to operational satellites during reentry.

D. Reentry risk analysis assessing risks to Government personnel and individuals not involved in licensed reentry activities as a result of inadvertent or random reentry of the launch vehicle or its components.

E. Nominal and 3-sigma dispersed trajectories in one-second intervals, from reentry initiation through landing or impact. (Coordinate system will be specified on a case by case basis)

F. Three-sigma landing or impact dispersion area in downrange (±) and crossrange (±) measured from the nominal, and contingency landing or impact target. The applicant is responsible for including all significant landing or impact dispersion constituents in the computations of landing or impact dispersion areas. The dispersion constituents should include, but not be limited to: variation in orbital position and velocity at the reentry initiation time; variation in re-entry initiation time offsets, either early or late; variation in the bodies' ballistic coefficient; position and velocity variation due to winds; and variations in re-entry retro-maneuvers.

G. Malfunction turn data (tumble, trim) for guided (controllable) vehicles. The malfunction turn data shall include the total angle turned by the velocity vector versus turn duration time at one second interval; the magnitude of the velocity vector versus turn duration time at one second intervals; and an indication on the data where the reentry body will impact the earth, or breakup due to aerodynamic loads. A malfunction turn data set is required for each malfunction time. Malfunction turn start times shall not exceed four-second intervals along the trajectory.

H. Identification of debris casualty areas and the projected number and ballistic coefficient of fragments expected to result from each failure mode during reentry, including random reentry.

III. POST-FLIGHT PROCESSING OPERATIONS

A. General description of post-flight ground operations including overall sequence and location of operations for removal of vehicle and components and processing equipment from the reentry site facility and for handling of hazardous materials, and designation of hazardous operations.

B. Identification of all facilities used in conducting post-flight processing operations.

C. For each hazardous operation:

1. Identification of location where each operation is performed, including each building or facility identified by name or number.

2. Identification of facilities adjacent to location where each operation is performed and exposed to risk, identified by name or number.

3. Maximum number of Government personnel and individuals not involved in licensed reentry activities who may be exposed to risk during each operation. For Government personnel, identification of his or her employer.

4. Identify and provide reentry site facility policies or requirements applicable to the conduct of operations.

[Doc. No. FAA–1999–6265, 65 FR 56699, Sept. 19, 2000; 65 FR 80991, Dec. 22, 2000]

APPENDIX B TO PART 450—AGREEMENT FOR WAIVER OF CLAIMS AND ASSUMPTION OF RESPONSIBILITY

This Agreement is entered into this ____ day of _____, by and among [Licensee] (the ''Licensee''), [Customer] (the ''Customer''), and the Federal Aviation Administration of the Department of Transportation, on behalf of the United States Government (collectively, the ''Parties''), to implement the provisions of § 450.17(c) of the Commercial Space Transportation Licensing Regulations, 14 CFR Ch. III (the ''Regulations'').

In consideration of the mutual releases and promises contained herein, the Parties hereby agree as follows:

1. Definitions

Contractors and Subcontractors means entities described in § 450.3 of the Regulations, 14 CFR 450.3.

Customer means the above-named Customer on behalf of the Customer and any person described in § 450.3 of the Regulations, 14 CFR 450.3.

License means License No. _____ issued on _____, by the Associate Administrator for Commercial Space Transportation, Federal Aviation Administration, Department of Transportation, to the Licensee, including all license orders issued in connection with the License.

Licensee means the Licensee and any transferee of the Licensee under 49 U.S.C. Subtitle IX, ch. 701.

United States means the United States and its agencies involved in Licensed Activities.

Except as otherwise defined herein, terms used in this Agreement and defined in 49 U.S.C. Subtitle IX, ch. 701—Commercial Space Launch Activities, or in the Regulations, shall have the same meaning as contained in 49 U.S.C. Subtitle IX, ch. 701, or the Regulations, respectively.

2. Waiver and Release of Claims

(a) Licensee hereby waives and releases claims it may have against Customer and the United States, and against their respective Contractors and Subcontractors, for Property Damage it sustains and for Bodily Injury or Property Damage sustained by its own employees, resulting from Licensed Activities, regardless of fault.

(b) Customer hereby waives and releases claims it may have against Licensee and the United States, and against their respective Contractors and Subcontractors, for Property Damage it sustains and for Bodily Injury or Property Damage sustained by its own employees, resulting from Licensed Activities, regardless of fault.

(c) The United States hereby waives and releases claims it may have against Licensee and Customer, and against their respective Contractors and Subcontractors, for Property Damage it sustains, and for Bodily Injury or Property Damage sustained by its own employees, resulting from Licensed Activities, regardless of fault, to the extent that claims it would otherwise have for such damage or injury exceed the amount of insurance or demonstration of financial responsibility required under sections 440.9(c) and (e) or sections 450.9(c) and (e), respectively, of the Regulations, 14 CFR 440.9(c) and (e) or 14 CFR 450.9(c) and (e).

3. Assumption of Responsibility

(a) Licensee and Customer shall each be responsible for Property Damage it sustains and for Bodily Injury or Property Damage sustained by its own employees, resulting from Licensed Activities, regardless of fault. Licensee and Customer shall each hold harmless and indemnify each other, the United States, and the Contractors and Subcontractors of each Party, for Bodily Injury or Property Damage sustained by its own employees, resulting from Licensed Activities, regardless of fault.

(b) The United States shall be responsible for Property Damage it sustains, and for Bodily Injury or Property Damage sustained by its own employees, resulting from Licensed Activities, regardless of fault, to the extent that claims it would otherwise have for such damage or injury exceed the amount of insurance or demonstration of financial responsibility required under §§ 440.9(c) and (e) or §§ 450.9(c) and (e), respectively, of the Regulations, 14 CFR 440.9(c) and (e) or 14 CFR 450.9(c) and (e).

4. Extension of Assumption of Responsibility and Waiver

(a) Licensee shall extend the requirements of the waiver and release of claims, and the assumption of responsibility, hold harmless, and indemnification, as set forth in paragraphs 2(a) and 3(a), respectively, to its Contractors and Subcontractors by requiring them to waive and release all claims they may have against Customer and the United States, and against the respective Contractors and Subcontractors of each, and to agree to be responsible, for Property Damage they sustain and to be responsible, hold harmless and indemnify Customer and the United States, and the respective Contractors and Subcontractors of each, for Bodily Injury or Property Damage sustained by their own employees, resulting from Licensed Activities, regardless of fault.

(b) Customer shall extend the requirements of the waiver and release of claims, and the assumption of responsibility, hold harmless,and indemnification, as set forth in paragraphs 2(b) and 3(a), respectively, to its Contractors and Subcontractors by requiring them to waive and release all claims they may have against Licensee and the United States, and against the respective Contractors and Subcontractors of each, and to agree to be responsible, for Property Damage they sustain and to be responsible, hold harmless and indemnify Licensee and the United States, and the respective Contractors and Subcontractors of each, for Bodily Injury or Property Damage sustained by their own employees, resulting from Licensed Activities, regardless of fault.

(c) The United States shall extend the requirements of the waiver and release of claims, and the assumption of responsibility as set forth in paragraphs 2(c) and 3(b), respectively, to its Contractors and Subcontractors by requiring them to waive and release all claims they may have against Licensee and Customer, and against the respective Contractors and Subcontractors of each, and to agree to be responsible, for any Property Damage they sustain and for any Bodily Injury of Property Damage sustained by their own employees, resulting from Licensed Activities, regardless of fault, to the extent that claims they would otherwise have for such damage or injury exceed the amount of insurance or demonstration of financial responsibility required under §§ 440.9(c) and (e) or §§ 450.9(c) and (e), respectively, of the Regulations, 14 CFR 440.9(c) and (e) or 14 CFR 450.9(c) and (e).

5. Indemnification

(a) Licensee shall hold harmless and indemnify Customer and its directors, officers,

servants, agents, subsidiaries, employees and assignees, or any or them, and the United States and its agencies, servants, agents, subsidiaries, employees and assignees, or any or them, from and against liability, loss or damage arising out of claims that Licensee's Contractors and Subcontractors may have for Property Damage sustained by them and for Bodily Injury or Property Damage sustained by their employees, resulting from Licensed Activities.

(b) Customer shall hold harmless and indemnify Licensee and its directors, officers, servants, agents, subsidiaries, employees and assignees, or any of them, and the United States and its agencies, servants, agents, subsidiaries, employees assignees, or any of them, from and against liability, loss or damage arising out of claims that Customer's Contractors and Subcontractors, or any person on whose behalf Customer enters into this Agreement, may have for Property Damage sustained by them and for Bodily Injury or Property Damage sustained by their employees, resulting from Licensed Activities.

(c) To the extent provided in advance in an appropriations law or to the extent there is enacted additional legislative authority providing for the payment of claims, the United States shall hold harmless and indemnify Licensee and Customer and their respective directors, officers, servants, agents, subsidiaries, employees and assignees, or any of them, from and against liability, loss or damage arising out of claims that Contractors and Subcontractors of the United States may have for Property Damage sustained by them, and for Bodily Injury or Property Damage sustained by their employees, resulting from Licensed Activities, to the extent that claims they would otherwise have for such damage or injury exceed the amount of insurance or demonstration of financial responsibility required under §440.9(c) and (e) or §450.9(c) and (e), respectively, of the Regulations, 14 CFR 440.9(c) and (e) or 14 CFR 450.9(c) and (e).

6. Assurances Under 49 U.S.C. 70112(e)

Nothwithstanding any provision of this Agreement to the contrary, Licensee shall hold harmless and indemnify the United States and its agencies, servants, agents, employees and assignees, or any of them, from and against liability, loss or damage arising out of claims for Bodily Injury or Property Damage, resulting from Licensed Launch Activities, regardless of fault, except to the extent that: (i) As provided in section 7(b) of this Agreement, claims result from willful misconduct of the United States or its agents; (ii) claims for Property Damage sustained by the United States or its Contractors and Subcontractors exceed the amount of insurance or demonstration of financial responsibility required under §440.9(e) or §450.9(e) of the Regulations (14 CFR 440.9(e) or 450.9(e)); (iii) claims by a Third Party for Bodily Injury or Property Damage exceed the amount of insurance or demonstration of financial responsibility required under §440.9(c) or §450.9(c) of the Regulations (14 CFR 440.9(c) or 450.9(c)), and do not exceed $1,500,000,000 (as adjusted for inflation after January 1, 1989) above such amount, and are payable pursuant to the provisions of 49 U.S.C. 70113 and §440.19 or §450.19 of the Regulations (14 CFR 440.19 or 450.19); or (iv) Licensee has no liability for claims exceeding $1,500,000,000 (as adjusted for inflation after January 1, 1989) above the amount of insurance or demonstration of financial responsibility required under §440.9(c) or §450.9(c) of the Regulations (14 CFR 440.9(c) or 450.9(c)).

7. Miscellaneous

(a) Nothing contained herein shall be construed as a waiver or release by Licensee, Customer or the United States of any claim by an employee of the Licensee, Customer or the United States, respectively, including a member of the Armed Forces of the United States, for Bodily Injury or Property Damage, resulting form Licensed Activities.

(b) Notwithstanding any provision of this Agreement to the contrary, any waiver, release, assumption of responsibility or agreement to hold harmless and indemnify herein shall not apply to claims for Bodily Injury or Property Damage resulting from willful misconduct of any of the Parties, the Contractors and Subcontractors of any of the Parties, and in the case of Licensee and Customer and the Contractors and Subcontractors of each of them, the directors, officers, agents and employees of any of the foregoing, and in the case of the United States, its agents.

(c) In the event that more than one customer is involved in Licensed Activities, references herein to Customer shall apply to, and be deemed to include, each such customer severally and not jointly.

(d) This Agreement shall be governed by and construed in accordance with United States Federal law.

In Witness Whereof, the Parties to this Agreement have caused the Agreement to be duly executed by their respective duly authorized representatives as of the date written above.

Licensee

By: _____.
Its: _____.

Customer

By: _____.
Its: _____.

Department of Transportation

By: _____.
Its: _____.

[Doc. No. FAA–1999–6265, 65 FR 56699, Sept. 19, 2000; 65 FR 80991, Dec. 22, 2000]

PARTS 451–1199 [RESERVED]